KONICA MINOLTA

# SERVICE MANUAL

# bizhub C368/C308/C258

Function Version 2.0
Date: 2015/09/16

KONICA MINOLTA, INC.

# Table of Contents


Revision List....-1
bizhub C368/C308/C258 Function Version 2.0....-1
A SAFETY AND IMPORTANT WARNING ITEMS....A-1
1. IMPORTANT NOTICE....A-2
2. DESCRIPTION ITEMS FOR DANGER, WARNING AND CAUTION....A-3
2.1 Description items in this Service Manual....A-3
2.2 Description items for safety and important warning items....A-3
3. SAFETY WARNINGS....A-4
3.1 MODIFICATIONS NOT AUTHORIZED BY KONICA MINOLTA, INC....A-4
3.1.1 Actions requiring special attention....A-4
3.2 POWER PLUG SELECTION....A-5
3.2.1 Power Cord Set or Power Plug....A-5
3.3 CHECKPOINTS WHEN PERFORMING ON-SITE SERVICE....A-6
3.3.1 Power Supply....A-7
3.3.2 Installation Requirements....A-11
3.3.3 After Service....A-13
3.4 FUSE....A-18
3.5 Used Batteries Precautions....A-19
3.5.1 ALL Areas....A-19
3.5.2 Germany....A-19
3.5.3 France....A-19
3.5.4 Denmark....A-19
3.5.5 Finland, Sweden....A-19
3.5.6 Norway....A-19
3.6 Laser Safety....A-20
3.6.1 Laser Safety....A-20
3.6.2 Internal Laser Radiation....A-20
3.6.3 Laser Safety Label....A-21
3.6.4 Laser Caution Label....A-22
3.6.5 PRECAUTIONS FOR HANDLING THE LASER EQUIPMENT....A-22
4. WARNING INDICATIONS ON THE MACHINE....A-23
4.1 Warning indications inside the machine....A-23
4.2 Warning indications on the boards....A-24
5. MEASURES TO TAKE IN CASE OF AN ACCIDENT....A-25
B NOTATION OF THE CONTENTS....B-1
1. PRECAUTION ON HANDLING THIS MANUAL....B-1
2. PRODUCT NAME....B-2
3. BRAND NAME....B-3
3.1 TRADEMARKS OF OTHER COMPANIES....B-3
3.2 OWN TRADEMARKS....B-3
4. FEEDING DIRECTION....B-4
C PRODUCT SPECIFICATIONS....C-1
1. bizhub C368/C308/C258....C-1
1.1 Type....C-1
1.2 Function....C-1
1.3 Paper....C-2
1.4 Material....C-3
1.4.1 Specified conditions of field standard yield....C-3
1.5 Print volume....C-4
1.6 Machine specification....C-4
1.7 Operating environment....C-5
1.8 Print function....C-5
1.9 Scan function....C-5
1.10 Note for the Specifications....C-6
2. DF-629....C-7
2.1 Type....C-7
2.2 Function....C-7
2.3 Type of document....C-7
2.4 Particular original....C-7
2.5 Prohibited original....C-8
2.6 Mixed original feed chart....C-8
2.6.1 For metric area....C-8

2.6.2 For inch area....C-8
2.7 Machine specification....C-8
2.8 Operating environment....C-8
2.9 Note for the Specifications....C-9
3. DF-704....C-10
3.1 Type....C-10
3.2 Function....C-10
3.3 Type of document....C-10
3.4 Particular original....C-10
3.5 Prohibited original....C-11
3.6 Mixed original feed chart....C-11
3.6.1 For metric area....C-11
3.6.2 For inch area....C-11
3.7 Machine specification....C-11
3.8 Operating environment....C-11
3.9 Note for the Specifications....C-12
4. PC-210/PC-110....C-13
4.1 Type....C-13
4.2 Paper....C-13
4.3 Machine specification....C-13
4.4 Operating environment....C-13
4.5 Note for the Specifications....C-13
5. PC-410....C-14
5.1 Type....C-14
5.2 Paper....C-14
5.3 Machine specification....C-14
5.4 Operating environment....C-14
5.5 Note for the Specifications....C-14
6. LU-302....C-15
6.1 Type....C-15
6.2 Paper....C-15
6.3 Machine specification....C-15
6.4 Operating environment....C-15
6.5 Note for the Specifications....C-15
7. JS-506....C-16
7.1 Type....C-16
7.2 Function....C-16
7.3 Capacity....C-16
7.4 Offset function....C-16
7.5 Machine specification....C-17
7.6 Operating environment....C-17
7.7 Note for the Specifications....C-17
8. FS-533....C-18
8.1 Type....C-18
8.2 Function....C-18
8.3 Paper process ability....C-18
8.3.1 Non sort/sort/group....C-18
8.3.2 Sort offset/group offset....C-18
8.3.3 Sort staple....C-19
8.4 Machine specification....C-20
8.5 Operating environment....C-20
8.6 Note for the Specifications....C-20
9. PK-519....C-21
9.1 Type....C-21
9.2 Function....C-21
9.3 Paper....C-21
9.4 Machine specification....C-21
9.5 Operating environment....C-21
9.6 Note for the Specifications....C-21
10. FS-534/FS-534SD....C-22
10.1 Type....C-22
10.2 Function....C-22
10.3 Paper process ability....C-22
10.3.1 Non sort/sort/group....C-22
10.3.2 Sort offset/group offset....C-24
10.3.3 Sort staple....C-24
10.3.4 Saddle stitching/folding....C-25
10.3.5 Tri-folding....C-25

10.4 Machine specification....C-26
10.5 Operating environment....C-26
10.6 Note for the Specifications....C-26
11. PK-520....C-27
11.1 Type....C-27
11.2 Functions....C-27
11.3 Paper....C-27
11.4 Machine specification....C-27
11.5 Operating environment....C-27
11.6 Note for the Specifications....C-27
12. CU-101....C-28
12.1 Type....C-28
12.2 Machine specification....C-28
12.3 Operating environment....C-28
12.4 Note for the Specifications....C-28
13. FK-514/FK-515....C-29
13.1 Basic specifications....C-29
13.1.1 General specifications....C-29
13.1.2 Scanning section....C-29
13.1.3 Recording section....C-30
13.1.4 Line connecting section....C-30
13.1.5 Control panel section....C-30
13.2 Functional specification....C-31
13.2.1 Dial functions....C-31
13.2.2 Transmission....C-32
13.2.3 Polling....C-33
13.2.4 Line seizure mode and telephone function....C-33
13.2.5 Message reception and record....C-33
13.2.6 Memory function....C-34
13.2.7 Various communication function....C-34
13.2.8 User lists / reports....C-34
13.2.9 Other user functions....C-35
13.3 Network fax specification....C-35
13.3.1 Internet Fax....C-35
13.3.2 IP Address Fax....C-36
14. i-Option LK-102 v3/104 v3/105 v4/106/107/108/110 v2/111/114/115 v2....C-37
14.1 Available function for i-Option....C-37
14.1.1 List of advanced functions....C-37
14.1.2 Types of advanced functions....C-38
14.1.3 Activation procedures of i-Option....C-38
14.2 Web browser function....C-38
D OVERALL COMPOSITION....D-1
1. SYSTEM CONFIGURATION....D-1
1.1 System configuration....D-1
1.1.1 System front view 1....D-1
1.1.2 System front view 2....D-2
1.2 Optional configuration....D-2
1.2.1 Combination configuration of main body and document options....D-2
1.2.2 Combination configuration of main body and paper feed options....D-2
1.2.3 Combination configuration of main body and post-processing options....D-2
1.2.4 Combination of main body and fax kit....D-2
1.2.5 Combination of main body (scanner section) and heater....D-2
1.2.6 Combination configuration of paper feed options and dehumidifier heater....D-2
2. SECTION CONFIGURATION....D-4
3. PAPER PATH....D-5
4. CONTROL BLOCK DIAGRAM....D-6
5. IMAGE CREATION PROCESS....D-7
6. IMAGE FORMING CONTROL....D-8
7 PROCESS SPEED....D-9
E SERVICE TOOL....E-1
1. bizhub C368/C308/C258....E-1
1.1 Service material list....E-1
1.2 CE tool list....E-1
1.3 Utility tool....E-1

1.3.1 IC card information setting tool of AU-201/AU-201S/AU-202H/OMNIKEY 5427CK (AU-205H)/SCL-010/YSoft card reader....E-1
2. DF-629/DF-704....E-6
2.1 CE tool list....E-6
F PERIODICAL MAINTENANCE....F-1
1. Concept of periodical maintenance....F-1
2. Periodical maintenance items....F-2
2.1 Main unit....F-2
2.1.1 bizhub C368....F-2
2.1.2 bizhub C308....F-2
2.2 Option....F-3
2.2.1 DF-704....F-3
2.2.2 DF-629....F-3
2.2.3 PC-110/PC-410....F-4
2.2.4 PC-210....F-4
2.2.5 FS-534....F-4
2.2.6 FS-534SD....F-4
2.2.7 FS-533....F-5
3. Periodical replacement parts list....F-6
3.1 bizhub C368/C308/C258....F-6
3.2 Option....F-7
3.2.1 DF-704....F-7
3.2.2 DF-629....F-7
3.2.3 PC-110....F-7
3.2.4 PC-210....F-7
3.2.5 PC-410....F-7
3.2.6 LU-302....F-7
3.2.7 FS-534....F-7
3.2.8 FS-534SD....F-8
3.2.9 FS-533....F-8
4. Periodical cleaning parts list....F-9
4.1 Main unit....F-9
4.2 DF-704....F-9
4.3 DF-629....F-9
4.4 FS-534....F-9
4.5 FS-534SD....F-9
4.6 FS-533....F-9
5. Concept of parts life....F-11
5.1 Life value of consumables and parts....F-11
5.2 Details of the life specifications....F-11
5.3 Control causing inhibited printing for one part when an inhibited-printing event occurs in another part....F-11
5.3.1 Outline....F-11
5.3.2 Target parts....F-12
5.3.3 Threshold value....F-12
6. Periodical maintenance procedure bizhub C368/C308/C258....F-13
6.1 Photo conductor section....F-13
6.1.1 Replacing the drum unit....F-13
6.2 Developing section....F-14
6.2.1 Replacing the developing unit....F-14
6.3 Toner supply section....F-15
6.3.1 Replacing the toner cartridge....F-15
6.4 1st transfer section....F-16
6.4.1 Cleaning of the image transfer entrance guide....F-16
6.4.2 Cleaning of the IDC sensor window....F-17
6.4.3 Replacing the transfer belt unit....F-17
6.5 2nd transfer/separation section....F-18
6.5.1 Replacing the transfer roller unit....F-18
6.6 Toner collection section....F-19
6.6.1 Replacing the waste toner box....F-19
6.6.2 Cleaning of the area around the waste toner collecting port....F-20
6.7 Paper feed section....F-20
6.7.1 Replacing the tray 1 feed roller, tray 1 pick-up roller, tray 1 separation roller....F-20
6.7.2 Replacing the tray 2 feed roller, tray 2 pick-up roller, tray 2 separation roller....F-20
6.7.3 Replacing the manual bypass tray feed roller, manual bypass tray separation roller assy....F-21
6.8 Registration section....F-22
6.8.1 Cleaning of the registration roller....F-22
6.9 Fusing section....F-23
6.9.1 Replacing the fusing unit....F-23

6.10 Duplex section....F-24
6.10.1 Cleaning of the duplex transport rollers....F-24
7. Periodical maintenance procedure DF-629....F-25
7.1 Take-up section....F-25
7.1.1 Cleaning of the pick-up roller/feed roller....F-25
7.1.2 Cleaning of the separation roller....F-25
7.1.3 Replacing the paper feed assy....F-26
7.1.4 Replacing the pick-up roller/feed roller....F-26
7.1.5 Replacing the separation roller assy....F-28
7.2 Transport section....F-29
7.2.1 Cleaning of the miscellaneous rolls....F-29
7.2.2 Cleaning of the miscellaneous rollers....F-30
7.3 Scanning section....F-31
7.3.1 Cleaning of the scanning guide....F-31
7.3.2 Cleaning of the reflective sensor section....F-31
8. Periodical maintenance procedure DF-704....F-32
8.1 Take-up section....F-32
8.1.1 Cleaning of the pick-up roller/feed roller....F-32
8.1.2 Cleaning of the separation roller....F-32
8.1.3 Replacing the paper feed assy....F-33
8.1.4 Replacing the pick-up roller/feed roller....F-33
8.1.5 Replacing the separation roller assy....F-35
8.2 Transport section....F-36
8.2.1 Cleaning of the miscellaneous rolls....F-36
8.2.2 Cleaning of the miscellaneous rollers....F-37
8.3 Scanning section....F-39
8.3.1 Cleaning of the front side scanning guide....F-39
8.3.2 Cleaning of the reflective sensor section....F-39
9. Periodical maintenance procedure PC-110/PC-210....F-41
9.1 Paper feed section....F-41
9.1.1 Replacing the tray 3 feed roller, tray 3 pick-up roller, tray 3 separation roller....F-41
9.1.2 Replacing the tray 4 feed roller, tray 4 pick-up roller, tray 4 separation roller....F-41
10. Periodical maintenance procedure PC-410....F-43
10.1 Paper feed section....F-43
10.1.1 Replacing the feed roller, pick-up roller, separation roller....F-43
11. Periodical maintenance procedure LU-302....F-44
11.1 Paper feed section....F-44
11.1.1 Replacing the pick-up roller....F-44
11.1.2 Replacing the feed roller....F-44
11.1.3 Replacing the separation roller....F-45
12. Periodical maintenance procedure FS-534/FS-534SD....F-46
12.1 Paper exit section....F-46
12.1.1 Cleaning procedure for each rollers/each rolls....F-46
12.1.2 Cleaning the paddles....F-46
12.1.3 Replacing the paddle units....F-46
12.1.4 Cleaning procedure for each rollers/each rolls....F-48
12.1.5 Cleaning the upper paddle....F-48
12.1.6 Cleaning the lower paddle....F-49
12.1.7 Replacing the upper paddle assy....F-49
12.1.8 Replacing the lower paddle unit....F-50
13. Periodical maintenance procedure FS-533....F-52
13.1 Paper exit section....F-52
13.1.1 Cleaning procedure for each parts....F-52
13.1.2 Cleaning the paper exit paddle....F-52
13.2 Alignment section....F-52
13.2.1 Replacing the alignment roller assy F/R....F-52
G DISASSEMBLY/REASSEMBLY....G-1
1. Disassembly/adjustment prohibited items....G-1
1.1 Paint-locked screws....G-1
1.2 Red-painted screws....G-1
1.3 Variable resistors on board....G-1
1.4 Warnings for disassembly....G-1
1.5 Warnings / Precautions during setup or transportation....G-1
2. Units from which removing is prohibited....G-3
2.1 CCD board....G-3
2.1.1 Reason for prohibition....G-3
2.2 PH unit....G-3

2.2.1 Reason for prohibition....G-3
2.3 Fusing unit....G-3
2.3.1 Reason for prohibition....G-3
3. Disassembly/assembly warning/caution items....G-4
3.1 Removal/installing of PWBs....G-4
3.2 Use a special screw....G-4
4. Notes when transporting the machine....G-5
4.1 Protective materials....G-5
4.1.1 Protective materials for the photo conductors....G-5
4.1.2 Scanner packing bracket....G-5
5. bizhub C368/C308/C258....G-6
5.1 Disassembly/reassembly parts list....G-6
5.1.1 Exterior parts....G-6
5.1.2 Units....G-6
5.1.3 Boards....G-6
5.1.4 Motors....G-7
5.1.5 Clutches....G-7
5.1.6 Fan....G-7
5.1.7 etc....G-7
5.2 Disassembly/reassembly procedure (Exterior parts)....G-8
5.2.1 Scanner rear cover....G-8
5.2.2 Scanner right cover....G-8
5.2.3 Scanner front cover....G-8
5.2.4 Scanner left cover....G-9
5.2.5 Scanner upper rear cover....G-9
5.2.6 Control panel left cover/1....G-9
5.2.7 Control panel left cover/2....G-9
5.2.8 Control panel right cover....G-9
5.2.9 Control panel upper cover....G-10
5.2.10 Control panel front cover....G-10
5.2.11 Control panel unit....G-11
5.2.12 Original glass....G-13
5.2.13 Front door....G-14
5.2.14 Front lower cover....G-14
5.2.15 Front cover....G-14
5.2.16 Left cover....G-15
5.2.17 Exit tray....G-15
5.2.18 Rear right cover....G-15
5.2.19 Upper right cover....G-16
5.2.20 Lower rear cover....G-17
5.2.21 Protective sheet....G-17
5.2.22 Upper rear cover....G-17
5.2.23 Tray 1....G-18
5.2.24 Tray 2....G-18
5.3 Disassembly/reassembly procedure (Units)....G-19
5.3.1 LED exposure unit....G-19
5.3.2 Paper feed unit....G-20
5.3.3 PH unit....G-21
5.3.4 Sub hopper unit....G-22
5.3.5 Right door unit....G-23
5.3.6 Manual bypass tray unit....G-24
5.3.7 Regist unit....G-26
5.3.8 Hard disk (A)....G-27
5.3.9 How to open the PWB box....G-28
5.3.10 Main drive unit....G-29
5.3.11 Transport unit....G-32
5.3.12 Fusing drive unit....G-33
5.3.13 Hopper drive unit....G-36
5.4 Disassembly/reassembly procedure (Boards)....G-38
5.4.1 CCD board (CCDB)....G-38
5.4.2 Tray 1 CD paper size board (CDPSB/1), tray 2 CD paper size board (CDPSB/2)....G-40
5.4.3 DC power supply (DCPU)....G-41
5.4.4 EEPROM/1, EEPROM/2....G-42
5.4.5 eMMC board (eMMC)....G-44
5.4.6 Tray 1 FD paper size board (FDPSB/1), tray 2 FD paper size board (FDPSB/2)....G-44
5.4.7 Front side board (FRB)....G-45
5.4.8 High voltage unit (HV)....G-45
5.4.9 Machine condition monitor board (MCMB)....G-46
5.4.10 MFP board (MFPB)....G-47
5.4.11 Tray 1 empty indicator board (PEIB/1), tray 2 empty indicator board (PEIB/2)....G-49

5.4.12 PH relay board (PHRYB)....G-50
5.4.13 Scanner drive board (SCDB)....G-50
5.5 Disassembly/reassembly procedure (Motors)....G-50
5.5.1 Transport motor (M1)....G-50
5.5.2 PC motor (M2)....G-51
5.5.3 Fusing motor (M3)....G-51
5.5.4 Reverse motor (M4)....G-52
5.5.5 ADU transport motor (M5)....G-53
5.5.6 Toner supply motor/K (M6)....G-55
5.5.7 Toner supply motor/C (M7)....G-55
5.5.8 Toner supply motor/M (M8)....G-55
5.5.9 Toner supply motor/Y (M9)....G-56
5.5.10 Toner cartridge motor/Y,M,C (M10)....G-56
5.5.11 Fusing pressure motor (M11)....G-57
5.5.12 Tray 1 lift-up motor (M12)....G-57
5.5.13 Tray 2 lift-up motor (M13)....G-57
5.5.14 Developing motor (M21)....G-57
5.5.15 Toner cartridge motor/K (M25)....G-58
5.5.16 Scanner motor (M201)....G-58
5.6 Disassembly/reassembly procedure (Clutches)....G-60
5.6.1 Tray 2 paper feed clutch (CL1)....G-60
5.6.2 Tray 2 vertical transport clutch (CL2)....G-61
5.6.3 Tray 1 paper feed clutch (CL3)....G-62
5.6.4 Registration clutch (CL4)....G-62
5.6.5 1st transfer pressure clutch (CL5)....G-63
5.6.6 ADU transport clutch (CL6)....G-63
5.6.7 Bypass paper feed clutch (CL7)....G-66
5.6.8 Paper exit clutch (CL8)....G-66
5.7 Disassembly/reassembly procedure (Fans)....G-67
5.7.1 Power supply cooling fan (FM1)....G-67
5.7.2 Transfer belt cleaner cooling fan (FM2)....G-68
5.7.3 Machine rear side cooling fan (FM3)....G-69
5.7.4 Toner cartridge cooling fan (FM4)....G-70
5.7.5 Paper cooling fan (FM8)....G-70
5.8 Disassembly/reassembly procedure (etc.)....G-71
5.8.1 Bypass pick-up solenoid (SD1)....G-71
5.8.2 IDC sensor shutter solenoid (SD2)....G-72
5.8.3 Gate switch solenoid (SD3)....G-73
5.8.4 Developing solenoid (SD4)....G-74
5.8.5 FAX speaker (SP1)....G-75
5.8.6 Bypass CD paper size VR (VR1)....G-77
5.8.7 UFP filter/ Deodorant filter....G-79
6. Option....G-83
6.1 Disassembly/reassembly parts list....G-83
6.1.1 DF-629....G-83
6.1.2 DF-704....G-83
6.1.3 PC-110/PC-210....G-83
6.1.4 PC-410....G-84
6.1.5 LU-302....G-84
6.1.6 JS-506....G-84
6.1.7 FS-533....G-84
6.1.8 PK-519....G-85
6.1.9 FS-534/FS-534SD....G-85
6.1.10 SD-511....G-86
6.1.11 PK-520....G-86
6.1.12 SC-508....G-86
6.1.13 UK-211....G-86
6.1.14 UK-212....G-86
6.1.15 FK-515....G-86
6.1.16 FK-514....G-86
6.1.17 HD-524....G-86
6.1.18 CU-101....G-87
6.1.19 KP-101....G-87
6.2 Disassembly/reassembly procedure (DF-629/SP-501)....G-87
6.2.1 Front cover (DF-629)....G-87
6.2.2 Rear cover (DF-629)....G-87
6.2.3 Left cover unit (DF-629)....G-88
6.2.4 Reverse automatic document feeder (DF-629)....G-89
6.2.5 Glass cleaning roller unit (DF-629)....G-90
6.2.6 DF control board (DFCB) (DF-629)....G-91

6.2.7 Document width size sensor (VR1) (DF-629)....G-92
6.2.8 Document reading motor (M1) (DF-629)....G-93
6.2.9 Document feed motor (M2) (DF-629)....G-93
6.2.10 Registration motor (M3) (DF-629)....G-94
6.2.11 Glass cleaning motor (M4) (DF-629)....G-95
6.2.12 Reading roll release motor (M5) (DF-629)....G-95
6.2.13 DF cooling fan motor (FM1) (DF-629)....G-96
6.2.14 Document exit roller release solenoid (SD1) (DF-629)....G-96
6.2.15 Stamp unit (SP-501)....G-98
6.2.16 Stamp (SP-501)....G-98
6.3 Disassembly/reassembly procedure (DF-704/SP-501)....G-99
6.3.1 Front cover (DF-704)....G-99
6.3.2 Rear cover (DF-704)....G-99
6.3.3 Left cover unit (DF-704)....G-100
6.3.4 Dual scan document feeder (DF-704)....G-101
6.3.5 Front side glass cleaning roller unit (DF-704)....G-103
6.3.6 Back side glass cleaning roller unit (DF-704)....G-104
6.3.7 CIS module (CIS) (DF-704)....G-106
6.3.8 DF control board (DFCB) (DF-704)....G-108
6.3.9 Document width size sensor (VR1) (DF-704)....G-108
6.3.10 CIS power supply (CISPU) (DF-704)....G-109
6.3.11 Dual scan board (DSIPB) (DF-704)....G-110
6.3.12 Document reading motor (M1) (DF-704)....G-110
6.3.13 Document feed motor (M2) (DF-704)....G-111
6.3.14 Registration motor (M3) (DF-704)....G-112
6.3.15 Reading roller release motor (M4) (DF-704)....G-112
6.3.16 CIS cleaning motor (M5) (DF-704)....G-114
6.3.17 Document reading glass cleaning motor (M6) (DF-704)....G-114
6.3.18 DF cooling fan motor (FM1) (DF-704)....G-114
6.3.19 CIS cable (DF-704)....G-115
6.3.20 Stamp unit (SP-501)....G-115
6.3.21 Stamp (SP-501)....G-116
6.4 Disassembly/reassembly procedure (PC-110/PC-210)....G-117
6.4.1 Right door (PC-110/PC-210)....G-117
6.4.2 Rear right cover (PC-110/PC-210)....G-118
6.4.3 Rear cover (PC-110/PC-210)....G-118
6.4.4 Tray 3, tray 4 (PC-110/PC-210)....G-118
6.4.5 Paper feed cabinet (PC-110/PC-210)....G-119
6.4.6 Tray 3 paper feed unit (PC-110/PC-210)....G-120
6.4.7 Tray 4 paper feed unit (PC-210)....G-121
6.4.8 PC control board (PCCB) (PC-110/PC-210)....G-121
6.4.9 Tray 3 paper empty indicator board (PEIB/3), tray 4 paper empty indicator board (PEIB/4) (PC-110/PC-210)....G-121
6.4.10 Tray 3 FD paper size board (FDPSB/3), tray 4 FD paper size board (FDPSB/4) (PC-110/PC-210)....G-122
6.4.11 Tray 3 CD paper size board (CDPSB/3) (PC-110/PC-210)....G-122
6.4.12 Tray 4 CD paper size board (CDPSB/4) (PC-210)....G-123
6.4.13 Tray 3 paper feed motor (M111), tray 4 paper feed motor (M121) (PC-110/PC-210)....G-124
6.4.14 Tray 3 vertical transport motor (M112), tray 4 vertical transport motor (M122) (PC-110/PC-210)....G-124
6.4.15 Tray 3 lift-up motor (M113), tray 4 lift-up motor (M123) (PC-110/PC-210)....G-125
6.5 Disassembly/reassembly procedure (PC-410)....G-125
6.5.1 Right door (PC-410)....G-125
6.5.2 Rear right cover (PC-410)....G-125
6.5.3 Rear cover (PC-410)....G-125
6.5.4 Paper feed tray (PC-410)....G-126
6.5.5 Paper feed cabinet (PC-410)....G-126
6.5.6 Paper feed unit (PC-410)....G-127
6.5.7 PC control board (PCCB) (PC-410)....G-128
6.5.8 Tray 3 paper empty indicator board (PEIB/3) (PC-410)....G-128
6.5.9 Paper feed motor (M131) (PC-410)....G-128
6.5.10 Vertical transport motor (M132) (PC-410)....G-129
6.5.11 Elevator motor (M134) (PC-410)....G-129
6.5.12 Shifter motor (M133) (PC-410)....G-130
6.5.13 Wire (PC-410)....G-130
6.6 Disassembly/reassembly procedure (LU-302)....G-133
6.6.1 Large capacity unit (LU-302)....G-133
6.6.2 Upper door (LU-302)....G-134
6.6.3 Right cover (LU-302)....G-135
6.6.4 Front cover (LU-302)....G-135
6.6.5 Rear cover (LU-302)....G-135
6.6.6 Feed cover (LU-302)....G-136
6.6.7 Lift wire (LU-302)....G-136

6.6.8 LU drive board (LUDB) (LU-302)....G-145
6.6.9 Lift-up motor (M1) (LU-302)....G-145
6.6.10 Dehumidification heater (DH) (LU-302)....G-145
6.7 Disassembly/reassembly procedure (JS-506)....G-146
6.7.1 Exit tray 1 (JS-506)....G-146
6.7.2 Exit tray 2 (JS-506)....G-146
6.7.3 Job separator (JS-506)....G-147
6.7.4 Sensor unit (JS-506)....G-148
6.7.5 JS control board (JSCB) (JS-506)....G-148
6.7.6 Tray shift motor (M1) (JS-506)....G-148
6.8 Disassembly/reassembly procedure (FS-533)....G-149
6.8.1 Front cover (FS-533)....G-149
6.8.2 Upper cover (FS-533)....G-150
6.8.3 Upper cover (FS-533)....G-150
6.8.4 Finisher (FS-533)....G-151
6.8.5 Stapler unit (FS-533)....G-152
6.8.6 Paper exit tray unit (FS-533)....G-153
6.8.7 FS control board (FSCB) (FS-533)....G-153
6.8.8 Stapler relay board (STREYB) (FS-533)....G-154
6.8.9 Paper conveyance motor (M101) (FS-533)....G-154
6.8.10 Paper exit motor (M102) (FS-533)....G-155
6.8.11 Alignment roller motor (M103) (FS-533)....G-155
6.8.12 Exit roller lift up motor (M104) (FS-533)....G-155
6.8.13 Alignment motor/F (M105), Alignment motor/R (M106) (FS-533)....G-156
6.8.14 Stapler movement motor (M107) (FS-533)....G-157
6.8.15 Tray lift up motor (M109) (FS-533)....G-157
6.8.16 Paper surface detect solenoid (SD101) (FS-533)....G-158
6.8.17 Batch solenoid (SD102) (FS-533)....G-160
6.8.18 Paper exit roller solenoid (SD103) (FS-533)....G-160
6.8.19 Paper exit paddle (FS-533)....G-161
6.9 Disassembly/reassembly procedure (PK-519)....G-161
6.9.1 Punch kit (PK-519)....G-161
6.9.2 PK control board (PKCB) (PK-519)....G-162
6.9.3 Punch motor (M201) (PK-519)....G-162
6.10 Disassembly/reassembly procedure (FS-534/FS-534SD/RU-513)....G-163
6.10.1 Rear cover (FS-534/FS-534SD)....G-163
6.10.2 Front door (FS-534/FS-534SD)....G-164
6.10.3 Front upper cover (FS-534/FS-534SD)....G-164
6.10.4 Left lower cover (FS-534/FS-534SD)....G-164
6.10.5 Front lower cover (FS-534/FS-534SD)....G-165
6.10.6 Finisher (FS-534/FS-534SD)....G-165
6.10.7 Relay unit (RU-513)....G-166
6.10.8 Stapler unit (FS-534/FS-534SD)....G-166
6.10.9 Sensor unit (FS-534/FS-534SD)....G-169
6.10.10 Saddle unit (FS-534SD)....G-170
6.10.11 FS control board (FSCB) (FS-534/FS-534SD)....G-174
6.10.12 RU transport motor (M1) (RU-513)....G-174
6.10.13 FNS entry transport motor (M2) (FS-534/FS-534SD)....G-175
6.10.14 FNS discharge motor (M3) (FS-534/FS-534SD)....G-176
6.10.15 Receiving roller retraction motor (M4) (FS-534/FS-534SD)....G-176
6.10.16 FNS paddle motor (M5) (FS-534/FS-534SD)....G-176
6.10.17 Trailing edge stopper motor (M6) (FS-534/FS-534SD)....G-177
6.10.18 Alignment motor/front (M7) (FS-534/FS-534SD)....G-177
6.10.19 Alignment motor/rear (M8) (FS-534/FS-534SD)....G-178
6.10.20 Pre-eject drive motor (M9) (FS-534/FS-534SD)....G-178
6.10.21 Bundle eject motor (M10) (FS-534/FS-534SD)....G-180
6.10.22 Main tray up/down motor (M11) (FS-534/FS-534SD)....G-181
6.10.23 Paper receiving control motor (M12) (FS-534/FS-534SD)....G-182
6.10.24 Side stapler movement motor (M13) (FS-534/FS-534SD)....G-182
6.11 Disassembly/reassembly procedure (SD-511)....G-183
6.11.1 Front cover (SD-511)....G-183
6.11.2 Paper exit tray (SD-511)....G-183
6.11.3 Staple unit (SD-511)....G-184
6.11.4 SD drive board (SDDB) (SD-511)....G-186
6.11.5 SD transport motor (M1) (SD-511)....G-187
6.11.6 Paper discharge control motor (M2) (SD-511)....G-187
6.11.7 Alignment motor (M3) (SD-511)....G-187
6.11.8 Stopper drive motor (M4) (SD-511)....G-188
6.11.9 Center fold roller motor (M5) (SD-511)....G-188
6.11.10 Tri-folding guide motor (M6) (SD-511)....G-189

6.11.11 SD paddle motor (M7) (SD-511)....G-189
6.11.12 Center fold guide motor (M8) (SD-511)....G-190
6.11.13 Center fold knife motor (M9) (SD-511)....G-190
6.11.14 Stopper solenoid (SD1) (SD-511)....G-191
6.12 Disassembly/reassembly procedure (PK-520)....G-194
6.12.1 Punch kit (PK-520)....G-194
6.13 Disassembly/reassembly procedure (SC-508)....G-195
6.13.1 DSC board/1 (for front side) (SC-508)....G-195
6.13.2 DSC board/2 (for back side) (SC-508)....G-195
6.14 Disassembly/reassembly procedure (UK-211)....G-195
6.14.1 Upgrade kit (UK-211)....G-195
6.15 Disassembly/reassembly procedure (UK-212)....G-196
6.15.1 Upgrade kit (UK-212)....G-196
6.16 Disassembly/reassembly procedure (FK-515)....G-196
6.16.1 FAX board (line 3), FAX board (line 4) (FK-515)....G-196
6.17 Disassembly/reassembly procedure (FK-514)....G-197
6.17.1 FAX Kit (Line1), FAX Kit (Line2) (FK-511)....G-197
6.17.2 FAX Kit (Line1), FAX Kit (Line2) (FK-514) (with MK-742)....G-199
6.18 Disassembly/reassembly procedure (HD-524)....G-200
6.18.1 Hard disk (B) (HDD-524)....G-200
6.19 Disassembly/reassembly procedure (CU-101)....G-201
6.19.1 Clean unit cover....G-201
6.19.2 Clean unit (CU-101)....G-202
6.19.3 Clean unit drive board (CUDB)....G-202
6.19.4 Exhaust fan/1 (FM14)....G-202
6.19.5 Exhaust fan/2 (FM15)....G-203
6.19.6 Suction fan (FM16)....G-204
6.19.7 Deodorant filter/UFP filter....G-204
6.20 Disassembly/reassembly procedure (KP-101)....G-205
6.20.1 Keypad (KP-101)....G-205
7. COMMERCIALLY AVAILABLE PARTS....G-206
7.1 Installing the key counter....G-206
7.1.1 Configuration....G-206
7.1.2 Procedure....G-206
7.2 Installing the original size sensor/2 (Option)....G-210
H CLEANING/LUBRICATION....H-1
1. bizhub C368/C308/C258....H-1
1.1 Cleaning parts list....H-1
1.2 Lubrication parts list....H-1
1.3 Cleaning procedure....H-1
1.3.1 Image Transfer Belt Unit....H-1
1.3.2 PH window....H-1
1.3.3 Tray 1 feed roller, tray 1 pick-up roller, tray 1 separation roller....H-2
1.3.4 Tray 2 feed roller, tray 2 pick-up roller, tray 2 separation roller....H-2
1.3.5 Tray 2 transport roller....H-2
1.3.6 Manual bypass tray feed roller....H-2
1.3.7 Manual bypass tray separation roller....H-3
1.3.8 Original glass....H-3
1.3.9 Scanner rails....H-3
1.3.10 Mirrors....H-4
1.3.11 Lens....H-4
1.3.12 CCD sensor....H-4
2. Option....H-6
2.1 Cleaning parts list....H-6
2.1.1 DF-704....H-6
2.1.2 PC-110/PC-210....H-6
2.1.3 PC-410....H-6
2.1.4 LU-302....H-6
2.2 Cleaning procedure (DF-704)....H-6
2.2.1 Back side scanning glass....H-6
2.2.2 Back side scanning guide/Back side scanning shading shaft....H-7
2.3 Cleaning procedure (PC-110/PC-210)....H-7
2.3.1 Tray 3 feed roller, tray 3 pick-up roller, tray 3 separation roller....H-7
2.3.2 Tray 4 feed roller, tray 4 pick-up roller, tray 4 separation roller....H-7
2.3.3 Tray 3 vertical transport roller, tray 4 vertical transport roller....H-8
2.4 Cleaning procedure (PC-410)....H-8
2.4.1 Feed roller, Pick-up roller, Separation roller....H-8
2.4.2 Vertical transport roller....H-8
2.5 Cleaning procedure (LU-302)....H-8

2.5.1 Pick-up roller....H-8
2.5.2 Feed roller....H-9
2.5.3 Separation roller....H-9
2.5.4 Duplex transport roller....H-9
I ADJUSTMENT/SETTING....I-1
1. How To Use The Adjustment/Setting Section....I-1
1.1 How to use the adjustment/setting section....I-1
1.2 Advance checks....I-1
2. List of utility mode....I-2
List of utility mode (outline)....I-2
(1) Starting procedure....I-2
(2) Exiting procedure....I-3
2.1 One-Touch/User Box Registration....I-3
2.2 User Settings List....I-4
2.2.1 System Settings....I-5
2.2.2 Custom Display Settings....I-7
2.2.3 Copier Settings....I-8
2.2.4 Scan/Fax Settings....I-11
2.2.5 Fax Settings....I-12
2.2.6 Printer Settings....I-13
2.2.7 Change Password....I-14
2.2.8 Change E-Mail Address....I-14
2.2.9 Register Authentication Information....I-15
2.2.10 Synchronize User Auth. and Account Track....I-15
2.3 Administrator Settings List [1/2]....I-15
Administrator settings outline 1/2....I-15
2.3.1 System Settings....I-16
2.3.2 Administrator/Machine Settings....I-22
2.3.3 One-Touch/User Box Registration....I-22
2.3.4 User Authentication/Account Track....I-23
2.3.5 Network Settings....I-26
2.3.6 Copier Settings....I-31
2.3.7 Printer Settings....I-32
2.3.8 Fax Settings....I-33
2.3.9 System Connection....I-37
2.4 Administrator Settings List [2/2]....I-38
Administrator settings outline 2/2....I-38
2.4.1 Security Settings....I-38
2.4.2 License Settings....I-41
2.4.3 Voice Guidance Settings....I-42
2.4.4 OpenAPI Certification Management Setting....I-42
2.4.5 External Memory Backup....I-42
2.4.6 Remote Access Setting....I-43
2.4.7 Eco Copier Settings....I-43
2.5 Administrator Shortcut Settings....I-43
2.5.1 Administrator Shortcut Settings [1/2]....I-43
2.5.2 Administrator Shortcut Settings [2/2]....I-44
2.6 Check Consumables List....I-44
2.6.1 Check Consumable Life [1/2]....I-44
2.6.2 Check Consumable Life [2/2]....I-45
2.7 Banner Printing....I-45
2.8 My Panel Settings....I-45
2.9 Device Information List....I-45
2.9.1 Device Information [1/2]....I-46
2.9.2 Device Information [2/2]....I-46
2.10 Remote Panel Operation List....I-46
2.11 Supplementary explanation of utility mode....I-46
2.11.1 User Authentication/Account Track-Authentication Device Settings....I-46
2.11.2 Network Settings-Network Fax Settings....I-48
2.11.3 Network Settings-Network I/F Configuration....I-49
2.11.4 Network Settings-Wireless Network Setting....I-49
2.11.5 Network Settings-IWS Settings....I-51
2.11.6 Network Settings - Remote Panel Settings (outline)....I-51
2.11.7 Network Settings - Remote Panel Settings (Server Settings)....I-51
2.11.8 Network Settings - Remote Panel Settings (Client Settings)....I-52
2.11.9 Machine Update Settings - Internet ISW Settings....I-52
2.11.10 Machine Update Settings - Machine Auto Update setting....I-53
2.11.11 Machine Update Settings - HTTP Proxy Settings....I-56
2.11.12 Security Settings - Prohibited Functions When Authentication Error....I-56

2.11.13 Security Settings - Enhanced Security Mode....I-57
2.11.14 Security Settings - HDD Encryption Setting....I-59
2.11.15 Security Settings - Debug Log Encryption Settings....I-59
2.11.16 Security Settings - Image Log Transfer Settings (Type1)....I-60
2.11.17 Security Settings - Image Log Transfer Settings (Type2)....I-60
2.11.18 Security Settings - Driver Password Encryption Setting....I-60
2.11.19 Security Settings - Quick Security Setting - Administrator Password....I-61
2.11.20 Security Settings - Quick Security Setting - Password Rules....I-61
2.11.21 Security Settings - Quick Security Setting - Quick IP Filtering....I-61
2.11.22 Security Settings - Quick Security setting - PSWC Setting....I-62
2.11.23 Security Settings - Quick Security setting - Security Warning Display Setting....I-62
2.11.24 License Settings....I-62
2.11.25 Voice Guidance Settings-Voice Guidance....I-63
2.11.26 External Memory Backup - Import/Export....I-63
2.11.27 Remote Access Setting - Import/Export User Data....I-64
3. ADJUSTMENT ITEM LIST....I-65
3.1 Replace feed roller, pick-up roller, separation roller (tray 1, tray 2)....I-65
3.2 Replace feed roller, separation roller assy (manual bypass tray)....I-65
3.3 Install LCT (Built-in)....I-65
3.4 Replace CCD unit....I-65
3.5 Replace developing unit....I-65
3.6 Replace drum unit....I-65
3.7 Replace transfer belt unit....I-65
3.8 Replace fusing unit....I-65
3.9 Replace PH unit....I-65
3.10 Replace original size detection sensor....I-65
3.11 Replace scanner motor....I-66
3.12 Replace scanner home sensor....I-66
3.13 Replace MFP board....I-66
3.14 Replace eMMC board....I-66
3.15 Replace original glass....I-66
3.16 Replace hard disk....I-66
3.17 Replace control panel unit....I-66
3.18 Replace DF control board (DF-704/DF-629)....I-66
3.19 Add key counter....I-66
3.20 Execute initialize....I-66
3.21 Add an optional device....I-67
3.22 Execute F/W update....I-67
3.23 Add fax board....I-67
3.24 Mount DF-629....I-67
3.25 Mount DF-704....I-67
3.26 Replace CIS module (when DF-704 is mounted)....I-67
4. LIST OF SERVICE MODE....I-68
4.1 List of service mode (outline)....I-68
4.2 List of service mode (detail)....I-69
4.2.1 Machine....I-69
4.2.2 Imaging Process Adjustment....I-70
4.2.3 CS Remote Care....I-71
4.2.4 System 1....I-72
4.2.5 System 2....I-73
4.2.6 Counter....I-75
4.2.7 List Output....I-76
4.2.8 State Confirmation....I-77
4.2.9 Test Mode....I-77
4.2.10 ADF....I-78
4.2.11 FAX....I-79
4.2.12 Finisher....I-79
4.2.13 Network Settings....I-80
4.2.14 Machine Update Setting....I-81
5. SERVICE MODE....I-82
5.1 Starting/Setting/Exiting....I-82
5.1.1 Starting procedure....I-82
5.1.2 Setting procedure....I-82
5.1.3 Exiting procedure....I-83
5.2 Time Zone/Date & Time Input mode....I-83
5.2.1 Use....I-83
5.2.2 Procedure....I-84
5.3 Search....I-84
5.3.1 Use....I-84
5.3.2 Procedure....I-85

5.4 Machine....I-85
5.4.1 Trail Edge Adjust....I-85
5.4.2 Fusing Temperature....I-86
5.4.3 Fusing Transport Speed....I-86
5.4.4 Heater Control Level....I-87
5.4.5 Printer Area....I-87
5.4.6 Scan Area....I-91
5.4.7 Printer Reg. Loop Adj....I-93
5.4.8 Color Registration Adjustment....I-93
5.4.9 Print Head Skew Adj....I-94
5.4.10 LD adjustment....I-95
5.4.11 Manual Bypass Tray Width Adj....I-95
5.4.12 Lead Edge Erase Adjustment....I-96
5.4.13 Non-Image Area Erase Check....I-96
5.4.14 ADF Scan Glass Contamination....I-96
5.4.15 Exhaust Fan Stop Delay....I-97
5.4.16 PPM Control Choice....I-97
5.5 Firmware Version....I-97
5.5.1 Use....I-97
5.5.2 Procedure....I-97
5.6 Imaging Process Adjustment....I-97
5.6.1 Gradation Adjust....I-97
5.6.2 Max Image Density Adj....I-99
5.6.3 TCR Level Setting....I-100
5.6.4 Image Background Adj....I-100
5.6.5 Transfer Voltage Fine Adj....I-100
5.6.6 Image Stabilization....I-101
5.6.7 Thick Paper Density Adjustment....I-102
5.6.8 Paper Separation Adjustment....I-102
5.6.9 Manual Toner Add....I-102
5.6.10 Monochrome Density Adjustment....I-103
5.6.11 Grad/Dev AC Bias V Selection....I-103
5.6.12 Removable Voltage Adjust....I-103
5.6.13 Charge AC Output fine adjustment....I-104
5.7 CS Remote Care (Outlines)....I-104
5.8 Setting up the CS Remote Care....I-105
5.8.1 Using the telephone line modem....I-105
5.8.2 Using the Fax line modem....I-106
5.8.3 Using the E-mail....I-107
5.8.4 When using a WebDAV server in http communication....I-108
5.9 Software SW setting for CS Remote Care....I-109
List of software SW for CS Remote Care....I-109
5.9.1 Input procedure....I-109
5.9.2 List of software SW for CS Remote Care....I-109
5.9.3 SW No. 01....I-110
5.9.4 SW No. 02....I-110
5.9.5 SW No. 03....I-111
5.9.6 SW No. 04....I-111
5.9.7 SW No. 05....I-112
5.9.8 SW No. 06....I-112
5.9.9 SW No. 07....I-112
5.9.10 SW No. 08....I-113
5.9.11 SW No. 09....I-113
5.9.12 SW No. 10....I-113
5.9.13 SW No. 11....I-114
5.9.14 SW No. 12....I-114
5.9.15 SW No. 14....I-114
5.9.16 SW No. 15....I-115
5.9.17 SW No. 18....I-115
5.9.18 SW No. 21....I-115
5.9.19 SW No. 22....I-116
5.9.20 SW No. 23....I-116
5.10 Setup confirmation....I-116
5.11 Calling the maintenance....I-117
5.11.1 When starting the maintenance....I-117
5.11.2 When finishing the maintenance....I-117
5.12 Calling the center from the administrator....I-117
5.13 Checking the transmission log....I-117
5.14 Detail on settings for CS Remote Care....I-117
5.14.1 Maintenance/Default Settings - System Selection....I-117

5.14.2 Maintenance/Default Settings - ID Code....I-117
5.14.3 Maintenance/Default Settings - Detail Setting....I-118
5.14.4 Maintenance/Default Settings - Server Setting (E-Mail1 or E-mail2 is selected.)....I-120
5.14.5 Maintenance/Default Settings - Server Setting (http1 or http2 is selected)....I-123
5.14.6 Product Auth. Settings....I-123
5.14.7 Import/Export Settings....I-124
5.15 System 1....I-125
5.15.1 Marketing Area....I-125
5.15.2 Tel/Fax Number....I-126
5.15.3 Serial Number....I-126
5.15.4 Sleep ON/OFF Choice Setting....I-126
5.15.5 Foolscap Size Setting....I-127
5.15.6 Original Size Detection....I-127
5.15.7 Install Date....I-128
5.15.8 Initialization-Clear All Data....I-128
5.15.9 Initialization-Clear Individual Data....I-128
5.15.10 Initialization-System Error Clear....I-129
5.15.11 Problem Unit Isolation Set....I-129
5.15.12 Post card transfer table....I-130
5.15.13 Warm-up....I-130
5.15.14 Machine State LED Setting....I-131
5.15.15 TP Level....I-131
5.15.16 Burn Prevention Settings....I-132
5.16 System 2....I-132
5.16.1 HDD....I-133
5.16.2 Image Controller Setting....I-133
5.16.3 Option Board Status....I-134
5.16.4 Consumable Life Reminder....I-134
5.16.5 Unit Change....I-134
5.16.6 Software Switch Setting....I-136
5.16.7 CCD Calibration....I-141
5.16.8 LCT (Built-in) Size Settings....I-142
5.16.9 LCT Paper Size Setting....I-142
5.16.10 Paper Reuse Box Setting....I-142
5.16.11 Line Mag Setting....I-142
5.16.12 Data Capture....I-142
5.16.13 Line Detection....I-144
5.16.14 Stamp....I-145
5.16.15 Network Fax Settings....I-145
5.16.16 RX File Change Page Name....I-146
5.16.17 ADF Settings....I-146
5.16.18 Image Stabilization Setting....I-146
5.16.19 User Paper Settings....I-146
5.16.20 Coverage Rate Screen....I-147
5.16.21 JAM Code Display Setting....I-147
5.16.22 Customize Screen....I-147
5.16.23 Install Data....I-148
5.16.24 Local Interface Kit Setting....I-149
5.16.25 CIS Image Adjustment....I-149
5.16.26 Display Eco Index....I-149
5.16.27 Internal Error. Auto Cancel....I-149
5.16.28 Acquiring Settings....I-150
5.16.29 Driver Install....I-150
5.16.30 Application Change Setting....I-150
5.16.31 Custom Pattern....I-150
5.16.32 Maintenance Mode....I-151
5.16.33 Smart Fusing Control....I-152
5.16.34 Cleaning Unit Setting....I-152
5.17 Counter....I-153
5.17.1 Common procedure....I-153
5.17.2 Life....I-153
5.17.3 Service Call....I-154
5.17.4 Section Service Call....I-154
5.17.5 Warning....I-155
5.17.6 Maintenance....I-155
5.17.7 Service Total....I-155
5.17.8 Counter of Each Mode....I-155
5.17.9 Service Call History (Data)....I-155
5.17.10 ADF Paper Pages....I-156
5.17.11 Paper Jam History....I-156

5.17.12 Fax Connection Error....I-156
5.17.13 ADF Scan Glass Contamin. Counter....I-156
5.17.14 Parts Counter (Fixed)....I-156
5.17.15 Jam....I-157
5.17.16 Section JAM....I-157
5.17.17 Instantaneous Power Failure....I-157
5.17.18 Detail code history....I-157
5.18 List Output....I-158
5.18.1 Batch list CSV output....I-158
5.18.2 Machine Management List....I-159
5.18.3 Adjustments List....I-159
5.18.4 Parameter List....I-159
5.18.5 Service Parameter....I-159
5.18.6 Protocol Trace....I-159
5.18.7 Fax Setting List....I-159
5.18.8 Fax Analysis List....I-160
5.19 State Confirmation....I-160
5.19.1 Sensor Check....I-160
5.19.2 Table Number....I-167
5.19.3 Level History 1....I-168
5.19.4 Level History 2....I-168
5.19.5 Temp. & Humidity....I-168
5.19.6 CCD Check....I-168
5.19.7 Memory/Storage Adjustment....I-169
5.19.8 Memory/Storage Status....I-172
5.19.9 Color Regist....I-172
5.19.10 Load Check....I-172
5.19.11 Adjustment Data List....I-176
5.19.12 Self-diagnostic....I-176
5.20 Test Mode....I-180
5.20.1 Procedure for test pattern output....I-180
5.20.2 Gradation Pattern....I-181
5.20.3 Halftone Pattern....I-181
5.20.4 Lattice Pattern....I-182
5.20.5 Solid Pattern....I-182
5.20.6 Color Sample....I-182
5.20.7 8 Color Solid Pattern....I-183
5.20.8 CMM pattern....I-183
5.20.9 Paper Passage Test....I-184
5.20.10 Fax Test-Signal Send Test....I-184
5.20.11 Fax Test-Signal Receive Test....I-185
5.20.12 Fax Test-NCU TEST....I-186
5.20.13 Fax Test-Dial Test....I-187
5.20.14 Fax Test - Off-hook Test....I-187
5.21 ADF....I-187
5.21.1 Original Stop Position....I-187
5.21.2 Registration Loop Adj....I-189
5.21.3 Auto Stop Position Adjustment....I-189
5.21.4 Paper Passage....I-190
5.21.5 Sensor Check....I-191
5.21.6 Original Tray Width....I-192
5.21.7 Read Pos Adj....I-192
5.21.8 Feed Zoom....I-193
5.21.9 Scanning Light Adjustment....I-194
5.21.10 Mixed original size adjustment....I-194
5.21.11 Home Read Position Adjust....I-194
5.21.12 FD-Mag. Adj. (B)....I-195
5.21.13 Main Scanning Direction Zoom....I-195
5.21.14 Skew Measurement....I-196
5.22 FAX (Line1)....I-197
FAX Setting (Line1)....I-197
5.22.1 Modem/NCU....I-197
5.22.2 Network....I-199
5.22.3 System....I-201
5.22.4 Fax File Format....I-204
5.22.5 Communication....I-204
5.22.6 List Output....I-208
5.22.7 Function Parameter....I-209
5.22.8 Initialization....I-209
5.22.9 FAX Line Std. Setting....I-209

5.23 FAX setting (Line2, Line 3, Line 4)....I-210
5.23.1 Modem/NCU....I-211
5.23.2 Network....I-213
5.23.3 Communication....I-215
5.23.4 Initialize....I-217
5.23.5 FAX Line Std. Setting....I-217
5.24 FAX setting (Address parameter list: for line 1, line 2, line 3 and line 4)....I-218
5.24.1 0b000#....I-218
5.24.2 0b001#....I-221
5.24.3 0b002#....I-222
5.24.4 0b003#....I-223
5.24.5 0b004#, 0b005#....I-223
5.24.6 0b006#....I-224
5.24.7 0e000#....I-225
5.24.8 0e001#....I-228
5.24.9 0e002#....I-230
5.24.10 0e003#....I-230
5.24.11 0e004#....I-230
5.24.12 0e005#....I-233
5.24.13 12000#....I-234
5.24.14 13000#....I-238
5.24.15 13001#, 13002#....I-240
5.24.16 13003#....I-240
5.24.17 13004#....I-241
5.24.18 13005#....I-242
5.24.19 13006#....I-242
5.24.20 13007#....I-244
5.24.21 13008#....I-246
5.24.22 98000#....I-246
5.25 FAX setting (Address parameter list: for line 1)....I-247
5.25.1 0e009#....I-247
5.25.2 0e00a#....I-250
5.25.3 0e00b#....I-252
5.25.4 0e00c#....I-255
5.25.5 0e00d#....I-259
5.25.6 0e00e#....I-261
5.25.7 0e00f#....I-264
5.25.8 0e010#....I-266
5.25.9 0e011#....I-268
5.25.10 0e012#....I-269
5.25.11 0f000#....I-270
5.25.12 0f001#....I-272
5.25.13 10000#....I-273
5.25.14 10001#....I-275
5.26 FAX setting (Address parameter list: for line 2)....I-276
5.26.1 0e01a#....I-276
5.26.2 0e01b#....I-279
5.26.3 0e01c#....I-281
5.26.4 0e01d#....I-285
5.26.5 0e01e#....I-288
5.26.6 0e01f#....I-290
5.26.7 0e020#....I-293
5.26.8 0e021#....I-295
5.26.9 0e022#....I-297
5.26.10 0e023#....I-298
5.26.11 0f002#....I-299
5.26.12 0f003#....I-301
5.26.13 10002#....I-302
5.26.14 10003#....I-304
5.27 FAX setting (Address parameter list: for line 3)....I-305
5.27.1 0e02b#....I-305
5.27.2 0e02c#....I-308
5.27.3 0e02d#....I-310
5.27.4 0e02e#....I-314
5.27.5 0e02f#....I-317
5.27.6 0e030#....I-319
5.27.7 0e031#....I-322
5.27.8 0e032#....I-324
5.27.9 0e033#....I-326
5.27.10 0e034#....I-327

5.27.11 0f004#....I-328
5.27.12 0f005#....I-330
5.27.13 10004#....I-331
5.27.14 10005#....I-333
5.28 FAX setting (Address parameter list: for line 4)....I-334
5.28.1 0e03c#....I-334
5.28.2 0e03d#....I-337
5.28.3 0e03e#....I-339
5.28.4 0e03f#....I-343
5.28.5 0e040#....I-346
5.28.6 0e041#....I-348
5.28.7 0e042#....I-351
5.28.8 0e043#....I-353
5.28.9 0e044#....I-355
5.28.10 0e045#....I-356
5.28.11 0f006#....I-357
5.28.12 0f007#....I-359
5.28.13 10006#....I-360
5.28.14 10007#....I-362
5.29 Finisher....I-363
5.29.1 FS-FN adjustment - Center Staple Position....I-363
5.29.2 FS-FN adjustment - Half-Fold Position....I-364
5.29.3 FS-FN adjustment - 1st Tri-Fold Adjustment/2nd Tri-Fold Adjustment....I-365
5.29.4 FS-FN adjustment - Punch Edge Adj....I-366
5.29.5 FS-FN adjustment - Punch Regist Loop Size....I-366
5.29.6 FS-FN adjustment - Finisher Components Test Mode....I-366
5.29.7 FS-FN adjustment - Alignment plate Position....I-367
5.29.8 FS-FN adjustment - Paper Alignment Guides W. Adj....I-368
5.29.9 Punch Option Setting....I-368
5.29.10 Max. # of Folded Sheets Setting....I-368
5.29.11 Job Separator....I-368
5.30 Network Settings....I-369
5.30.1 2nd Network Setting - 2nd network card settings....I-369
5.30.2 2nd Network Setting - Network Interface Settings....I-369
5.30.3 2nd Network Setting - SSID....I-370
5.30.4 2nd Network Setting - Authentication/Encryption Algorithm....I-370
5.30.5 2nd Network Setting - WEP Key....I-370
5.30.6 2nd Network Setting - Passphrase....I-370
5.30.7 2nd Network Setting - Wireless Channel....I-370
5.30.8 2nd Network Setting - ANY Connection....I-371
5.30.9 2nd Network Setting - Connect permission extension address list....I-371
5.30.10 2nd Network Setting - DHCP Server Setting....I-371
5.30.11 2nd Network Setting - TCP/IP Settings....I-371
5.31 Machine Update Setting....I-371
5.31.1 Internet ISW - Internet ISW Set....I-372
5.31.2 Internet ISW - HTTP Setting....I-372
5.31.3 Internet ISW - FTP Setting....I-372
5.31.4 Internet ISW - Forwarding Access Setting....I-373
5.31.5 Internet ISW - Download....I-373
5.31.6 Internet ISW - Update Start Time Settings....I-374
5.31.7 Machine Auto Update setting - Auto Update setting....I-374
5.31.8 Machine Auto Update setting - Relay server setting....I-376
5.31.9 Machine Auto Update setting - Transmission log Update....I-376
5.31.10 Machine Auto Update setting - Transmission Server Log....I-377
5.31.11 Machine Auto Update setting - Update Log Display....I-377
5.31.12 Machine Auto Update setting - Relay Server Log Confirmation....I-377
5.31.13 Machine Auto Update setting - Manual Update....I-377
5.31.14 Machine Auto Update setting - Machine Export setting....I-378
5.31.15 Machine Auto Update setting - Machine Update Password....I-378
5.31.16 Firmware Rollback....I-378
5.31.17 Copy Network Settings....I-379
6. SETUP WIZARD....I-381
6.1 Function outline....I-381
6.1.1 Setup Wizard list....I-381
6.2 Starting/Exiting....I-381
6.2.1 Starting procedure....I-381
6.2.2 Exiting procedure....I-381
7. ENHANCED SECURITY....I-382
7.1 List of Enhanced Security....I-382
7.2 Starting/Exiting....I-382

7.2.1 Starting procedure....I-382
7.2.2 Exiting procedure....I-382
7.3 Enhanced Security....I-383
7.3.1 CE Password....I-383
7.3.2 Administrator Password....I-383
7.3.3 Administrator Feature Level....I-383
7.3.4 CE Authentication....I-384
7.3.5 Life Stop Setting....I-384
7.3.6 Memory Data Backup....I-384
7.3.7 operation Ban release time....I-384
7.3.8 Administrator unlocking....I-384
7.3.9 Engine FW DipSW....I-385
7.3.10 Engine Data Backup....I-390
7.3.11 HDD Data Backup....I-390
7.3.12 TPM Setting....I-391
8. BILLING SETTING....I-392
Billing Setting....I-392
8.1 List of billing setting....I-392
8.2 Starting/Exiting....I-392
8.2.1 Starting procedure....I-392
8.2.2 Exiting procedure....I-393
8.3 BILLING SETTING....I-393
8.3.1 Counter Setting....I-393
8.3.2 Management Function Choice....I-395
8.3.3 Management Function Choice - Key Counter IF Vendor....I-396
8.3.4 Management Function Choice - Key Counter Only....I-396
8.3.5 Management Function Choice - Management Device-2....I-397
8.3.6 Management Function Choice - Vendor 2....I-397
8.3.7 Authentication Device 2....I-398
8.3.8 Setting items that automatically change the setting values....I-400
8.3.9 Coverage Rate Clear....I-402
8.3.10 License management - Activation....I-402
8.3.11 License management - Deactivation....I-406
8.3.12 License management - Repair....I-410
8.3.13 License management - Initialize....I-413
8.3.14 License management - Request Code....I-414
8.3.15 License management - List....I-414
8.3.16 License management - Function List....I-414
8.3.17 Manage OpenAPI Authentication....I-414
8.3.18 WebDAV Server Setting....I-415
8.3.19 Coverage Counter Setting....I-415
8.3.20 Print Counter Clear....I-418
8.3.21 Coverage Counter Detail....I-418
9. Debug Settings....I-420
9.1 List of debug settings....I-420
9.2 Starting/Exiting....I-420
9.2.1 Starting procedure....I-420
9.2.2 Exiting procedure....I-421
9.3 DEBUG SETTINGS....I-421
9.3.1 Debug Log Output....I-421
9.3.2 Acquiring Mode....I-421
9.3.3 TX Debug Log Settings....I-422
9.3.4 Remote Log Retrival....I-423
9.3.5 Remote Log Server Settings....I-424
9.3.6 USB Password....I-424
9.3.7 Other....I-424
9.4 Operation of the debug log function....I-426
9.4.1 Basic mode....I-426
9.4.2 Enhance mode....I-427
10. CONTENTS TO BE CLEARED BY RESET FUNCTION....I-429
11. MECHANICAL ADJUSTMENT bizhub C368/C380/C258....I-430
11.1 Scanner section....I-430
11.1.1 Adjustment of the scanner motor belt....I-430
11.2 Paper feed section....I-430
11.2.1 Centering adjustment of the tray 1/2....I-430
11.2.2 Pick-up pressure adjustment of the tray 1/2....I-431
11.2.3 Separator roller pressure adjustment of the bypass tray....I-432
11.2.4 Adjustment of the bypass CD paper size VR....I-433
11.3 Fusing section....I-434

11.3.1 Adjusting the parallelism of the fusing unit path....I-434
12. MECHANICAL ADJUSTMENT DF-629....I-436
12.1 Original document feed section....I-436
12.1.1 Adjusting the height....I-436
12.1.2 Adjusting front side skew feed on ADF....I-436
12.1.3 Adjusting the pressure of the separation roller....I-438
13. MECHANICAL ADJUSTMENT DF-704....I-440
13.1 Original document feed section....I-440
13.1.1 Adjusting the height....I-440
13.1.2 Adjusting front side skew feed on ADF....I-440
13.1.3 Adjusting back side skew feed on ADF....I-442
13.1.4 Adjusting the pressure of the separation roller....I-443
14. MECHANICAL ADJUSTMENT PC-110/PC-210....I-445
14.1 Paper reference position....I-445
14.1.1 Purpose....I-445
14.1.2 Procedure....I-445
15. MECHANICAL ADJUSTMENT PC-410....I-446
15.1 Paper reference position....I-446
15.1.1 Purpose....I-446
15.1.2 Procedure....I-446
15.2 Shifter movement timing belt adjustment....I-446
15.2.1 Procedure....I-446
16. MECHANICAL ADJUSTMENT LU-302....I-448
16.1 Paper feed section....I-448
16.1.1 Centering adjustment of the LCT....I-448
16.1.2 Pick-up roller load adjustment of the LCT....I-448
17. MECHANICAL ADJUSTMENT PK-519....I-450
17.1 Punch section....I-450
17.1.1 Punch hole deviation correction....I-450
18. MECHANICAL ADJUSTMENT PK-520....I-452
18.1 Punch section....I-452
18.1.1 Punch hole deviation correction....I-452
19. MECHANICAL ADJUSTMENT FS-534SD....I-454
19.1 Paper exit section....I-454
19.1.1 Half-fold skew adjustment....I-454
J REWRITING OF FIRMWARE....J-1
1. Confirming the firmware version....J-2
1.1 Procedure....J-2
2. USB memory....J-3
2.1 Preparation....J-3
2.1.1 System preparation....J-3
2.1.2 USB memory used to update firmware....J-3
2.2 Procedure....J-3
2.3 Action when data transfer fails....J-5
2.4 Entering the machine type information....J-5
3. Internet ISW....J-7
3.1 Preparations for firmware rewriting....J-7
3.1.1 Outline....J-7
3.1.2 Service environment....J-7
3.1.3 Preparations for firmware rewriting....J-7
3.2 Making the firmware data....J-8
3.2.1 Outline....J-8
3.2.2 Procedure....J-8
3.3 Firmware rewriting from the control panel....J-9
3.3.1 Firmware rewriting from the control panel....J-9
4. CS Remote Care....J-12
4.1 Firmware rewriting from the CS Remote Care....J-12
5. Auto Update setting....J-13
5.1 Outline....J-13
5.2 Service environment....J-13
5.3 Procedures for rewriting the firmware by using the Auto Update function....J-13
5.3.1 Preparations....J-13
5.3.2 Download the firmware data automatically from the program server....J-15
6. Firmware Distribute Server function (Relay server)....J-17
6.1 Outline....J-17
6.2 Service environment....J-17

6.3 Firmware relay procedures by using “relay server function”....J-17
6.3.1 Preparations....J-17
6.3.2 Download and open the relay data automatically from the program server....J-17
6.3.3 Download the firmware opened from the relay server by using the Auto Update function on the other MFP....J-18
7. How to install the i-Option data....J-19
7.1 Available function for i-Option....J-19
7.2 LK-107/LK-108 font data installation procedure....J-19
8. Creating back up files when updating firmware....J-20
8.1 Procedure....J-20
K TROUBLESHOOTING....K-1
1. JAM CODE....K-1
(1) JAM display....K-1
(2) Misfeed display resetting procedure....K-1
1.1 List of the JAM code....K-1
1.2 JAM that do not display the JAM code....K-2
1.3 Sensor layout....K-4
1.3.1 bizhub C368/C308/C258....K-4
1.3.2 DF-629....K-4
1.3.3 DF-704....K-5
1.3.4 PC-110/PC-210....K-5
1.3.5 PC-410....K-6
1.3.6 LU-302....K-6
1.3.7 FS-533/PK-519....K-7
1.3.8 FS-534/PK-520/FS-534SD....K-7
1.4 Initial check items....K-8
1.5 Jam when thin or thick paper is fed....K-8
1.5.1 Paper jam for thin paper....K-8
1.5.2 Paper jam for thick paper....K-8
1.6 1#-##....K-8
1.6.1 10-01, 10-02, 10-40....K-8
1.6.2 11-01, 11-02, 11-40....K-9
1.6.3 12-01, 12-40....K-9
1.6.4 13-01, 13-40....K-10
1.6.5 14-01, 14-40....K-10
1.6.6 15-01, 15-40....K-11
1.6.7 16-01, 16-40....K-11
1.6.8 17-20....K-12
1.7 2#-##....K-12
1.7.1 20-01, 20-02....K-12
1.7.2 20-21....K-13
1.7.3 20-22....K-13
1.8 3#-##....K-14
1.8.1 30-03....K-14
1.8.2 32-01, 32-05....K-14
1.9 6#-##....K-15
1.9.1 66-01, 66-11, 66-21....K-15
1.9.2 66-02, 66-12....K-16
1.9.3 66-03, 66-13, 66-23, 66-33....K-16
1.9.4 66-04, 66-14, 66-24, 66-34....K-17
1.9.5 66-05, 66-06, 66-15....K-18
1.9.6 66-07....K-19
1.10 7#-##....K-20
1.10.1 72-14....K-20
1.10.2 72-15....K-20
1.10.3 72-16....K-20
1.10.4 72-17....K-21
1.10.5 72-18....K-22
1.10.6 72-19....K-22
1.10.7 72-21....K-22
1.10.8 72-22....K-23
1.10.9 72-23....K-23
1.10.10 72-25....K-23
1.10.11 72-26....K-24
1.10.12 72-43....K-24
1.10.13 72-70....K-25
1.10.14 72-81....K-25
1.10.15 72-85....K-25
1.10.16 72-86....K-26
1.10.17 72-87....K-26

1.10.18 75-42....K-27
1.10.19 75-43....K-27
1.11 9#-##....K-27
1.11.1 92-01, 92-02, 92-40....K-27
1.11.2 93-10....K-28
1.11.3 99-01....K-28
1.11.4 99-02....K-29
1.11.5 99-03....K-29
1.11.6 99-04....K-29
1.11.7 99-05....K-29
1.11.8 99-06....K-30
1.11.9 99-07....K-30
1.11.10 99-08....K-30
1.11.11 99-09....K-30
2. MALFUNCTION CODE....K-32
2.1 Display procedure....K-32
2.2 List of the malfunction code....K-32
2.3 S-1....K-32
2.3.1 Contents....K-32
2.3.2 Procedure....K-32
2.4 S-2....K-33
2.4.1 Contents....K-33
2.4.2 Procedure....K-33
2.5 D-1....K-33
2.5.1 Contents....K-33
2.5.2 Procedure....K-33
2.6 D-3....K-33
2.6.1 Contents....K-33
2.6.2 Procedure....K-34
2.7 P-5, P-28....K-34
2.7.1 Contents....K-34
2.7.2 Procedure....K-34
2.8 P-6, P-7, P-8, P-9....K-34
2.8.1 Contents....K-34
2.8.2 Procedure....K-34
2.9 P-14....K-35
2.9.1 Contents....K-35
2.9.2 Procedure....K-35
2.10 P-21....K-35
2.10.1 Contents....K-35
2.10.2 Procedure....K-35
2.11 P-22....K-35
2.11.1 Contents....K-35
2.11.2 Procedure....K-36
2.12 P-27....K-36
2.12.1 Contents....K-36
2.12.2 Procedure....K-36
2.13 P-33....K-36
2.13.1 Contents....K-36
2.13.2 Procedure....K-36
3. TROUBLE CODE....K-37
3.1 Display procedure....K-37
3.2 Trouble resetting procedure....K-37
3.2.1 Trouble resetting procedure by Trouble Reset key....K-37
3.2.2 Trouble resetting procedure by the auto cancel function....K-37
3.2.3 Trouble resetting procedure by remote operation....K-38
3.3 Trouble isolation function....K-38
3.4 List of the trouble code....K-38
3.5 C0###....K-45
3.5.1 C0002....K-45
3.5.2 C0106....K-45
3.5.3 C0107....K-46
3.5.4 C0108....K-46
3.5.5 C0109....K-47
3.5.6 C0202....K-47
3.5.7 C0204....K-47
3.5.8 C0206....K-48
3.5.9 C0208....K-48
3.5.10 C0210....K-49
3.5.11 C0211....K-49

3.5.12 C0214 ..... K-50
3.5.13 C0216 ..... K-50
3.6 C1### ..... K-51
3.6.1 C1004 ..... K-51
3.6.2 C1081 ..... K-51
3.6.3 C1102 ..... K-51
3.6.4 C1103 ..... K-52
3.6.5 C1105 ..... K-53
3.6.6 C1106 ..... K-54
3.6.7 C1109 ..... K-55
3.6.8 C1112 ..... K-55
3.6.9 C1113 ..... K-56
3.6.10 C1114 ..... K-56
3.6.11 C1115 ..... K-57
3.6.12 C1132 ..... K-57
3.6.13 C1140 ..... K-58
3.6.14 C1141 ..... K-59
3.6.15 C1144 ..... K-59
3.6.16 C1145 ..... K-60
3.6.17 C1156 ..... K-60
3.6.18 C1182 ..... K-61
3.6.19 C1184 ..... K-61
3.6.20 C1195 ..... K-61
3.6.21 C1196 ..... K-62
3.6.22 C1197 ..... K-62
3.6.23 C11A1 ..... K-63
3.6.24 C11A2 ..... K-63
3.6.25 C11E1 ..... K-63
3.6.26 C1402 ..... K-64
3.7 C2### ..... K-64
3.7.1 C2152, C2153, C2154, C2155, C2156 ..... K-64
3.7.2 C2253, C2254 ..... K-65
3.7.3 C2255, C2256 ..... K-65
3.7.4 C2355 ..... K-66
3.7.5 C2411, C2412, C2413, C2414 ..... K-66
3.7.6 C2551, C2553, C2555 ..... K-66
3.7.7 C2552, C2554, C2556, C2558 ..... K-67
3.7.8 C2557 ..... K-67
3.7.9 C2559, C255A, C255B ..... K-68
3.7.10 C255C ..... K-68
3.7.11 C2561, C2562, C2563, C2564 ..... K-69
3.7.12 C2650 ..... K-69
3.7.13 C2A11, C2A12, C2A13, C2A14 ..... K-70
3.7.14 C2A21, C2A22, C2A23, C2A24 ..... K-70
3.8 C3### ..... K-71
3.8.1 C3101, C3103 ..... K-71
3.8.2 C3201, C3202 ..... K-71
3.8.3 C3302 ..... K-71
3.8.4 C3425 ..... K-72
3.8.5 C3722, C3725, C3726 ..... K-72
3.8.6 C3731 ..... K-73
3.8.7 C3825, C3826 ..... K-73
3.8.8 C3922, C3925, C3926 ..... K-73
3.8.9 C392A ..... K-74
3.8.10 C392B ..... K-74
3.9 C4### ..... K-74
3.9.1 C4091 ..... K-74
3.9.2 C40A1, C40A2, C40A3, C40A4 ..... K-75
3.9.3 C4101 ..... K-75
3.9.4 C4501 ..... K-75
3.10 C5### ..... K-76
3.10.1 C5102, C5103 ..... K-76
3.10.2 C5351 ..... K-76
3.10.3 C5355 ..... K-76
3.10.4 C5360 ..... K-77
3.10.5 C5370 ..... K-77
3.10.6 C5501 ..... K-78
3.10.7 C5601 ..... K-78
3.10.8 C5603 ..... K-78
3.10.9 C5604 ..... K-78

3.10.10 C5605, C5606....K-79
3.10.11 C5610....K-79
3.10.12 C5611....K-79
3.11 C6###....K-80
3.11.1 C6001....K-80
3.11.2 C6002....K-80
3.11.3 C6102, C6103....K-80
3.11.4 C6104, C6105....K-81
3.11.5 C6704....K-81
3.11.6 C6751....K-82
3.11.7 C6752....K-82
3.11.8 C6753....K-82
3.11.9 C6754, C6755....K-83
3.11.10 C6756....K-83
3.11.11 C6901, C6902, C6903....K-83
3.11.12 C6911, C6912, C6913....K-84
3.11.13 C6F01, C6F02, C6F03, C6F04, C6F05, C6F07, C6F08, C6F09, C6F0A, C6FFDC, C6FDD....K-84
3.12 C8###....K-84
3.12.1 C8101....K-84
3.12.2 C8107....K-85
3.12.3 C8302....K-86
3.12.4 C8401....K-86
3.13 C9###....K-87
3.13.1 C9401, C9402....K-87
3.13.2 C9403, C9404....K-87
3.14 CA###....K-88
3.14.1 CA051, CA052, CA053....K-88
3.15 CC###....K-88
3.15.1 CC140....K-88
3.15.2 CC151, CC152....K-88
3.15.3 CC155....K-89
3.15.4 CC156....K-89
3.15.5 CC159, CC15A....K-89
3.15.6 CC15B....K-90
3.15.7 CC15C....K-90
3.15.8 CC163....K-90
3.15.9 CC164....K-90
3.15.10 CC170, CC171, CC172, CC173, CC174, CC180, CC181, CC182, CC183, CC184, CC185, CC186....K-91
3.15.11 CC190....K-91
3.15.12 CC191....K-92
3.15.13 CC211....K-92
3.15.14 CC212....K-92
3.15.15 CC213....K-93
3.15.16 CC214....K-93
3.15.17 CC216....K-93
3.16 CD###....K-94
3.16.1 CD002....K-94
3.16.2 CD004, CD00F, CD020....K-94
3.16.3 CD010....K-94
3.16.4 CD011....K-94
3.16.5 CD012....K-95
3.16.6 CD013, CD014....K-95
3.16.7 CD015....K-95
3.16.8 CD016....K-96
3.16.9 CD017....K-96
3.16.10 CD030....K-96
3.16.11 CD041, CD042, CD043, CD044, CD045, CD046....K-97
3.16.12 CD047, CD048, CD049, CD04A, CD04B....K-97
3.16.13 CD050....K-97
3.16.14 CD110....K-97
3.16.15 CD201, CD202, CD203....K-98
3.16.16 CD211, CD212....K-98
3.16.17 CD241, CD242....K-98
3.16.18 CD252....K-99
3.16.19 CD261....K-99
3.16.20 CD262....K-99
3.16.21 CD271....K-99
3.16.22 CD272....K-100
3.16.23 CD390....K-100
3.16.24 CD391....K-100

3.16.25 CD392....K-100
3.16.26 CD3A0....K-101
3.16.27 CD401, CD402, CD403, CD404, CD405, CD406, CD407, CD411, CD412, CD413....K-101
3.16.28 CD601, CD602, CD603....K-101
3.16.29 CD701, CD702, CD703....K-102
3.16.30 CD704....K-102
3.16.31 CD705, CD706....K-102
3.16.32 CDC##....K-103
3.16.33 CDF50, CDF70, CDFA0....K-103
3.16.34 CDF51, CDF71, CDFA1....K-103
3.17 CE###....K-104
3.17.1 CE001, CE003, CE004, CE005, CE006, CE007....K-104
3.17.2 CE002....K-104
3.17.3 CE101....K-104
3.17.4 CE201....K-105
3.17.5 CE301, CE302, CE303, CE304, CE305....K-105
3.17.6 CED01....K-105
3.17.7 CEEE1, CEEE3....K-105
3.17.8 CEEE2....K-106
4. ABORT CODE....K-107
4.1 Troubleshooting of the abort code....K-107
4.1.1 Contents....K-107
4.1.2 Procedure....K-107
4.2 CF0##....K-107
4.3 CF1##....K-108
4.4 CF2##....K-108
4.5 CF3##....K-108
4.6 CF4##....K-108
4.7 CF5##....K-108
4.8 CF6##....K-108
4.9 CF7##....K-109
4.10 CF8##....K-109
4.11 CF9##....K-109
4.12 CFA##....K-110
4.13 CFB##....K-110
4.13.1 CFB0#....K-110
4.13.2 CFB1#....K-110
4.13.3 CFB2#....K-111
4.13.4 CFB3#....K-111
4.13.5 CFB4#....K-111
4.13.6 CFB5#....K-112
4.13.7 CFB6#....K-112
4.13.8 CFB7#....K-112
4.13.9 CFB8#....K-113
4.13.10 CFB9#....K-113
4.13.11 CFBA#....K-113
4.13.12 CFBB#....K-113
4.13.13 CFBC#....K-114
4.13.14 CFBD#....K-114
4.13.15 CFBE#....K-114
4.13.16 CFBF#....K-115
4.14 CFC##....K-115
4.14.1 CFC0#....K-115
4.14.2 CFC1#....K-115
4.14.3 CFC2#....K-116
4.14.4 CFC3#....K-116
4.14.5 CFC4#....K-117
4.14.6 CFC5#....K-117
4.14.7 CFC6#....K-117
4.14.8 CFC7#....K-118
4.14.9 CFC8#....K-118
4.14.10 CFC9#....K-119
4.14.11 CFCA#....K-119
4.14.12 CFCB#....K-120
4.14.13 CFCC#....K-120
4.14.14 CFCD#....K-121
4.14.15 CFCE#....K-122
4.14.16 CFCF#....K-122
4.15 CFD##....K-122
4.15.1 CFD0#....K-122

4.15.2 CFD1#....K-122
4.15.3 CFD2#....K-123
4.15.4 CFD3#....K-123
4.15.5 CFD4#....K-123
4.15.6 CFD5#....K-124
4.15.7 CFD6#....K-124
4.15.8 CFD7#....K-125
4.15.9 CFD8#....K-125
4.15.10 CFD9#....K-125
4.15.11 CFDA#....K-126
4.15.12 CFDB#....K-126
4.15.13 CFDC#....K-126
4.15.14 CFDD#....K-127
4.15.15 CFDE#....K-127
4.15.16 CFDF#....K-127
4.16 CFE##....K-128
4.16.1 CFE0#....K-128
4.16.2 CFE1#....K-128
4.16.3 CFE2#....K-128
4.16.4 CFE3#....K-129
4.16.5 CFE4#....K-129
4.16.6 CFE5#....K-129
4.16.7 CFE6#....K-130
4.16.8 CFE7#....K-130
4.16.9 CFE8#....K-130
4.16.10 CFE9#....K-131
4.16.11 CFEA#....K-131
4.16.12 CFEB#....K-131
4.16.13 CFEC#....K-132
4.16.14 CFED#....K-132
4.16.15 CFEE#....K-132
4.16.16 CFEF#....K-132
4.17 CFF##....K-133
4.17.1 CFF0#....K-133
4.17.2 CFF1#....K-133
4.17.3 CFF2#....K-133
4.17.4 CFF3#....K-134
4.17.5 CFF4#....K-134
4.17.6 CFF5#....K-134
4.17.7 CFF6#....K-135
4.17.8 CFF7#....K-135
4.17.9 CFF8#....K-135
4.17.10 CFF9#....K-136
4.17.11 CFFA#....K-136
4.17.12 CFFB#....K-136
4.17.13 CFFC#....K-136
4.17.14 CFFD#....K-137
4.17.15 CFFE#....K-137
5. ERROR CODE FOR THE INTERNET ISW....K-138
5.1 Error code list for the Internet ISW....K-138
5.2 0x0#....K-138
5.3 0x1#....K-139
5.4 0x2#....K-139
6. CS Remote Care ERROR CODE....K-140
6.1 Troubleshooting for CS Remote Care....K-140
6.2 CS Remote Care Operation under Enhanced Security Mode....K-140
6.3 List of the CS Remote Care error code....K-140
6.3.1 When connecting by modem....K-140
6.3.2 When connecting by e-mails....K-141
6.3.3 When connecting by http....K-143
6.3.4 When connecting by Fax modem....K-145
7. NETWORK ERROR CODE....K-146
7.1 Display procedure....K-146
7.1.1 IEEE802.1X, E-Mail/Internet Fax, WebDAV client....K-146
7.1.2 Other network error....K-147
7.2 IEEE802.1X....K-147
7.3 LDAP....K-147
7.4 E-Mail/Internet Fax....K-149
7.5 FTP transmission....K-149
7.6 SMB transmission....K-150

7.7 SMTP transmission....K-151
7.8 WebDAV transmission....K-152
7.9 SMB browsing....K-153
7.10 User authentication....K-154
7.11 WebDAV client/Remote panel (Response reception)....K-155
7.12 WebDAV client/Remote panel (Request sending)....K-155
7.13 WSD scan....K-156
7.14 Bluetooth....K-156
7.15 GSS-API....K-156
7.16 Scan server transmission....K-157
7.17 Wireless LAN (WPS)....K-157
7.18 Cloud connection....K-157
8. FAX TROUBLE CODE....K-158
The error in the transmission/reception system....K-158
8.1 B0##....K-158
8.2 B11#....K-158
8.3 B12#....K-158
8.4 B13#....K-159
8.5 B14#....K-159
8.6 B15#....K-159
8.7 B16#....K-159
8.8 B17#....K-159
8.9 B18#....K-160
8.10 B19#....K-160
8.11 T0#....K-160
8.12 T1#....K-161
8.13 T2#....K-161
8.14 T3#....K-161
8.15 T4#....K-161
8.16 T5#....K-162
8.17 T6#....K-162
8.18 T7#....K-162
8.19 T8#....K-162
8.20 T9#....K-163
8.21 R0#....K-163
8.22 R1#....K-163
8.23 R2#....K-164
8.24 R3#....K-164
8.25 R4#....K-164
8.26 R5#....K-165
8.27 R6#....K-165
8.28 R7#....K-165
8.29 R8#....K-165
8.30 R9#....K-166
8.31 Other....K-166
9. DIAGNOSTIC CODES....K-167
9.1 Outline....K-167
9.2 Explanation....K-167
9.2.1 The diagnostic code....K-167
9.2.2 Information of communication results and conditions....K-167
10. NETWORK FAX ERROR CODE....K-168
10.1 Error code list of the transmission system....K-168
10.2 Error code list of the reception system....K-168
11. Open API RELATED TROUBLE....K-170
11.1 Outline....K-170
11.2 Types of Trouble....K-170
11.3 Solution....K-170
11.3.1 When using an application....K-170
11.3.2 After rewriting the firmware of the machine....K-171
12. TROUBLES THAT DO NOT DISPLAY THE TROUBLE CODE....K-172
12.1 Machine is not energized at all (DCPU operation check)....K-172
12.1.1 Contents....K-172
12.1.2 Procedure....K-172
12.2 Fusing heaters do not operate....K-172
12.2.1 Contents....K-172
12.2.2 Procedure....K-172
12.3 Power is not supplied to option....K-172
12.3.1 DF-704/DF-629....K-172
12.3.2 PC-110/PC-210/PC-410....K-173

12.3.3 FS-533/FS-534....K-173
13. OTHER TROUBLE....K-174
13.1 Firmware error warning....K-174
13.1.1 Action....K-174
13.2 HDD lock password error warning....K-174
13.2.1 Detection timing....K-174
13.2.2 Action....K-174
14. TROUBLESHOOTING OF i-Option....K-175
14.1 Structure of license management....K-175
14.2 License management information....K-175
14.3 Error message....K-175
14.3.1 License management error....K-175
15. IMAGE QUALITY PROBLEM....K-176
15.1 How to read element data....K-176
15.1.1 Table Number....K-176
15.1.2 Level History 1....K-177
15.1.3 Level History 2....K-178
15.2 Troubleshooting procedure overview....K-178
15.2.1 Test pattern printing....K-178
15.2.2 Self-diagnostic function....K-179
15.3 Corrective action procedure....K-180
15.3.1 Image trouble sample illustrations....K-180
15.3.2 White line 1, White band 1, Color line 1, Color band 1....K-181
15.3.3 White line 2, White band 2, Color line 2, Color band 2....K-184
15.3.4 Uneven density 1....K-185
15.3.5 Uneven density 2....K-187
15.3.6 Faint image, low image density (ID lowering)....K-188
15.3.7 Gradation reproduction failure....K-190
15.3.8 Color reproducibility error....K-191
15.3.9 Incorrect color image registration....K-192
15.3.10 Foggy background....K-193
15.3.11 Void areas, White spots....K-195
15.3.12 Color spot....K-197
15.3.13 Blurred image....K-198
15.3.14 Back marking....K-200
15.3.15 Blank copy, Black copy....K-200
15.3.16 Uneven pitch....K-202
15.3.17 Uneven gloss, rough gloss....K-203
15.3.18 Poor fusing performance, Offset....K-203
15.3.19 Brush effect, Image bleeding....K-204
15.3.20 Blurred fine lines....K-205
15.3.21 Moire....K-206
15.3.22 Skewed image....K-207
15.3.23 Distorted image....K-208
15.3.24 ACS malfunction....K-208
15.3.25 Abnormal image....K-209
16. IC PROTECTOR....K-210
16.1 Outline....K-210
16.2 IC protector list....K-210
16.2.1 bizhub C368/C308/C258....K-210
16.2.2 PC-410....K-210
16.2.3 JS-506....K-211
16.2.4 FS-534/FS-534SD....K-211
16.2.5 FS-533....K-211
16.2.6 PK-519....K-211
L PARTS/CONNECTOR LAYOUT DRAWING....L-1
1. PARTS LAYOUT DRAWING....L-1
1.1 bizhub C368/C308/C258....L-1
1.1.1 Scanner section....L-1
1.1.2 Front side....L-1
1.1.3 Back side....L-3
1.1.4 Left side....L-5
1.1.5 Right side....L-6
1.1.6 Manual bypass tray....L-7
1.1.7 Tray 1....L-7
1.1.8 Tray 2....L-8
1.1.9 Fusing/paper exit section....L-8
1.1.10 Duplex section....L-9

1.2 DF-704/SP-501 (Option)....L-9
1.3 DF-629/SP-501 (option)....L-11
1.4 PC-110/PC-210 (Option)....L-12
1.4.1 Board/switch/sensor/others....L-12
1.4.2 Load....L-12
1.5 PC-410 (Option)....L-13
1.5.1 Board/switch/sensor/others....L-13
1.5.2 Load....L-13
1.6 LU-302 (Option)....L-14
1.7 JS-506 (Option)....L-14
1.8 FS-534 (Option)....L-15
1.9 PK-520 (Option)....L-16
1.10 SD-511 (Option)....L-17
1.11 FS-533 (Option)....L-18
1.12 PK-519 (Option)....L-19
1.13 CU-101 (Option)....L-19
2. CONNECTOR LAYOUT DRAWING....L-20
2.1 BOARD CONNECTOR LAYOUT DRAWING....L-20
2.1.1 bizhub C368/C308/C258....L-20
2.1.2 DF control board (DFCB)....L-23
2.1.3 Dual scan image processing board (DSIPB)....L-24
2.1.4 CIS power supply (CISPU)....L-24
2.1.5 PC control board (PCCB)....L-25
2.1.6 LU drive board (LUDB)....L-27
2.1.7 JS control board (JSCB)....L-28
2.1.8 FS control board (FSCB)....L-28
2.1.9 SD drive board (SDDB)....L-29
2.1.10 Stapler relay board (STREYB)....L-30
2.1.11 PK control board (PKCB)....L-30
2.1.12 Clean unit drive board (CUDB)....L-30
2.1.13 FAX board (FAXB)....L-31
2.2 RELAY CONNECTOR LAYOUT DRAWING....L-31
2.2.1 bizhub C368/C308/C258....L-31
M TIMING CHART....M-1
1. bizhub C368/C308/C258....M-1
1.1 Timing chart when the main power switch is turned ON....M-1
2. FS-534/SD-511....M-2
2.1 Shift mode....M-2
2.1.1 Operating conditions....M-2
2.1.2 Timing chart....M-2
2.2 Center staples mode....M-2
2.2.1 Operating conditions....M-2
2.2.2 Timing chart....M-2
N WIRING DIAGRAM....N-1
1. bizhub C368/C308/C258....N-1
1.1 Main body....N-1
2. Option....N-3
2.1 DF-629....N-3
2.1.1 DF-629....N-3
2.2 DF-704....N-4
2.2.1 DF-704....N-4
2.3 PC-110....N-5
2.3.1 PC-110....N-5
2.4 PC-210....N-6
2.4.1 PC-210....N-6
2.5 PC-410....N-7
2.5.1 PC-410....N-7
2.6 LU-302....N-8
2.6.1 LU-302....N-8
2.7 FS-533....N-9
2.7.1 FS-533....N-9
2.8 FS-534....N-10
2.9 FS-534SD....N-11
2.10 JS-506....N-12
2.10.1 JS-506....N-12
O THEORY OF OPERATION C368/C308/C258....O-1

1. INTERFACE SECTION....O-1
1.1 Configuration....O-1
1.1.1 Front side....O-1
1.1.2 Right side....O-2
1.1.3 Rear side....O-3
2. SCANNER SECTION....O-4
2.1 Configuration....O-4
2.2 Drive....O-4
2.3 Operation....O-4
2.3.1 LED exposure unit....O-4
2.3.2 When the power is ON....O-5
2.3.3 Control when the Start key is pressed....O-5
2.3.4 Original scanning area....O-7
2.3.5 Original size detection control....O-7
2.3.6 Image processing....O-9
3. WRITE SECTION (PH SECTION)....O-10
3.1 Configuration....O-10
3.2 Operation....O-10
3.2.1 Outline....O-10
3.2.2 Laser exposure process....O-11
3.2.3 Laser emission timing....O-12
3.2.4 Laser emission stop....O-13
3.2.5 Laser emission area....O-13
3.2.6 Color registration control (color shift correction) system....O-13
3.2.7 Color skew correction control....O-16
3.2.8 Skew adjustment/skew adjustment reset....O-17
3.2.9 PH unit temperature detection control....O-17
3.2.10 PH window cleaning....O-17
3.2.11 Image processing....O-18
4. PHOTO CONDUCTOR SECTION....O-19
4.1 Configuration....O-19
4.2 Drive....O-20
4.3 Operation....O-20
4.3.1 Photo conductor drive mechanism....O-20
4.3.2 Erase LED control....O-21
4.3.3 Photo conductor cleaning....O-22
4.3.4 Electrostatic charger control....O-23
4.3.5 Charging roller cleaning....O-24
4.3.6 Drum unit detection....O-24
4.3.7 Drum unit life detection....O-25
4.3.8 Number of field standard printed pages....O-27
5. DEVELOPING SECTION....O-28
5.1 Configuration....O-28
5.2 Drive....O-28
5.2.1 Developing section/K drive mechanism....O-28
5.2.2 Developing section/Y, M, C drive mechanism....O-29
5.3 Operation....O-29
5.3.1 Developing unit pressure/releases mechanism....O-29
5.3.2 Developer flow....O-29
5.3.3 Auto refining developing system....O-30
5.3.4 Developing bias....O-30
5.3.5 Toner scattering prevention....O-31
5.3.6 Developing cooling....O-32
5.3.7 Toner density control....O-32
5.3.8 Developing unit detection....O-32
5.3.9 Developing unit life detection....O-33
5.3.10 Number of field standard printed pages....O-34
6. TONER SUPPLY SECTION....O-35
6.1 Configuration....O-35
6.2 Drive....O-35
6.2.1 Toner cartridge drive....O-35
6.2.2 Toner hopper drive....O-36
6.3 Operation....O-36
6.3.1 Toner replenishing overview....O-36
6.3.2 Toner replenishing from toner bottle to toner hopper....O-37
6.3.3 Toner replenishing from toner hopper to developing unit....O-37
6.3.4 Auxiliary toner replenishing control for toner hopper....O-38
6.3.5 Auxiliary toner replenishing control for developing unit....O-39
6.3.6 Toner spillage prevention shutter....O-39

6.3.7 Toner cartridge cooling mechanism....O-40
6.3.8 Front door mechanism....O-41
6.3.9 Life control....O-42
7. 1ST TRANSFER SECTION....O-45
7.1 Configuration....O-45
7.2 Drive....O-45
7.3 Operation....O-45
7.3.1 Transfer belt drive....O-45
7.3.2 1st transfer roller control....O-46
7.3.3 Pressure/retraction control by print mode....O-47
7.3.4 1st transfer control....O-50
7.3.5 Transfer belt cleaning....O-50
7.3.6 Waste toner spillage prevention shutter....O-52
7.3.7 Transfer belt cooling....O-52
7.3.8 Cleaning blade foreign matter removal control....O-53
7.3.9 Transfer belt new article detection....O-53
7.3.10 Transfer belt life detection....O-54
8. 2ND TRANSFER SECTION....O-56
8.1 Configuration....O-56
8.2 Drive....O-57
8.3 Operation....O-57
8.3.1 2nd transfer control....O-57
8.3.2 Control of toner application to 2nd transfer roller....O-57
8.3.3 2nd transfer roller cleaning....O-58
8.3.4 Charge neutralization and separation of paper....O-58
8.3.5 Paper winding prevention guide....O-59
8.3.6 IDC sensor protection....O-59
8.3.7 2nd transfer roller new article detection....O-60
8.3.8 2nd transfer roller life detection....O-60
9. TONER COLLECTING SECTION....O-62
9.1 Configuration....O-62
9.2 Drive....O-62
9.3 Operation....O-62
9.3.1 Waste toner box drive mechanism....O-62
9.3.2 Control of waste toner conveyance through waste toner box....O-63
9.3.3 Waste toner box-in-position detection....O-64
9.3.4 Waste toner box full detection....O-65
9.3.5 Waste toner box new article detection....O-67
9.3.6 Waste toner spillage prevention shutter....O-67
10. PAPER FEED SECTION (MANUAL BYPASS TRAY)....O-68
10.1 Configuration....O-68
10.2 Drive....O-68
10.3 Operation....O-69
10.3.1 Up/down control....O-69
10.3.2 Paper feed control....O-70
10.3.3 Paper size detection control....O-71
10.3.4 Paper empty detection control....O-72
10.3.5 Paper separation pressure switching mechanism....O-72
11. PAPER FEED SECTION....O-73
11.1 Configuration....O-73
11.1.1 Tray 1....O-73
11.1.2 Tray 2....O-74
11.2 Drive....O-74
11.2.1 Drive....O-74
11.2.2 Layout of sensors and rollers....O-75
11.3 Operation....O-75
11.3.1 Up/down control....O-75
11.3.2 Paper feed control....O-77
11.3.3 Paper pick-up pressure switching mechanism....O-81
11.3.4 Paper size detection control....O-81
11.3.5 Remaining paper detection control....O-83
11.3.6 Paper feed tray locking mechanism....O-84
11.3.7 Roller retract mechanism....O-85
11.3.8 Paper tray stopper release mechanism....O-86
11.3.9 Dehumidifier mechanism (PC-110/PC-210/PC-410/DK-510/ HT-509/MK-719)....O-87
12. VERTICAL TRANSPORT SECTION....O-89
12.1 Configuration....O-89
12.2 Drive....O-89
12.3 Operation....O-90

12.3.1 Vertical transport control....O-90
12.3.2 Transport clutch control....O-90
12.3.3 Operation timing....O-90
12.3.4 Right door mechanism....O-90
13. REGISTRATION SECTION....O-94
13.1 Configuration....O-94
13.2 Drive....O-95
13.3 Operation....O-95
13.3.1 Registration control....O-95
14. FUSING SECTION....O-98
14.1 Configuration....O-98
14.2 Drive....O-99
14.2.1 Fusing section roller drive....O-99
14.2.2 Pressure roller pressure drive....O-99
14.3 Operation....O-99
14.3.1 Fusing drive release mechanism....O-99
14.3.2 Fusing speed correction....O-100
14.3.3 Fusing pressure/retraction control....O-101
14.3.4 Paper transport control....O-102
14.3.5 Paper separation mechanism....O-103
14.3.6 Fusing temperature control....O-103
14.3.7 Plain paper fusing temperature control....O-106
14.3.8 Smart Fusing Control....O-107
14.3.9 Protection from abnormal temperatures....O-108
14.3.10 Fusing PPM control....O-108
14.3.11 Fusing unit new article detection....O-109
14.3.12 Fusing unit life detection....O-109
14.3.13 Fusing cooling control....O-110
15. PAPER EXIT/REVERSE SECTION....O-111
15.1 Configuration....O-111
15.2 Drive....O-111
15.3 Operation....O-112
15.3.1 Transport control....O-112
15.3.2 Exit paper cooling mechanism....O-113
15.3.3 Air filtering system....O-114
16. DUPLEX SECTION....O-116
16.1 Configuration....O-116
16.2 Drive....O-117
16.3 Operation....O-117
16.3.1 Paper transport control....O-117
16.3.2 Duplex circulation control....O-119
17. IMAGE STABILIZATION CONTROL....O-125
17.1 Overview....O-125
17.2 Description of control....O-125
17.2.1 IDC sensor adjustment control....O-125
17.2.2 Max. density adjustment control....O-125
17.2.3 LD intensity adjustment control....O-125
17.2.4 Color registration control (color shift correction)....O-126
17.2.5 Gamma correction control....O-126
17.3 Control contents....O-126
17.3.1 Image stabilization type (mode)....O-126
17.3.2 Control sequence by mode....O-126
17.4 Operation timing....O-126
17.4.1 Predrive operation....O-126
17.4.2 During a print cycle....O-127
17.4.3 Service Mode....O-128
17.4.4 Expert Adjustment....O-129
17.4.5 Stabilization time....O-129
18. IMAGE PROCESSING....O-130
18.1 Scanner section image processing block diagram....O-130
18.1.1 Image processing block diagram....O-130
18.1.2 Detail....O-130
18.2 Write section image processing block diagram....O-131
18.2.1 Image processing block diagram....O-131
18.2.2 Detail....O-132
19. POWER SUPPLY SECTION....O-133
19.1 Main power switch....O-133
19.2 Power key....O-133

19.2.1 Configuration....O-133
19.2.2 Operation....O-133
19.3 Power cables....O-134
19.3.1 Configuration....O-134
19.3.2 Operation....O-134
20. FAN CONTROL....O-135
20.1 Configuration....O-135
20.1.1 Front view....O-135
20.1.2 Rear view....O-135
20.2 Function....O-136
20.3 Control....O-136
21. COUNTER CONTROL....O-137
21.1 Configuration....O-137
21.2 Operation....O-137
22. INDICATOR FUNCTION....O-138
22.1 Configuration....O-138
22.1.1 Control panel section....O-138
22.1.2 Front side section....O-138
22.2 Control....O-138
22.2.1 Power key and Start key indicator section....O-138
22.2.2 Warning status indicator section....O-139
22.2.3 Operation status indicator section....O-140
22.2.4 Data indicator section....O-140
22.2.5 Remaining paper level display section....O-141
PA THEORY OF OPERATION DF-629....PA-1
1. CONFIGURATION....PA-1
1.1 Section configuration....PA-1
1.2 Paper path....PA-1
1.2.1 1-sided paper path....PA-1
1.2.2 2-sided paper path....PA-1
1.3 Main part configuration....PA-1
1.3.1 Main electrical part....PA-1
1.3.2 Sensor....PA-2
1.3.3 Roller placement....PA-2
2. DRIVE....PA-3
2.1 Paper feed drive....PA-3
2.2 Registration drive....PA-3
2.3 Document reading drive....PA-4
2.4 Document reading glass cleaning drive....PA-4
3. OPERATION....PA-5
3.1 Document feed section....PA-5
3.1.1 Document set/empty detection....PA-5
3.1.2 Document size detection mechanism....PA-5
3.1.3 Pick-up roller up/down control....PA-6
3.1.4 Document feed/separation control....PA-7
3.1.5 Document separation roller pressure switching mechanism....PA-8
3.2 Document registration section....PA-8
3.2.1 Document registration outline....PA-8
3.2.2 Document registration loop formation process....PA-9
3.3 Document reading section....PA-9
3.3.1 Transport mechanism....PA-9
3.3.2 Document reading glass cleaning mechanism....PA-9
3.3.3 Document reading roll pressure/release control....PA-11
3.3.4 Document reading front guide....PA-12
3.4 Document switchback/exit section....PA-12
3.4.1 Document switchback/exit mechanism....PA-12
3.4.2 Switching mechanism for document switchback/exit....PA-13
3.4.3 Switchback exit roll pressure/retraction control....PA-13
3.4.4 Faxed document stamp function....PA-13
3.5 Paper path operation....PA-15
3.5.1 1-sided mode....PA-15
3.5.2 2-sided mode....PA-15
3.6 DF open/close detection mechanism....PA-15
3.6.1 Document exchange detection control....PA-15
3.6.2 DF open/close detection....PA-15
3.7 Cooling inside the unit mechanism....PA-16
3.8 DF Skew(Front) adjustment mechanism....PA-16
3.8.1 Hinge on the right side of the machine (front)....PA-16

3.8.2 Hinge on the right side of the machine (rear)....PA-17
3.8.3 Adjustment direction conceptual drawing....PA-17
PB THEORY OF OPERATION DF-704....PB-1
1. CONFIGURATION....PB-1
1.1 Section configuration....PB-1
1.2 Paper path....PB-1
1.3 Main part configuration....PB-1
1.3.1 Main electrical part....PB-1
1.3.2 Sensor....PB-2
1.3.3 Roller placement....PB-2
2. DRIVE....PB-3
2.1 Paper feed drive....PB-3
2.2 Registration drive....PB-3
2.3 Document reading drive....PB-4
2.4 Document reading glass / CIS glass cleaning drive....PB-4
3. OPERATION....PB-5
3.1 Document feed section....PB-5
3.1.1 Document set/empty detection....PB-5
3.1.2 Document size detection mechanism....PB-5
3.1.3 Pick-up roller up/down control....PB-7
3.1.4 Document feed/separation control....PB-7
3.1.5 Document separation roller pressure switching mechanism....PB-9
3.2 Document registration section....PB-9
3.2.1 Document registration outline....PB-9
3.2.2 Document registration loop formation process....PB-9
3.3 1-sided document reading section....PB-9
3.3.1 Document reading section....PB-9
3.3.2 Document reading roll pressure/release control....PB-10
3.3.3 Document reading front guide....PB-11
3.3.4 Document reading glass cleaning mechanism....PB-11
3.4 2-sided document reading section....PB-13
3.4.1 CIS original reading mechanism....PB-13
3.4.2 CIS control when power is turned ON....PB-14
3.4.3 CIS control when the document is loaded....PB-15
3.4.4 CIS control when the start key is pressed....PB-15
3.4.5 CIS glass contamination prevention control....PB-16
3.4.6 CIS cover....PB-16
3.5 Docuemnt exit section....PB-17
3.5.1 Document exit mechanism....PB-17
3.5.2 Faxed document stamp function....PB-17
3.6 Paper path operation....PB-18
3.7 DF open/close detection mechanism....PB-19
3.7.1 Document exchange detection control....PB-19
3.7.2 DF open/close detection....PB-19
3.8 Cooling inside the unit mechanism....PB-19
3.9 DF skew adjustment mechanism....PB-19
3.9.1 DF Skew(Front) adjustment mechanism....PB-19
3.9.2 DF Skew(Back) adjustment mechanism....PB-21
PC THEORY OF OPERATION PC-110/PC-210....PC-1
1. CONFIGURATION....PC-1
2. PAPER PATH....PC-2
3. DRIVE....PC-3
4. OPERATION....PC-4
4.1 Paper feed section....PC-4
4.1.1 Paper feed drive mechanism....PC-4
4.1.2 Roller retract mechanism....PC-4
4.1.3 Paper lifting motion....PC-5
4.2 Paper feed tray section....PC-6
4.2.1 Paper size detection....PC-6
4.2.2 Paper feed tray locking mechanism....PC-7
4.2.3 Remaining paper display mechanism....PC-7
4.3 Dehumidifier mechanism (HT-509/MK-734)....PC-8
4.3.1 Configuration....PC-8
4.3.2 Function....PC-8
4.3.3 Control....PC-8
PD THEORY OF OPERATION PC-410....PD-1

1. CONFIGURATION....PD-1
2. PAPER PATH....PD-2
3. DRIVE....PD-3
4. OPERATION....PD-4
4.1 Paper feed section....PD-4
4.1.1 Paper feed drive mechanism....PD-4
4.1.2 Roller retract mechanism....PD-4
4.2 Main tray section....PD-5
4.2.1 Main tray up / down mechanism....PD-5
4.2.2 Main tray lower limit detection....PD-6
4.3 Sub tray section....PD-7
4.3.1 Shifter drive mechanism....PD-7
4.3.2 Sub tray paper remaining amount....PD-7
4.4 Remaining paper amount displayed mechanism....PD-7
4.4.1 Display state....PD-7
4.5 Dehumidifier mechanism (HT-509/MK-719)....PD-8
4.5.1 Configuration....PD-8
4.5.2 Function....PD-9
4.5.3 Control....PD-9
PE THEORY OF OPERATION LU-302....PE-1
1. CONFIGURATION....PE-1
1.1 Section configuration....PE-1
1.2 Paper path....PE-1
1.3 Main part configuration....PE-1
1.3.1 Appearance....PE-1
1.3.2 Main part....PE-2
1.3.3 Electrical part....PE-2
2. DRIVE....PE-3
2.1 Paper feed and transport drive....PE-3
2.2 Paper lift-up drive....PE-3
3. OPERATION....PE-4
3.1 Unit open/close section....PE-4
3.1.1 Unit lock mechanism....PE-4
3.1.2 LU door open/close detection mechanism....PE-4
3.2 Paper storage section....PE-5
3.2.1 Paper tray lifting mechanism....PE-5
3.2.2 Paper tray lift-up drive release mechanism....PE-7
3.2.3 Paper size detection....PE-8
3.3 Paper feed/transport section....PE-9
3.3.1 Paper feed and transport control....PE-9
3.3.2 Remaining paper level detection....PE-11
3.3.3 Paper empty detection....PE-12
3.3.4 Remaining paper display....PE-12
3.4 Dehumidifier heater section....PE-13
3.4.1 Dehumidifier mechanism (TK-101/MK-719)....PE-13
PF THEORY OF OPERATION JS-506....PF-1
1. OVERVIEW OF THE SEPARATOR....PF-1
2. PAPER PATH....PF-2
2.1 Paper feed to the exit tray....PF-2
3. CONFIGURATION....PF-3
3.1 Section configuration....PF-3
3.2 Main electrical part configuration....PF-3
4. DRIVE....PF-4
4.1 Paper transport drive mechanism for exit tray 1....PF-4
4.2 Paper transport drive mechanism for exit tray 2....PF-4
4.3 Exit tray 2 shift mechanism....PF-4
5. OPERATION....PF-6
5.1 Exit tray 1....PF-6
5.1.1 Paper transport....PF-6
5.1.2 Paper full detection....PF-6
5.2 Exit tray 2....PF-7
5.2.1 Paper transport....PF-7
5.2.2 Paper shift mechanism....PF-7
5.2.3 Paper full detection....PF-9
PG THEORY OF OPERATION FS-533/PK-519....PG-1

1. FINISHER OUTLINE....PG-1
2. PAPER PATH....PG-2
2.1 Sort offset mode/Group offset mode/Staple mode/Punch mode....PG-2
2.2 Non sort mode/Non group mode/Non staple mode/Sort mode/Group mode/Punch mode....PG-2
3. CONFIGURATION....PG-3
3.1 Section configuration....PG-3
3.1.1 Exterior view....PG-3
3.1.2 Section configuration....PG-4
3.2 Electrical part configuration....PG-4
3.3 Main mechanical part configuration....PG-5
3.4 Main roller configuration....PG-5
4. UNIT OPEN/CLOSE SECTION....PG-6
4.1 Unit lock mechanism....PG-6
4.1.1 Finisher unit lock mechanism....PG-6
4.1.2 Punch unit lock mechanism (PK-519)....PG-6
5. PUNCH SECTION (PK-519)....PG-7
5.1 Configuration....PG-7
5.1.1 Punch kit type....PG-7
5.2 Drive....PG-8
5.3 Operation....PG-9
5.3.1 Skew correction mechanism....PG-9
5.3.2 Punch control....PG-10
5.3.3 Punch holes switch control....PG-11
5.3.4 Punch dust full detection control....PG-13
6. TRANSPORT SECTION....PG-17
6.1 Configuration....PG-17
6.2 Drive....PG-17
6.2.1 Drive outline....PG-17
6.2.2 Paper conveyance/receiving roller section drive....PG-17
6.2.3 Paper exit roller section drive....PG-18
6.3 Operation....PG-20
6.3.1 Paper conveyance/receiving roller section paper transport control....PG-20
6.3.2 Paper exit roller section paper transport control....PG-20
6.3.3 Paper exit roller up/down control....PG-22
6.3.4 Paper exit roller/lower drive connecting control....PG-23
7. ALIGNMENT SECTION....PG-25
7.1 Configuration....PG-25
7.2 Drive....PG-25
7.2.1 Drive outline....PG-25
7.2.2 Alignment roller section....PG-25
7.2.3 Alignment tray section....PG-28
7.3 Operation....PG-28
7.3.1 Paper alignment overview....PG-28
7.3.2 Paper alignment control (paper FD alignment)....PG-28
7.3.3 Paper alignment control (paper CD alignment)....PG-29
7.3.4 Alignment tray paper detect control....PG-31
8. STAPLER SECTION....PG-33
8.1 Configuration/Drive....PG-33
8.1.1 Stapler drive section top view....PG-33
8.2 Operation....PG-33
8.2.1 Stapler positioning control....PG-33
8.2.2 Stapling control....PG-33
8.2.3 Staple empty detection control....PG-34
8.2.4 Clogged staple detection control....PG-37
9. RECEIVING SECTION....PG-38
9.1 Configuration....PG-38
9.2 Drive....PG-38
9.2.1 Drive outline....PG-38
9.2.2 Tray lift up section....PG-38
9.2.3 Paper level detect section....PG-39
9.2.4 Paper exit roller section....PG-39
9.3 Operation....PG-40
9.3.1 Paper exit paddle control....PG-40
9.3.2 Paper exit tray lift up control....PG-41
9.3.3 Paper level detect control....PG-41
PH THEORY OF OPERATION FS-534/FS-534SD/RU-513/PK-520....PH-1
1. FINISHER OUTLINE....PH-1

2. PAPER PATH....PH-2
2.1 Sub tray....PH-2
2.2 Main tray....PH-3
2.3 Saddle tray....PH-4
2.4 3rd tray....PH-5
3. CONFIGURATION....PH-6
3.1 Section configuration....PH-6
3.1.1 Exterior view....PH-6
3.1.2 Section configuration....PH-7
3.2 Main electrical part configuration....PH-8
3.2.1 Control board, motor....PH-8
3.2.2 Sensor....PH-9
3.3 Main mechanical part configuration....PH-11
3.3.1 Overall configuration....PH-11
3.3.2 RU section (horizontal transport section)....PH-12
3.3.3 Paper feed/transport section, Alignment section, Tray section....PH-12
3.3.4 Punch section, Staple section, Exit section....PH-12
3.3.5 Saddle section....PH-14
3.4 Main roller configuration....PH-15
4. FNS SECTION....PH-16
4.1 Door open/close detection mechanism....PH-16
4.1.1 Front door open/close detection mechanism....PH-16
4.1.2 Upper door open/close detection mechanism....PH-16
5. RU SECTION (RU-513)....PH-17
5.1 Configuration....PH-17
5.2 Drive....PH-17
5.3 Operation....PH-18
5.3.1 Paper transport control....PH-18
5.3.2 RU section door open/close detection mechanism....PH-19
5.3.3 3rd exit tray full detection mechanism....PH-19
6. PUNCH SECTION (PK-520)....PH-21
6.1 Configuration....PH-21
6.1.1 Punch kit type....PH-22
6.2 Drive....PH-23
6.3 Operation....PH-24
6.3.1 Skew correction mechanism....PH-24
6.3.2 Puncher up/down status detection configuration....PH-25
6.3.3 Punch operation noise suppression....PH-26
6.3.4 Punch dust box full detection mechanism....PH-27
7. TRANSPORT SECTION....PH-28
7.1 Configuration....PH-28
7.1.1 Paper path....PH-28
7.1.2 Paper feed section - sub tray section....PH-28
7.1.3 Paper feed section - main tray section....PH-30
7.1.4 Main tray section - saddle section....PH-31
7.2 Drive....PH-32
7.2.1 FNS entry transport motor....PH-33
7.2.2 FNS discharge motor....PH-34
7.2.3 Receiving roller retraction motor....PH-34
7.3 Operation....PH-34
7.3.1 Paper path switching mechanism....PH-34
7.3.2 Sub tray exit mechanism....PH-36
7.3.3 Receiving roller section up/down function....PH-37
7.3.4 Buffer control....PH-38
8. ALIGNMENT SECTION....PH-42
8.1 Configuration....PH-42
8.1.1 Upper paddle section....PH-42
8.1.2 Exit section....PH-43
8.1.3 Stopper section (FD alignment section)....PH-44
8.1.4 Alignment tray section (CD alignment section)....PH-44
8.2 Drive....PH-44
8.2.1 Drive outline....PH-44
8.2.2 Upper paddle section....PH-45
8.2.3 Exit section....PH-46
8.2.4 Stopper section....PH-49
8.2.5 Alignment tray section....PH-49
8.3 Operation....PH-50
8.3.1 Paper transport control in alignment section....PH-50

9. STAPLER SECTION....PH-54
9.1 Configuration/Drive....PH-54
9.1.1 Configuration....PH-54
9.1.2 Drive....PH-54
9.2 Operation....PH-55
9.2.1 Stapler positioning control....PH-55
9.2.2 Stapling control....PH-55
9.2.3 Staple empty detection control....PH-56
9.2.4 Clogged staple detection control....PH-59
10. RECEIVING SECTION....PH-60
10.1 Configuration....PH-60
10.1.1 Configuration outline....PH-60
10.1.2 Main tray....PH-61
10.1.3 Sub tray....PH-61
10.1.4 3rd tray....PH-62
10.1.5 Saddle tray (FS-534SD only)....PH-62
10.2 Drive....PH-63
10.2.1 Main tray section....PH-63
10.2.2 Sub tray section....PH-65
10.2.3 3re tray section....PH-65
10.2.4 Saddle tray section....PH-65
10.3 Operation....PH-65
10.3.1 Sub tray exit mechanism....PH-65
10.3.2 Main tray paper level detection control....PH-66
10.3.3 Main tray upper detection mechanism....PH-68
10.3.4 Tray full detection mechanism....PH-69
11. SADDLE SECTION (FS-534SD ONLY)....PH-72
11.1 Configuration....PH-72
11.2 Transport section....PH-73
11.2.1 Drive....PH-73
11.2.2 Paper transport....PH-73
11.2.3 Curl cover....PH-73
11.3 Alignment section....PH-75
11.3.1 Drive....PH-75
11.3.2 Alignment....PH-75
11.3.3 Stopper guide....PH-76
11.4 Stapler....PH-77
11.4.1 Drive....PH-77
11.4.2 Operation....PH-78
11.5 Folding/Saddle stitching....PH-79
11.5.1 Drive....PH-79
11.5.2 Folding knife....PH-79
11.6 Tri-folding....PH-81
11.6.1 Drive....PH-81
11.6.2 Tri-folding operation....PH-81
11.7 Exit section....PH-82
11.7.1 Drive....PH-82
11.7.2 Paper exit....PH-83

PI THEORY OF OPERATION AU-102/AU-201S....PI-1

1. AU-102....PI-1
1.1 Configuration....PI-1
1.2 Operation....PI-1
2. AU-201S....PI-2
2.1 Configuration....PI-2
2.2 Operation....PI-2
2.3 Specifications....PI-2

PJ THEORY OF OPERATION EK-608/EK-609/SC-508....PJ-1

1. EK-608....PJ-1
1.1 Configuration....PJ-1
1.2 Operation....PJ-1
2. EK-609....PJ-2
2.1 Configuration....PJ-2
2.2 Operation....PJ-2
3. SC-508....PJ-3
3.1 Configuration....PJ-3
3.2 Operation....PJ-3

PK THEORY OF OPERATION UK-212....PK-1
1. CONFIGURATION....PK-1
1.1 Mounting position....PK-1
2. OPERATION....PK-2
2.1 Outline....PK-2
2.2 2nd network interface structure....PK-3
2.2.1 Wired Only....PK-3
2.2.2 Wireless Only....PK-3
2.2.3 Wired+Wireless (Secondary Mode)....PK-3
2.2.4 Wired+Wireless (Primary Mode)....PK-4
2.2.5 Wired+Wireless (Wi-Fi Direct)....PK-5
2.3 Operation on ErP Auto Power Off mode....PK-5
2.3.1 Wired + Wireless (Secondary Mode)....PK-5
2.3.2 Wired + Wireless (Primary Mode), Wired + Wireless (Wi-Fi Direct)....PK-6
2.3.3 Setting for printer driver....PK-7
PL THEORY OF OPERATION FK-514/FK-515/MK-742....PL-1
1. COMMUNICATION CONTROL....PL-1
1.1 FIF bits of DIS, DTC and DCS....PL-1
1.1.1 FIF data configuration list (DIS/DTC)....PL-1
1.1.2 FIF data configuration list (DCS)....PL-5
1.2 Modem fallback sequence....PL-9
1.2.1 V17, V29, and V27 ter....PL-9
1.2.2 V34 fallback....PL-9
1.3 V8/V34 sequence....PL-9
1.3.1 V34....PL-9
1.3.2 Sample of a signal procedure at sending two pages....PL-10
1.3.3 Procedure details....PL-10
1.3.4 Common signal bit definition....PL-12
1.3.5 Phase 2 (Probing) ..... V.34 basic setting....PL-13
1.3.6 Phase 3 .....Training of the main channel equalizer....PL-14
1.3.7 Re-synchronization procedure / Startup procedure....PL-16
1.3.8 Other....PL-17
2. FUNCTION....PL-18
2.1 Telephone function....PL-18
2.1.1 TEL/FAX switching....PL-18
2.2 F-code....PL-18
2.2.1 Signal format....PL-19
2.2.2 F-code confidential transmission....PL-19
2.2.3 F-code bulletin board polling....PL-20
2.2.4 F-code relay transmission....PL-21
2.3 Transmission function....PL-22
2.3.1 Original scan mode....PL-22
2.4 Reception function....PL-22
2.4.1 Reduction / division of reception....PL-22
2.4.2 Cassette / paper selection....PL-23
2.4.3 Compulsory memory reception....PL-23
2.4.4 Closed reception (Junk FAX)....PL-24
PM THEORY OF OPERATION HD-524....PM-1
1. CONFIGURATION....PM-1
1.1 Outline....PM-1
1.1.1 About RAID 1....PM-1
1.2 Unit configuration....PM-1
2. OPERATION....PM-2
2.1 HDD master/slave automatic switching control....PM-2
2.2 HDD failure detection control....PM-2
2.2.1 A master drive error has occurred (CD013)....PM-2
2.2.2 A slave drive error has occurred (CD014)....PM-2
2.2.3 A master-slave drive error has occurred (CD015)....PM-2
2.2.4 A master drive error has occurred during the HDD mirroring rebuilding (CD016)....PM-3
2.2.5 A slave drive error occurred during the HDD mirroring rebuilding (CD017)....PM-3
2.3 HDD mirroring rebuild....PM-3
2.3.1 Example: When HDD (B) is installed and rebuilding is executed....PM-3
2.3.2 Example: When an HDD (A) R/W error occurs and HDD is replaced....PM-4
2.4 Format HDD....PM-4
PN THEORY OF OPERATION CU-101/MK-745....PN-1
1. CONFIGURATION....PN-1

2. OPERATION....PN-2
2.1 Exhaust control....PN-2
2.2 Filter configuration....PN-2
2.3 Airflow....PN-2
2.4 Operation timing....PN-3
S LAYOUT DRAWINGS FOR RELATED PARTS BY EACH TROUBLE CODE....S-1
1. C0002....S-1
2. C0106....S-2
2.1 PC-110/PC-210....S-2
2.2 PC-410....S-3
3. C0107....S-4
3.1 PC-110/PC-210....S-4
3.2 PC-410....S-5
4. C0108....S-6
5. C0109....S-7
6. C0202....S-8
7. C0204....S-9
8. C0206....S-10
9. C0208....S-11
10. C0210....S-12
11. C0211....S-13
12. C0214....S-14
13. C0216....S-15
14. C1004, CC155, CD704....S-16
15. C1081....S-17
16. C1102....S-18
16.1 FS-533....S-18
16.2 FS-534/FS-534SD....S-19
17. C1103....S-20
17.1 FS-533....S-20
17.2 FS-534/FS-534SD....S-21
18. C1105....S-22
19. C1106....S-23
19.1 FS-533....S-23
19.2 FS-534/FS-534SD....S-24
20. C1109....S-25
20.1 FS-533....S-25
20.2 FS-534/FS-534SD....S-26
21. C1112....S-27
22. C1113....S-28
23. C1114....S-29
24. C1115....S-30
25. C1132....S-31
25.1 FS-533+PK-519....S-31
25.2 FS-534+PK-520/FS-534SD+PK-520....S-32
26. C1140....S-33
26.1 FS-533....S-33
26.2 FS-534/FS-534SD....S-34
27. C1141....S-35
28. C1144....S-36
29. C1145....S-37
30. C1156....S-38
31. C1182....S-39
32. C1184....S-40
33. C1195....S-41
34. C1196....S-42
35. C1197....S-43
36. C11A1....S-44

37. C11A2....S-45
38. C11E1....S-46
39. C1402....S-47
40. C2152, C2153, C2154, C2155, C2156....S-48
41. C2253, C2254....S-50
42. C2255, C2256....S-51
43. C2355....S-52
44. C2411, C2552, C2561....S-53
45. C2412, C2554, C2562....S-54
46. C2413, C2556, C2563....S-55
47. C2414, C2558, C2564....S-56
48. C2551....S-57
49. C2553....S-59
50. C2555....S-61
51. C2557....S-63
52. C2559....S-64
53. C255A....S-66
54. C255B....S-68
55. C255C....S-70
56. C2650, CC163....S-71
57. C2A11, C2A12, C2A13, C2A14....S-72
58. C2A21, C2A22, C2A23, C2A24....S-73
59. C3101, C3103....S-74
60. C3201, C3202....S-75
61. C3302....S-76
62. C3425....S-77
63. C3722, C3922....S-79
64. C3725, C3825, C3925, C392A....S-80
65. C3726, C3826, C3926....S-81
66. C3731....S-82
67. C392B....S-83
68. C4091 - C40A4, C5601, C5605, C5606, CA051 - CA053, CC151, CC152, CC15C, CC170 - CC186, CC191 - CC216, CD211 - CD261, CD401 - CD413, CD701 - CD703, CD705, CD706, CE001, CE003 - CE305, CEEE1, CEEE3... S-84
69. C4101....S-85
70. C4501....S-86
71. C5102, C5103....S-87
72. C5351....S-88
73. C5355....S-89
74. C5360....S-90
75. C5370....S-91
76. C5501....S-92
77. C5603, C5610, C5611....S-93
78. C5604....S-94
79. C6001....S-95
80. C6002....S-96
81. C6102, C6103....S-97
82. C6104, C6105....S-98
83. C6704, C6751, CDF50, CDF70, CDFA0....S-99
84. C6752....S-100
85. C6753....S-101
86. C6754, C6755....S-102
87. C6756....S-103
88. C6901, C6902, C6903....S-104
89. C6911, C6912, C6913....S-105

90. C6F01, C6F02, C6F03, C6F04, C6F05, C6F07, C6F08, C6F09, C6F0A, C6FFDC, C6FDD....S-106
91. C8101....S-107
91.1 DF-629....S-107
91.2 DF-704....S-108
92. C8107....S-109
92.1 DF-629....S-109
92.2 DF-704....S-110
93. C8302....S-111
93.1 DF-629....S-111
93.2 DF-704....S-112
94. C8401, CC156....S-113
95. C9401, C9402....S-114
96. C9403, C9404....S-115
97. CC159, CC15A....S-116
98. CC15B....S-117
99. CC164, CD3A0....S-118
100. CC190, CD002, CD004, CD00F, CD020, CD050....S-119
101. CD010, CE002....S-120
102. CD011, CD012, CD013, CD014, CD015, CD016, CD017, CD030, CD041, CD042, CD043, CD044, CD045, CD046, CD047, CD048, CD049, CD04A, CD04B....S-121
103. CD201, CD202, CD203, CD271....S-122
104. CD272....S-123
105. CD392....S-124
106. CDF51, CDF71, CDFA1....S-125
107. CED01....S-126
108. CEEE2....S-127

# Revision List

## bizhub C368/C308/C258 Function Version 2.0

| No. | ID | Title | Ver. | Descriptions of revision | Date |
|---|---|---|---|---|---|
| 1 | - | Issue of the first edition | - | - | 2015/05/29 |
| 2 | D0001467376 | I.2.11.5 Network Settings-IWS Settings | 2 | The function was added. | 2015/08/27 |
| 3 | D0001467354 | I.2.3.1 System Settings | 2 | The function was added. | 2015/08/27 |
| 4 | D0001467363 | I.2.3.9 System Connection | 2 | The function was added. | 2015/08/27 |
| 5 | D0001443556 | I.5.16.6 Software Switch Setting | 2 | The function was added. | 2015/08/27 |
| 6 | D0001443659 | I.5.22.8 Initialization | 2 | The explanation was modified. | 2015/08/27 |
| 7 | D0001443664 | I.5.23.4 Initialize | 2 | The explanation was modified. | 2015/08/27 |
| 8 | D0001443931 | K.3.4 List of the trouble code | 2 | Error correction. | 2015/08/27 |
| 9 | D0001444179 | K.8.3 B12# | 2 | Error correction. | 2015/08/27 |
| 10 | D0001444180 | K.8.4 B13# | 2 | Error correction. | 2015/08/27 |
| 11 | D0001444297 | N.1. bizhub C368/C308/C258 | 2 | The information for the C258 was added. | 2015/08/27 |
| 12 | D0001444434 | O.14.3.12 Fusing unit life detection | 2 | The explanation was modified. | 2015/08/27 |
| 13 | D0001444340 | O.4.3.7 Drum unit life detection | 2 | The explanation was modified. | 2015/08/27 |
| 14 | D0001444354 | O.5.3.9 Developing unit life detection | 2 | The explanation was modified. | 2015/08/27 |
| 15 | D0001444378 | O.7.3.10 Transfer belt life detection | 2 | The explanation was modified. | 2015/08/27 |
| 16 | D0001444388 | O.8.3.8 2nd transfer roller life detection | 2 | The explanation was modified. | 2015/08/27 |
| 17 | D0001444679 | PL.2.1.1 TEL/FAX switching | 2 | Error correction. | 2015/08/27 |
| 18 | D0001442638 | A.3.6 Laser Safety | 2 | The information for the C258 was added. | 2015/08/28 |
| 19 | D0001442642 | B.2. PRODUCT NAME | 2 | The information for the C258 was added. | 2015/08/28 |
| 20 | D0001442646 | C.1.2 Function | 2 | The information for the C258 was added. | 2015/08/28 |
| 21 | D0001442647 | C.1.3 Paper | 2 | The information for the C258 was added. | 2015/08/28 |
| 22 | D0001442648 | C.1.4 Material | 2 | The information for the C258 was added. | 2015/08/28 |
| 23 | D0001442649 | C.1.5 Print volume | 2 | The information for the C258 was added. | 2015/08/28 |
| 24 | D0001442652 | C.1.8 Print function | 2 | The information for the C258 was added. | 2015/08/28 |
| 25 | D0001442653 | C.1.9 Scan function | 2 | The information for the C258 was added. | 2015/08/28 |
| 26 | D0001442666 | C.14.1 Available function for i-Option | 2 | The explanation was modified. | 2015/08/28 |
| 27 | D0001442655 | C.2. DF-629 | 2 | The explanation was modified. | 2015/08/28 |
| 28 | D0001442656 | C.3. DF-704 | 2 | The explanation was modified. | 2015/08/28 |
| 29 | D0001442671 | D.1.1 System configuration | 2 | The information for the C258 was added. | 2015/08/28 |
| 30 | D0001442674 | D.4. CONTROL BLOCK DIAGRAM | 2 | The explanation was modified. | 2015/08/28 |
| 31 | D0001442677 | D.7 PROCESS SPEED | 2 | The information for the C258 was added. | 2015/08/28 |

| No. | ID | Title | Ver. | Descriptions of revision | Date |
|---|---|---|---|---|---|
| 32 | D0001442686 | F.3.1 bizhub C368/C308/C258 | 2 | The information for the C258 was added. | 2015/08/28 |
| 33 | D0001442687 | F.3.2 Option | 2 | The information for the C258 was added. | 2015/08/28 |
| 34 | D0001442689 | F.5.1 Life value of consumables and parts | 2 | The information for the C258 was added. | 2015/08/28 |
| 35 | D0001442690 | F.5.2 Details of the life specifications | 2 | The explanation was modified. | 2015/08/28 |
| 36 | D0001442694 | F.6.1.1 Replacing the drum unit | 2 | The information for the C258 was added. | 2015/08/28 |
| 37 | D0001442696 | F.6.2.1 Replacing the developing unit | 2 | The information for the C258 was added. | 2015/08/28 |
| 38 | D0001442697 | F.6.3.1 Replacing the toner cartridge | 2 | The information for the C258 was added. | 2015/08/28 |
| 39 | D0001442700 | F.6.4.3 Replacing the transfer belt unit | 2 | The information for the C258 was added. | 2015/08/28 |
| 40 | D0001442701 | F.6.5.1 Replacing the transfer roller unit | 2 | The information for the C258 was added. | 2015/08/28 |
| 41 | D0001442702 | F.6.6.1 Replacing the waste toner box | 2 | The information for the C258 was added. | 2015/08/28 |
| 42 | D0001442703 | F.6.6.2 Cleaning of the area around the waste toner collecting port | 2 | The explanation was modified. | 2015/08/28 |
| 43 | D0001442708 | F.6.9.1 Replacing the fusing unit | 2 | The information for the C258 was added. | 2015/08/28 |
| 44 | D0001442722 | F.7.1.3 Replacing the paper feed assy. | 2 | The explanation was modified. | 2015/08/28 |
| 45 | D0001508913 | F.7.1.4 Replacing the pick-up roller/feed roller | 3 | The explanation was modified. | 2015/08/28 |
| 46 | D0001442723 | F.7.1.5 Replacing the separation roller assy | 2 | The explanation was modified. | 2015/08/28 |
| 47 | D0001442713 | F.8.1.3 Replacing the paper feed assy. | 2 | The explanation was modified. | 2015/08/28 |
| 48 | D0001508914 | F.8.1.4 Replacing the pick-up roller/feed roller | 3 | The explanation was modified. | 2015/08/28 |
| 49 | D0001442714 | F.8.1.5 Replacing the separation roller assy | 2 | The explanation was modified. | 2015/08/28 |
| 50 | D0001443585 | I.5.17.2 Life | 2 | Error correction. | 2015/08/28 |
| 51 | D0001443493 | I.5.6.11 Grad/Dev AC Bias V Selection | 2 | Error correction. | 2015/08/28 |
| 52 | D0001443848 | J.2. USB memory | 2 | The information for the C258 was added. | 2015/08/28 |
| 53 | D0001443850 | J.3.2 Making the firmware data | 2 | The explanation was modified. | 2015/08/28 |
| 54 | D0001444014 | K.3.11.13 C6F01, C6F02, C6F03, C6F04, C6F05, C6F07, C6F08, C6F09, C6F0A, C6FFDC, C6FDD | 2 | Error correction. | 2015/08/28 |
| 55 | D0001444019 | K.3.13.1 C9401, C9402 | 2 | Error correction. | 2015/08/28 |
| 56 | D0001443975 | K.3.7.6 C2551, C2553, C2555 | 2 | Error correction. | 2015/08/28 |
| 57 | D0001467271 | K.3.7.8 C2557 | 2 | Error correction. | 2015/08/28 |
| 58 | D0001443990 | K.3.9.4 C4501 | 2 | Error correction. | 2015/08/28 |
| 59 | D0001444266 | L.1.1.3 Back side | 2 | Error correction. | 2015/08/28 |
| 60 | D0001444279 | L.1.8 FS-534 (Option) | 2 | Error correction. | 2015/08/28 |
| 61 | D0001444307 | O.1.1.1 Front side | 2 | Error correction. | 2015/08/28 |
| 62 | D0001444442 | O.16.3.1 Paper transport control | 2 | The explanation was modified. | 2015/08/28 |
| 63 | D0001444453 | O.17.4.2 During a print cycle | 2 | The explanation was modified. | 2015/08/28 |

| No. | ID | Title | Ver. | Descriptions of revision | Date |
|---|---|---|---|---|---|
| 64 | D0001444456 | O.17.4.5 Stabilization time | 2 | The information for the C258 was added. | 2015/08/28 |
| 65 | D0001444460 | O.19.2.1 Configuration | 2 | Error correction. | 2015/08/28 |
| 66 | D0001444461 | O.19.2.2 Operation | 2 | Error correction. | 2015/08/28 |
| 67 | D0001444315 | O.2.3.4 Original scanning area | 2 | The explanation was modified. | 2015/08/28 |
| 68 | D0001444371 | O.7.3.3 Pressure/retraction control by print mode | 2 | The information for the C258 was added. | 2015/08/28 |
| 69 | D0001444394 | O.9.3.4 Waste toner box full detection | 2 | The information for the C258 was added. | 2015/08/28 |
| 70 | D0001444484 | PA.3.1.4 Document feed/separation control | 2 | The explanation was modified. | 2015/08/28 |
| 71 | D0001444510 | PB.3.1.4 Document feed/separation control | 2 | The explanation was modified. | 2015/08/28 |
| 72 | D0001444548 | PF.1. OVERVIEW OF THE SEPARATOR | 2 | The information for the C258 was added. | 2015/08/28 |
| 73 | D0001467187 | PH.6.3.3 Punch operation noise suppression | 2 | The explanation was modified. | 2015/08/28 |
| 74 | - | Section S | 1 | Add to the section S (Layout drawings for related parts by each trouble code) | 2015/08/28 |
| 75 | D0001442787 | G.5.3.8 Hard disk (A) | 2 | The explanation was modified. | 2015/08/31 |
| 76 | D0001467319 | G.6.18.1 Hard disk (B) (HDD-524) | 2 | The explanation was modified. | 2015/08/31 |
| 77 | D0001509086 | I.6.1 Function outline | 1 | The explanation was added. | 2015/08/31 |
| 78 | D0001509087 | I.6.2 Starting/Exiting | 1 | The explanation was added. | 2015/08/31 |
| 79 | D0001442778 | G.5.2.23 Tray 1 | 2 | The explanation was modified. | 2015/09/01 |
| 80 | D0001442779 | G.5.2.24 Tray 2 | 2 | The explanation was modified. | 2015/09/01 |
| 81 | D0001442893 | G.6.4.4 Tray 3, tray 4 (PC-110/PC-210) | 2 | The explanation was modified. | 2015/09/01 |
| 82 | D0001442908 | G.6.5.4 Paper feed tray (PC-410) | 2 | The explanation was modified. | 2015/09/01 |
| 83 | D0001443852 | J.5. Auto Update setting | 2 | The explanation was modified. | 2015/09/03 |
| 84 | D0001467215 | PA.3.3.4 Document reading front guide | 2 | The explanation was modified. | 2015/09/03 |
| 85 | D0001467213 | PB.3.3.3 Document reading front guide | 2 | The explanation was modified. | 2015/09/03 |
| 86 | D0001444444 | O.17.1 Overview | 2 | The explanation was modified. | 2015/09/03 |
| 87 | D0001442727 | F.7.3.2 Cleaning of the reflective sensor section | 2 | The explanation was modified. | 2015/09/06 |
| 88 | D0001442718 | F.8.3.2 Cleaning of the reflective sensor section | 2 | The explanation was modified. | 2015/09/06 |
| 89 | D0001442887 | G.6.2.14 Document exit roller release solenoid (SD1) (DF-629) | 2 | The explanation was modified. | 2015/09/06 |
| 90 | D0001444643 | PH.10.3.4 Tray full detection mechanism | 2 | The explanation was modified. | 2015/09/08 |
| 91 | D0001443941 | K.3.5.10 C0210 | 3 | The explanation was added. | 2015/09/15 |
| 92 | D0001443943 | K.3.5.12 C0214 | 3 | The explanation was added. | 2015/09/15 |
| 93 | D0001443937 | K.3.5.6 C0202 | 3 | The explanation was added. | 2015/09/15 |
| 94 | D0001443938 | K.3.5.7 C0204 | 3 | The explanation was added. | 2015/09/15 |
| 95 | D0001443939 | K.3.5.8 C0206 | 3 | The explanation was added. | 2015/09/15 |
| 96 | D0001443940 | K.3.5.9 C0208 | 3 | The explanation was added. | 2015/09/15 |

# A SAFETY AND IMPORTANT WARNING ITEMS

Read carefully the safety and important warning items described below to understand them before doing service work.

# 1. IMPORTANT NOTICE

- Because of possible hazards to an inexperienced person servicing this product as well as the risk of damage to the product, KONICA MINOLTA, INC. (hereafter called KM) strongly recommends that all servicing be performed only by KM-trained service technicians.
- Changes may have been made to this product to improve its performance after this Service Manual was printed. Accordingly, KM does not warrant, either explicitly or implicitly, that the information contained in this service manual is complete and accurate.
- The user of this service manual must assume all risks of personal injury and/or damage to the product while servicing the product for which this service manual is intended. Therefore, this service manual must be carefully read before doing service work both in the course of technical training and even after that, for performing maintenance and control of the product properly.
- Keep this service manual also for future service.

# 2. DESCRIPTION ITEMS FOR DANGER, WARNING AND CAUTION

## 2.1 Description items in this Service Manual

In this Service Manual, each of three expressions "⚠DANGER", "⚠WARNING", and "⚠ CAUTION" are defined as follows.
When servicing the product, the relevant works (disassembling, reassembling, adjustment, repair, maintenance, etc.) need to be conducted with utmost care.

| | |
|---|---|
| ⚠ DANGER | : Action having a high possibility of suffering death or serious injury |
| ⚠ WARNING | : Action having a possibility of suffering death or serious injury |
| ⚠ CAUTION | : Action having a possibility of suffering a slight wound and property damage |

## 2.2 Description items for safety and important warning items

Symbols used for safety and important warning items are defined as follows:




Illustrations representing the power plug and wall outlet used in the following descriptions are only typical. Their shapes differ depending on the country or region.

# 3. SAFETY WARNINGS

## 3.1 MODIFICATIONS NOT AUTHORIZED BY KONICA MINOLTA, INC.

KONICA MINOLTA brand products are renowned for their high reliability. This reliability is achieved through high-quality design and a solid service network.
Product design is a highly complicated and delicate process where numerous mechanical, physical, and electrical aspects have to be taken into consideration, with the aim of arriving at proper tolerances and safety factors. For this reason, unauthorized modifications involve a high risk of degradation in performance and safety. Such modifications are therefore strictly prohibited. the points listed below are not exhaustive, but they illustrate the reasoning behind this policy.

### 3.1.1 Actions requiring special attention

**⚠WARNING**

- Do not make any modifications to the product unless otherwise instructed by KM.

- Do not use any part not specified by KM.

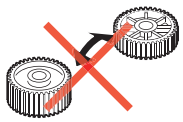

- Do not use any power cord or power plug not specified by KM.



- Use only the protective fuses specified by KM.
  Use of any type of fuse or related part not specified by KM makes safety devices inoperative which may result in a fire from high heat.

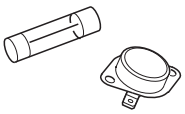

- Do not disable fuse functions or use a wire, metal clip, solder, or other conductor in place of the fuse.
  Fire may result from high heat.

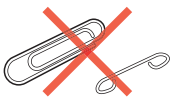

- Do not disable relay functions (for example, inserting a piece of paper between relay contacts to hamper circuit action.)
  Fire may result from high heat.

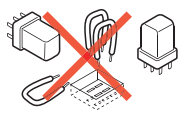

**⚠WARNING**

- Do not disable safety functions (for example, interlocks and safety circuits).
  Safety devices become inoperative, resulting in fire from high heat, electric shock, or injury.

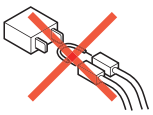

## 3.2 POWER PLUG SELECTION

In some countries or areas, the power plug provided with the product may not fit the wall outlet used in the area. In that case, it is the obligation of the customer engineer (hereafter called the CE) to attach the appropriate power plug or power cord set in order to connect the product to the supply.

### 3.2.1 Power Cord Set or Power Plug

**⚠WARNING**

- Use a power supply cord set which meets the following criteria:
  - provided with a plug having configuration intended for the connection to wall outlet appropriate for the product's rated voltage and current, and
  - the plug has pin/terminal(s) for grounding, and
  - provided with three-conductor cable having enough current capacity, and
  - the cord set meets regulatory requirements for the area.

  Use of inadequate cord set leads to fire or electric shock.



# ⚠WARNING

- Attach power plug which meets the following criteria:
  - having configuration intended for the connection to wall outlet appropriate for the product's rated voltage and current, and
  - the plug has pin/terminal(s) for grounding, and
  - meets regulatory requirements for the area.

  Use of inadequate cord set leads to the product connecting to inadequate power supply (voltage, current capacity, grounding), and may result in fire or electric shock.

- The wires in the power supply cord shall be connected to the terminals of the plug in accordance with the following:

| Color of the wire | | Terminal of the plug |
|---|---|---|
| Brown | Black | Marked with "L", "A" or "W" or colored RED |
| Light Blue | White | Marked with "N" or colored BLACK |
| Green-and-Yellow | | Marked with "E", "PE" or " ⏚ " or colored GREEN or GREEN-AND-YELLOW |

- Wrong connection may cancel safeguards within the product, and results in fire or electric shock.

## 3.3 CHECKPOINTS WHEN PERFORMING ON-SITE SERVICE

KONICA MINOLTA brand products are extensively tested before shipping, to ensure that all applicable safety standards are met, in order to protect the customer and customer engineer (hereafter called the CE) from the risk of injury. However, in daily use, any electrical equipment may be subject to parts wear and eventual failure. In order to maintain safety and reliability, the CE must perform regular safety checks.

### 3.3.1 Power Supply

#### (1) Connection to Power Supply

## ⚠WARNING

- The power outlet should have a capacity of at least the maximum power consumption and be dedicated only to the product.
  The current that can be passed through the outlet is limited and any current exceeding the limit could result in fire.




- If the wall outlet has two or more receptacles and the product and another electrical appliance are plugged into this wall outlet, make sure that the total load does not exceed the rating of the wall outlet. The current that can be passed through the outlet is limited and any current exceeding the limit could result in a fire.

- Do not use any conversion plug adapter even if the power plug shape does not match your wall outlet.
  The shapes of the power plug and the wall outlet are set according to the voltage and allowable current. Use of a conversion plug adapter could result in an abnormal voltage or insufficient current capacity, leading to a fire. It may also result in an electric shock due to a grounding failure.
  If the plug shape does not match the wall outlet, request the user to perform power source installation work.

## ⚠WARNING

- Make sure the power cord is plugged into the wall outlet securely.
  If the power plug is left loose in the wall outlet, contact failure may occur, leading to abnormal heating of the power plug and a risk of fire.

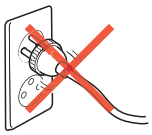

(2) Ground Connection

## ⚠WARNING

- Check whether the product is grounded properly.
  If current leakage occurs in an ungrounded product, you may suffer electric shock while operating the product.
  Connect power plug to grounded wall outlet.

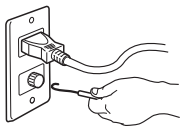

- Make sure of correct ground connection.
  If the grounding wire is connected to an inappropriate part, there is a risk of explosion or electric shock. Do not connect the grounding wire to any of the following parts:
  a. Gas pipe: Gas explosion or fire may result.
  b. Lightning rod: Risk of electric shock or fire during lightning.
  c. Grounding wire for telephone line: Risk of electric shock or fire during lightning.
  d. Water pipe and faucet: These parts do not serve as a ground connection because of a plastic part that is very often installed midway within the water pipe.

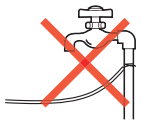

## (3) Power Plug and Cord

| WARNING | |
|---|---|
| • When using the power cord set (inlet type) that came with this product, make sure the connector is securely inserted in the inlet of the product.<br>When a securing measure is provided, secure the cord with the fixture properly.<br>If the power cord (inlet type) is not connected to the product securely, a contact problem may lead to increased resistance, overheating, and risk of fire. | 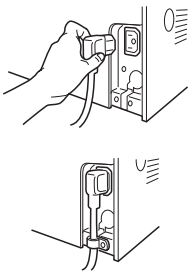 |
| • Do not allow the power cord to be stepped on or pinched.<br>Overheating may occur there, leading to a risk of fire. |  |
| • Check whether the power cord is damaged.<br>Check whether the sheath is damaged.<br>If the power plug, cord, or sheath is damaged, replace with a new power cord (with plug and connector on each end) specified by KMBT. Using the damaged power cord may result in fire or electric shock. |  |
| • Do not bundle or tie the power cord.<br>Overheating may occur there, leading to a risk of fire. | 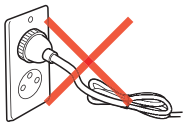 |
| • Check whether dust is collected around the power plug and wall outlet.<br>Using the power plug and wall outlet without removing dust may result in fire. | 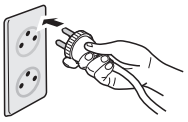 |
| • Do not insert the power plug into the wall outlet with a wet hand.<br>The risk of electric shock exists. | |

## ⚠WARNING

- When unplugging the power cord, grasp the plug, not the cable.
  The cable may be broken, leading to a risk of fire and electric shock.

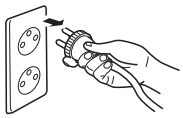

(4) Wiring

## ⚠WARNING

- Never use multi-plug adapters to plug multiple power cords in the same outlet.
  If used, the risk of fire exists.

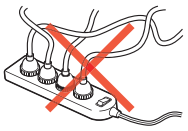

- When an extension cord is required, use one that meets the rated current, rated voltage, and the relevant safety standards of the country.
  Current that can be passed through the extension cable is limited and fire may result from the use of an inappropriate type of an extension cable.
  Do not use an extension cable reel with the cable taken up. Fire may result.



## 3.3.2 Installation Requirements

### (1) Prohibited Installation Places

**⚠WARNING**

- Do not place the product near flammable materials or volatile materials that may catch fire.
  A risk of fire exists.



- Do not place the product in a place exposed to water such as rain.
  A risk of fire and electric shock exists.

### (2) When not Using the Product for a long time

**⚠WARNING**

- When the product is not to be used for an extended period of time (for holidays, for example), instruct the user to turn OFF the power switch and unplug the power cord from the power outlet.
  Dust collected around the power plug and outlet may cause fire.

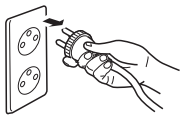

(3) Ventilation

**⚠CAUTION**

- The product generates ozone gas during operation.
  If the smell of ozone is present in the following cases, ventilate the room.
  a. When the product is used in a poorly ventilated room
  b. When making a lot of copies
  c. When using multiple products at the same time



(4) Stability

**⚠ CAUTION**

- Be sure to lock the caster stoppers.
  In the case of an earthquake, the product may slide, leading to an injury.

### 3.3.3 After Service

(1) Inspection before Servicing

## WARNING



- Before conducting an inspection, read all relevant documentation (service manual, technical notices, etc.) and proceed with the inspection following the prescribed procedure using the recommended personal safety equipment and using only the prescribed tools.
  Do not make any adjustment not described in the documentation.
  If the prescribed procedure or tool is not used, the product may break and a risk of injury or fire exists.





- Before conducting an inspection, be sure to disconnect the power plugs from the Main Body and Accessories (Options).
  When the power plug is inserted into the wall outlet, some units are still powered even if the POWER switch is turned OFF.
  A risk of electric shock exists.

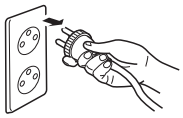

## CAUTION



- The area around the fixing unit is hot.
  You may get burned.

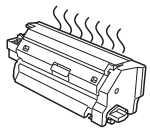

## CAUTION

- Do not leave the machine unattended during transportation, installation, and/or inspection.
  If the machine is left unattended, face protrusions toward the wall or take other necessary precautions to prevent a user or other person in the area from stumbling over a protrusion of the machine or being caught by a cable, possibly causing a fall to the floor or other personal injury.

(2) Work Performed with the Product Powered On

## WARNING

- Take every care when making adjustments or performing an operation check with the product powered.
  If you make adjustments or perform an operation check with the external cover detached, you may touch live or high-voltage parts or you may be caught in moving gears or the timing belt, leading to a risk of injury.

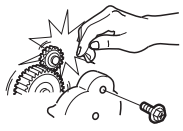

- Take every care when servicing with the external cover detached.
  High-voltage exists around the drum unit. A risk of electric shock exists.

- If it is absolutely necessary to service the machine with the door open or external covers removed, always be attentive to the motion of the internal parts.
  A normally protected part may cause unexpected hazards.

## ⚠CAUTION

- Do not keep gazing at a lamp light during the service procedure with the product powered ON.
  Eyestrain may result.

(3) Safety Checkpoints

## ⚠WARNING

- When a product fault is reported from a user, check parts and repair the fault appropriately with safety in mind.
  A damaged product, personal injury, or fire may result.

- Whenever mounting an option on the machine, be attentive to the motion of the other workers performing the task.
  Another worker may be injured by a pinch point between the machine and the option.

- When mounting an option on the machine, be careful about the clearance between the machine and the option.
  You may be injured with your finger or hand pinched between the machine and the option.

- When removing a part that secures a motor, gear, or other moving part, disassembling a unit, or reinstalling any of such parts and units, be careful about moving parts and use care not to drop any part or unit. During the service procedure, give sufficient support for any heavy unit.
  You may be injured by a falling part or unit.

# WARNING

- Check the external covers and frame for possible sharp edges, burrs, and damage.
  They can be a cause of injury during use or servicing.

- When accessing a hard-to-view or narrow spot, be careful about sharp edges and burrs on the frame and parts.
  They may injure your hands or fingers.

- Do not allow any metal parts such as clips, staples, and screws to fall into the product.
  They can short internal circuits and cause electric shock or spark bursting into flame.

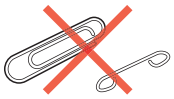

- Check wiring for pinched and any other damage.
  Current can leak, leading to a risk of electric shock or fire.

- Check high-voltage cables and sheaths for any damage.
  Damage may lead to product failure and/or the risk of fire.



- Do not disassemble or adjust the write unit (PH unit) incorporating a laser.
  The laser light can enter your eye, leading to a risk of loss of eyesight.

- Do not supply power with the write unit (PH unit) shifted from the specified mounting position.
  The laser light can enter your eye, leading to a risk of loss of eyesight.

- After replacing a part to which AC voltage is applied (e.g., optical lamp and fixing lamp), be sure to check the installation state.
  A risk of fire exists.

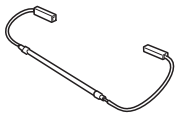

# WARNING

- Check the interlock switch and actuator for loosening and check whether the interlock functions properly.
  If the interlock does not function, you may receive an electric shock or be injured when you insert your hand in the product (e.g., for clearing paper jam).

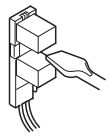

- Make sure the wiring cannot come into contact with sharp edges, burrs, or other pointed parts.
  Damage may lead to the risk of electric shock or fire.



- Make sure that all screws, components, wiring, connectors, etc. that were removed for safety check and maintenance have been reinstalled in the original location. (Pay special attention to forgotten connectors, pinched cables, forgotten screws, etc.)
  A risk of product trouble, personal injury, electric shock, and fire exists.




- Never use any flammable or combustible spray, fluid, gas, or similar substance in and around the product.
  Do not use any flammable or combustible dust spray, in particular, to clean the interior of the product.
  Fire or explosion may result.



# CAUTION

- Carefully remove all toner remnants and dust from electrical parts and electrode units such as a charging corona unit.
  Toner remnants and dust may lead to product failure and/or the risk of fire.

**CAUTION**

- Check electrode units such as a charging corona unit for deterioration and signs of leakage.
  Damage may lead to product failure and/or the risk of fire.

- When replacing a battery, replace it with a new one as specified.
  Dispose of the used battery as instructed on its packaging or by local ordinance.
  There is a risk of explosion if the battery is replaced with an incorrect type.

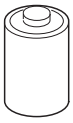

(4) Handling of Consumables

**WARNING**

- For handling of consumables (toner, developer, photoconductor, etc.) and their storage precautions, see MSDS.

(5) Handling of Service Materials

**CAUTION**

- Handle with care according to MSDS.
  Use of solvent may involve explosion, fire, or personal injury.



## 3.4 FUSE

| |
|---|
| CAUTION<br>Double pole / neutral fusing |
| ATTENTION<br>Double pôle / fusible sur le neutre. |

## 3.5 Used Batteries Precautions

### 3.5.1 ALL Areas

CAUTION

Danger of explosion if battery is incorrectly replaced.
Replace only with the same or equivalent type recommended by the manufacturer.
Dispose of used batteries according to the manufacturer's instructions.

### 3.5.2 Germany

VORSICHT!

Explosionsgefahr bei unsachgemäßem Austausch der Batterie.
Ersatz nur durch denselben oder einen vom Hersteller empfohlenen gleichwertigen Typ.
Entsorgung gebrauchter Batterien nach Angaben des Herstellers.

### 3.5.3 France

ATTENTION

Il y a danger d'explosion s'il y a remplacement incorrect de la batterie.
Remplacer uniquement avec une batterie du même type ou d'un type équivalent recommandé par le constructeur.
Mettre au rebut les batteries usagées conformément aux instructions du fabricant.

### 3.5.4 Denmark

ADVARSEL!

Lithiumbatteri - Eksplosionsfare ved fejlagtig håndtering.
Udskiftning må kun ske med batteri af samme fabrikat og type.
Levér det brugte batteri tilbage til leverandøren.

### 3.5.5 Finland, Sweden

VAROITUS

Paristo voi räjähtää, jos se on virheellisesti asennettu.
Vaihda paristo ainoastaan laitevalmistajan suosittelemaan tyyppiin.
Hävitä käytetty paristo valmistajan ohjeiden mukaisesti.

VARNING

Explosionsfara vid felaktigt batteribyte.
Använd samma batterityp eller en ekvivalent typ som rekommenderas av apparattillverkaren.
Kassera använt batteri enligt fabrikantens instruktion.

### 3.5.6 Norway

ADVARSEL

Eksplosjonsfare ved feilaktig skifte av batteri.
Benytt samme batteritype eller en tilsvarende type anbefalt av apparatfabrikanten.
Brukte batterier kasseres i henhold til fabrikantens instruksjoner.

# 3.6 Laser Safety

## 3.6.1 Laser Safety

This is a digital machine certified as a Class 1 laser product. There is no possibility of danger from a laser, provided the machine is serviced according to the instruction in this manual.

## 3.6.2 Internal Laser Radiation

- This product employs a Class 3B laser diode that emits an invisible laser beam. The laser diode and the scanning polygon mirror are incorporated in the print head unit.
- The print head unit is NOT A FIELD SERVICEABLE ITEM. Therefore, the print head unit should not be opened under any circumstances.

| semiconductor laser | | |
|---|---|---|
| Maximum power of the laser diode | | 15mW |
| Maximum average radiation power (*) | bizhub C368 | 8.1μW |
| | bizhub C308 | 7.1μW |
| | bizhub C258 | 7.1μW |
| Wavelength | | 770 to 800 nm |

*at laser aperture of the Print Head Unit

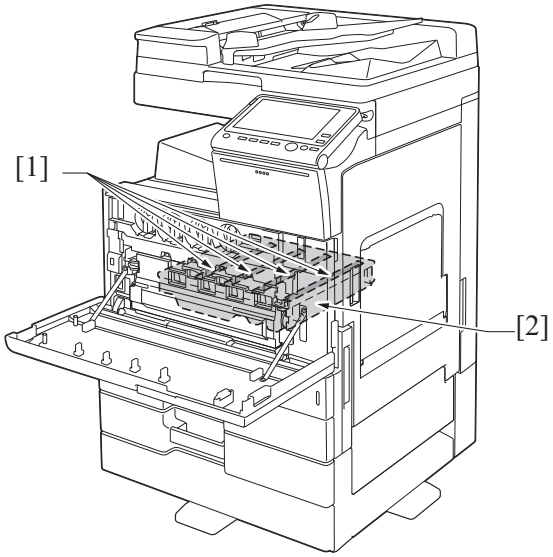


| [1] Laser Aperture of the Print Head Unit | [2] Print Head Unit |
|---|---|

### (1) U.S.A., Canada (CDRH Regulation)

- This machine is certified as a Class 1 Laser product under Radiation Performance Standard according to the Food, Drug and Cosmetic Act of 1990. Compliance is mandatory for Laser products marketed in the United States and is reported to the Center for Devices and Radiological Health (CDRH) of the U.S. Food and Drug Administration of the U.S. Department of Health and Human Services (DHHS). This means that the device does not produce hazardous laser radiation.
- The label shown on "A.3.6.3 Laser Safety Label" indicates compliance with the CDRH regulations and must be attached to laser products marketed in the United States.

**⚠WARNING**

Use of controls, adjustments or performance of procedures other than those specified in this manual may result in hazardous radiation exposure.

| semiconductor laser | |
|---|---|
| Maximum power of the laser diode | 15 mW |
| Wavelength | 770 to 800 nm |

### (2) All Areas

**⚠ WARNING**

Use of controls, adjustments or performance of procedures other than those specified in this manual may result in hazardous radiation exposure.

| semiconductor laser | |
|---|---|
| Maximum power of the laser diode | 15 mW |
| Wavelength | 770 to 800 nm |

## 3.6.3 Laser Safety Label

A laser safety label is attached to the outside of the machine as shown below.

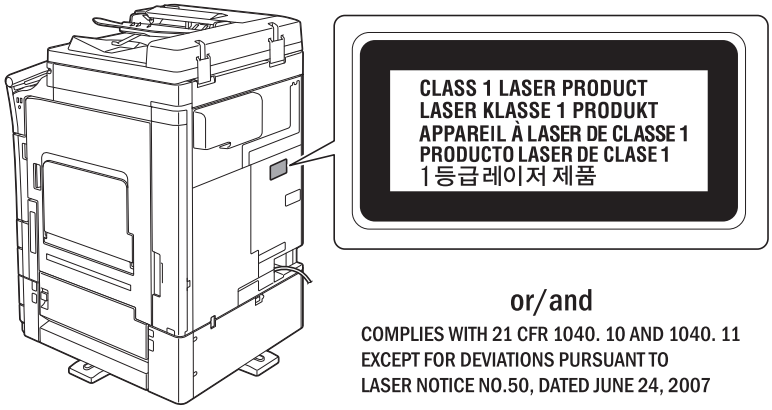


## 3.6.4 Laser Caution Label

A laser caution label is attached to the inside of the machine as shown below.

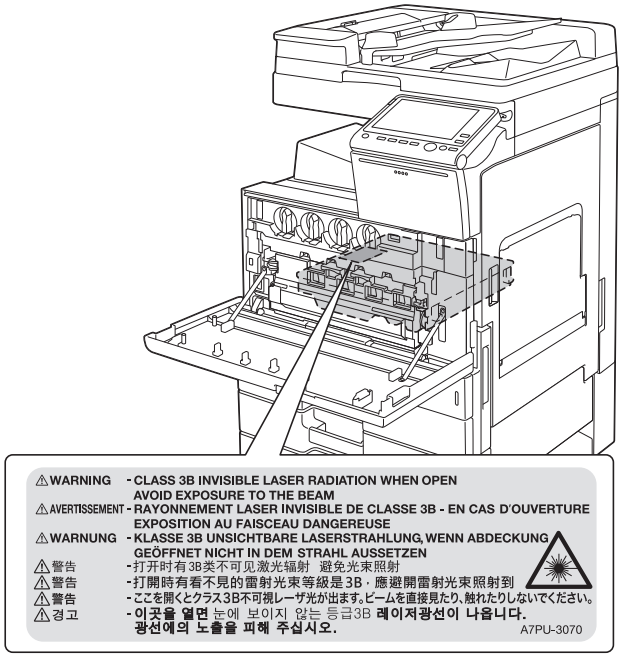


## 3.6.5 PRECAUTIONS FOR HANDLING THE LASER EQUIPMENT

- Be sure to unplug the power cord whenever performing a service job in the laser beam path (around the PH unit).
- If it is absolutely unavoidable to perform a service job with the power cord plugged in, strictly observe the following precautions:
  1. Before starting the service job, take off your watch, ring, and other reflective articles and be sure to wear laser protective goggles.
  2. Keep other personnel away from the work site.
  3. Do not bring any highly reflective tool into the laser beam path during the service procedure.

# 4. WARNING INDICATIONS ON THE MACHINE

Caution labels shown are attached in some areas on/in the machine.
When accessing these areas for maintenance, repair, or adjustment, special care should be taken to avoid burns and electric shock.

## 4.1 Warning indications inside the machine

| ⚠CAUTION |
|---|
| You may be burned or injured if you touch any area that you are advised not to touch by any caution label. Do not remove caution labels. If any caution label has come off or soiled and therefore the caution cannot be read, contact our service office. |

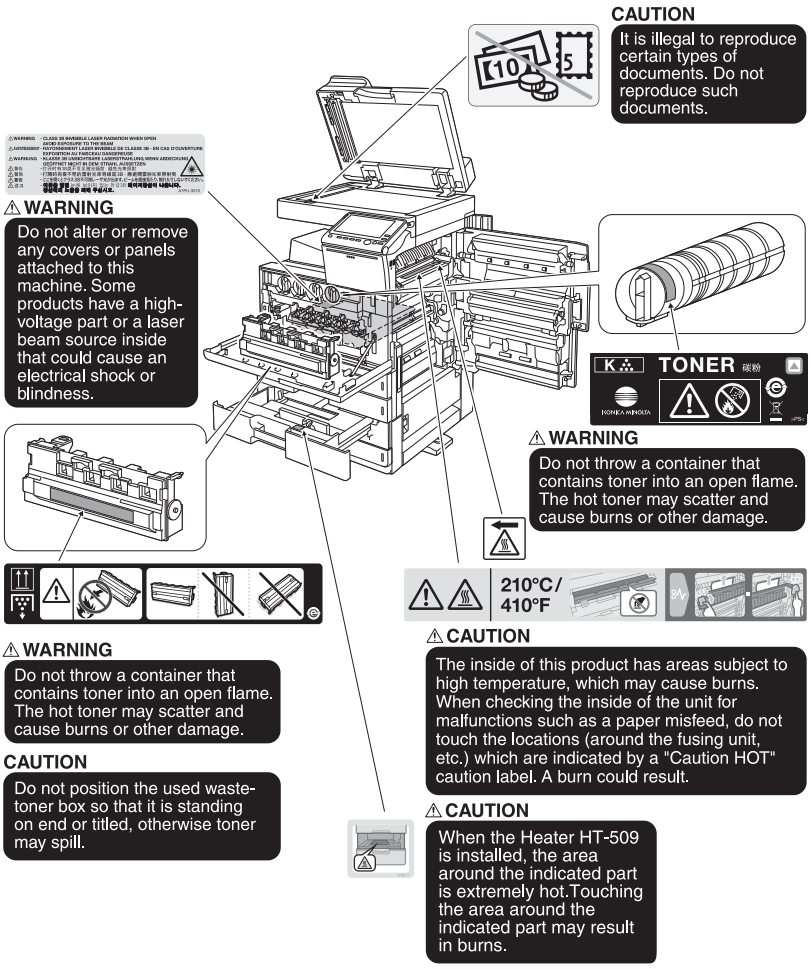

# 4.2 Warning indications on the boards

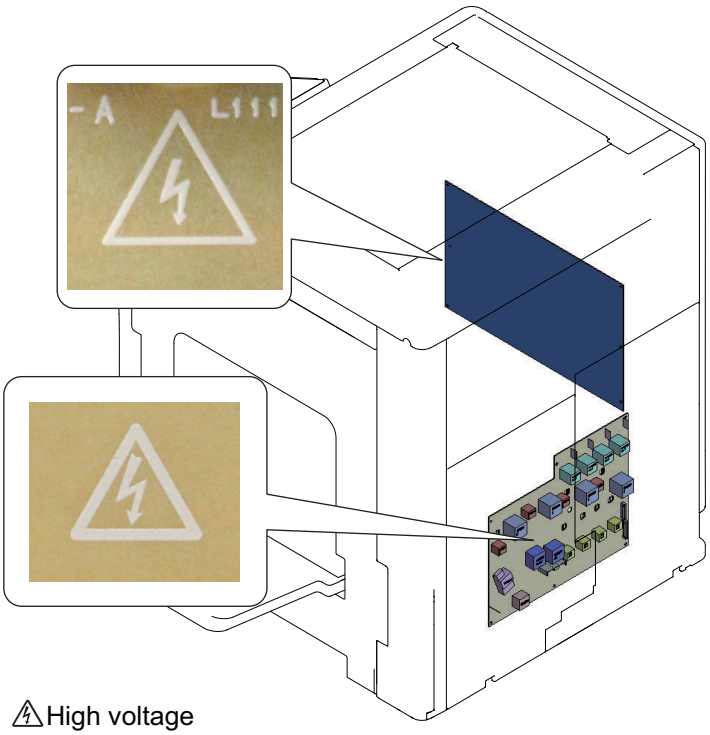


⚠High voltage

This area generates high voltage.
Be careful not to touch here when the power is turned ON to avoid getting an electric shock.

# 5. MEASURES TO TAKE IN CASE OF AN ACCIDENT

1. If an accident has occurred, the distributor who has been notified first must immediately take emergency measures to provide relief to affected persons and to prevent further damage.
2. If a report of a serious accident has been received from a customer, an on-site evaluation must be carried out quickly and KM must be notified.
3. To determine the cause of the accident, conditions and materials must be recorded through direct on-site checks, in accordance with instructions issued by KM.
4. For reports and measures concerning serious accidents, follow the regulations specified by every distributor.

# B NOTATION OF THE CONTENTS

## 1. PRECAUTION ON HANDLING THIS MANUAL

**CAUTION**

- **Use of this manual should be strictly supervised to avoid disclosure of confidential information.**

# 2. PRODUCT NAME

In this manual, each of the products is described as follows:

| | | |
|---|---|---|
| 1 | bizhub C368/C308/C258 | Main body |
| 2 | FS-534 with SD-511 | FS-534SD |
| 3 | Microsoft Windows Vista | Windows Vista |
| 4 | Microsoft Windows 7 | Windows 7 |
| 5 | Microsoft Windows 8 | Windows 8 |
| 6 | When the description is made in combination of the OS's mentioned above | Windows Vista/7/8 |

# 3. BRAND NAME

## 3.1 TRADEMARKS OF OTHER COMPANIES

- The company names and product names mentioned in this manual are the brand name or the registered trademark of each company.

## 3.2 OWN TRADEMARKS

- KONICA MINOLTA, KONICA MINOLTA logo, bizhub, and PageScope are the registered trademarks of KONICA MINOLTA, INC.
- © 2015 KONICA MINOLTA, INC.

# 4. FEEDING DIRECTION

- When the long side of the paper is parallel with the feeding direction, it is called short edge feeding. The feeding direction which is perpendicular to the short edge feeding is called the long edge feeding.
- Short edge feeding will be identified with [S (abbreviation for Short edge feeding)] on the paper size. No specific notation is added for the long edge feeding. When the size has only the short edge feeding with no long edge feeding, [S] will not be added to the paper size.

Sample notation

| Paper size | Feeding direction | Notation |
|---|---|---|
| A4 | Long edge feeding | A4 |
| | Short edge feeding | A4S |
| A3 | Short edge feeding | A3 |

# C PRODUCT SPECIFICATIONS

## 1. bizhub C368/C308/C258

### 1.1 Type

| | |
|---|---|
| Type | Desktop/console * scanner/printer |
| Control panel | 9-inch TFT color LCD WVGA (electrostatic touch panel) |
| Printing process | laser electrostatic process copying system |
| Photo conductor | OPC drum: KM-91A |
| Scanning resolution (Main scanning direction) | 600 dpi |
| Scanning resolution (Sub scanning direction) | 600 dpi |
| Exposure lamp | LED light (10W or under) |
| Original glass | Stationary (Mirror scan) |
| Original scanning | • Mirror scanning CCD optical system<br>• Sheet through system when the DF-629/DF-704 is used |
| Registration | Rear left edge |
| Paper feeding separation system (Manual bypass) | Small roller separation system with torque limiter |
| Paper feeding separation system (Tray 1) | Roller separation system with pick-up mechanism |
| Paper feeding separation system (Tray 2) | Roller separation system with pick-up mechanism |
| Exposure system (Exposing system) | • 1-beam LD exposing system |
| Exposure system (Scan system) | Polygon mirror scan system |
| Exposure resolution (Main scanning direction) | 1200 dpi |
| Exposure resolution (Sub scanning direction) | 1200 dpi |
| Developing system | HMT developing system |
| Charging system | Roller charging system |
| Neutralizing system | Red LED system |
| Image transfer system | Belt transfer system (1st)/roller transfer system (2nd) |
| Paper separating system | Combination of curvature, separating claws, and bias needle system |
| Fusing system | Belt fusing |
| Heating system | Halogen lamp |

*: Only when the optional paper feed cabinet/desk is installed.

### 1.2 Function

| | | |
|---|---|---|
| Types of original | Sheets, Books, Three-dimensional objects | |
| Max. original size | A3 or 11 x 17 | |
| Max. original weight | Max. 2 kg | |
| Multiple copies | 1 to 9999 | |
| Warm-up time (at an ambient temperature of 23° C/73.4° F and rated source voltage) | Period from the time Main Power Switch was turned on to the time this machine is ready for printing. | |
| | bizhub C368/ C308 | • 20 sec. or less |
| | bizhub C308 | • 18 sec. or less |
| | bizhub C258 | • 18 sec. or less |
| Image loss | Copy | • Leading edge: 4.2 mm (3/16 inches) (Thin Paper: 5 mm (3/16 inches))<br>• Trailing edge: 3 mm (1/8 inches)<br>• Rear edge: 3 mm (1/8 inches)<br>• Front edge: 3 mm (1/8 inches) |
| | PC print | • Leading edge: 4.2 mm (3/16 inches)<br>• Trailing edge: 4.2 mm (3/16 inches)<br>• Rear edge: 4.2 mm (3/16 inches)<br>• Front edge: 4.2 mm (3/16 inches) |
| First copy time (Tray1/2 A4 or 8 $^1/_2$ x 11, full size) | bizhub C368 | • 5.3 sec. or less (Black print)<br>• 6.9 sec. or less (Color print) |
| | bizhub C308 | • 5.6 sec. or less (Black print)<br>• 7.3 sec. or less (Color print) |
| | bizhub C258 | • 6.1 sec. or less (Black print)<br>• 7.5 sec. or less (Color print) |
| Processing speed | Plain paper (black, full color) | bizhub C368: 166.4 mm/s |
| | | bizhub C308: 145.8 mm/s |

| | | |
|---|---|---|
| | | bizhub C258: 145.8 mm/s |
| | Thick 1 to 4, Special paper | 83.2 mm/s |
| Copying speed for multi-copy cycle (A4 or 8 1/2 x 11, plain paper) | Black, Full color | bizhub C368: 1-sided: 36 sheets/min., 2-sided: 36 sheets/min. |
| | | bizhub C308: 1-sided: 30 sheets/min., 2-sided: 30 sheets/min. |
| | | bizhub C308: 1-sided: 25 sheets/min., 2-sided: 25 sheets/min. |
| Fixed zoom ratios | Full Size | ×1.000 |
| | Reduction | ×0.500, ×0.707, ×0.816, ×0.866 (Japan, Europe)<br>×0.500, ×0.647, ×0.733, ×0.785 (North America) |
| | Enlargement | ×1.154, ×1.224, ×1.414, ×2.000 (Japan, Europe)<br>×1.214, ×1.294, ×1.545, ×2.000 (North America) |
| | Zoom ratios memory | 3 memories |
| Variable zoom ratios | x0.250 to x4.000 | in 0.001 increments |
| Paper size | Tray 1 | A3 to B5, A5S, 16K, 8K<br>11×17 to $8^1/_2$×11, $8^1/_2$×11S, $5^1/_2$×$8^1/_2$S, 8×13 |
| | Tray 2 | A3 to B5, A5S, A3 Wide, SRA3, 16K, 8K<br>$12^1/_4$×12 to $8^1/_2$×11, $8^1/_2$×11S, $5^1/_2$×$8^1/_2$S, 8×13 |
| | Manual bypass tray | A3 to A6S, A3 Wide, SRA3, Postcard (100 mm×148 mm (4 inches × 6 inches)), 16K, 8K<br>$12^1/_4$×18 to $5^1/_2$×$8^1/_2$, $5^1/_2$×$8^1/_2$S, 4×6S, 8×13 |
| Copy exit tray capacity *1 | Plain paper | 250 sheets |
| | Thick paper | 10 sheets |
| | OHP film | 1 sheet |
| | Thin Paper | 100 sheets |
| External memory function | Supported external memory devices | • USB flash memory compatible with the USB (1.1/2.0) interface<br>• FAT32-formatted memory device<br>• Not including security features (Possible to turn OFF security features)<br>• Memory capacity of 32 GB or less recommended. *2<br>• A USB flash memory that appears as multiple drives on a computer cannot be used. |
| Memory capacity | Main memory | 2 GB |
| | HDD | 250 GB |

- *1: Copy exit tray has no on-board sensor to detect paper capacity.
- *2: Possible to be non-operational products.

## 1.3 Paper

| Type | | Paper source (maximum tray capacity) | | |
|---|---|---|---|---|
| | | Tray 1 | Tray 2 | Manual bypass tray |
| Copy paper type | Thin paper *1 *2 (52 to 59 g/m$^2$, 13 13/16 to 15 11/16 lb) | ○ (500 sheets) | ○ (500 sheets) | - |
| | Plain paper (60 to 90 g/m$^2$, 15 15/16 to 23 15/16 lb) | ○ (500 sheets) | ○ (500 sheets) | ○(150 sheets) |
| | Translucent paper | - | - | - |
| | OHP film *3 | - | - | ○(20 sheets) |
| | Thick 1 (91 to 120 g/m$^2$, 24 3/16 to 31 15/16 lb) | ○(150 sheets) | ○(150 sheets) | |
| | Thick 1+ (121 to 157 g/m$^2$, 32 3/16 to 41 3/4 lb) | | | |
| | Thick 2 (158 to 209 g/m$^2$, 42 to 55 9/16 lb) | | | |
| | Thick 3 (210 to 256 g/m2, 55 7/8 to 68 1/8 lb) *2 | | | |
| | Thick 4 (257 to 300 g/m2, 68 3/8 lb to 79 13/16 lb) *2 | - | - | |
| | Postcard | - | - | |
| | Envelope | - | - | ○(10 sheets) |
| | Label sheet | - | - | ○(20 sheets) |
| | Index paper | - | - | ○(20 sheets) |
| | Long size paper (127 to 210 g/m2, 33 13/16 to 55 7/8 lb) | - | - | ○(10 sheets) *5 |

| | | | | |
|---|---|---|---|---|
| Copy paper dimensions | Width | 139.7 mm to 297 mm (5 1/2 inches to 11 11/16 inches) | 139.7 mm to 320 mm (5 1/2 inches to 12 5/8 inches) | 90 mm to 320 mm (3 9/16 inches to 12 5/8 inches) |
| | Length | 182 mm to 431.8 mm (7 3/16 inches to 17 inches) | 182 mm to 457.2 mm (7 3/16 inches to 18 inches) | 139.7 mm to 12000 mm (5 1/2 inches to 472 7/16 inches) |
| | Long size paper (Width x Length) | - | - | 210 mm to 297 mm × 457.3 mm to 1200 mm (8 1/4 inches to 11 11/16 inches × 18 inches to 472 7/16 inches) *5 |

- *1: Thin paper smaller than A5 size cannot be conveyed.
- *2: Second side is an image guarantee out.
- *3: Black print only.
- *4: Only for feeding landscape oriented A4/ Letter paper and A3/ Ledger
- *5: Only for PC print mode. And MK-730 is necessary for PC print.

**NOTE**

- **OHP film, thick 4, envelope, label sheet, index paper and long size paper cannot be fed for duplex printing.**

## 1.4 Material

| Parts name | | Number of prints (Field standard yield) | Name |
|---|---|---|---|
| Toner cartridge/C | bizhub C368 | 26,000 sheets | TN324C |
| | bizhub C308 | | |
| | bizhub C258 | | |
| Toner cartridge/M | bizhub C368 | 26,000 sheets | TN324M |
| | bizhub C308 | | |
| | bizhub C258 | | |
| Toner cartridge/Y | bizhub C368 | 26,000 sheets | TN324Y |
| | bizhub C308 | | |
| | bizhub C258 | | |
| Toner cartridge/K | bizhub C368 | 28,000 sheets | TN324K |
| | bizhub C308 | | |
| | bizhub C258 | | |
| Drum unit (C/M/Y) | bizhub C368 | 90,000 sheets | DR313 |
| | bizhub C308 | 75,000 sheets | |
| | bizhub C258 | 55,000 sheets | |
| Drum unit/K | bizhub C368 | 120,000 sheets | DR313K |
| | bizhub C308 | 120,000 sheets | |
| | bizhub C258 | 90,000 sheets | |
| Developing unit/C | bizhub C368 | 600,000 sheets | DV313C |
| | bizhub C308 | 600,000 sheets | |
| | bizhub C258 | 600,000 sheets | |
| Developing unit/M | bizhub C368 | 600,000 sheets | DV313M |
| | bizhub C308 | 600,000 sheets | |
| | bizhub C258 | 600,000 sheets | |
| Developing unit/Y | bizhub C368 | 600,000 sheets | DV313Y |
| | bizhub C308 | 600,000 sheets | |
| | bizhub C258 | 600,000 sheets | |
| Developing unit/K | bizhub C368 | 600,000 sheets | DV313K |
| | bizhub C308 | 600,000 sheets | |
| | bizhub C258 | 600,000 sheets | |
| Waste toner box | bizhub C368 | 33,000 sheets | WX-103 |
| | bizhub C308 | 30,000 sheets | |
| | bizhub C258 | 30,000 sheets | |

- This machine has the field standard yield which indicates the available print numbers estimated by the quantities and usage of the unit in the market standard job mode. Number of field standard printed pages described as life value of each consumable in this manual. Yields for each preventative maintenance unit will differ depending on actual usage.

### 1.4.1 Specified conditions of field standard yield

#### (1) Japan

| Items | bizhub C368 | bizhub C308 | bizhub C258 |
|---|---|---|---|
| Printing | • 1.5 P/J (Color)<br>• 4 P/J (Black) | • 1 P/J (Color)<br>• 3 P/J (Black) | • 1 P/J (Color)<br>• 3 P/J (Black) |

| | | | |
|---|---|---|---|
| Paper size | • A4: 60 %<br>• A4S: 40 % | | |
| Color ratio | 20 % | | |
| Original density | B/W = 5 % for each color, 5 % for black | | |
| Average print volume/month | 5,800 prints/month | 3,900 prints/month | 2,600 prints/month |

### (2) North America

| Items | bizhub C368 | bizhub C308 | bizhub C258 |
|---|---|---|---|
| Printing | • 2 P/J (Color)<br>• 4 P/J (Black) | • 1.5 P/J (Color)<br>• 3 P/J (Black) | • 1.5 P/J (Color)<br>• 3 P/J (Black) |
| Paper size | • Letter: 93 %<br>• Letter S: 7 % | | |
| Color ratio | 30 % | 25 % | 25 % |
| Original density | B/W = 5 % for each color, 5 % for black | | |
| Average print volume/month | 6,800 prints/month | 5,300 prints/month | 4,100 prints/month |

### (3) Europe

| Items | bizhub C368 | bizhub C308 | bizhub C258 |
|---|---|---|---|
| Printing | • 2 P/J (Color)<br>• 4 P/J (Black) | • 2 P/J (Color)<br>• 3 P/J (Black) | • 1.5 P/J (Color)<br>• 3 P/J (Black) |
| Paper size | • A4: 93 %<br>• A4S: 7 % | | |
| Color ratio | 30 % | | |
| Original density | B/W = 5 % for each color, 5 % for black | | |
| Average print volume/month | 8,900 prints/month | 6,700 prints/month | 5,100 prints/month |

## 1.5 Print volume

- bizhub C368

| Items | | Japan | North America | Europe |
|---|---|---|---|---|
| Print volume (prints/ month) Average | Color | 1,160 prints/month | 2,040 prints/month | 2,670 prints/month |
| | Black | 4,640 prints/month | 4,760 prints/month | 6,230 prints/month |
| Print volume (prints/ month) Maximum | Color | 5,000 prints/month | 5,000 prints/month | 5,000 prints/month |
| | Black | 19,000 prints/month | 19,000 prints/month | 19,000 prints/month |

- bizhub C308

| Items | | Japan | North America | Europe |
|---|---|---|---|---|
| Print volume (prints/ month) Average | Color | 780 prints/month | 1,325 prints/month | 2,010 prints/month |
| | Black | 3,120 prints/month | 3,975 prints/month | 4,690 prints/month |
| Print volume (prints/ month) Maximum | Color | 3,000 prints/month | 3,000 prints/month | 3,000 prints/month |
| | Black | 11,000 prints/month | 11,000 prints/month | 11,000 prints/month |

- bizhub C258

| Items | | Japan | North America | Europe |
|---|---|---|---|---|
| Print volume (prints/ month) Average | Color | 520 prints/month | 1,025 prints/month | 1,530 prints/month |
| | Black | 2,080 prints/month | 3,075 prints/month | 3,570 prints/month |
| Print volume (prints/ month) Maximum | Color | 2,000 prints/month | 2,000 prints/month | 2,000 prints/month |
| | Black | 7,000 prints/month | 7,000 prints/month | 7,000 prints/month |

## 1.6 Machine specification

| | | | | | |
|---|---|---|---|---|---|
| Power requirement | Voltage: | AC 100 V | AC 110 V | AC 120 V | AC 220-240 V |
| | Current: | 15 A | 15 A | 12 A | 8 A |
| | Frequency: | 50/60 Hz | 60 Hz | 60 Hz | 50/60 Hz |
| Max. power consumption | | 1500 W | | | 1580 W |
| Dimension | 615 mm *1 (W) x 685 mm (D) x 779 mm (H) *2 (24 3/16 inches *1 (W) x 26 15/16 inches (D) x 30 11/16 inches (H) *2) | | | | |
| Space requirement | 937 mm (W) x 1,214 mm (D) x 779 mm (H) *3 (36 7/8 inches (W) x 47 13/16 inches (D) x 30 11/16 inches (H) *3) | | | | |
| Weight | Main unit | Approx. 85 kg (187 3/8 lb) (without toner cartridge) | | | |

*1: Width when the manual bypass tray is closed
*2: Height up to the original glass
*3: Manual bypass tray and the tray are pulled out

## 1.7 Operating environment

| | |
|---|---|
| Temperature | 10 to 30 ° C / 50 to 86 ° F (with a fluctuation of 10 ° C / 18 ° F or less per hour) |
| Humidity | 15 to 85 % (Relative humidity with a fluctuation of 10 %/h) |
| Levelness | Difference between front and back, right and left should be 1 degree or under. |

## 1.8 Print function

| | | |
|---|---|---|
| First print time<br>(Tray1/2, A4 or 8 1/2x11, full size) | bizhub C368 | • 5.3 sec. or less (Black print)<br>• 6.9 sec. or less (Color print) |
| | bizhub C308 | • 5.6 sec. or less (Black print)<br>• 7.3 sec. or less (Color print) |
| | bizhub C258 | • 6.1 sec. or less (Black print)<br>• 7.5 sec. or less (Color print) |
| Printing speed for multi-print cycle (A4 or 8 1/2 x 11, plain paper, Black mode, Full color mode) | bizhub C368: 1-sided: 36 sheets/min., 2-sided: 36 sheets/min. | |
| | bizhub C308: 1-sided: 30 sheets/min., 2-sided: 30 sheets/min. | |
| | bizhub C258: 1-sided: 25 sheets/min., 2-sided: 25 sheets/min. | |
| Print resolution | • Multivalued: Equivalent to 1,800 dpi in main scanning direction x 600 dpi in sub scanning direction<br>• Binary: Equivalent to 1,200 dpi in main scanning direction x 1,200 dpi in sub scanning direction | |
| Printer language | PCL5e/c Emulation, PCL 6 (XL Version 3.0) Emulation, PostScript 3 Emulation (3016), XPS ver. 1.0, BM LinksS | |
| Supported operating systems (server) | • Windows server 2003, Windows server 2003 64-bit, Windows server 2003 R2, Windows server 2003 R2 64-bit<br>• Windows server 2008, Windows server 2008 64-bit, Windows server 2008 R2<br>• Windows Server 2012, Windows Server 2012 R2 | |
| Supported operating systems (client) | • Windows Vista, Windows Vista 64-bit, Windows 7, Windows 7 64-bit, Windows 8, Windows 8 64-bit<br>• Mac OS 9.2, Mac OSX 10.2, Mac OSX 10.3, Mac OSX 10.4, Mac OSX 10.5, Mac OSX 10.5 Intel edition, Mac OSX 10.6, Mac OSX 10.7, Mac OSX 10.8<br>• Red Hat Enterprise, Linux | |
| Printer driver (PCL6) | • Windows Vista, Windows Vista 64-bit, Windows 7, Windows 7 64-bit, Windows 8, Windows 8 64-bit, Windows 8.1, Windows 8.1 64-bit<br>• Windows Server 2003, Windows Server 2003 64-bit, Windows Server 2003 R2, Windows Server 2003 R2 64-bit, Windows Server 2008, Windows Server 2008 64-bit, Windows Server 2008 R2, Windows Server 2012, Windows Server 2012 R2 | |
| Printer driver (PostScript 3) | • Windows Vista, Windows Vista 64-bit, Windows 7, Windows 7 64-bit, Windows 8, Windows 8 64-bit, Windows 8.1, Windows 8.1 64-bit<br>• Windows Server 2003, Windows Server 2003 64-bit, Windows Server 2003 R2, Windows Server 2003 R2 64-bit, Windows Server 2008, Windows Server 2008 64-bit, Windows Server 2008 R2, Windows Server 2012<br>• Mac OSX 10.6 PPD+PDE, Mac OSX 10.7 PPD+PDE, Mac OSX 10.8 PPD+PDE<br>• Red Hat Enterprise Linux PPD | |
| Printer driver (XPS) | • Windows Vista, Windows Vista 64-bit, Windows 7, Windows 7 64-bit, Windows 8, Windows 8 64-bit, Windows 8.1, Windows 8.1 64-bit<br>• Windows Server 2008, Windows Server 2008 64-bit, Windows Server 2008 R2, Windows Server 2012, Windows Server 2012 R2 | |
| Work memory | 2 GB | |
| Host interface | Ethernet 10Base-T/100Base-TX/1000Base-T, USB1.1/2.0 | |
| Built-in fonts (PCL) | European 80 fonts | |
| | Japanese: HGMinchoL, HGPMinchoL, HGGothicB, HGPGothicB | |
| Built-in fonts (PostScript 3 Emulation) | European 137 fonts | |
| | Japanese: HGMinchoL, HGGothicB | |

## 1.9 Scan function

| | |
|---|---|
| Scannable scan range | Conforms to the copy function |
| Scanning resolution | • Push: 200 dpi/300 dpi/400 dpi/600 dpi<br>• Pull: 100 dpi/200 dpi/300 dpi/400 dpi/600 dpi |
| Scanning speed | • DF-629: 80 pages/min *1<br>• DF-704: 80 pages/min *1 |
| Scanning size (scanner glass) *3 | Width 297 mm x Length 431.8 mm (Width 11 11/16 inches x Length 17 inches) (Max.) |
| Scanning size (DF)*2, *3 | • Width 297 mm x Length 1,000 mm (Width 11 11/16 inches x Length 39 3/8 inches) (Max.): 400 dpi or less<br>• Width 297 mm x Length 431.8 mm (Width 11 11/16 inches x Length 17 inches) (Max.): 600 dpi |
| Interface | Ethernet (1000Base-T/100Base-TX/10Base-T) |
| Communication protocol | TCP/IP (FTP, SMB, SMTP, WebDAV) (IPv4/IPv6) |

| | |
|---|---|
| Supported operating system | Windows Vista, Windows Vista 64-bit, Windows 7, Windows 7 64-bit, Windows 8, Windows 8 64-bit, Windows 8.1, Windows 8.1 64-bit |
| Driver | • TWAIN Driver<br>• HDD TWAIN Driver |
| Function | Scan to E-mail, Scan to SMB, Scan to FTP, Scan to WebDAV, Scan to Web service (WSD scan), TWAIN scan, Scan server sending, Panel link scan |
| Output method | TIFF, PDF, Compact PDF, PDF/A, Linearized PDF, JPEG, XPS Compact XPS, OOXML (pptx, xlsx, docx), Searchable PDF |
| Output page setting | Specified number of separate pages (1 to 999 pages), Multi page |

- *1: When an optional unit is installed
- *2: For more information of the DF specification refer to "C.2. DF-629" or "C.3. DF-704".
- *3: For more information of the FAX specification refer to "C.13. FK-514/FK-515".

## 1.10 Note for the Specifications

- These specifications are subject to change without notice.

# 2. DF-629

## 2.1 Type

| | | |
|---|---|---|
| Name | Reverse automatic document feeder | |
| Type | Document feed section | Paper feed from top of stack |
| | Document reading section | Sheet-through system |
| | Document switchback section | Switchback system |
| | Document exit section | Straight exit system |
| Installation | Screw clamp to the main body | |
| Document alignment | Center | |
| Document loading | Face up | |
| Option | Stamp unit (SP-501) | |

## 2.2 Function

| | |
|---|---|
| Mode | Standard mode, Mixed original detection mode, Scan mode/FAX mode |

## 2.3 Type of document

| | | |
|---|---|---|
| Type | Standard mode (Plain paper) | 1-sided mode: 35 to 128 g/m$^2$ (9 5/16 to 34 1/16 lb) |
| | | 2-sided mode: 50 to 128 g/m$^2$ (13 5/16 to 34 1/16 lb) |
| | Mixed original detection mode (Plain paper) *1 | 1-sided / 2-sided mode: 50 to 128 g/m$^2$ (13 5/16 to 34 1/16 lb) |
| | Scan/FAX mode (Plain paper) | 1-sided mode: 35 to 128 g/m$^2$ (9 5/16 to 34 1/16 lb) |
| | | 2-sided mode: 50 to 128 g/m$^2$ (13 5/16 to 34 1/16 lb) |
| Document size | • Standard mode<br>• Scan/FAX mode | • Japan: B6S to A3, Postcard S<br>• North America: 5 1/2 x 81/2 to 11 x 17<br>• Europe: A6S to A3<br>• Width: 100mm to 297mm<br>• Length: 139.7mm to 431.8mm (FAX transmission mode: 139.7mm to 1,000mm *2) |
| Capacity | • Standard mode<br>• Mixed original detection mode *<br>• Scan/FAX mode | • Japan: 130 sheets (68 g/m2) or stack of 12 mm and below (including paper curl)<br>• Europe: 100 sheets (80 g/m2) or stack of 12 mm and below (including paper curl)<br>• North America: 100 sheets (75 g/m2) or stack of 1/2 inches and below (including paper curl) |

- *1: For the combined original detection mode, refer to the mixed original feed chart.
- *2: For more information of the FAX specification refer to "C.13. FK-514/FK-515".

## 2.4 Particular original

- If fed, paper feed will be possible to some extent but trouble occurrence will be possible.

| Type of original | Possible trouble |
|---|---|
| Sheets lightly curled (Curled amount: 10 to 15 mm (3/8 to 9/16 inches)) *1 | Dog-eared, exit failure, transport failure |
| Thermal paper (Heat sensitive paper) | Edge folded, exit failure, transport failure |
| Paper immediately after paper exit from the main unit | Paper feed failure, transport failure |
| Paper with many punched holes (e.g., loose leaf *2, CF paper *3) | Multi-page feed due to flashes from holes |
| Folded original (including half-folded and Z-folded originals) *4 | Paper feed failure, transport failure, image distortion |
| Sheets with 2 to 4 holes | Transport failure |
| Coated paper (including inkjet paper) | Paper feed failure, transport failure |

- *1: When the original is less than 10 mm (3/8 inches) in vertical and 20 mm (13/16 inches) in horizontal direction and the amount of float of the folded original is less than 10 mm (3/8 inches), the feed and the image are guaranteed. When the amount of float of the folded original is less than 10 mm (3/8 inches), the feed and the image are guaranteed.
  *2: Limited to vertical feeding
  *3: No crease on perforation
  *4: Creases must be smoothed out. (amount of float: 15 mm (9/16 inches) or less)

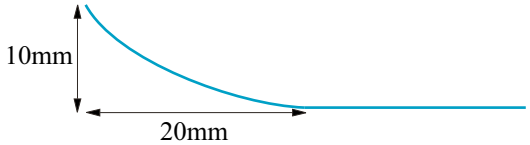

## 2.5 Prohibited original

- Prohibited originals that cause trouble

| Type of original |
|---|
| Sheets stapled or clipped together |
| Book original |
| Sheets with paper attached |
| Sheets clipped or notched |
| Torn paper |
| Original weighing less than 35 g/m$^2$ (9 5/16 lb) or 128 g/m$^2$ (34 1/16 lb) or more |
| Significantly curled original (amount of curl exceeding 15 mm (9/16 inches)) |
| OHP film |
| Label sheet |
| Offset master paper |
| Glossy photographic paper or glossy enamel paper |

## 2.6 Mixed original feed chart

| | | |
|---|---|---|
| ◎ | Same size | Tilted with in 1.5 % or less |
| ○ | Mixed original feed available | |
| × | No. mixed original feed | |
| - | Can not set original | |

### 2.6.1 For metric area

| | | | Max. original size | | | | | | | | |
|---|---|---|---|---|---|---|---|---|---|---|---|
| | | | 297 mm | | 257 mm | | 210 mm | | 182 mm | 148 mm | 128 mm |
| | | | A3 | A4 | B4 | B5 | A4S | A5 | B5S | A5S | B6S |
| Mixed original size | 297 mm | A3 | ◎ | ◎ | - | - | - | - | - | - | - |
| | | A4 | ◎ | ◎ | - | - | - | - | - | - | - |
| | 257 mm | B4 | ○ | ○ | ◎ | ◎ | - | - | - | - | - |
| | | B5 | ○ | ○ | ◎ | ◎ | - | - | - | - | - |
| | 210 mm | A4S | ○ | ○ | ○ | ○ | ◎ | ◎ | - | - | - |
| | | A5 | × | × | × | × | ◎ | ◎ | - | - | - |
| | 182 mm | B5S | × | × | ○ | ○ | ○ | ○ | ◎ | - | - |
| | 148 mm | A5S | × | × | × | × | × | × | ○ | ◎ | - |
| | 128 mm | B6S | × | × | × | × | × | × | × | ○ | ◎ |

### 2.6.2 For inch area

| | | | Max. original size | | | | | |
|---|---|---|---|---|---|---|---|---|
| | | | 11 inches | | 8 1/2 inches | | | 5 1/2 inches |
| | | | 11 x 17 | 8 1/2 x 11 | 8 1/2 x 14 | 8 1/2 x 11S | 8 1/2 x 5 1/2 | 8 1/2 x 5 1/2S |
| Mixed original size | 11 inches | 11 x 17 | ◎ | ◎ | - | - | - | - |
| | | 8 1/2 x 11 | ◎ | ◎ | - | - | - | - |
| | 8 1/2 inches | 8 1/2 x 14 | ◎ | ◎ | ◎ | ◎ | ◎ | - |
| | | 8 1/2 x 11S | ◎ | ◎ | ◎ | ◎ | ◎ | - |
| | | 8 1/2 x 5 1/2 | × | × | ◎ | ◎ | ◎ | - |
| | 5 1/2 inches | 8 1/2 x 5 1/2S | × | × | × | × | × | ◎ |

## 2.7 Machine specification

| | |
|---|---|
| Power requirement | Power supply: DC 24 V, DC 5 V (for recovering from the sleep mode) |
| | Supplying method: Supplied from the main body |
| Max. power consumption | 60 W or less |
| Dimension | 611.2 mm (W) x 503.6 mm (D) x 127.1 mm (H) (24 1/16 inches (W) x 19 13/16 inches (D) x 5 inches (H)) |
| Weight | Approx. 9.0 kg (19 13/16 lb) |

## 2.8 Operating environment

- Conforms to the operating environment of the main body.

## 2.9 Note for the Specifications

- These specifications are subject to change without notice.

# 3. DF-704

## 3.1 Type

| | | |
|---|---|---|
| Name | Reverse automatic document feeder | |
| Type | Document feed section | Paper feed from top of stack |
| | Document reading section | • Front side: Sheet-through system<br>• Back side: Reading by CIS |
| | Document exit section | Straight exit system |
| Installation | Screw clamp to the main body | |
| Document alignment | Center | |
| Document loading | Face up | |
| Option | Stamp unit (SP-501) | |

## 3.2 Function

| | |
|---|---|
| Mode | Standard mode, Mixed original detection mode, Scan mode/FAX mode |

## 3.3 Type of document

| | | |
|---|---|---|
| Type | Standard mode (Plain paper) | 1-sided mode: 35 to 163 g/m$^2$ (9 5/16 to 43 5/16 lb) |
| | | 2-sided mode: 50 to 163 g/m$^2$ (13 5/16 to 43 5/16 lb) |
| | Mixed original detection mode (Plain paper) *1 | 1-sided / 2-sided mode: 50 to 128 g/m$^2$ (13 5/16 to 34 1/16 lb) |
| | Scan/FAX mode (Plain paper) | 1-sided mode: 35 to 163 g/m$^2$ (9 5/16 to 43 5/16 lb) |
| | | 2-sided mode: 50 to 163 g/m$^2$ (13 5/16 to 43 5/16 lb) |
| Document size | • Standard mode<br>• Scan/FAX mode | • Japan: B6S to A3, Postcard S<br>• North America: 5 1/2 x 81/2 to 11 x 17<br>• Europe: A6S to A3<br>• Width: 100mm to 297mm<br>• Length: 139.7mm to 431.8mm (FAX transmission mode: 139.7mm to 1,000mm *2) |
| Capacity | • Standard mode<br>• Mixed original detection mode *<br>• Scan/FAX mode | • Japan: 130 sheets (68 g/m2) or stack of 12 mm and below (including paper curl)<br>• Europe: 100 sheets (80 g/m2) or stack of 12 mm and below (including paper curl)<br>• North America: 100 sheets (75 g/m2) or stack of 1/2 inches and below (including paper curl) |

- *1: For the combined original detection mode, refer to the mixed original feed chart.
- *2: For more information of the FAX specification refer to "C.13. FK-514/FK-515".

## 3.4 Particular original

- If fed, paper feed will be possible to some extent but trouble occurrence will be possible.

| Type of original | Possible trouble |
|---|---|
| Sheets lightly curled (Curled amount: 10 to 15 mm (3/8 to 9/16 inches)) *1 | Dog-eared, exit failure, transport failure |
| Thermal paper (Heat sensitive paper) | Edge folded, exit failure, transport failure |
| Paper immediately after paper exit from the main unit | Paper feed failure, transport failure |
| Paper with many punched holes (e.g., loose leaf *2, CF paper *3) | Multi-page feed due to flashes from holes |
| Folded original (including half-folded and Z-folded originals) *4 | Paper feed failure, transport failure, image distortion |
| Sheets with 2 to 4 holes | Transport failure |
| Coated paper (including inkjet paper) | Paper feed failure, transport failure |

- *1: When the original is less than 10 mm (3/8 inches) in vertical and 20 mm (13/16 inches) in horizontal direction and the amount of float of the folded original is less than 10 mm (3/8 inches), the feed and the image are guaranteed. When the amount of float of the folded original is less than 10 mm (3/8 inches), the feed and the image are guaranteed.
  *2: Limited to vertical feeding
  *3: No crease on perforation
  *4: Creases must be smoothed out. (amount of float: 15 mm (9/16 inches) or less)

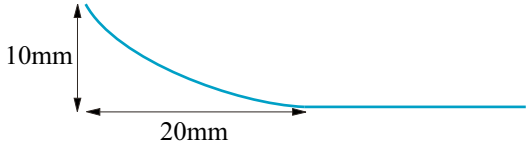

## 3.5 Prohibited original

- Prohibited originals that cause trouble

| Type of original |
|---|
| Sheets stapled or clipped together |
| Book original |
| Sheets with paper attached |
| Sheets clipped or notched |
| Torn paper |
| Original weighing less than 35 g/m$^2$ (9 5/16 lb) or 163 g/m$^2$ (43 5/16 lb) or more |
| Significantly curled original (amount of curl exceeding 15 mm (9/16 inches)) |
| OHP film |
| Label sheet |
| Offset master paper |
| Glossy photographic paper or glossy enamel paper |

## 3.6 Mixed original feed chart

| | | |
|---|---|---|
| ◎ | Same size | Tilted with in 1.5 % or less |
| ○ | Mixed original feed available | |
| × | No. mixed original feed | |
| - | Can not set original | |

### 3.6.1 For metric area

| | | | Max. original size | | | | | | | | |
|---|---|---|---|---|---|---|---|---|---|---|---|
| | | | 297 mm | | 257 mm | | 210 mm | | 182 mm | 148 mm | 128 mm |
| | | | A3 | A4 | B4 | B5 | A4S | A5 | B5S | A5S | B6S |
| Mixed original size | 297 mm | A3 | ◎ | ◎ | - | - | - | - | - | - | - |
| | | A4 | ◎ | ◎ | - | - | - | - | - | - | - |
| | 257 mm | B4 | ○ | ○ | ◎ | ◎ | - | - | - | - | - |
| | | B5 | ○ | ○ | ◎ | ◎ | - | - | - | - | - |
| | 210 mm | A4S | ○ | ○ | ○ | ○ | ◎ | ◎ | - | - | - |
| | | A5 | × | × | × | × | ◎ | ◎ | - | - | - |
| | 182 mm | B5S | × | × | ○ | ○ | ○ | ○ | ◎ | - | - |
| | 148 mm | A5S | × | × | × | × | × | × | ○ | ◎ | - |
| | 128 mm | B6S | × | × | × | × | × | × | × | ○ | ◎ |

### 3.6.2 For inch area

| | | | Max. original size | | | | | |
|---|---|---|---|---|---|---|---|---|
| | | | 11 inches | | 8 1/2 inches | | | 5 1/2 inches |
| | | | 11 x 17 | 8 1/2 x 11 | 8 1/2 x 14 | 8 1/2 x 11S | 8 1/2 x 5 1/2 | 8 1/2 x 5 1/2S |
| Mixed original size | 11 inches | 11 x 17 | ◎ | ◎ | - | - | - | - |
| | | 8 1/2 x 11 | ◎ | ◎ | - | - | - | - |
| | 8 1/2 inches | 8 1/2 x 14 | ◎ | ◎ | ◎ | ◎ | ◎ | - |
| | | 8 1/2 x 11S | ◎ | ◎ | ◎ | ◎ | ◎ | - |
| | | 8 1/2 x 5 1/2 | × | × | ◎ | ◎ | ◎ | - |
| | 5 1/2 inches | 8 1/2 x 5 1/2S | × | × | × | × | × | ◎ |

## 3.7 Machine specification

| | |
|---|---|
| Power requirement | Power supply: DC 24 V, DC 5 V (for recovering from the sleep mode), DC12V (for CIS) |
| | Supplying method: Supplied from the main body |
| Max. power consumption | 74.5 W or less |
| Dimension | 611.2 mm (W) x 503.6 mm (D) x 142.1 mm (H) (24 1/16 inches (W) x 19 13/16 inches (D) x 5 5/8 inches (H)) |
| Weight | Approx. 12.0 kg (26 7/16 lb) |

## 3.8 Operating environment

- Conforms to the operating environment of the main body.

## 3.9 Note for the Specifications

- These specifications are subject to change without notice.

# 4. PC-210/PC-110

## 4.1 Type

| | |
|---|---|
| Name | • 1 way paper feed cabinet (PC-110)<br>• 2 way paper feed cabinet (PC-210) |
| Type | Front loading type<br>• 1 way paper feed device (PC-110)<br>• 2 way paper feed device (PC-210) |
| Installation | Desk type |
| Original alignment | Center |

## 4.2 Paper

| Type | Size | Capacity | |
|---|---|---|---|
| | | Tray 3 | Tray 4 |
| Thin paper (52 to 59 g/m$^2$ (13 13/16 to 15 11/16 lb)) *1 | • A3, B4, A4S, B5S, A4, B5<br>• A5S *2<br>• Letter, LetterS, Legal, Ledger<br>• Foolscap *3<br>• 16K, 8K | 500 sheets | 500 sheets |
| Plain paper (60 to 90 g/m$^2$ (15 15/16 to 23 15/16 lb)) | | | |
| Recycled paper (60 to 90 g/m$^2$ (15 15/16 to 23 15/16 lb)) | | | |
| Thick 1 (91 g/m2 to 120 g/m2 (24 3/16 lb to 31 15/16 lb)) | | 150 sheets | 150 sheets |
| Thick 1+ (121 g/m2 to 157 g/m2 (32 3/16 lb to 41 3/4 lb)) | | | |
| Thick 2 (158 g/m2 to 209 g/m2 (42 lb to 55 5/8 lb)) | | | |
| Thick 3 (210 g/m2 to 256 g/m2 (55 7/8 lb to 68 1/16 lb)) *1 | | | |
| Copy paper dimensions | Width | 139.7 to 297.0 mm (5 1/2 to 11 11/16 inches) | |
| | Length | 182.0 to 431.8 mm (7 3/16 to 17 inches) | |

- *1: Second side is an image guarantee out.
- *2: See Invoice S for inch sizes.
- *3: There are 4 types to be selected from in the service mode; 8x13, 8.25x13, 8.5x13, 8.5x13.5.

## 4.3 Machine specification

| | | |
|---|---|---|
| Power requirement | Supplied from the main body | |
| Max. power consumption | 15 W or less | |
| Dimension | 615 mm (W) x 653 mm (D) x 304.1 mm (H) (24 3/16 inches (W) x 25 11/16 inches (D) x 12 inches (H)) | |
| Weight | PC-110 | Approx. 22 kg (48 1/2 lb) |
| | PC-210 | Approx. 24 kg (52 15/16 lb) |

## 4.4 Operating environment

- Conforms to the operating environment of the main body.

## 4.5 Note for the Specifications

- **These specifications are subject to change without notice.**

# 5. PC-410

## 5.1 Type

| | |
|---|---|
| Name | Large capacity cabinet |
| Type | Front loading type LCC |
| Installation | Desk type |
| Original alignment | Center |

## 5.2 Paper

| Type | Size | Capacity |
|---|---|---|
| Thin paper (52 to 59 g/m$^2$ (13 13/16 to 15 11/16 lb)) *1 | A4/Letter, 8 1/2 x 11 | 2,500 sheets |
| Plain paper (60 to 90 g/m$^2$ (15 15/16 to 23 15/16 lb)) | | |
| Recycled paper (60 to 90 g/m$^2$ (15 15/16 to 23 15/16 lb)) | | |
| Thick 1 (91 g/m$^2$ to 120 g/m$^2$ (24 3/16 lb to 31 15/16 lb)) | | 1,000 sheets |
| Thick 1+ (121 g/m$^2$ to 157 g/m$^2$ (32 3/16 lb to 41 3/4 lb)) | | |
| Thick 2 (158 g/m$^2$ to 209 g/m$^2$ (42 lb to 55 5/8 lb)) | | |
| Thick 3 (210 g/m$^2$ to 256 g/m$^2$ (55 7/8 lb to 68 1/16 lb)) *1 | | |

- *1: Second side is an image guarantee out.

## 5.3 Machine specification

| | |
|---|---|
| Power requirement | Supplied from the main body |
| Max. power consumption | 45 W or less |
| Dimension | 615 mm (W) x 653 mm (D) x 304.1 mm (H) (24 3/16 inches (W) x 25 11/16 inches (D) x 12 inches (H)) |
| Weight | Approx. 23 kg (50 11/16 lb) |

## 5.4 Operating environment

- Conforms to the operating environment of the main body.

## 5.5 Note for the Specifications

- **These specifications are subject to change without notice.**

# 6. LU-302

## 6.1 Type

| | |
|---|---|
| Name | 3,000 sheets Large Capacity Unit |
| Type | External option attached to the right side of the main body |
| Original alignment | Center |

## 6.2 Paper

| Type | Size | Basis weight | Capacity |
|---|---|---|---|
| Plain Paper | • Japan: A4<br>• Europe: A4<br>• North America: Letter (8 1/2 x 11) | 52 g/m$^2$ to 90 g/m$^2$ (13 13/16 lb to 23 15/16 lb) | 3,000 sheets |
| Thick 1 | | 91 g/m$^2$ to 120 g/m$^2$ (24 3/16 lb to 31 15/16 lb) | 2,500 sheets *2 |
| Thick 1+ | | 121 g/m$^2$ to 157 g/m$^2$ (32 3/16 lb to 41 3/4 lb) | 1,750 sheets *2 |
| Thick 2 | | 158 g/m$^2$ to 209 g/m$^2$ (42 lb to 55 5/8 lb) | 1,550 sheets *2 |
| Thick 3 | | 210 g/m$^2$ to 256 g/m$^2$ (55 7/8 lb to 68 1/8 lb) | 1,300 sheets *1 *2 |

- *1: Images are out of guarantee.
- *2: Excluding damp paper, curled paper, and recycled paper.

## 6.3 Machine specification

| | |
|---|---|
| Power requirement | DC 24 V, DC 5 V, DC 3.3 V (supplied from the main body) |
| Max. power consumption | 22 W or less |
| Dimension | 367 mm (W) x 528 mm (D) x 405 mm (H) (14 7/16 inches (W) x 20 13/16 inches (D) x 15 15/16 inches (H)) |
| Weight | Approx. 18.0 kg (39 11/16 lb) |

## 6.4 Operating environment

- Conforms to the operating environment of the main body.

## 6.5 Note for the Specifications

- These specifications are subject to change without notice.

# 7. JS-506

## 7.1 Type

| | |
|---|---|
| Type | Job separator with movable tray |
| Installation | Fixed at the exit section of the main body |
| Original alignment | Center |

## 7.2 Function

| | |
|---|---|
| Mode | • Non sort<br>• Sort, group<br>• Sort offset, group offset |

## 7.3 Capacity

| Exit tray | Mode | Paper size | Paper type | | Capacity |
|---|---|---|---|---|---|
| Tray 1 *1*4 | • Non sort<br>• Sort<br>• Group | • A6S, A5S, A5, B5S, B5, B6S, A4S, A4, B4, A3, A3 Wide, SRA3<br>• InvoiceS, Invoice, LetterS, Letter, Legal, Ledger, ExectiveS, Exective<br>• 16KS, 16K, 8K<br>• Postcard<br>• Custom size paper (Width: 90 mm to 320 mm (3 9/16 inches to 12 5/8 inches)/ Length: 139.7 mm to 457.2 mm (5 1/2 inches to 18 inches)) | Plain paper, Recycled paper (60 g/m$^2$ to 90 g/m$^2$ (15 15/16 lb to 23 15/16 lb)) | | 100 sheets |
| | | | Thin paper (52 g/m$^2$ to 59 g/m$^2$ (13 13/16 lb to 15 11/16 lb)) | | 50 copies |
| | | | Thick paper (91 g/m$^2$ to 300 g/m$^2$ (24 3/16 lb to 79 13/16 lb)) | | 10 sheets |
| | | | Special paper | Postcard | |
| | | | | Label sheet | |
| | | | | OHP film | |
| | | | | Index paper | |
| | | | | Envelope | |
| Tray 2 *2 | • Non sort<br>• Sort<br>• Group | • A6S, A5S, A5, B5S, B5, B6S, A4S, A4, B4, A3, A3 Wide, SRA3<br>• InvoiceS, Invoice, LetterS, Letter, Legal, Ledger, ExectiveS, Exective<br>• 16KS, 16K, 8K<br>• Postcard, Long size paper<br>• Custom size paper (Width: 90 mm to 320 mm (3 9/16 inches to 12 5/8 inches)/ Length: 139.7 mm to 1200 mm (5 1/2 inches to 47 1/4 inches)) | Plain paper, Recycled paper (60 g/m$^2$ to 90 g/m$^2$ (15 15/16 lb to 23 15/16 lb)) | | 150 sheets |
| | | | Thin paper (52 g/m$^2$ to 59 g/m$^2$ (13 13/16 to 15 11/16 lb)) | | |
| | | | Thick paper (91 g/m$^2$ to 300 g/m$^2$ (24 3/16 lb to 79 13/16 lb)) | | 20 sheets |
| | | | Special paper | Postcard | |
| | | | | Label sheet | |
| | | | | OHP film | |
| | | | | Index paper | |
| | | | | Envelope | 10 sheets |
| | | | Long size paper | | Not specified *3 |
| | • Sort offset<br>• Group offset | • B5S, B5, A4S, A4, B4, A3<br>• LetterS, Letter, Legal, Ledger, ExectiveS, Exective, 16KS, 16K, 8K<br>• Custom size paper (Width: 182 mm to 297 mm (7 3/16 inches to 11 11/16 inches) / Length: 182 mm to 431.8 mm (7 3/16 inches to 17 inches)) | Plain paper, Recycled paper (60 g/m$^2$ to 90 g/m$^2$ (15 15/16 lb to 23 15/16 lb)) | | 150 sheets |
| | | | Thin paper (52 g/m$^2$ to 59 g/m$^2$ (13 13/16 to 15 11/16 lb)) | | |
| | | | Thick paper (91 g/m$^2$ to 300 g/m$^2$ (24 3/16 lb to 79 13/16 lb)) | | 20 sheets |

- *1: 22.5 mm (7/8 inches) in stack height (stacked height is determined by a sensor)
- *2: 49.9 mm (1 15/16 inches) in stack height (no sensor detection mechanism for stacked height)
- *3: Includes falling off the tray
- *4: If either the number or height of stacked sheets reaches the specified value, “Tray paper full” is determined.

## 7.4 Offset function

| | |
|---|---|
| Exit tray | Tray 2 |
| Shift amount | 30 mm (1 3/16 inches) |

## 7.5 Machine specification

| | |
|---|---|
| Power requirement | DC 24 V ± 10 % (supplied from the main body) |
| Max. power consumption | 24 W or less |
| Dimension | Tray 1: 412.0 mm (W) x 469.0 mm (D) x 130.0 mm (H) (16 1/4 inches (W) x 18 7/16 inches (D) x 5 1/8 inches (H)) |
| | Tray 2: 451.0 mm (W) x 386.0 mm (D) x 127.0 mm (H) (17 3/4 inches (W) x 15 3/16 inches (D) x 5 inches (H)) |
| Weight | 1.5 kg (3 5/16 lb) |

## 7.6 Operating environment

- Conforms to the operating environment of the main body.

## 7.7 Note for the Specifications

- **These specifications are subject to change without notice.**

# 8. FS-533

## 8.1 Type

| | |
|---|---|
| Type | Multi staple finisher built into the main body |
| Installation | Installed in main body |
| Original alignment | Center |
| Consumable | Staples (5,000 staples / cartridge) |

## 8.2 Function

| | |
|---|---|
| Mode | • Non sort<br>• Sort, group<br>• Sort offset, group offset<br>• Sort staple |

## 8.3 Paper process ability

### 8.3.1 Non sort/sort/group

#### (1) Capacity

| Paper type | Basis weight | Max. capacity (Number of stacked sheets/Height of stacked sheets)* | |
|---|---|---|---|
| | | A4S or less | B4 or greater |
| Thin paper | 52 to 90 g/m$^2$ (13 13/16 to 23 15/16 lb) | 500 sheets / 73 mm | 250 sheets / 36 mm |
| Plain paper | | | |
| Recycled paper | | | |
| Thick 1 | 91 to 120 g/m$^2$ (24 3/16 to 31 15/16 lb) | 10 sheets / 73 mm | 10 sheets / 36 mm |
| Thick 1+ | 121 to 157 g/m$^2$ (32 3/16 to 41 3/4 lb) | | |
| Thick 2 | 158 to 209 g/m$^2$ (42 to 55 5/8 lb) | | |
| Thick 3 | 210 to 256 g/m$^2$ (55 7/8 to 68 1/8 lb) | | |
| Thick 4 | 257 to 300 g/m$^2$ (68 3/8 to 79 13/16 lb) | | |
| Postcard | 190 g/m$^2$ (50 9/16 lb) | | |
| OHP film | - | | |
| Envelope | - | | |
| Label sheet | - | | |
| Letterhead | - | | |
| Tab paper | - | | |
| Long size paper | - | Not specified | |

- *: If either the number or height of stacked sheets reaches the specified value, “Tray paper full” is determined.

#### (2) Paper size

| Type | Size |
|---|---|
| Regular size paper | • A6S, A5S, A5, B6S, B5S, B5, A4S, A4, B4, A3, A3 wide, SRA3<br>• Invoice S, Invoice, Letter S, Letter, Legal, Ledger, Exective S, Exective<br>• 16KS, 16K, 8KS, 8K<br>• Postcard S, Long size paper |
| Custom size paper | • Max.: Width 320 mm x Length 1,200 mm (Width 12 5/8 inches x Length 47 1/4 inches)<br>• Min.: Width 90 mm x Length 139.7 mm (Width 3 9/16 inches x Length 5 1/2 inches) |

### 8.3.2 Sort offset/group offset

#### (1) Capacity

| Paper type | Basis weight | Paper capacity (Number of stacked sheets/ Height of stacked sheets) * | |
|---|---|---|---|
| | | A4S or less | B4 or greater |
| Thin paper | 52 to 90 g/m$^2$ (13 13/16 to 23 15/16 lb) | 500 sheets / 73 mm | 250 sheets / 36 mm |
| Plain paper | | | |
| Recycled paper | | | |

| Paper type | Basis weight | Paper capacity (Number of stacked sheets/ Height of stacked sheets) * | |
|---|---|---|---|
| | | A4S or less | B4 or greater |
| Thick 1 | 91 to 120 g/m$^2$ (24 3/16 to 31 15/16 lb) | 10 sheets / 73 mm | 10 sheets / 36 mm |
| Thick 1+ | 121 to 157 g/m$^2$ (32 3/16 to 41 3/4 lb) | | |
| Thick 2 | 158 to 209 g/m$^2$ (42 to 55 5/8 lb) | | |
| Thick 3 | 210 to 256 g/m$^2$ (55 7/8 to 68 1/8 lb) | | |
| Thick 4 | 257 to 300 g/m$^2$ (68 3/8 to 79 13/16 lb) | | |

- *: If either the number or height of stacked sheets reaches the specified value, “Tray paper full” is determined.

**(2) Paper size**

| Type | Size |
|---|---|
| Regular size paper | • B5, A4S, A4, B4, A3<br>• Letter S, Letter, Legal, Ledger, Exective<br>• 16K, 8K |
| Custom size paper | • Max.: Width 297 mm x Length 431.8 mm (Width 11 11/16 inches x Length 17 inches)<br>• Min.: Width 210 mm x Length 182 mm (Width 8 1/4 inches x Length 7 3/16 inches) |

### 8.3.3 Sort staple

**(1) Capacity**

| Paper type | Basis weight | Max. capacity (Number of stacked sheets/Height of stacked sheets)*1 | |
|---|---|---|---|
| | | A4S or less | B4 or greater |
| Thin paper | 52 to 90 g/m$^2$ (13 13/16 to 23 15/16 lb) | • 500 sheets<br>• 50 copies<br>• 73 mm (2 7/8 lb) | • 250 sheets<br>• 30 copies<br>• 36 mm (1 7/16 lb) |
| Plain paper | | | |
| Recycled paper | | | |
| Thick 1 *2 | 91 to 120 g/m$^2$ (24 3/16 to 31 15/16 lb) | Not specified | |
| Thick 1+ *2 | 121 to 157 g/m$^2$ (32 3/16 to 41 3/4 lb) | | |
| Thick 2 *2 | 158 to 209 g/m$^2$ (42 to 55 5/8 lb) | | |

- *1: If either the number or height of stacked sheets reaches the specified value, “Tray paper full” is determined.
- *2: Thick papers can be used only in "Front Cover/ Back Cover" in Cover sheet mode.

**(2) Basis weight**

| Mode | Basis weight |
|---|---|
| Normal mode | 52 to 90 g/m$^2$ (13 13/16 to 23 15/16 lb) |
| Cover sheet mode | 52 to 209 g/m$^2$ (13 13/16 to 55 5/8 lb) (2 sheets or under for thick paper) |

**(3) Paper size**

| Type | Size |
|---|---|
| Regular size paper | • B5, A4S, A4, B4, A3<br>• Letter S, Letter, Legal, Ledger, Exective<br>• 16K, 8K |
| Custom size paper | • Max.: Width 297 mm x Length 431.8 mm (Width 11 11/16 inches x Length 17 inches)<br>• Min.: Width 210 mm x Length 182 mm (Width 8 1/4 inches x Length 7 3/16 inches) |

**(4) No. of sheets to be stapled**

| Modes | Max. No. of sheets to be stapled | |
|---|---|---|
| | A4S or less | B4 or greater |
| Normal mode | 50 sheets | 30 sheets |
| Cover sheet mode * | 48 sheets (Thin paper/ Plain paper / Recycled paper) + 2 sheets (Thick paper) | 28 sheets (Thin paper/ Plain paper / Recycled paper) + 2 sheets (Thick paper) |

- *: Thick paper can be used only in "Front Cover/ Back Cover".

### (5) Stapling position

| | |
|---|---|
| Stapling position | • Back of the corner (Parallel)<br>• Front of the corner (Parallel)<br>• Center two points (parallel) |

## 8.4 Machine specification

| | |
|---|---|
| Power requirement | DC 24 V ± 10 % (supplied from the main body) |
| Max. power consumption | 40 W or less |
| Dimension | 472.5 mm* (W) x 583.5 mm* (D) x 194.7 mm (H) (18 5/8 inches* (W) x 23 inches* (D) x 7 11/16 inches (H)) |
| Weight | 12.0 kg (26 7/16 lb) |

- *: Includes mounting part

## 8.5 Operating environment

- Conforms to the operating environment of the main body.

## 8.6 Note for the Specifications

- **These specifications are subject to change without notice.**

# 9. PK-519

## 9.1 Type

| | |
|---|---|
| Name | Punch kit |
| Type | FS-integrated type punching operation device |

## 9.2 Function

| | |
|---|---|
| Punching method | Stops and punches every paper |
| No. of holes | • Japan: 2 holes<br>• North America: 2-3 holes switching<br>• Europe: 2-4 holes switching<br>• Sweden: 4 holes |
| Supported mode | Punch mode |
| Applicable post processing mode | Sort, Group, Staple |

## 9.3 Paper

| | |
|---|---|
| Size | • B5S, B5, A4S, A4, B4, A3<br>• Letter S, Letter, Legal, Ledger, Exective S, Exective<br>• 6KS, 16K, 8K |
| Supported paper | • Thin paper (52 to 59 g/m$^2$ (13 13/16 to 15 11/16 lb))<br>• Plain paper (60 to 90 g/m$^2$ (15 15/16 to 23 15/16 lb))<br>• Thick 1 (91 to 120 g/m$^2$ (24 3/16 to 31 15/16 lb)), Thick 1+ (121 to 157 g/m$^2$ (32 3/16 to 41 3/4 lb)) |
| Punch prohibited paper | • Label paper, Tab paper, OHP film, Translucent paper, Holed paper<br>• Other paper that may interfere with the operation of the punch kit or the punch blade |

## 9.4 Machine specification

| | |
|---|---|
| Power requirement | DC 24 V (supplied from the finisher) |
| | DC 5 V (supplied from the finisher) |
| Max. power consumption | Included in the max. power consumption of finisher |
| Dimension | 110.2 mm (W) x 483.5 mm (D) x 203.2 mm (H) (4 5/16 inches (W) x 19 1/16 inches (D) x 8 inches (H)) |
| Weight | Approx. 3.2 kg (7 1/16 lb) |

## 9.5 Operating environment

- Conforms to the operating environment of the main body.

## 9.6 Note for the Specifications

- **These specifications are subject to change without notice.**

# 10. FS-534/FS-534SD

## 10.1 Type

| | |
|---|---|
| Name | Multi staple finisher |
| Type | Freestanding |
| Original alignment | Center |
| Consumable | Staples<br>• FNS section 1 cartridge (5,000 staples / cartridge)<br>• Saddle section two cartridges (5,000 staples / cartridge) |

• *: FS-534SD only

## 10.2 Function

| | |
|---|---|
| Mode | • Non sort<br>• Sort, group<br>• Sort offset, group offset<br>• Sort staple<br>• Saddle stitching (Normal mode, Cover mode, Thick paper mode)*<br>• Folding (Normal mode, Thick paper mode)*<br>• Tri-folding* |

• *: FS-534SD only

## 10.3 Paper process ability

### 10.3.1 Non sort/sort/group

#### (1) Sub tray

**NOTE**

- **Non sort only**

**(a) Paper capacity**

| Paper type | Basis weight | Max. capacity (Number of stacked sheets/ Height of stacked sheets) |
|---|---|---|
| Thin paper | 52 to 90 g/m$^2$ (13 13/16 to 23 15/16 lb) | 200 sheets /35 mm *1 |
| Plain paper | | |
| Recycled paper | | |
| Thick 1 | 91 to 120 g/m$^2$ (24 3/16 to 31 15/16 lb) | 20 sheets /35 mm *1 |
| Thick 1+ | 121 to 157 g/m$^2$ (32 3/16 to 41 3/4 lb) | |
| Thick 2 | 158 to 209 g/m$^2$ (42 to 55 5/8 lb) | |
| Thick 3 | 210 to 256 g/m$^2$ (55 7/8 to 68 1/8 lb) | |
| Thick 4 | 257 to 300 g/m$^2$ (68 3/8 to 79 13/16 lb) | |
| Postcard | 190 g/m$^2$ (50 9/16 lb) | |
| OHP film | - | |
| Envelope | - | |
| Label sheet | - | |
| Letterhead | - | |
| Index paper | - | |
| Long size paper | 127 to 210 g/m$^2$ (33 13/16 to 55 7/8 lb) | Not specified *2 |

• *1: If either the number or height of stacked sheets reaches the specified value, “Tray paper full” is determined.
• *2: Includes falling off the tray

**(b) Paper size**

| Type | Size |
|---|---|
| Regular size paper | • A6S, A5S, A5, B5S, B5, B6S, A4S, A4, B4, A3, SRA3, A3 Wide, Postcard S<br>• Invoice S, Invoice, Letter S, Letter, Legal, Ledger<br>• 16K S, 16K, 8K |
| Custom size paper | • Max.: Width 320 mm x Length 1,200 mm (Width 12 5/8 inches x Length 47 1/4 inches)<br>• Min.: Width 90 mm x Length 139.7 mm (Width 3 9/16 inches x Length 5 1/2 inches) |

### (2) Main tray

#### (a) Number of stacked sheets

| Paper type | Basis weight | Max. capacity (Number of stacked sheets/Height of stacked sheets) | | |
|---|---|---|---|---|
| | | A5/A5S or less | B5/B5S or greater, A4S or less | B4 or greater |
| Thin paper | 52 to 90 g/m$^2$ (13 13/16 to 23 15/16 lb) | • 500 sheets/ 375 mm *1<br>• 500 sheets/ 250 mm *1, *2 | • 3,000 sheets/ 375 mm *1<br>• 2,000 sheets/ 250 mm *1, *2 | 1,500 sheets/ 187.5 mm *1 |
| Plain paper | | | | |
| Recycled paper | | | | |
| Thick 1 | 91 to 120 g/m$^2$ (24 3/16 to 31 15/16 lb) | • 20 sheets/ 375 mm *1<br>• 20 sheets/ 250 mm *1, *2 | | |
| Thick 1+ | 121 to 157 g/m$^2$ (32 3/16 to 41 3/4 lb) | | | |
| Thick 2 | 158 to 209 g/m$^2$ (42 to 55 5/8 lb) | | | |
| Thick 3 | 210 to 256 g/m$^2$ (55 7/8 to 68 1/8 lb) | | | |
| Thick 4 | 257 to 300 g/m$^2$ (68 3/8 to 79 13/16 lb) | | | |
| OHP film | - | | | |
| Envelope | - | | | |
| Label sheet | - | | | |
| Letterhead | - | | | |

- *1: If either the number or height of stacked sheets reaches the specified value, “Tray paper full” is determined.
- *2: FS-534SD

#### (b) Paper size

| Type | Size |
|---|---|
| Regular size paper | • A6S, A5S, A5, B5S, B5, B6S, A4S, A4, B4, A3, SRA3, A3 Wide, Postcard S<br>• Invoice S, Invoice, Letter S, Letter, Legal, Ledger<br>• 16K S, 16K, 8K |
| Custom size paper | • Max.: Width 320 mm x Length 457.2 mm (Width 12 5/8 inches x Length 18 inches)<br>• Min.: Width 130 mm x Length 139.7 mm (Width 5 1/8 inches x Length 5 1/2 inches) |

### (3) 3rd tray

**NOTE**

- **Non sort only**

#### (a) Paper capacity

| Paper type | Basis weight | Max. capacity (Number of stacked sheets/ Height of stacked sheets)* |
|---|---|---|
| Thin paper | 52 to 59 g/m$^2$ (13 13/16 to 15 11/16 lb) | 100 sheets/ 22.5 mm |
| Plain paper | 60 to 90 g/m$^2$ (15 15/16 to 23 15/16 lb) | |
| Recycled paper | | |
| Thick 1 | 91 to 120 g/m$^2$ (24 3/16 to 31 15/16 lb) | 20 sheets/ 22.5 mm |
| Thick 1+ | 121 to 157 g/m$^2$ (32 3/16 to 41 3/4 lb) | |
| Thick 2 | 158 to 209 g/m$^2$ (42 to 55 5/8 lb) | |
| Thick 3 | 210 to 256 g/m$^2$ (55 7/8 to 68 1/8 lb) | |
| Thick 4 | 257 to 300 g/m$^2$ (68 3/8 to 79 13/16 lb) | |
| Postcard | 190 g/m$^2$ (50 9/16 lb) | |
| OHP film | - | |
| Envelope | - | |
| Label sheet | - | |
| Letterhead | - | |

- *: If either the number or height of stacked sheets reaches the specified value, “Tray paper full” is determined.

#### (b) Paper size

| Type | Size |
|---|---|
| Regular size paper | • A6S, A5S, A5, B5S, B5, B6S, A4S, A4, B4, A3, SRA3, A3 Wide, Postcard S<br>• Invoice S, Invoice, Letter S, Letter, Legal, Ledger<br>• 16K S, 16K, 8K |

| Type | Size |
|---|---|
| Custom size paper | • Max.: Width 320 mm x Length 457.2 mm (Width 12 5/8 inches x Length 18 inches)<br>• Min.: Width 90 mm x Length 139.7 mm (Width 3 9/16 inches x Length 5 1/2 inches) |

### 10.3.2 Sort offset/group offset

#### (1) Main tray

##### (a) Offset function

| | |
|---|---|
| Exit tray | Main tray |
| Shift amount | 20 mm (13/16 inches) |

##### (b) Number of stacked sheets

| Paper type | Basis weight | Max. capacity (Number of stacked sheets/Height of stacked sheets)*1 | | |
|---|---|---|---|---|
| | | less than B5 | A4/A4S, B5 | B4 or greater |
| Thin paper | 52 to 90 g/m$^2$ (13 13/16 to 23 15/16 lb) | • 500 sheets/ 375 mm<br>• 500 sheets/ 250 mm *2 | • 3,000 sheets/ 375 mm<br>• 2,000 sheets/ 250 mm *2 | 1,500 sheets/ 187.5 mm |
| Plain paper | | | | |
| Recycled paper | | | | |
| Thick 1 | 91 to 120 g/m$^2$ (24 3/16 to 31 15/16 lb) | • 20 sheets/ 375 mm<br>• 20 sheets/ 250 mm *1, *2 | | |
| Thick 1+ | 121 to 157 g/m$^2$ (32 3/16 to 41 3/4 lb) | | | |
| Thick 2 | 158 to 209 g/m$^2$ (42 to 55 5/8 lb) | | | |
| Thick 3 | 210 to 256 g/m$^2$ (55 7/8 to 68 1/8 lb) | | | |
| Thick 4 | 257 to 300 g/m$^2$ (68 3/8 to 79 13/16 lb) | | | |

- *1: If either the number or height of stacked sheets reaches the specified value, “Tray paper full” is determined.
- *2: FS-534SD

##### (c) Paper size

| Type | Size |
|---|---|
| Regular size paper | • A5, B5S, B5, A4S, A4, B4, A3, SRA3, A3 Wide<br>• Letter S, Letter, Legal, Ledger, Exective S, Exective<br>• 16K S, 16K, 8K |
| Custom size paper | • Max.: Width 320 mm x Length 457.2 mm (Width 12 5/8 inches x Length 18 inches)<br>• Min.: Width 182 mm x Length 148.5 mm (Width 7 3/16 inches x Length 5 7/8 inches) |

### 10.3.3 Sort staple

#### (1) Main tray

##### (a) Paper capacity

| Paper type | Basis weight | Max. capacity (Number of stacked copy sets/Height of stacked sheets)*1 | |
|---|---|---|---|
| | | A4S or less | B4 or less |
| • Thin paper<br>• Plain paper<br>• Recycled paper | 52 to 90 g/m$^2$ (13 13/16 to 23 15/16 lb) | • 100 copies / 375 mm<br>• 100 copies / 250 mm *2 | 100 copies / 187.5 mm |
| | | • 50 copies / 375 mm<br>• 50 copies / 250 mm *2 | 50 copies / 187.5 mm |
| | | • 30 copies / 375 mm<br>• 30 copies / 250 mm *2 | 30 copies / 187.5 mm |
| | | • 25 copies / 375 mm<br>• 25 copies / 250 mm *2 | 25 copies / 187.5 mm |
| | | • 20 copies / 375 mm<br>• 20 copies / 250 mm *2 | 20 copies / 187.5 mm |
| Thick 1 | 91 to 120 g/m$^2$ (24 3/16 to 31 15/16 lb) | • 20 copies / 375 mm<br>• 20 copies / 250 mm *2 | 20 copies / 187.5 mm |
| Thick 1+ | 121 to 157 g/m$^2$ (32 3/16 to 41 3/4 lb) | | |
| Thick 2 | 158 to 209 g/m$^2$ (42 to 55 5/8 lb) | | |

- *1: A "tray paper full" condition is determined to exist when either the number of stacked copy sets or the height of stacked sheets reaches a predetermined value.
- *2: FS-534SD

**(b) Paper size**

| Type | Size |
|---|---|
| Regular size paper | • A5, B5S, B5, A4S, A4, B4, A3<br>• Letter S, Letter, Legal, Ledger, Exective S, Exective<br>• 16K S, 16K, 8K |
| Custom size paper | • Max.: Width 297 mm x Length 431.8 mm (Width 11 11/16 inches x Length 17 inches)<br>• Min.: Width 182 mm x Length 148.5 mm (Width 7 3/16 inches x Length 5 7/8 inches) |

**(c) No. of sheets to be stapled**

| Modes | Max. No. of sheets to be stapled |
|---|---|
| Normal mode* | • Thin paper / Plain paper / Recycled paper: 50 sheets<br>• Thick 1: 30 sheets<br>• Thick 1+/ Thick 2: 15 sheets |
| Cover sheet mode | 48 sheets (Thin paper/ Plain paper / Recycled paper) + 2 sheets (Thick paper) |

- *: Maximum stapling sheets/ copies for printing high image density is 20 x 20 copies.

**(d) Stapling position**

| Stapling position | Paper size |
|---|---|
| Back/Front of the corner (45 degree) | • A4, A3, B5, B4<br>• Letter, Ledger |
| Back/Front of the corner (Parallel) | • A4S, B5S, A5<br>• Letter S, Legal |
| Side: Parallel 2 point | • A4S, A4, A3, B5S, B5, B4, A5<br>• Letter S, Letter, Legal, Ledger |

### 10.3.4 Saddle stitching/folding

**NOTE**

- **FS-534SD saddle tray only**

| | |
|---|---|
| Supported paper in saddle stitching/ folding | • Thin paper (52 g/m2 to 59 g/m2 (13 13/16 lb to 15 11/16 lb))<br>• Plain paper (60 g/m2 to 90 g/m2 (15 15/16 lb to 23 15/16 lb))<br>• Thick 1 (91 g/m2 to 120 g/m2 (24 3/16 lb to 31 15/16 lb)) *1, *2<br>• Thick 1+ (121 g/m2 to 157 g/m2 (32 3/16 lb to 41 3/4 lb)) *1, *2<br>• Thick 2 (158 g/m2 to 209 g/m2 (42 lb to 55 5/8 lb)) *1, *2 |
| Supported paper sizes | • A4S, B4, A3, A3 Wide, SRA3<br>• Letter S, Legal, Ledger<br>• 8K<br>• Custom size paper (Width: 210 mm to 320 mm (8 1/4 inches to 12 5/8 inches), Length: 279.4 mm to 457.2 mm (11 inches x 18 inches)) |
| Supported mode and basis weight | • Normal mode: 52 g/m2 to 90 g/m2 (13 13/16 lb to 23 15/16 lb)<br>• Cover mode: 52 g/m2 to 209 g/m2 (13 13/16 lb to 55 5/8 lb) *3<br>• Thick paper mode: 91 g/m2 to 209 g/m2 (24 3/16 lb to 55 5/8 lb) |
| Number of sheets stacked on the saddle tray | • 1 sheet to 3 sheets: 20 copies<br>• 4 sheets to 10 sheets: 10 copies<br>• 11 sheets to 20 sheets: 5 copies |
| Number of stitching sheets | • Normal mode: 2 sheets to 20 sheets (maximum 80 pages)<br>• Cover mode: 2 sheets to 20 sheets (maximum 80 pages) *4 |
| Stapling position | Saddle stitching (2 staples) |
| Number of folding sheets | • Normal mode: 5 sheets<br>• Thick paper mode: 1 sheet |

- *1: For saddle stitching, available only with 1 cover sheet of cover mode
- *2: For folding, available only with 1 cover sheet
- *3: Use only 1 sheet as a cover sheet for cover mode
- *4: Cover sheet : 1 sheet (52 g/m2 to 209 g/m2 / 13 13/16 lb to 55 5/8 lb) + body page: 19 sheets (52 g/m2 to 90 g/m2 / 13 13/16 lb to 23 15/16 lb)

### 10.3.5 Tri-folding

**NOTE**

- **FS-534SD saddle tray only**

| | |
|---|---|
| Supported paper in tri-folding | • Thin paper (52 g/m2 to 59 g/m2 (13 13/16 lb to 15 11/16 lb))<br>• Plain paper (60 g/m2 to 90 g/m2 (15 15/16 lb to 23 15/16 lb)) |
| Supported paper sizes | • A4S<br>• LetterS<br>• 16KS |
| Number of tri-folding sheets and copies * | • 1 sheet folding: 30 copies<br>• 2 sheet foldings: 10 copies<br>• 3 sheet foldings: 10 copies |

- *: Up to 3 sheets in tri-folding

## 10.4 Machine specification

| | |
|---|---|
| Power requirement | DC 24 V ± 10 % (supplied from the main body) |
| Max. power consumption | 56 W or less |
| Dimension | • 528 mm (W) x 641 mm (D) x 1,023 mm (H) (20 13/16 inches (W) x 25 1/4 inches (D) x 40 1/4 inches (H))<br>• 658 mm (W) x 641 mm (D) x 1,065 mm (H) (25 7/8 inches (W) x 25 1/4 inches (D) x 41 15/16 inches (H)) * 1 |
| Weight | • 40.0 kg (88 3/16 lb)<br>• 64.0 kg (141 1/8 lb) *2 |

- *1: Size when the paper output tray is pulled out
- *2: FS-534SD

## 10.5 Operating environment

- Conforms to the operating environment of the main body.

## 10.6 Note for the Specifications

**NOTE**

- **These specifications are subject to change without notice.**

# 11. PK-520

## 11.1 Type

| | |
|---|---|
| Name | Punch kit |
| Type | FS-integrated type punching operation device |

## 11.2 Functions

| | |
|---|---|
| Punching method | Stops and punches every paper |
| No. of holes | • Japan: 2 holes<br>• North America: 2-3 holes switching<br>• Europe: 2-4 holes switching<br>• Sweden: 4 holes |
| Supported mode | Punch mode |
| Applicable post processing mode | Sort, Group, Staple |

## 11.3 Paper

| | |
|---|---|
| Size | • B5S, B5, A4S, A4, B4, A3<br>• Letter S, Letter, Legal, Ledger, Exective S, Exective<br>• 16KS, 16K, 8K |
| Supported paper | Conforms to the operating environment of the main body.<br>• Thin paper (52 g/m$^2$ to 59 g/m$^2$ (13 13/16 lb to 15 11/16 lb))<br>• Plain paper (60 g/m$^2$ to 90 g/m$^2$ (15 15/16 lb to 23 15/16 lb))<br>• Thick 1 (91 g/m$^2$ to 120 g/m$^2$ (24 3/16 lb to 31 15/16 lb))<br>• Thick 1+ (121 g/m$^2$ to 157 g/m$^2$ (32 3/16 lb to 41 3/4 lb))<br>• Thick 2 (158 g/m$^2$ to 209 g/m$^2$ (42 lb to 55 5/8 lb))<br>• Thick 3 (210 g/m$^2$ to 256g/m$^2$ (55 7/8 lb to 68 1/8 lb))<br>• Thick 4 (257 g/m$^2$ to 300g/m$^2$ (68 3/8 lb to 79 13/16 lb)) |
| Punch prohibited paper | • Label paper, Tab paper, OHP film, Translucent paper, Holed paper<br>• Other paper that may interfere with the operation of the punch kit or the punch blade |

## 11.4 Machine specification

| | |
|---|---|
| Power requirement | DC 24 V (supplied from the finisher) |
| | DC 5 V (supplied from the finisher) |
| Max. power consumption | Included in the max. power consumption of finisher |
| Dimension | 61 mm (W) x 492 mm (D) x 142 mm (H) (2 3/8 inches (W) x 19 3/8 inches (D) x 5 9/16 inches (H)) |
| Weight | Approx. 1.8 kg (3 15/16 lb) |

## 11.5 Operating environment

- Conforms to the operating environment of the main body.

## 11.6 Note for the Specifications

- **These specifications are subject to change without notice.**

# 12. CU-101

## 12.1 Type

| | | |
|---|---|---|
| Name | Clean unit | |
| Type | Exhaust scrubber | |
| Suction system | Dual inline fan + suction fan (MK-745) | |
| Trapping system | UFP trap | UFP filter |
| | Deodorant trap | Deodorant filter |
| UFP collection efficiency | UFP filter collection capacity: More than 99 % | |
| Maximum suction air volume | 0.8 $m^3$/min (Avg. flow velocity: 0.1 m/sec) | |
| Exhaust direction | Exhaust downflow | |

## 12.2 Machine specification

| | |
|---|---|
| Power requirement | DC 24 V (supplied from the main body) |
| Max. power consumption | 12 W or less (CU-101 + MK-745) |
| Dimension | 450 mm (W) x 106 mm (D) x 320 mm (H)<br>17 11/16 inch (W) x 4 3/16 inch (D) x 12 5/8 inch (H) |
| Weight | Approx. 2.0 kg (4 7/16 lb) |

## 12.3 Operating environment

- Conforms to the operating environment of the main body.

## 12.4 Note for the Specifications

- **These specifications are subject to change without notice.**

# 13. FK-514/FK-515

## 13.1 Basic specifications

### 13.1.1 General specifications

| | | |
|---|---|---|
| Applicable lines | PSTN, PBX | |
| Protocol | Group 3 (compliant to ITU-T T.30)<br>• ECM<br>• F-code communication<br>• Konica Minolta non-standard protocol: No<br>• Group 4: No | |
| Maximum data rate | 33,600 bps | |
| Coding method | • MH<br>• MR<br>• MMR<br>• JBIG | |
| Modulation method | • V.27ter<br>• V.29<br>• (V.33): V.33 is for reception only.<br>• V.17<br>• V.8<br>• V34 | |
| Communication resolution | Normal | 8 x 3.85 lines / mm |
| | Fine | • 8 x 7.7 lines / mm<br>• 200 x 200 pixels / inch |
| | Super fine | • 8 x 15.4 lines / mm (Reception only)<br>• 16 x 15.4 lines / mm<br>• 400 x 400 pixels / inch |
| | Ultra fine | 600 x 600 pixels / inch |
| | • Fixed to mm at transmission (except 600 dpi)<br>• mm and inch are available at reception.<br>• Selection by using the [Resolution] key.<br>• You can not change settings on every page. | |
| Fax memory size | • 128 GB (128 GB in the main body HDD 250 GB is used as a memory.)<br>• 10000 pages can be stored including all Scan/Box/Printer/Fax documents. | |
| FAX memory backup | Image data is saved in HDD. | |
| Multiple line connection | Four lines can be connected by installing four fax kit. (FK-511 x 2units and FK-508 x 2units) | |
| Communication time | Level of 2 seconds (Konica Minolta standard A4 chart, 33,600 bps) | |
| Resolution conversion | At sending:<br>• Scanner: inch<br>• Density conversion: inch -> mm<br>• Communication: mm / inch (600 dpi only) | |
| | At receiving (mm):<br>• Density conversion: mm -> inch<br>• Print: inch | |
| | At receiving (inch):<br>• Density conversion: inch -> inch<br>• Print: inch | |

### 13.1.2 Scanning section

| | | |
|---|---|---|
| Scanning method | Platen documents | Impossible to scan book documents (book mode) |
| | DF book documents | • Scanning mode: 1-Sided, 2-Sided and cover + 2-Sided<br>• Possible to scan the DF mixed size documents. |
| Scanning resolution | Normal | 8 x 3.85 lines / mm |
| | Fine | 8 x 7.7 lines / mm |
| | Super fine | 16 x 15.4 lines / mm |
| | Ultra Super fine | 600 x 600 dpi |
| | • Selection by using the [Resolution] key.<br>• You can not change settings on each page. | |
| Mixed original | Possible to mix documents of different sizes.<br>• After rotation of images, sizes are changed by EOM every time the length of the scan line is changed at sending.<br>• Possible to mix sizes (A and B). | |
| Density selection | Selection by using the [Density] key. [Light] / [Standard] / [Dark]<br>• You can not change settings on each page. | |
| Maximum scanning document width | 297 mm (A3 width) both for DF and Platen | |
| Maximum scanning document length | Regular mode | • 431.8 mm<br>• 17 inches |

| | | |
|---|---|---|
| | Long original mode | • 1000 mm<br>• Originals with unlimited length are not available. |
| Effective scanning range | When a document is smaller than the effective scanning area, the area outside the document is erased.<br>• DF scanning: left, right, head and bottom mask of 3mm each (0 to 5mm)<br>• Platen scanning: left, right and head mask of 2mm each (fixed) | |
| Automatic reduction at sending | A3 -> B4, A3 -> A4 and B4 -> A4<br>• Automatically reduced and sent in accordance with the recording paper size of remote station. | |
| Rotation transmission | A4 / Letter size only. LEF documents are rotated by 90 degrees at sending to send it in SEF direction. | |
| Page division at sending | No | |
| Halftone | 256 level error diffusion<br>• Users can change settings by using the [Text], [Text/Photo, Printed] , [Text/Photo, PhotoPaper], [Photo, Printed] , [Photo, PhotoPaper], [Dot Matrix Original] or [Copied Paper] key. | |
| Automatic background control (ABC) | Yes | |
| Finished stamp | Yes | |
| Scanning time | 80 sheets/min (When DF is installed, letter (81/2 x 11) or A4, scanning, 300dpi) | |

### 13.1.3 Recording section

| | |
|---|---|
| Recording | Laser electrostatic printing system |
| Recording paper size | • All sizes except for B6 and Postcard (See the copier basic specifications.)<br>• Auto recording paper selection<br>• Note: A5 and B5 paper is used only for A5 and B5 reception respectively |
| Recording paper cassette | • Tray 1 to Tray 4<br>• Manual bypass tray<br>• LCT |
| Staple | No |
| Recording speed | Compliant to the copier standards |
| Recording size | A3 size maximum<br>• A3 fix as reception record ability declaration in protocol. |
| Maximum reception length | 1000 mm<br>• In case of being larger than the maximum reception length, a communication error occurs.<br>• When the memory over occurs during reception, the received data is printed. |
| Reduction record | When the received image information is larger than the recording paper, it is automatically reduced to the recording paper size and recorded. |
| Page separation record | Yes |
| Offset output at each communication | Yes (Job unit reception only) |
| Rotation reception | Yes<br>• Images are rotated by 90 degrees and recorded on the recording paper in LEF direction. |
| Two-sided reception | Yes (Utility Mode) |
| 2-in-1 reception | No |
| Smoothing | Yes (at converting the resolution) |
| Print/Fax output settings | Yes |
| Bypass print | Possible to use as an active tray in auto selection mode. |
| Total page counter | Yes |
| Monitor print | No (copy at sending) |

### 13.1.4 Line connecting section

| | |
|---|---|
| NCU type | A-A~, line control by silicon DAA |
| Connecting terminal | RJ11 |
| Modem | Matsushita MMD-5020 |
| Modem sending level | -10 to -15 dBm (Country spec) |
| DTMF sending level | -10 to -15 dBm (Country spec) |
| Receiving sensitivity | • G3 reception: up to -48 dB<br>• Tone reception: up to -52 dB |
| Dialing signal | DP (10pps) and DTMF |

### 13.1.5 Control panel section

| | | |
|---|---|---|
| FAX / copy / scan / box | Mode switching | by panel key selection<br>• Possible to change modes during an operation of each mode.<br>• No mode return by the auto reset. |
| | Initial screen after power-on | Screen at power off or facsimile screen.<br>(depending on parameter setting) |

| | |
|---|---|
| Interruption during scanning | When pressing the interrupt key while scanning documents to be transmitted, INTERRUPT LED blinks. Copy screen appears after scanning is completed. |
| Interruption during recording in the FAX mode screen | Operations by using the interrupt key are invalid. |
| FAX start | by using the start key. |
| Stop | by using the stop key.<br>• Possible to appoint to stop from the job list so as to stop during operations of the multi jobs. |
| FAX free memory display | RDH memory<br>• % indication on LCD during scanning, recording and stand-by.<br>File memory (RAM disk/HDD)<br>• Display in the JOB LIST screen |
| File existence indication | In the following cases, the data Indicator (LED) on the control panel lights up.<br>• Upon reception of FAX<br>• When a document is saved in the bulletin board box, polling TX box, and memory RX user box. |
| Display during the FAX communications | No display by LCD panel icon.<br>Icons are displayed on the FAX waiting screen and the FAX operation screen. |
| Error display | Displayed by LCD panel |
| Time display | Date and time displayed.<br>• Present time is displayed on the sub-area. |
| Remote station ID display | Yes<br>• The TSI/CSI display during communications |
| Other operation keys | [Application] key: Moves to the FAX application function setting screen.<br>• Check Setting key: Valid<br>• */# button: Yes<br>• Help button: Yes |

## 13.2 Functional specification

### 13.2.1 Dial functions

| | |
|---|---|
| Abbreviated dial | Yes<br>• Possible to register 2000 stations. (1000 with no HDD installed)<br>• 38 digits maximum<br>• Possible to search the remote station list in the order of abbreviation numbers and Indexes.<br>• The registration names must be 24 digits or less.<br>• Registration name auto registration function: No<br>• Second FAX No. registration function: No<br>• Impossible to register the communication mode.<br>• Possible to register Line Setting (Overseas TX, ECM Off, V.34 OFF, check destination, line selection (Only with four fax kit installed)).<br>• There is no registration function provided of [Scan Setting], [Comm. Setting] except the line setting. |
| Program dial | 400 dials (200 with no HDD installed) |
| Key pad dial | 38 digits maximum |
| Group dial | Up to 100 groups. Possible to register group names. Up to 500 remote stations per each group by abbreviated numbers only. |
| Dialing of multiple remote stations | 605 remote stations maximum (abbreviated 500 + key pad 100 + manual input e-mail destination 5) |
| Manual redial | Yes<br>• Possible to select from five latest histories. |
| Automatic redial | Yes<br>• Automatically redial when remote stations are busy or return no responses or transmission errors occur at the memory transmission<br>• Possible to receive during redial waiting.<br>• Another call is possible. (Not possible when there are two redial waiting jobs.) |
| JOB LIST redial | No |
| Pulse/tone switching | Possible to switch by using the [*] key on the key pad or [Tone] key on the Direct Input screen. |
| PBX mode setting | Yes<br>• Possible to turn ON or OFF the PBX connection and to register the external access code.<br>• There is the automatic removal function of external access code to registered abbreviated remote station No. Nothing is automatic addition function. |
| Pseudo off-hook | Yes<br>• The manual start is possible by using the pseudo off-hook.<br>• [Off-Hook] key on LCD |
| Call progress detection | DC loop (Depends on country spec).<br>• Dial tone (Ditto)<br>• Busy tone (Ditto)<br>• Second dial tone (Ditto) |
| Dial parameters | Dialing signals DP (10 pps) and DTMF (Depends on country spec)<br>• Pause between digits1 to 7 seconds (Users cannot set.)<br>• Pause between digits 3 seconds (fixed) |

| | |
|---|---|
| Phone book dial (Abbr) | Yes<br>• After appointing character to search, use up and down cursor keys. |
| External phone connection jack | Yes<br>• Depends on specifications of each country. |

### 13.2.2 Transmission

| | | | |
|---|---|---|---|
| Timer transmission | 24-hour (max.) timer setting is possible. (one station, sequential multi-stations transmission) | | |
| Batch transmission | No | | |
| Timer polling | 24-hour (max.) timer setting is possible. (one remote station polling and sequential polling reception) | | |
| No. of timers | 21 transmissions and pollings in total. The number of sequential pollings is one. | | |
| Memory transmission reservation | The memory transmission reservation is possible during communications. (memory registration of the DF memory transmission and platen memory transmission documents) | | |
| DF transmission reservation | No | | |
| Fold erase transmission | No | | |
| Frame erase transmission | Yes<br>• Platen documents and book documents<br>• DF documents are possible as well.<br>• The regular mode only | | |
| Automatic layout transmission (Outside documents are erased.) | No | | |
| Reverse-image transmission | No | | |
| 2in1 transmission | No | | |
| Book transmission | No | | |
| Scanning size appointment | Yes<br>• Scans documents in the appointed size irrelevant to document sizes and sends them. Transmits documents in the appointed scanning width and length at the platen transmission and the DF transmission.<br>• The effective image area is based on the center in the DF transmission. (Corner-base scanning in mixed-size document mode.) | | |
| Document image quality appointment | Yes<br>• Selected from [Text], [Text/Photo, Printed] , [Text/Photo, PhotoPaper], [Photo, Printed] , [Photo, PhotoPaper], [Dot Matrix Original] or [Copied Paper]. | | |
| Multi-stations | 605 stations maximum (Abbr dial x 500 stations, keypad dial x 100 stations and E-Mail x 5)<br>The timer appointment is possible. | | |
| Memory transmission | The default is the memory transmission (△: Only the communication mode is possible) | | |
| | Quick memory transmission | DF transmission | ○ |
| | | Platen transmission | One page only |
| | | Mixture of DF/platen documents | × |
| | | Advanced communication function | △<br>Only the communication mode is possible |
| | | Manual transmission | ○ |
| | | Transmission when the printer is active | × |
| | Memory transmission | DF transmission | ○ |
| | | Platen transmission | ○<br>After the Separate Scan setting, the setting is read with the [Start] key and the communication is started up with the [Finish] key. |
| | | Mixture of DF/platen documents | ○<br>After the Separate Scan setting, the setting is read with the [Start] key and the communication is started up with the [Finish] key. |
| | | Advanced communication function | ○ |
| | | Manual transmission | × |
| | | Transmission when the printer is active | ○ |
| Forwarding transmission | Yes<br>• Automatic forward: Automatic forward of received documents to remote stations registered in advance.<br>• Manual forward: No | | |
| Interruption transmission | Single station transmission reservation automatically interrupts between stations of multiple station communications. | | |
| International communication | Yes | | |

| | |
|---|---|
| | • When the remote station is V17, communications start at TCM 7,200 bps. When the remote station is V34, they start at 28,800 bps. |
| V34-off transmission | Transmitted without V34 mode. The V34-off appointment can be registered in the abbreviated / program dials.<br>This is used when the transmission error code related to V34 occurs frequently. |
| Long original transmission | Yes |
| DF irregular-size transmission | Possible to transmit irregular-size originals from DF. The main scanning is the max. document width set on DF, and the sub scanning depends on document length.<br>• Width: 297 mm/11.69 inch at the maximum<br>• Length: 1000 mm/39.37 inch at the maximum |
| Incomplete TX hold | Yes |
| Instant batch transmission (Bundled transmission) | No |
| Confidential transmission | Transmission to the confidential BOX of a remote station by using the F code (SUB/SID).<br>Appoints the confidential BOX No. by using SUB. Set the communication password using SID as required. |
| Relay request | The relay request by using the F-code (SUB/SID).<br>Appoints the relay BOX No. by using SUB. |
| Relay transmission | No |
| Transmission error prevention | • Check destination: When transmitting, compares the FAX No. specified with the FAX No. information (CSI) of the remote station and transmits only when both numbers are the same.<br>• Destination check display function: When transmitting, displays the list of addresses to allow to check the address again and then transmit.<br>• Restrict FAX broadcasting: Prohibits to specify multiple addresses for FAX transmission. |
| Confirm Address (at calling and registration) | During direct dialing, call is initiated only if the destination number inputted a first time matches with that inputted a second time. |

### 13.2.3 Polling

| | |
|---|---|
| Polled transmission | • There is one documents which allows the transmission setting.<br>• Documents are deleted after transmission.<br>• No additional scanning of documents.<br>• No DF polled transmission reservation. |
| Polling reception | The sequential polling is possible.<br>600 stations maximum (abbreviated dial x 500 stations and key pad dialing x 100 stations) |
| Call turnaround polling | No |
| Called turnaround polling | Yes |
| Closed polling transmission | No |
| Selective polling | Transmission and reception.<br>• The selective polling by using the F-code (SEP).<br>• There is a bulletin board BOX polling reception.<br>• No confidential BOX polling transmission. |

### 13.2.4 Line seizure mode and telephone function

| | |
|---|---|
| Line seizure mode switching | Possible to set the automatic reception and the manual reception.<br>• When the memory is full and there are no polling transmission reservations, the automatic reception mode is cancelled.<br>• No switching of the auto / manual mode by appointing data and time. |
| Ans. Machine mode | Yes<br>• At the time of the CNG detection with the external phone off hook, a line is caught to start reception. |
| Automatic reception mode | Time and the number of rings.<br>• No. of rings: 0 to 15 times (country spec)<br>• Time: 0 to 15 secs (country spec) |
| Hold | No |
| Handset | No |
| One-piece phone | Country spec |
| Call to external telephone | No |
| Conversation reservation | No |

### 13.2.5 Message reception and record

| | |
|---|---|
| Confidential reception | Reception at the confidential BOX appointed at the F-code (SUB).<br>When a transmission password (SID) has been set for the confidential box, the SID should be specified as the communication password.<br>At the time of printing documents received at the confidential BOX, a password to access to the confidential BOX is required. |
| Closed reception | Closed reception by using the SID (PWD) (Junk FAX) |

| | |
|---|---|
| Adaptive (automatic) reduction | 87 to 96 % in steps of 1 %<br>Becomes the adaptive reduction when “Print Separate Fax Pages = OFF” is selected. In case of the adaptive reduction, if the reception image size is a little bigger than recording paper, the size is automatically reduced so that it becomes within the recording paper size and is recorded. |
| Fixed reduction | No |
| Page separation record | Yes. Does not overlap at the division. |
| Equal size recording | Records the received image at an equal size.<br>When the reception size is larger than A3 form, excessive image is destructed. |
| Cassette selection | Appropriate paper size auto selection<br>• When paper is running out, paper is provided from another cassette with the same size of paper.<br>• Tray-fix mode available |
| 2-in-1 reception | No |

### 13.2.6 Memory function

| | |
|---|---|
| Display of used memory space | Yes (Fax screen: RDH memory) |
| Memory RX | A password is required for printing received files. The password (up to 8 digits) is set when the memory RX mode is set in the utility mode.<br>First page can be printed. |
| Memory substitute reception | Yes (when there is no paper / no toner) |

### 13.2.7 Various communication function

| | |
|---|---|
| Short protocol | No |
| ECM | Yes<br>• Frame size: 64 byte / 256 byte |
| Communication timer | Yes<br>• 24 hours maximum. 21 including one for sequential polling timer. |
| Redial waiting | Five redial timers maximum |
| Error page resending | No (becomes the error page redial.) |
| Error page redial | Effective to both quick memory transmission and memory transmission. Redial and retransmission in case of RTN or comm error.<br>• Redial interval: follows the busy redial interval.<br>• Num. of redials: 0 to 7 times (different counter from the busy redial) |
| Total page number print | Yes<br>• Automatic print to the TTI in memory transmission.<br>• Added when the number of document pages is appointed for quick memory transmission. |
| Header memo | No |
| TTI (Transmitting terminal ID) | Yes<br>• 30 characters maximum<br>• Added not to the original read image, but to the top of the transmission image while in the image rotation being specified.<br>• The registration of up to 20 sender names is available.<br>• It is possible to make a selection to decide whether or not the address is printed at the header position. |
| RTI (Receiving terminal ID) | Yes<br>• After processing the enlargement and/or reduction operations, a record is made at the bottom position specified before conducting an image rotation.<br>• Date, time and page no. are recorded. |
| Fax remote diagnosis | Yes |
| MH fix | Yes. Setting can be made from the service mode. |
| Document insertion after dialing | Yes<br>• Document insertion is possible after dialing. Starts calling by using the [Start] button. |
| Communication history | Yes<br>• The last 700 communication histories are recorded in the communication journal. |
| Electronic key counter | Yes<br>• The number of transmitted pages to each user. Limit control is not done. |
| Key counter | Yes |
| Coin vendor | Yes (Support timing varies depending on models.)<br>• It is possible to use with FAX. |

### 13.2.8 User lists / reports

| | |
|---|---|
| Activity report | • The total of 700 communications (sending and reception) can be recorded.<br>• Automatic output: Daily / Every 100 Comm. / 100/ Daily<br>• Manual output: Yes |
| Timer Reservation TX Report | Automatic output: Users can turn ON / OFF. |
| TX result report | • Automatic output (ON / If TX Fails / OFF)<br>• Possible to output with images |

| | |
|---|---|
| Sync transmit reservation report | Automatic output: Users can turn ON / OFF. |
| Broadcast result report | |
| Polled Tx reserve report | |
| Polled Tx result report | |
| Polled Rx result report | |
| Sequential poll, Rx reservation report | |
| Sequential poll, Rx result report | |
| An address polling Rx reserved report | |
| Relay TX Result Report | |
| Relay Request Report | |
| PC-Fax TX Error Report | |
| Address Book List | Manual output (numeric order: output to be produced for each destination type) |
| Program List | Manual output |
| Group List | |
| Fax Setting List | |
| Bulletin TX Report | Automatic output: Users can turn ON / OFF. |
| Confidential RX Report | Auto output at the F code confidential reception. Automatic output: Users can turn ON / OFF. |
| Subject/Text list | Manual output |

### 13.2.9 Other user functions

| | |
|---|---|
| Fax ID | Number ID: 20 digits (max.) |
| Header note | No |
| Language Selection | Yes |

## 13.3 Network fax specification

### 13.3.1 Internet Fax

| | | |
|---|---|---|
| Image memory capacity | 128 GB (128 GB of 250 GB of the hard disk is used as a memory.) | |
| Max. no. of stored pages | Approx. 10000 pages<br>(numbers of pages in the case of storing standard A4-size pages containing approximately 700 characters at “fine” resolution) | |
| Scanning line density | Ultra fine | 600 dpi x 600 dpi |
| | Super fine | 400 dpi x 400 dpi |
| | Fine | 200 dpi x 200 dpi |
| | Normal | 200 dpi x 100 dpi |
| Transmission mode (File type) | monochrome (TIFF-FX) | |
| Transmission coding methods | • TIFF-S (MH)<br>• TIFF-F (MR/MMR) | |
| Max. scanning size | • 420 mm x 297 mm (A3 size)<br>• Width: 297 mm<br>• Length: 1000 mm at the maximum | |
| Max. recording size | • 420 mm x 297 mm (A3 size)<br>• Length: 1000 mm at the maximum<br>• When receiving the data of an original that is longer than the paper sizes set in the paper trays, the data is printed according to the setting of [Print Separate Fax Pages]. | |
| Treatment of transmission error | Mail transmitted again. | None |
| | Internet fax Rx error report | When documents cannot be sent to the SMTP server, transmission error report to be printed/not printed can be set. |
| | | When MDN/DSN response is received, to be printed/not to be printed can be set. |
| | | When MDN/DSN response is received, transmission result is indicated on the transmission control report. |
| | | MDN/DSN response monitoring time can be set in the range from 0 to 99 hours. |
| Mail reception | Mail acquisition interval | Can be set to 1 to 60 minutes. |
| | Manual POP reception | Possible |
| | Reception by specifying a box | Not Available (except Memory RX) |
| | Received document size | width: A4 / B4 / A3 |
| | Reception coding system | TIFF-S (MH), TIFF-F (MR/MMR) |
| List/report | Print DSN message | Output can be produced |
| | Print MDN message | Output can be produced |
| | Print receipt mail text | Output can be produced |

| | | |
|---|---|---|
| | Network fax relay result report | Output can be produced |
| | Network fax activity report | • During automatic output: Shared with Fax Activity Report. Max. 100.<br>• During manual output: Shared with Fax Activity Report. Max. 700. |
| | Network fax Rx error report | Output can be produced |

### 13.3.2 IP Address Fax

| | | |
|---|---|---|
| Image memory capacity | 128 GB (128 GB of 250 GB of the hard disk is used as a memory.) | |
| Max. no. of stored pages | Approx. 10000 pages<br>(numbers of pages in the case of storing standard A4-size pages containing approximately 700 characters at “fine” resolution) | |
| Scanning line density | Ultra fine | 600 dpi x 600 dpi |
| | Super fine | 400 dpi x 400 dpi |
| | Fine | 200 dpi x 200 dpi<br>300 dpi x 300 dpi (Color: Compact PDF only) |
| | Normal (Monochrome only) | 200 dpi x 100 dpi |
| Transmission mode (File type) | • Color (PDF, Compact PDF, TIFF-C) / Monochrome (TIFF)<br>• Capable of transmitting TIFF-C (JPEG)<br>• Incapable of receiving TIFF-C (JPEG) (any receiving TIFF-C jobs are discarded) | |
| Coding method | MH/MR/MMR (applicable only to monochrome format) | |
| Max. scanning size | • 420 mm x 297 mm (A3 size)<br>• Width: 297 mm<br>• Length: 1000 mm at the maximum | |
| Max. recording size | • 420 mm x 297 mm (A3 size)<br>• 1000 mm in the maximum recording size<br>• Originals in excess of 1000 mm cannot be received.<br>• In the color mode, the reception of an original in excess of 432 mm in length is unavailable.<br>• When receiving the data of an original that is longer than the paper sizes set in the paper trays, the data is printed according to the setting of [Print Separate Fax Pages]. (Only available for monochrome reception) | |
| Treatment of transmission error | Retry | Retry when a transmission error occurs at SIP Direct SMTP transmission.<br>Error codes subject to retry: N10, N12, N15 to 17 only |
| | TX error report | • TX error report printing ON/OFF can be set.<br>• A TX error report is printed when a TX error occurs and the TX error is recorded in the activity. |
| Reception | Received document size | Max. document width to be received: A3 |
| | Reception coding system | • TIFF-S (MH)<br>• TIFF-F (MR/MMR)<br>• PDF<br>• Compact PDF<br>• TIFF-C |
| | Received file size | • Unlimited (depends on the space available for use in the HDD)<br>• The file is not received, if the space available for use in the HDD is 107 MB or less.<br>• If the space available for use in the HDD runs out during reception, the session is abnormally terminated and the received file is deleted. |
| Report | Print receipt mail text | Possible |
| | IP address fax activity report | • During automatic output: Shared with Fax Activity Report. Max. 100.<br>• During manual output: Shared with Fax Activity Report. Max. 700. |
| | IP address fax result report | In common use with fax reception result report |
| | IP Address Fax RX Error Report | Possible |

# 14. i-Option LK-102 v3/104 v3/105 v4/106/107/108/110 v2/111/114/115 v2

## 14.1 Available function for i-Option

- The functions available for i-Option are as follows.

**⚠CAUTION**

- **Using the web browser function available with this machine, the contents on the Internet can be accessed from the control panel. Users are responsible for the contents that they access, download, or upload as well as the contents of other communication. Users shall follow the rules of their company and laws of their country. Konica Minolta, Inc. and its group companies accept no responsibility for the users' use of the Internet.**

### 14.1.1 List of advanced functions

| Function | Overview |
|---|---|
| Web browser | You can access contents on the Internet or corporate networks through this machine connected to the network to enable page viewing or file printing. You can also access other MFP connected to the network to use a User Box in the MFP via Web Connection. |
| Voice guidance | This function also helps people who have difficulty viewing the screen to carry out operations more smoothly via voice guidance. It is available on the Enlarge Display screen, Guidance screen, or Accessibility Settings screen.<br>English and Japanese are available. |
| PDF processing | Allows you to use features such as encryption of a PDF file, addition of an electronic signature, addition of file properties, creation of a PDF/A-based PDF file, and PDF linearization when sending a PDF file. |
| Encryption PDF (Digital ID) | Allows you to encrypt the PDF using a user digital signature when sending a PDF file. |
| Searchable PDF | Allows you to paste transparent text data into a PDF file when converting scanned original data into PDF files, and create a searchable PDF file. This function automatically creates text information from scanned images using OCR character recognition technology. |
| Searchable PDF (Fax RX Document) | Allows you to create a text searchable PDF file when converting a received fax into a PDF file using the Forward TX function or TSI Routing function and sending it to PC. |
| OOXML File Conversion | Allows you to send or store the scanned original data by converting it into an OOXML (DOCX or XLSX) file. Also allows you to paste transparent text data and create a text searchable OOXML file. This function automatically creates text information from scanned images using OCR character recognition technology. |
| Compact PDF (Print RX Document) | Allows you to select a file type as Compact PDF when fetching the data stored in the box of this machine using the printer driver and sending it by E-mail or sending it to PC. |
| High image quality compact PDF | This function improves the image processing accuracy when creating a Compact PDF data.<br>This function improves the reproducibility of the colored characters or lines. Also, it allows you to set the reversed characters as the texts to be searched. |
| Barcode font | Allows you to generate a bar code based on data sent to this machine from the ERP (Enterprise Resource Planning) system, and print it from this machine. You can directly print data without using the printer driver. |
| Unicode font | Allows you to print text information (unicode) of multiple languages sent to this machine from the ERP (Enterprise Resource Planning) system. You can directly print data without using the printer driver. |
| OCR font | OCR font can be used on this machine. * |
| E-mail RX Print | Allows you to print the file attached to an E-mail from this machine when the E-mail has been sent to the address of this machine. |
| ThinPrint function | Allows you to enable the ThinPrint function on this machine.<br>ThinPrint is such a function allows you to make a speedy print by compressing the data or controlling the marginal zone when sending a print job from ThinPrint Engine (.print Engine) to ThinPrint Client (.print Client). This machine operates as ThinPrint Client (.print Client). |
| Ubiquitous Printing | Ubiquitous printing is a function that executes print jobs, which are spooled in an MFP through the user's computer once, from any MFP in a ubiquitous group that consists of multiple MFPs. |
| TPM (Trusted Platform Module) *2 | TPM (Trusted Platform Module) is a hardware chip used for processing such as information encryption and decryption. Security enhancement is realized by encrypting confidential information such as certificates and passwords of this machine.<br>The TPM key used for encrypting confidential information on the machine is saved in a dedicated storage space mounted on the TPM chip. No external devices can access the storage space and the confidential information can be kept in utmost security.<br>In addition, for future possible replacement of the TPM chip, information required for restoring the TPM key can be saved for backup in a USB memory device. |
| My Panel | Allows you to use the touch panel, which is customized only for you, through any MFP connected to the network. The touch panel customization settings are stored on the My Panel Manager server. If necessary, they can be changed on My Panel Manager. |
| My Address | Allows you to use a dedicated address book through any MFP connected to the network. The dedicated address book is stored on the My Panel Manager server. If necessary, it can be edited on My Panel Manager. |

- *: OCR font is standardized font that enables text to be appropriately recognized when the OCR (Optical Character Recognition) is used.

### 14.1.2 Types of advanced functions

**NOTE**

- **To use the i-Option functions, the upgrade kit UK-211 must be installed. (Except LK-111 and LK-115 v2)**

#### (1) Table 1

| Function | Kit name | | | |
|---|---|---|---|---|
| | Upgrade kit | i-Option | | |
| | UK-211 | LK-102 v3 | LK-104 v3 | LK-105 v4 |
| Web browser | - | - | - | - |
| PDF processing | ○ | ○ | - | - |
| Voice guidance *1 | ○ | - | ○ | - |
| Searchable PDF | ○ | - | - | ○ |

- *1: To use voice guidance, in addition to the LK-104 license activation, the optional local interface kit EK-608 or EK-609 must be installed.

#### (2) Table 2

| Function | Kit name | | | |
|---|---|---|---|---|
| | Upgrade kit | i-Option | | |
| | UK-211 | LK-106 | LK-107 | LK-108 |
| Barcode font | ○ | ○ | - | - |
| Unicode font | ○ | - | ○ | - |
| OCR font | ○ | - | - | ○ |

#### (3) Table 3

| Function | Kit name | | | | |
|---|---|---|---|---|---|
| | Upgrade kit | i-Option | | | |
| | UK-211 | LK-110 v2 | LK-111 | LK-114 | LK-115 v2 |
| Searchable PDF (Fax RX Document) | ○ | ○ | - | - | - |
| Compact PDF (Print RX Document) | ○ | ○ | - | - | - |
| High image quality compact PDF | ○ | ○ | - | - | - |
| Encryption PDF (Digital ID) | ○ | ○ | - | - | - |
| OOXML File Conversion | ○ | ○ | - | - | - |
| E-mail RX Print | ○ | ○ | - | - | - |
| ThinPrint function | - | - | ○ | - | - |
| Ubiquitous Printing | ○ | - | - | ○ | - |
| TPM (Trusted Platform Module) | - | - | - | - | ○ |

#### (4) Table 4

| Function | Kit name | | |
|---|---|---|---|
| | Upgrade kit | My Panel Manager | |
| | UK-211 | Application license | Device license |
| My Panel | ○ | ○ | ○ |
| My Address | ○ | ○ | ○ |

### 14.1.3 Activation procedures of i-Option

For details of the activation procedures, refer to the followings.

- Activation via Administrator Settings: I.2.4.2 License Settings
- Activation via Service Mode: I.8.3.10 License management - Activation

## 14.2 Web browser function

- Main specifications of the web browser installed are as follows.

| | |
|---|---|
| Browser engine | Webkit |
| Supported protocol | • HTTP (HTTP 0.9/1.0/1.1)<br>• HTTPS<br>• TCP/IP |
| Supported markup language | • HTML 4.01<br>• A part of HTML 5.0<br>• XHTML 1.1/Basic |
| Style sheet | • CSS1<br>• CSS2 |

| | |
|---|---|
| | • CSS3 |
| Script language | • JavaSrcript 1.7<br>• ECMAScript 3rd Edition<br>• Ajax*1 |
| DOM | • Level 1<br>• Level 2 |
| File type | • JPEG<br>• BMP<br>• PNG<br>• GIF<br>• Animation GIF<br>• PDF<br>• Flash 10 and earlier |
| Supported SSL/TLS version | • SSL3.0<br>• TLS1.0 |
| Supported character code | • Japanese (Shift_JIS)<br>• Japanese (ISO-2022-JP)<br>• Japanese (EUC-JP)<br>• Chinese Simplified (GB2312)<br>• Chinese Traditional (Big5)<br>• Western European (ISO-8859-1)<br>• Unicode (UTF-8) |
| PDF viewer | Adobe® Reader® LE |
| Flash player | Adobe® Flash® Player 8 |

- *1: Limited to the JavaScript-supported range only.

**NOTE**

**The Flash player installed on the MFP does not support the following:**

- **The function to trigger an event caused by a key operation.**
- **The function to paste or acquire data such as character strings from the clipboard.**
- **The context menu.**
- **The Flash printing function.**
- **The function to execute JavaScript from Flash or to operate Flash by JavaScript.**
- **A screen that has no window (pop-up).**
- **The Flash bookmark function.**
- **The function to send/receive data in real time using the Flash Media Server.**
- **The function to communicate via the XMLSocket.**

**NOTE**

- **When using a web browser function, 26 dots from the perimeter of the touch panel area is not sensitive area.**
  **It is possible to narrow the non-sensitive area by using [Software Switch Setting] in Service Mode as with followings. However, the touch panel cannot detect touch operation correctly.**
  - **Switch No.143 [00000000] at Bit assignment/[00] at HEX assignment non-sensitive area: 26 dots from the perimeter of the touch panel**
  - **Switch No.143 [00000001] at Bit assignment/[01] at HEX assignment non-sensitive area: 16 dots from the perimeter of the touch panel**
  - **Switch No.143 [00000010] at Bit assignment/[02] at HEX assignment non-sensitive area: 9 dots from the perimeter of the touch panel**

# D OVERALL COMPOSITION

## 1. SYSTEM CONFIGURATION

### 1.1 System configuration

#### 1.1.1 System front view 1

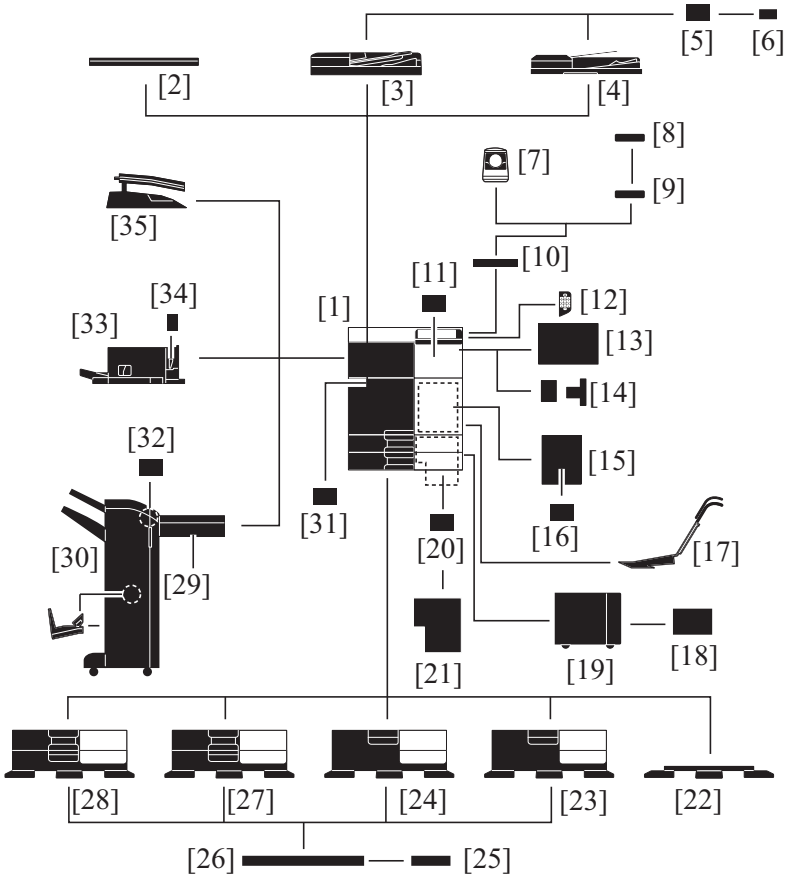


| | | | |
|---|---|---|---|
| [1] | bizhub C368/C308/C258 | [2] | Original Cover OC-511 |
| [3] | Reverse Automatic Document Feeder DF-629 | [4] | Dual Scan Document Feeder DF-704 |
| [5] | Stamp Unit SP-501 | [6] | Spare TX Marker Stamp 2 |
| [7] | Authentication Unit AU-102 | [8] | Authentication Unit AU-201S |
| [9] | Mount Kit MK-735 | [10] | Working Table WT-506 |
| [11] | Security Kit SC-508 | [12] | Keypad KP-101 |
| [13] | Clean Unit CU-101 | [14] | Mount Kit MK-745 |
| [15] | Fax Mount Kit MK-742 *1 | [16] | Fax Kit FK-515 *1 |
| [17] | Mount Kit MK-730 | [18] | Transformer kit TK-101 |
| [19] | Large Capacity Unit LU-302 | [20] | Video Interface Kit VI-508 |
| [21] | Image Controller IC-416 | [22] | Desk DK-705 *2 |
| [23] | Desk DK-510 *2*4 | [24] | Paper Feed Cabinet PC-410 |
| [25] | Power Supply BOX MK-734 *3 | [26] | Heater HT-509 |
| [27] | Paper Feed Cabinet PC-210 | [28] | Paper Feed Cabinet PC-110 |
| [29] | Relay Unit RU-513 | [30] | Finisher FS-534/FS-534SD |
| [31] | Fax Kit FK-514 | [32] | Punch Kit PK-520 |
| [33] | Finisher FS-533 | [34] | Punch Kit PK-519 |
| [35] | Job Separator JS-506 | - | - |

- *1: Japan and North America only
- *2: Except for Europe area
- *3: Except for Japan
- *4: Large Capacity Unit LU-302 cannot be mounted when Desk DK-705 is installed.

**NOTE**

- **Use the desk or the paper feed cabinet without fail when installing on the floor in order to keep the function and quality of the unit.**

### 1.1.2 System front view 2

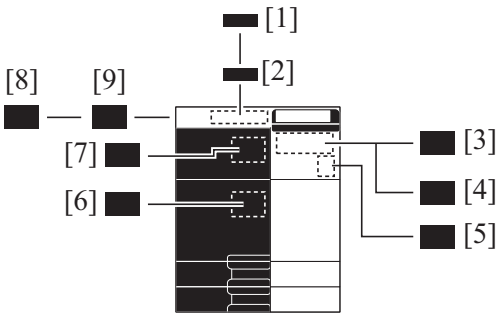


| | | | |
|---|---|---|---|
| [1] | Condensation prevention heater power supply box MK-719 *1 | [2] | Condensation prevention heater HT-510 *1 |
| [3] | Local Interface Kit EK-608 | [4] | Local Interface Kit EK-609 |
| [5] | Upgrade Kit UK-212 | [6] | Keyboard Holder KH-102 *2 |
| [7] | Hard Disk HD-524 | [8] | i-Option LK-102 v3/104 v3/105 v4/106/107/108/110 v2/111/114/115 *3 |
| [9] | Upgrade Kit UK-211 | - | - |

- *1: Japan only
- *2: Except for Japan
- *3: LK-115 v2 is to be soon mounted.

## 1.2 Optional configuration

### 1.2.1 Combination configuration of main body and document options

| | | | | |
|---|---|---|---|---|
| 1 | Main body | OC-511 | | |
| 2 | Main body | DF-629 | SP-501 | Spare TX Marker Stamp |
| 3 | Main body | DF-704 | SP-501 | Spare TX Marker Stamp |

### 1.2.2 Combination configuration of main body and paper feed options

| | | | |
|---|---|---|---|
| 1 | Main body | DK-705 | |
| 2 | Main body | DK-510 | |
| 3 | Main body | PC-110 | LU-302 |
| 4 | Main body | PC-210 | LU-302 |
| 5 | Main body | PC-410 | LU-302 |

### 1.2.3 Combination configuration of main body and post-processing options

| | | | | | |
|---|---|---|---|---|---|
| 1 | Main body | JS-506 | | | |
| 2 | Main body | FS-533 | PK-519 | | |
| 3 | Main body | RU-513 | FS-534 | PK-520 | SK-602 |
| 4 | Main body | RU-513 | FS-534SD | PK-520 | SK-602 |

### 1.2.4 Combination of main body and fax kit

#### (1) Japan, North America

| | | | | | | |
|---|---|---|---|---|---|---|
| 1 | Main body | FK-514 (main line) | FK-514 (line 2) | MK-742 | FK-515 (line 3) | FK-515 (line 4) |

#### (2) Europe

| | | | |
|---|---|---|---|
| 1 | Main body | FK-514 (main line) | FK-514 (line 2) |

### 1.2.5 Combination of main body (scanner section) and heater

#### (1) Japan

| | | | |
|---|---|---|---|
| 1 | Main body (scanner section) | MK-719 | HT-510 |

#### (2) International

- No optional settings

### 1.2.6 Combination configuration of paper feed options and dehumidifier heater

#### (1) Japan

| | | |
|---|---|---|
| 1 | DK-510 (standard equipment dehumidifier heater) | HT-509 |

| | | | | |
|---|---|---|---|---|
| 2 | PC-110 (standard equipment dehumidifier heater) | HT-509 | LU-302 (standard equipment dehumidifier heater) | TK-101 |
| 3 | PC-210 (standard equipment dehumidifier heater) | HT-509 | LU-302 (standard equipment dehumidifier heater) | TK-101 |
| 4 | PC-410 (standard equipment dehumidifier heater) | HT-509 | LU-302 (standard equipment dehumidifier heater) | TK-101 |

### (2) International

| | | | | | |
|---|---|---|---|---|---|
| 1 | DK-510 | HT-509 | MK-734 | | |
| 2 | PC-110 | HT-509 | MK-734 | LU-302 (standard equipment dehumidifier heater) | TK-101 |
| 3 | PC-210 | HT-509 | MK-734 | LU-302 (standard equipment dehumidifier heater) | TK-101 |
| 4 | PC-410 | HT-509 | MK-734 | LU-302 (standard equipment dehumidifier heater) | TK-101 |

# 2. SECTION CONFIGURATION

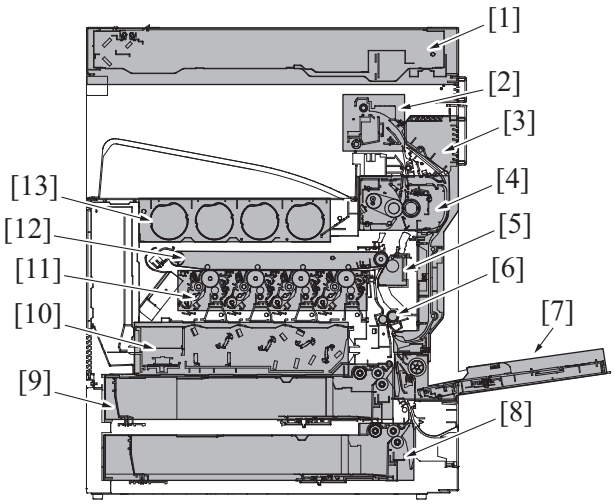


| | | | |
|---|---|---|---|
| [1] | Scanner section | [2] | Paper exit/reverse section |
| [3] | Duplex section | [4] | Fusing section |
| [5] | 2nd transfer section | [6] | Registration section |
| [7] | Paper feed section (Manual bypass tray) | [8] | Paper feed section (Tray 2) |
| [9] | Paper feed section (Tray 1) | [10] | Write section (PH section) |
| [11] | Developing section | [12] | Transfer section |
| [13] | Toner supply section | - | - |

# 3. PAPER PATH

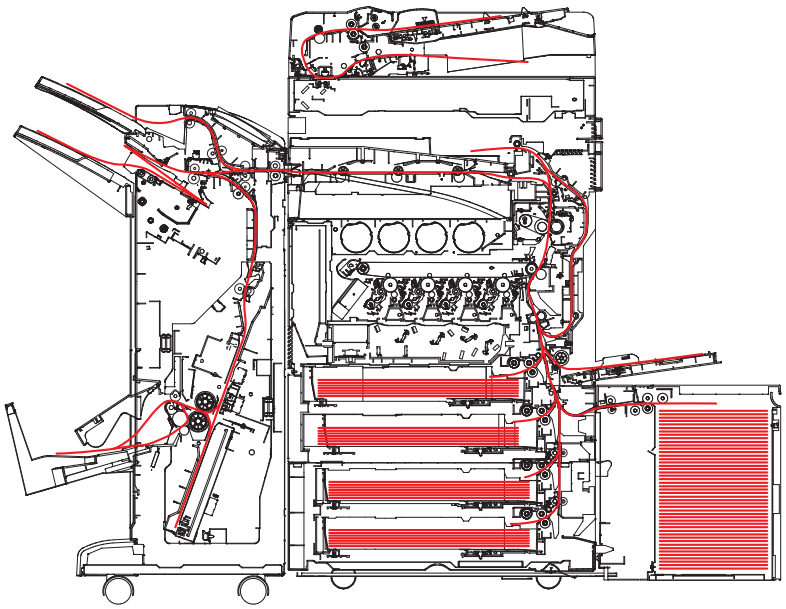

# 4. CONTROL BLOCK DIAGRAM

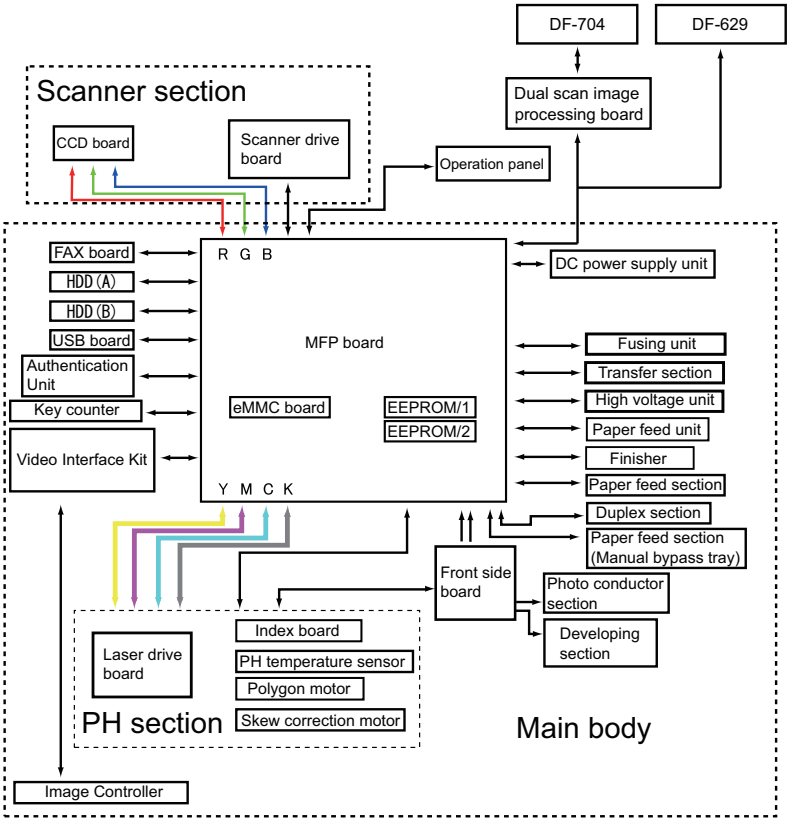

# 5. IMAGE CREATION PROCESS

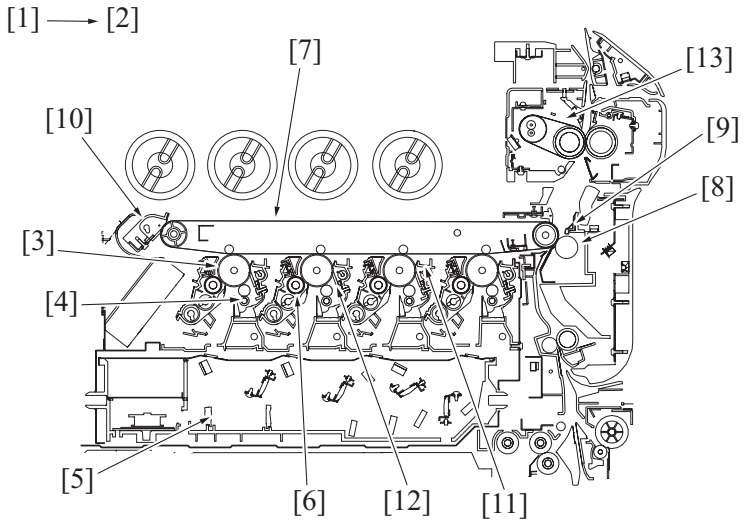


| | | |
|---|---|---|
| [1] | Photoelectric conversion | The light reflected off the surface of the original is separated into different colors using the color filters (R, G, and B); CCD then converts it into a corresponding electric signal and outputs the signal to the IR imaging processing section. |
| [2] | Printer image processing | • The electric signal is converted to digital image signals. After going through some corrections, video signals (C, M, Y, and K) are output to the printer image processing section.<br>• D/A conversion will be performed after the VIDEO signals (Y, M, C, K) are corrected. This data will control the emission of the laser diode. |
| [3] | Photo conductor | The image of the original projected onto the surface of the photo conductor is changed to a corresponding electrostatic latent image. |
| [4] | Photo conductor charging Roller | Supply AC/DC charge on the photo conductor. |
| [5] | Laser exposure | Expose photo conductor to a laser beam to develop electrostatic latent image. |
| [6] | Developing | • The toner, agitated and negatively charged in the developer mixing chamber, is attracted onto the electrostatic latent image formed on the surface of the photo conductor. It is thereby changed to a visible, developed image.<br>• AC and DC negative bias voltages are applied to the developing roller, thereby preventing toner from sticking to the background image portion. |
| [7] | 1st image transfer | A DC positive voltage is applied to the backside of the transfer belt, thereby allowing the visible, developed image on the surface of each of the photo conductors (Y, M, C, and K) to be transferred onto the transfer belt. |
| [8] | 2nd image transfer | A DC positive voltage is applied to the backside of the paper, thereby allowing the visible, developed image on the surface of the transfer belt to be transferred onto the paper. |
| [9] | Paper separation | The paper, which has undergone the 2nd image transfer process, is neutralized so that it can be properly separated from the transfer belt by the paper separator claws. |
| [10] | Transfer belt cleaning | Residual toner on the surface of the transfer belt is collected for cleaning by cleaning blade. |
| [11] | Main erase | The surface of the photo conductor is irradiated with light, which neutralizes any surface potential remaining on the surface of the photo conductor. |
| [12] | Photo conductor cleaning | The residual toner left on the surface of the photo conductor is scraped off. |
| [13] | Fusing | The visible toner image transferred onto the surface of the paper is melted by the heat of the fusing roller and fixed to the paper by pressure. |

# 6. IMAGE FORMING CONTROL

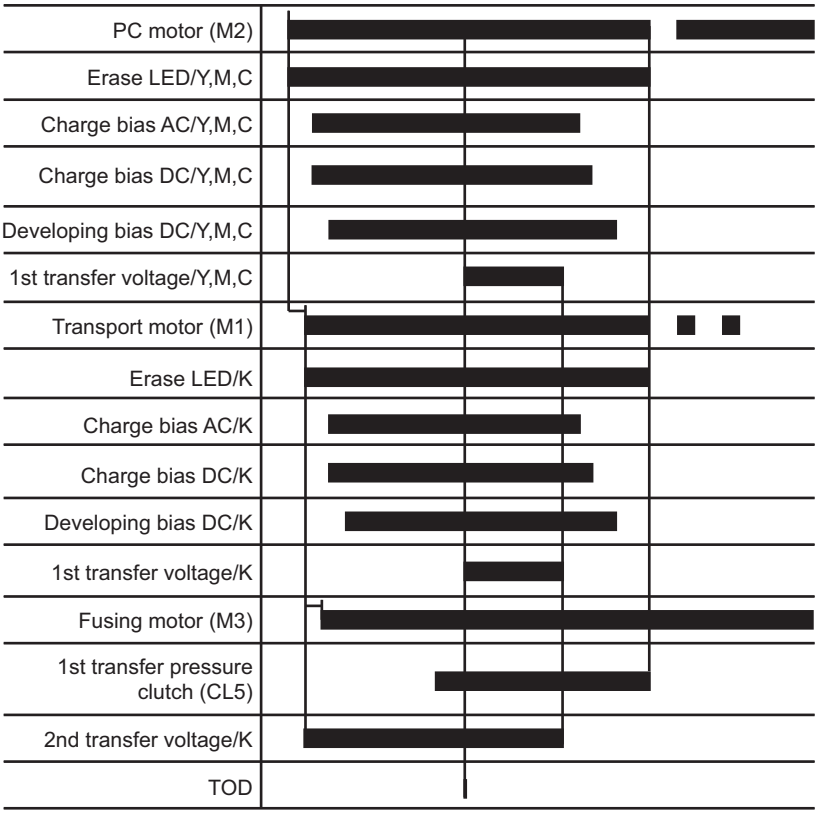

# 7 PROCESS SPEED

| Paper Type/Mode | bizhub C368 | bizhub C308 /C258 |
|---|---|---|
| • Plain paper<br>• Thin Paper | 166.4 mm/s | 145.8 mm/s |
| • Thick 1<br>• Thick 1+ | 83.2 mm/s | |
| • Thick 2<br>• Thick 3<br>• Thick 4<br>• Envelop<br>• Postcard | 83.2 mm/s | |
| • OHP film * | 166.4 mm/s | 145.8 mm/s |
| • Gloss mode | 83.2 mm/s | |
| • 1200 dpi mode | 83.2 mm/s | |

• *: Only the black mode is available to the OHP film.

# E SERVICE TOOL

## 1. bizhub C368/C308/C258

### 1.1 Service material list

| Name | Shape | Material No. | Remarks |
|---|---|---|---|
| Cleaning pad | 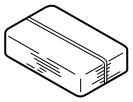 | 000V-18-1 | 10pcs/1pack |
| Hydro-wipe |  | 65AA-9920 | 10pcs/1 pack |

### 1.2 CE tool list

| Tool name | Shape | Quantity | Parts No. | Remarks |
|---|---|---|---|---|
| Color chart |  | 1 | 9J06 PJP1 ## | |

### 1.3 Utility tool

#### 1.3.1 IC card information setting tool of AU-201/AU-201S/AU-202H/OMNIKEY 5427CK (AU-205H)/SCL-010/YSoft card reader

**(1) Outline**

- Before connecting the AU-201/AU-201S/AU-202H/OMNIKEY 5427CK (AU-205H)/SCL-010 card reader to the MFP, it is necessary to prepare an IC card information setting file with the loadable driver. To prepare this file, a tool is used for preparing the IC card information setting file for use in each card reader.

**(2) IC card information setting file preparation tool**

**(a) Tool names**

Tools for CE

- For AU-201/AU-201S: Auth Device Tool Advanced for AU-201/AU-201S
- For SCL-010: Auth Device Tool Advanced for SCL-010
- For AU-202H: Auth Device Tool Advanced for AU-202H
- For OMNIKEY 5427CK (AU-205H): Auth Device Advanced for 5427CK (AU-205H)
- For the YSoft card reader: Auth Device Tool Advanced for YSoft CRv2

**(b) System requirement of tools for CE**

| | |
|---|---|
| OS | • Windows Vista<br>• Windows 7<br>• Windows 8<br>Support both 32-bit (x86) and 64-bit (x64) editions. |
| Library<br>(Any of these needs to be installed) | • Microsoft .Net Framework2.0 SP2<br>• Microsoft .Net Framework3.0 SP2<br>• Microsoft .Net Framework3.5 SP1<br>• Microsoft .Net Framework3.5.1 |
| Hard disk | 3 MB or more free space is required |
| Display | 800 x 600 pixels,16 bit full color |

**(3) IC card information setting procedures**

**(a) Preparations for the following (c), (e), (g), (j), (k) or (m) procedures**

- Using the PageScope Data Administrator, register the target MFP in advance.
- Set the MFP into a state in which it can communicate over the network.
- Accessing PageScope Web Connection -> [Administrator mode] -> [Security Settings], issue a self-signed certificate from [Device Certificate Setting] and install it.
- Accessing PageScope Web Connection -> [Administrator mode] -> [Network Settings], set use of [SSL/TLS] in [OpenAPI] to “SSL Only”.

**NOTE**

- **Only one loadable device driver must be stored in the USB memory, and please do not save any other data in the USB memory.**

### (b) Auth Device Tool Advanced for AU-201/AU-201S (Setting IC card information in the loadable driver in advance)

1. Obtain the loadable driver (ICC_LDR.tar) for use in AU-201/AU-201S that is compatible with the type of card used.
2. Start the Auth Device Tool Advanced for AU-201/AU-201S.
3. Select [Import Loadable Driver] from [File] and select the loadable driver.
4. Select card type.
5. If the card is good for detailed settings, click [Detail Setting/Extra Data Setting].
6. Input the necessary extended data. (For details, ask the IC card administrator.)
7. Select Loadable Driver in [Export Format] and click [Export].
8. Select the loadable driver to be updated and the output location of the loadable driver and click [OK].
9. Copy the output loadable driver (ICC_LDR.tar) to the root directory of the USB memory.
   **NOTE**
   - **Please do not save any other data in the USB memory.**

10. Call the Service Mode to the screen of the MFP.
11. Select [System 2] -> [Driver Install] -> [Install].
12. Connect the USB memory in which the loadable driver has been saved to the USB port on the side of the control panel.
13. Select [Loadable driver] and touch the [Start] to install the loadable driver.
14. Remove the USB memory and, accessing [Billing Settings] -> [Management Function Choice] -> [Authentication Device 2], select [Card].
15. Turn OFF the main power switch and turn it ON again more than 10 seconds after.
16. Set the authentication user.

### (c) Auth Device Tool Advanced for AU-201/AU-201S (Installing IC card information setting only in the MFP afterward)

1. Install the loadable driver for use in AU-201/AU-201S that is compatible with the type of card used.
2. Start the Auth Device Tool Advanced for AU-201/AU-201S.
3. Select card type.
4. If the card is good for detailed settings, click [Detail Setting/Extra Data Setting].
5. Input the necessary extended data. (For details, ask the IC card administrator.)
6. Select IC card information setting file in [Export Format] and click [Export].
7. Set the encrypted password.
8. Save the file (iccConfig.bin).
9. Start the PageScope Data Administrator, and select the target MFP.
10. In the [Settings for multiple device] tab, click [Batch setting of IC Card Information].
11. Using [Browse], select the file saved in step 8.
12. Click [Open] and type the encrypted password set in step 7.
13. Click [Next] and select the device to be imported.
14. Click [Start] and write the file in the MFP.
15. Check that “Normal” is shown in [Status].
16. Turn OFF the main power switch and turn it ON again more than 10 seconds after.
17. Set the authentication user.

### (d) Auth Device Tool Advanced for SCL-010 (Setting IC card information in the loadable driver in advance)

1. Obtain the loadable driver (ICC_LDR.tar) for use in SCL-010 that is compatible with the type of card used.
2. Start the Auth Device Tool Advanced for SCL-010.
3. Select card type.
4. Select Loadable Driver in [Export Format] and click [Export].
5. Select the loadable driver to be updated and the output location of the loadable driver and click [OK].
6. Copy the output loadable driver (ICC_LDR.tar) to the root directory of the USB memory.
   **NOTE**
   - **Please do not save any other data in the USB memory.**

7. Call the Service Mode to the screen of the MFP.
8. Select [System 2] -> [Driver Install] -> [Install].
9. Connect the USB memory in which the loadable driver has been saved to the USB port on the side of the control panel.
10. Select [Loadable driver] and touch the [Start] to install the loadable driver.
11. Remove the USB memory and, accessing [Billing Settings] -> [Management Function Choice] -> [Authentication Device 2], select [Card].
12. Turn OFF the main power switch and turn it ON again more than 10 seconds after.
13. Set the authentication user.

### (e) Auth Device Tool Advanced for SCL-010 (Installing IC card information setting only in the MFP afterward)

1. Install the loadable driver for SCL-010 to the MFP.
2. Start the Auth Device Tool Advanced for SCL-010.
3. Select card type.
4. Select IC card information setting file in [Export Format] and click [Export].
5. Set the encrypted password.
6. Save the file (iccConfig.bin).
7. Start the PageScope Data Administrator, and select the target MFP.
8. In the [Settings for multiple device] tab, click [Batch setting of IC Card Information].
9. Using [Browse], select the file saved in step 6.
10. Click [Open] and type the encrypted password set in step 5.
11. Click [Next] and select the device to be imported.
12. Click [Start] and write the file in the MFP.
13. Check that “Normal” is shown in [Status].

14. Turn OFF the main power switch and turn it ON again more than 10 seconds after.
15. Set the authentication user.

### (f) Auth Device Tool Advanced for AU-202H (Setting IC card information in the loadable driver in advance)

1. Obtain the loadable driver (ICC_LDR.tar) for use in AU-202H that is compatible with the type of card used.
2. Start the Auth Device Tool Advanced for AU-202H.
3. Set the card ID length.
4. Select Loadable Driver in [Export Format] and click [Export].
5. Select the loadable driver to be updated and the output location of the loadable driver and click [OK].
6. Copy the output loadable driver (ICC_LDR.tar) to the root directory of the USB memory.
   **NOTE**
   - **Please do not save any other data in the USB memory.**
7. Call the Service Mode to the screen of the MFP.
8. Select [System 2] -> [Driver Install] -> [Install].
9. Connect the USB memory in which the loadable driver has been saved to the USB port on the side of the control panel.
10. Select [Loadable driver] and touch the [Start] to install the loadable driver.
11. Remove the USB memory and, accessing [Billing Settings] -> [Management Function Choice] -> [Authentication Device 2], select [Card].
12. Turn OFF the main power switch and turn it ON again more than 10 seconds after.
13. Set the authentication user.

### (g) Auth Device Tool Advanced for AU-202H (Installing IC card information setting only in the MFP afterward)

1. Install the loadable driver for AU-202H to the MFP.
2. Start the Auth Device Tool Advanced for AU-202H.
3. Set the card ID length.
4. Select IC card information setting file in [Export Format] and click [Export].
5. Set the encrypted password.
6. Save the file (iccConfig.bin).
7. Start the PageScope Data Administrator, and select the target MFP.
8. In the [Settings for multiple device] tab, click [Batch setting of IC Card Information].
9. Using [Browse], select the file saved in step 6.
10. Click [Open] and type the encrypted password set in step 5.
11. Click [Next] and select the device to be imported.
12. Click [Start] and write the file in the MFP.
13. Check that “Normal” is shown in [Status].
14. Turn OFF the main power switch and turn it ON again more than 10 seconds after.
15. Set the authentication user.

### (h) Auth Device Tool Advanced for 5427CK (Setting IC card information in the loadable driver in advance: TypeA/ HID Prox/Multiple)

**NOTE**
- **Selecting [Multiple] makes cards of HID Prox, HID iCLASS and TypeA available at the same time.**

1. Obtain the loadable driver (ICC_LDR.tar) for use in OMNIKEY 5427CK (AU-205H) that is compatible with the type of card used.
2. Start the Auth Device Tool Advanced for 5427CK (AU-205H).
3. Select card type. (Except for HID iCLASS)
4. Select Loadable Driver in [Export Format] and click [Export].
5. Select the loadable driver to be updated and the output location of the loadable driver and click [OK].
6. Copy the output loadable driver (ICC_LDR.tar) to the root directory of the USB memory.
   **NOTE**
   - **Please do not save any other data in the USB memory.**
7. Call the Service Mode to the screen of the MFP.
8. Select [System 2] -> [Driver Install] -> [Install].
9. Connect the USB memory in which the loadable driver has been saved to the USB port on the side of the control panel.
10. Select [Loadable driver] and touch the [Start] to install the loadable driver.
11. Remove the USB memory and, accessing [Billing Settings] -> [Management Function Choice] -> [Authentication Device 2], select [Card].
12. Turn OFF the main power switch and turn it ON again more than 10 seconds after.
13. Set the authentication user.

### (i) Auth Device Tool Advanced for 5427CK (Setting IC card information in the loadable driver in advance: HID iCLASS).

1. Obtain the loadable driver (ICC_LDR.tar) for use in OMNIKEY 5427CK (AU-205H) that is compatible with the type of card used.
2. Start the Auth Device Tool Advanced for 5427CK (AU-205H).
3. Select HID iCLASS.
4. Click [Detail Setting].
5. Set the card ID length.
6. Select Loadable Driver in [Export Format] and click [Export].
7. Select the loadable driver to be updated and the output location of the loadable driver and click [OK].
8. Copy the output loadable driver (ICC_LDR.tar) to the root directory of the USB memory.
   **NOTE**
   - **Please do not save any other data in the USB memory.**
9. Call the Service Mode to the screen of the MFP.

10. Select [System 2] -> [Driver Install] -> [Install].
11. Connect the USB memory in which the loadable driver has been saved to the USB port on the side of the control panel.
12. Select [Loadable driver] and touch the [Start] to install the loadable driver.
13. Remove the USB memory and, accessing [Billing Settings] -> [Management Function Choice] -> [Authentication Device 2], select [Card].
14. Turn OFF the main power switch and turn it ON again more than 10 seconds after.
15. Set the authentication user.

### (j) Auth Device Tool Advanced for 5427CK (Installing IC card information setting only in the MFP afterward: TypeA/HID Prox/Multiple)

1. Install the [loadable driver] for the OMNIKEY 5427CK (AU-205H) on the MFP.
2. Start the Auth Device Tool Advanced for 5427CK (AU-205H).
3. Select card type. (Except for HID iCLASS)
4. Select IC card information setting file in [Export Format] and click [Export].
5. Set the encrypted password.
6. Save the file (iccConfig.bin).
7. Start the PageScope Data Administrator, and select the target MFP.
8. In the [Settings for multiple device] tab, click [Batch setting of IC Card Information].
9. Using [Browse], select the file saved in step 6.
10. Click [Open] and type the encrypted password set in step 5.
11. Click [Next] and select the device to be imported.
12. Click [Start] and write the file in the MFP.
13. Check that “Normal” is shown in [Status].
14. Turn OFF the main power switch and turn it ON again more than 10 seconds after.
15. Set the authentication user.

### (k) Auth Device Tool Advanced for 5427CK (Installing IC card information setting only in the MFP afterward: HID iCLASS)

1. Install the [loadable driver] for the OMNIKEY 5427CK (AU-205H) on the MFP.
2. Start the Auth Device Tool Advanced for 5427CK (AU-205H).
3. Select HID iCLASS.
4. Click [Detail Setting].
5. Set the card ID length.
6. Select IC card information setting file in [Export Format] and click [Export].
7. Set the encrypted password.
8. Save the file (iccConfig.bin).
9. Start the PageScope Data Administrator, and select the target MFP.
10. In the [Settings for multiple device] tab, click [Batch setting of IC Card Information].
11. Using [Browse], select the file saved in step 8.
12. Click [Open] and type the encrypted password set in step 7.
13. Click [Next] and select the device to be imported.
14. Click [Start] and write the file in the MFP.
15. Check that “Normal” is shown in [Status].
16. Turn OFF the main power switch and turn it ON again more than 10 seconds after.
17. Set the authentication user.

### (l) Auth Device Tool Advanced for YSoft CRv2 (Setting IC card information in the loadable driver in advance)

**NOTE**

- **If a YSoft card reader is used, when performing authentication, the default setting for the loadable driver makes the card to be informed as an HID Prox card regardless of which type you are using. To change the card type when performing authentication, using Auth Device Tool Advanced for YSoft CRv2 to choose a corresponding card type to be reported to the authentication program from the following list.**

| Card Reader Name | Readable Card Type | IC Card Information Setting (card type to be reported) |
|---|---|---|
| KM USB Reader v2 MultiReader HF | Mifare | TypeA (1) *1 |
| KM USB Reader v2 Legic Advant | LEGIC | TypeA (1) *1 |
| KM USB Reader v2 ASK FSK 125kHz | EM4100, EM4102, RFID 125kHz | EM4100/<br>EM4102/<br>RFID 125kHz |
| KM USB Reader v2 Mot/Ind W26 | Indala | Indala |
| KM USB Reader v2 HID Prox | HID Prox | HID Prox (1) *2 |
| KM USB Reader v2 HID iCLASS | HID iCLASS | HID iCLASS (1) *3 |

- ***1 The content (ID) to be read from the type A card setting differs from which to be read by using AU-201/AU-201S.**
- ***2 The content (ID) to be read from the HID Prox card setting differs from which to be read by using AU-201H.**
- ***3 The content (ID) to be read from the HID iCLASS card setting differs from which to be read by using AU-202H.**

1. Obtain the loadable driver (ICC_LDR.tar) for the YSoft card reader.
2. Start the Auth Device Tool Advanced for YSoft CRv2.
3. Select card type.
4. Select Loadable Driver in [Export Format] and click [Export].
5. Select the loadable driver to be updated and the output location of the loadable driver and click [OK].
6. Copy the output loadable driver (ICC_LDR.tar) to the root directory of the USB memory.
   **NOTE**
   - **Please do not save any other data in the USB memory.**

7. Call the Service Mode to the screen of the MFP.
8. Select [System 2] -> [Driver Install] -> [Install].
9. Connect the USB memory in which the loadable driver has been saved to the USB port on the side of the control panel.
10. Select [Loadable driver] and touch the [Start] to install the loadable driver.
11. Remove the USB memory and, accessing [Billing Settings] -> [Management Function Choice] -> [Authentication Device 2], select [Card].
12. Turn OFF the main power switch and turn it ON again more than 10 seconds after.
13. Set the authentication user.

### (m) Auth Device Tool Advanced for YSoft CRv2 (Installing IC card information setting only in the MFP afterward)

**NOTE**

- **If a YSoft card reader is used, when performing authentication, the default setting for the loadable driver makes the card to be informed as an HID Prox card regardless of which type you are using. To change the card type when performing authentication, using Auth Device Tool Advanced for YSoft CRv2 to choose a corresponding card type to be reported to the authentication program from the following list.**

| Card Reader Name | Readable Card Type | IC Card Information Setting (card type to be reported) |
|---|---|---|
| KM USB Reader v2 MultiReader HF | Mifare | TypeA (1) *1 |
| KM USB Reader v2 Legic Advant | LEGIC | TypeA (1) *1 |
| KM USB Reader v2 ASK FSK 125kHz | EM4100, EM4102, RFID 125kHz | EM4100/<br>EM4102/<br>RFID 125kHz |
| KM USB Reader v2 Mot/Ind W26 | Indala | Indala |
| KM USB Reader v2 HID Prox | HID Prox | HID Prox (1) *2 |
| KM USB Reader v2 HID iCLASS | HID iCLASS | HID iCLASS (1) *3 |

- ***1 The content (ID) to be read from the type A card setting differs from which to be read by using AU-201/AU-201S.**
- ***2 The content (ID) to be read from the HID Prox card setting differs from which to be read by using AU-201H.**
- ***3 The content (ID) to be read from the HID iCLASS card setting differs from which to be read by using AU-202H.**

1. Install the loadable driver for the YSoft card reader to the MFP.
2. Start the Auth Device Tool Advanced for YSoft CRv2.
3. Select card type.
4. Select IC card information setting file in [Export Format] and click [Export].
5. Set the encrypted password.
6. Save the file (iccConfig.bin).
7. Start the PageScope Data Administrator, and select the target MFP.
8. In the [Settings for multiple device] tab, click [Batch setting of IC Card Information].
9. Using [Browse], select the file saved in step 6.
10. Click [Open] and type the encrypted password set in step 5.
11. Click [Next] and select the device to be imported.
12. Click [Start] and write the file in the MFP.
13. Check that “Normal” is shown in [Status].
14. Turn OFF the main power switch and turn it ON again more than 10 seconds after.
15. Set the authentication user.

# 2. DF-629/DF-704

## 2.1 CE tool list

| Tool name | Shape | Quantity | Parts No. | Remarks |
|---|---|---|---|---|
| DF reading chart | 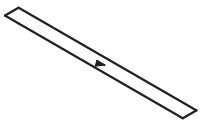 | 1 | 9J06 PJG1 XX | |

# F PERIODICAL MAINTENANCE

## 1. Concept of periodical maintenance

- Cleaning/replacement cycle for each maintenance item of main body/options can be evaluated with the total counter or each life counter value of [Service Mode] -> [Counter] -> [Life].

# 2. Periodical maintenance items

## 2.1 Main unit

### 2.1.1 bizhub C368

#### (1) Periodical maintenance 1 (Total counter; every 60,000 counts)

| No. | Section | Description/part name | Qt. | Clean | Check | Replace | Descriptions |
|---|---|---|---|---|---|---|---|
| 1 | Overall | Paper feed and image conditions | - | | ● | | |
| 2 | | Appearance | - | ● | ● | | |
| 3 | Conveyance section | Registration roller | - | ● | | | |
| 4 | Image transfer section | Around waste toner port | - | ● | | | |
| 5 | Duplex section | Duplex transport roller | - | ● | | | |

#### (2) Periodical maintenance 2 (Field standard yield; every 90,000 sheets)

| No. | Section | Description/part name | Qt. | Clean | Check | Replace | Descriptions |
|---|---|---|---|---|---|---|---|
| 1 | Processing section | Drum unit/Y,M,C | 1 | | | ● | |

#### (3) Periodical maintenance 3 (Field standard yield; every 120,000 sheets)

| No. | Section | Description/part name | Qt. | Clean | Check | Replace | Descriptions |
|---|---|---|---|---|---|---|---|
| 1 | Processing section | Drum unit/K | 1 | | | ● | |

#### (4) Periodical maintenance 4 (Life counter; every 200,000 counts)

| No. | Section | Description/part name | Qt. | Clean | Check | Replace | Descriptions |
|---|---|---|---|---|---|---|---|
| 1 | Paper feed section | Manual bypass tray feed roller | 1 | | | ● | |
| 2 | | Manual bypass tray separation roller assy | 1 | | | ● | |

#### (5) Periodical maintenance 5 (Life counter; every 300,000 counts)

| No. | Section | Description/part name | Qt. | Clean | Check | Replace | Descriptions |
|---|---|---|---|---|---|---|---|
| 1 | Paper feed section | Tray 1 pick-up roller | 1 | | | ● | |
| 2 | | Tray 1 feed roller | 1 | | | ● | |
| 3 | | Tray 1 separation roller | 1 | | | ● | |
| 4 | | Tray 2 pick-up roller | 1 | | | ● | |
| 5 | | Tray 2 feed roller | 1 | | | ● | |
| 6 | | Tray 2 separation roller | 1 | | | ● | |

#### (6) Periodical maintenance 6 (Field standard yield; every 300,000 sheets)

| No. | Section | Description/part name | Qt. | Clean | Check | Replace | Descriptions |
|---|---|---|---|---|---|---|---|
| 1 | Transfer section | Image Transfer Belt Unit | 1 | | | ● | |
| 2 | | Transfer roller unit | 1 | | | ● | * |

- *: The ozone filter and the transfer roller unit are furnished with the transfer belt unit so that all of them are replaced at same time.

#### (7) Periodical maintenance 7 (Field standard yield; every 600,000 sheets)

| No. | Section | Description/part name | Qt. | Clean | Check | Replace | Descriptions |
|---|---|---|---|---|---|---|---|
| 1 | Processing section | Developing unit/Y,M,C,K | 1 | | | ● | |
| 2 | Fusing section | Fusing unit | 1 | | | ● | |

### 2.1.2 bizhub C308

#### (1) Periodical maintenance 1 (Total counter; every 60,000 counts)

| No. | Section | Description/part name | Qt. | Clean | Check | Replace | Descriptions |
|---|---|---|---|---|---|---|---|
| 1 | Overall | Paper feed and image conditions | - | | ● | | |
| 2 | | Appearance | - | ● | ● | | |
| 3 | Conveyance section | Registration roller | - | ● | | | |
| 4 | Image transfer section | Around waste toner port | - | ● | | | |
| 5 | Duplex section | Duplex transport roller | - | ● | | | |

#### (2) Periodical maintenance 2 (Field standard yield; every 75,000 sheets)

| No. | Section | Description/part name | Qt. | Clean | Check | Replace | Descriptions |
|---|---|---|---|---|---|---|---|
| 1 | Processing section | Drum unit/Y,M,C | 1 | | | ● | |

**(3) Periodical maintenance 3 (Field standard yield; every 120,000 sheets)**

| No. | Section | Description/part name | Qt. | Clean | Check | Replace | Descriptions |
|---|---|---|---|---|---|---|---|
| 1 | Processing section | Drum unit/K | 1 | | | ● | |

**(4) Periodical maintenance 4 (Life counter; every 200,000 counts)**

| No. | Section | Description/part name | Qt. | Clean | Check | Replace | Descriptions |
|---|---|---|---|---|---|---|---|
| 1 | Paper feed section | Manual bypass tray feed roller | 1 | | | ● | |
| 2 | | Manual bypass tray separation roller assy | 1 | | | ● | |

**(5) Periodical maintenance 5 (Life counter; every 300,000 counts)**

| No. | Section | Description/part name | Qt. | Clean | Check | Replace | Descriptions |
|---|---|---|---|---|---|---|---|
| 1 | Paper feed section | Tray 1 pick-up roller | 1 | | | ● | |
| 2 | | Tray 1 feed roller | 1 | | | ● | |
| 3 | | Tray 1 separation roller | 1 | | | ● | |
| 4 | | Tray 2 pick-up roller | 1 | | | ● | |
| 5 | | Tray 2 feed roller | 1 | | | ● | |
| 6 | | Tray 2 separation roller | 1 | | | ● | |

**(6) Periodical maintenance 6 (Field standard yield; every 300,000 sheets)**

| No. | Section | Description/part name | Qt. | Clean | Check | Replace | Descriptions |
|---|---|---|---|---|---|---|---|
| 1 | Transfer section | Image Transfer Belt Unit | 1 | | | ● | |
| 2 | | Transfer roller unit | 1 | | | ● | Replace it when replacing transfer belt unit. |

**(7) Periodical maintenance 7 (Field standard yield; every 600,000 sheets)**

| No. | Section | Description/part name | Qt. | Clean | Check | Replace | Descriptions |
|---|---|---|---|---|---|---|---|
| 1 | Processing section | Developing unit/Y,M,C,K | 1 | | | ● | |
| 2 | Fusing section | Fusing unit | 1 | | | ● | |

## 2.2 Option

### 2.2.1 DF-704

**(1) Periodical maintenance 1 (total counter; every 50,000 counts)**

| No. | Section | Description/part name | Qt. | Clean | Check | Lubrication | Replace | Descriptions |
|---|---|---|---|---|---|---|---|---|
| 1 | Overall | Paper feed and image conditions | - | | ● | | | |
| 2 | | Appearance | - | ● | ● | | | |
| 3 | Paper feed section | Pick-up roller | - | ● | | | | |
| 4 | | Feed roller | - | ● | | | | |
| 5 | | Separation roller | - | ● | | | | |
| 6 | Conveyance section | Rollers and rolls | - | ● | | | | |
| 7 | Scanning section | Front side scanning guide | - | ● | | | | |
| 8 | Paper feed section, Conveyance section | Reflective sensor section | - | ● | | | | |

**(2) Periodical maintenance 2 (life counter; every 200,000 counts)**

| No. | Section | Description/part name | Qt. | Clean | Check | Lubrication | Replace | Descriptions |
|---|---|---|---|---|---|---|---|---|
| 1 | Paper feed section | Pick-up roller | 2 | | | | ● | |
| 2 | | Feed roller | 1 | | | | ● | * |
| 3 | | Separation roller assy | 1 | | | | ● | |

*: Replace those three parts at the same time.

### 2.2.2 DF-629

**(1) Periodical maintenance 1 (total counter; every 50,000 counts)**

| No. | Section | Description/part name | Qt. | Clean | Check | Lubrication | Replace | Descriptions |
|---|---|---|---|---|---|---|---|---|
| 1 | Overall | Paper feed and image conditions | - | | ● | | | |

| No. | Section | Description/part name | Qt. | Clean | Check | Lubrication | Replace | Descriptions |
|---|---|---|---|---|---|---|---|---|
| 2 | | Appearance | - | ● | ● | | | |
| 3 | Paper feed section | Pick-up roller | - | ● | | | | |
| 4 | | Feed roller | - | ● | | | | |
| 5 | | Separation roller | - | ● | | | | |
| 6 | Conveyance section | Rollers and rolls | - | ● | | | | |
| 7 | Scanning section | Scanning guide | - | ● | | | | |
| 8 | Paper feed section, Conveyance section | Reflective sensor section | - | ● | | | | |

**(2) Periodical maintenance 2 (life counter; every 200,000 counts)**

| No. | Section | Description/part name | Qt. | Clean | Check | Lubrication | Replace | Descriptions |
|---|---|---|---|---|---|---|---|---|
| 1 | Paper feed section | Pick-up roller | 2 | | | | ● | |
| 2 | | Feed roller | 1 | | | | ● | * |
| 3 | | Separation roller assy | 1 | | | | ● | |

*: Replace those three parts at the same time.

### 2.2.3 PC-110/PC-410

**(1) Periodical maintenance 1 (life counter; every 300,000 counts)**

| No. | Section | Description/part name | Qt. | Clean | Check | Lubrication | Replace | Descriptions |
|---|---|---|---|---|---|---|---|---|
| 1 | Overall | Paper feed and image conditions | - | | ● | | | |
| 2 | | Appearance | - | ● | ● | | | |
| 3 | Paper feed section | Pick-up roller | 1 | | | | ● | |
| 4 | | Feed roller | 1 | | | | ● | * |
| 5 | | Separation roller | 1 | | | | ● | |

*: Replace those three parts at the same time.

### 2.2.4 PC-210

**(1) Periodical maintenance 1 (life counter; every 300,000 counts)**

| No. | Section | Description/part name | Qt. | Clean | Check | Lubrication | Replace | Descriptions |
|---|---|---|---|---|---|---|---|---|
| 1 | Overall | Paper feed and image conditions | - | | ● | | | |
| 2 | | Appearance | - | ● | ● | | | |
| 3 | Paper feed section | Pick-up roller | 2 | | | | ● | |
| 4 | | Feed roller | 2 | | | | ● | * |
| 5 | | Separation roller | 2 | | | | ● | |

*: Replace those three parts at the same time.

### 2.2.5 FS-534

**(1) Periodical maintenance 1 (total counter; every 300,000 counts)**

| No. | Section | Description/part name | Qt. | Clean | Check | Lubrication | Replace | Descriptions |
|---|---|---|---|---|---|---|---|---|
| 1 | Overall | Paper feed and image conditions | - | | ● | | | |
| 2 | | Appearance | - | ● | ● | | | |
| 3 | Conveyance section | Roller and rolls | - | ● | | | | |
| 4 | | Paddle | 6 | ● | | | | |

**(2) Periodical maintenance 2 (life counter; every 2,000,000 counts)**

| No. | Section | Description/part name | Qt. | Clean | Check | Lubrication | Replace | Descriptions |
|---|---|---|---|---|---|---|---|---|
| 1 | Conveyance section | Paddle unit | 3 | | | | ● | |

### 2.2.6 FS-534SD

**(1) Periodical maintenance 1 (total counter; every 300,000 counts)**

| No. | Section | Description/part name | Qt. | Clean | Check | Lubrication | Replace | Descriptions |
|---|---|---|---|---|---|---|---|---|
| 1 | Overall | Paper feed and image conditions | - | | ● | | | |
| 2 | | Appearance | - | ● | ● | | | |
| 3 | Conveyance section (Finisher) | Roller and rolls | - | ● | | | | |
| 4 | | Paddle | 6 | ● | | | | |

| No. | Section | Description/part name | Qt. | Clean | Check | Lubrication | Replace | Descriptions |
|---|---|---|---|---|---|---|---|---|
| 5 | Conveyance section (saddle unit) | Duplex transport roller | - | ● | | | | |
| 6 | | Upper paddle | 4 | ● | | | | |
| 7 | | Lower paddle | 8 | ● | | | | |
| 8 | Folding section | Folding roller | - | ● | | | | |

**(2) Periodical maintenance 2 (life counter; every 2,000,000 counts)**

| No. | Section | Description/part name | Qt. | Clean | Check | Lubrication | Replace | Descriptions |
|---|---|---|---|---|---|---|---|---|
| 1 | Conveyance section (Finisher) | Paddle unit | 3 | | | | ● | |
| 2 | Conveyance section (saddle unit) | Upper paddle assy | 1 | | | | ● | |
| 3 | | Lower paddle unit | 4 | | | | ● | |

### 2.2.7 FS-533

**(1) Periodical maintenance 1 (total counter; every 300,000 counts)**

| No. | Section | Description/part name | Qt. | Clean | Check | Lubrication | Replace | Descriptions |
|---|---|---|---|---|---|---|---|---|
| 1 | Overall | Paper feed and image conditions | - | | ● | | | |
| 2 | | Appearance | - | ● | ● | | | |
| 3 | Conveyance section | Roller and rolls | - | ● | | | | |
| 4 | Paper exit section | Paddle | 4 | ● | | | | |

**(2) Periodical maintenance 2 (life counter; every 1,000,000 counts)**

| No. | Section | Description/part name | Qt. | Clean | Check | Lubrication | Replace | Descriptions |
|---|---|---|---|---|---|---|---|---|
| 1 | Alignment section | Alignment roller assy/ F | 1 | | | | ● | * |
| 2 | | Alignment roller assy/ R | 1 | | | | ● | |

*: Replace those three parts at the same time.

# 3. Periodical replacement parts list

- To ensure that the machine produces good copies and to extend its service life, it is recommended that the maintenance jobs described in this schedule be carried out as instructed.
- The replacement period is determined by the total counter value, various life counter values, number of field standard yields, or the message displayed on the control panel.
- Maintenance conditions are based on the case of A4 or 8 $^{1}/_{2}$ x 11, standard mode and low power mode OFF.

| | | Color | Black |
|---|---|---|---|
| Standard mode | bizhub C368 | 4 pages per job | 4 pages per job |
| | bizhub C308 | 3 pages per job | 3 pages per job |

## 3.1 bizhub C368/C308/C258

| Classification | Parts name | | Parts No. | Qt. | Replacing cycle | Descriptions | Ref. page |
|---|---|---|---|---|---|---|---|
| Paper feed section | Tray 1 pick-up roller | | A5C1 5622 ## | 1 | 300,000 | *2 *4 | F.6.7.1 Replacing the tray 1 feed roller, tray 1 pick-up roller, tray 1 separation roller |
| | Tray 1 feed roller | | A00J 5636 ## | 1 | 300,000 | | |
| | Tray 1 separation roller | | | 1 | 300,000 | | |
| | Tray 2 pick-up roller | | A5C1 5622 ## | 1 | 300,000 | *2 *4 | F.6.7.2 Replacing the tray 2 feed roller, tray 2 pick-up roller, tray 2 separation roller |
| | Tray 2 feed roller | | A00J 5636 ## | 1 | 300,000 | | |
| | Tray 2 separation roller | | | 1 | 300,000 | | |
| | Manual bypass tray feed roller | | A00F 6232 ## | 1 | 200,000 | *2 *4 | F.6.7.3 Replacing the manual bypass tray feed roller, manual bypass tray separation roller assy |
| | Manual bypass tray separation roller assy | | 4658 0151 ## | 1 | 200,000 | | |
| Processing section | Toner cartridge/Y,M,C *1 | bizhub C368 | - | 1 | 26,000 | - | F.6.3.1 Replacing the toner cartridge |
| | | bizhub C308 | - | 1 | 26,000 | | |
| | | bizhub C258 | - | 1 | 26,000 | | |
| | Toner cartridge/K *1 | bizhub C368 | - | 1 | 28,000 | - | |
| | | bizhub C308 | - | 1 | 28,000 | | |
| | | bizhub C258 | - | 1 | 28,000 | | |
| | Drum unit/Y,M,C *1 | bizhub C368 | - | 1 | 90,000 | *3 | F.6.1.1 Replacing the drum unit |
| | | bizhub C308 | - | 1 | 75,000 | | |
| | | bizhub C258 | - | 1 | 55,000 | | |
| | Drum unit/K *1 | bizhub C368 | - | 1 | 120,000 | *3 | |
| | | bizhub C308 | - | 1 | 120,000 | | |
| | | bizhub C258 | - | 1 | 90,000 | | |
| | Developing unit/Y,M,C,K | bizhub C368 | - | 1 | 600,000 | *3 | F.6.2.1 Replacing the developing unit |
| | | bizhub C308 | - | 1 | 600,000 | | |
| | | bizhub C258 | - | 1 | 600,000 | | |
| | Waste toner box *1 | bizhub C368 | • A4NN WY3 (North America and Europe)<br>• A4NN WY1 (Other) | 1 | 33,000 | *3 | F.6.6.1 Replacing the waste toner box |
| | | bizhub C308 | | 1 | 30,000 | | |
| | | bizhub C258 | | 1 | 30,000 | | |
| Image transfer section | Image Transfer Belt Unit | bizhub C368 | A161 R713 ## | 1 | 300,000 | *3 | F.6.4.3 Replacing the transfer belt unit |
| | | bizhub C308 | | 1 | 300,000 | | |
| | | bizhub C258 | | 1 | 300,000 | | |
| | Transfer Roller Unit | bizhub C368 | A161 R714 ## | 1 | 300,000 | *3 *5 | F.6.5.1 Replacing the transfer roller unit |
| | | bizhub C308 | | 1 | 300,000 | | |
| | | bizhub C258 | | 1 | 300,000 | | |
| Fusing section | Fusing unit | bizhub C368 | • A7PU R702 ## (100V)<br>• A7PU R703 ## (120V)<br>• A7PU R704 ## (220-240V) | 1 | 600,000 | *3 | F.6.9.1 Replacing the fusing unit |
| | | bizhub C308 | | 1 | 600,000 | | |
| | | bizhub C258 | | 1 | 600,000 | | |

*1: The parts can be replaced either by user or service engineer.
*2: Actual durable cycle (life counter value)
*3: Field standard yield C.1.4 Material
*4: Replace those three parts at the same time.
*5: The transfer roller unit is furnished with the transfer belt unit so that all of them are replaced at same time.

## 3.2 Option

### 3.2.1 DF-704

| Parts name | Parts No. | Qt. | Replacing cycle | Descriptions | Ref. page |
|---|---|---|---|---|---|
| Pick-up roller | A143 PP52 ## | 2 | 200,000 | *1 *2 | F.8. Periodical maintenance procedure DF-704 |
| Feed roller | A143 5631 ## | 1 | 200,000 | | |
| Paper feed assy. | A85G PP0P ## | 1 | 200,000 | | |
| Separation roller assy. | A3CF PP4H ## | 1 | 200,000 | | |

*1: Actual durable cycle (life counter value)
*2: Replace those three parts at the same time.

### 3.2.2 DF-629

| Parts name | Parts No. | Qt. | Replacing cycle | Descriptions | Ref. page |
|---|---|---|---|---|---|
| Pick-up roller | A143 PP52 ## | 2 | 200,000 | *1 *2 | F.7. Periodical maintenance procedure DF-629 |
| Feed roller | A143 5631 ## | 1 | 200,000 | | |
| Paper feed assy. | A85G PP0P ## | 1 | 200,000 | | |
| Separation roller assy | A3CF PP4H ## | 1 | 200,000 | | |

*1: Actual durable cycle (life counter value)
*2: Replace those three parts at the same time.

### 3.2.3 PC-110

| Parts name | Parts No. | Qt. | Replacing cycle | Descriptions | Ref. page |
|---|---|---|---|---|---|
| Pick-up roller | A5C1 5622 ## | 1 | 300,000 | *1 *2 | F.9.1.1 Replacing the tray 3 feed roller, tray 3 pick-up roller, tray 3 separation roller |
| Feed roller | A00J 5636 ## | 1 | 300,000 | | |
| Separation roller | A00J 5636 ## | 1 | 300,000 | | |

*1: Actual durable cycle (life counter value)
*2: Replace those three parts at the same time.

### 3.2.4 PC-210

| Parts name | Parts No. | Qt. | Replacing cycle | Descriptions | Ref. page |
|---|---|---|---|---|---|
| Pick-up roller | A5C1 5622 ## | 2 | 300,000 | *1 *2 | F.9.1.1 Replacing the tray 3 feed roller, tray 3 pick-up roller, tray 3 separation roller<br>F.9.1.2 Replacing the tray 4 feed roller, tray 4 pick-up roller, tray 4 separation roller |
| Feed roller | A00J 5636 ## | 2 | 300,000 | | |
| Separation roller | A00J 5636 ## | 2 | 300,000 | | |

*1: Actual durable cycle (life counter value)
*2: Replace those three parts at the same time.

### 3.2.5 PC-410

| Parts name | Parts No. | Qt. | Replacing cycle | Descriptions | Ref. page |
|---|---|---|---|---|---|
| Pick-up roller | A5C1 5622 ## | 1 | 300,000 | *1 *2 | F.10.1.1 Replacing the feed roller, pick-up roller, separation roller |
| Feed roller | A00J 5636 ## | 1 | 300,000 | | |
| Separation roller | A00J 5636 ## | 1 | 300,000 | | |

*1: Actual durable cycle (life counter value)
*2: Replace those three parts at the same time.

### 3.2.6 LU-302

| Parts name | Parts No. | Qt. | Replacing cycle | Descriptions | Ref. page |
|---|---|---|---|---|---|
| Pick-up roller | A5C1 5622 ## | 1 | 300,000 | *1 *2 | F.11.1.1 Replacing the pick-up roller |
| Feed roller | A00J 5636 ## | 1 | 300,000 | | F.11.1.2 Replacing the feed roller |
| Separation roller | A00J 5636 ## | 1 | 300,000 | | F.11.1.3 Replacing the separation roller |

- *1: Actual durable cycle (life counter value)
- *2: Replace those three parts at the same time.

### 3.2.7 FS-534

| Parts name | Parts No. | Qt. | Replacing cycle | Descriptions | Ref. page |
|---|---|---|---|---|---|
| Paddle unit | A3EP PPD3 ## | 2 | 2,000,000 | *1 | F.12.1.3 Replacing the paddle units |
| | A3EP PPD4 ## | 1 | 2,000,000 | | |

*1: Actual durable cycle (life counter value)

### 3.2.8 FS-534SD

| Parts name | Parts No. | Qt. | Replacing cycle | Descriptions | Ref. page |
|---|---|---|---|---|---|
| Paddle unit | A3EP PPD3 ## | 2 | 2,000,000 | *1 | F.12. Periodical maintenance procedure FS-534/FS-534SD |
| | A3EP PPD4 ## | 1 | 2,000,000 | *1 | |
| Upper paddle assy | A3ER PP38 ## | 1 | 2,000,000 | *1 | F.12.1.7 Replacing the upper paddle assy |
| Lower paddle unit | A3ER PP7Y ## | 4 | 2,000,000 | *1 | F.12.1.8 Replacing the lower paddle unit |

*1: Actual durable cycle (life counter value)

### 3.2.9 FS-533

| Parts name | Parts No. | Qt. | Replacing cycle | Descriptions | Ref. page |
|---|---|---|---|---|---|
| Alignment roller assy/ F | A2YU PPK0 ## | 1 | 1,000,000 | *1<br>*2 | F.13. Periodical maintenance procedure FS-533 |
| Alignment roller assy/ R | A2YU PPK1 ## | 1 | 1,000,000 | | |

*1: Actual durable cycle (life counter value)
*2: Replace those three parts at the same time.

# 4. Periodical cleaning parts list

- Clean with reference to the numeric values displayed on the total counter, the life counter or the messages displayed on the control panel.

## 4.1 Main unit

| Classification | Parts name | Cleaning cycle | Descriptions | Ref. page |
|---|---|---|---|---|
| Conveyance section | Registration roller | 60,000 | *1 | F.6.8.1 Cleaning of the registration roller |
| Image transfer section | Area around the waste toner collecting port | 60,000 | *1 | F.6.6.2 Cleaning of the area around the waste toner collecting port |
| | Image transfer entrance guide | 240,000 or When transfer belt unit is replaced | *1 | F.6.4.1 Cleaning of the image transfer entrance guide |
| | IDC sensor window | 240,000 or When transfer belt unit is replaced | *1 | F.6.4.2 Cleaning of the IDC sensor window |
| Duplex section | Duplex transport roller | 60,000 | *1 | F.6.10.1 Cleaning of the duplex transport rollers |

*1: Total counter value

## 4.2 DF-704

| Parts name | Cleaning cycle | Descriptions | Ref. page |
|---|---|---|---|
| Pick-up roller | 50,000 | *1 | F.8. Periodical maintenance procedure DF-704 |
| Feed roller | 50,000 | *1 | |
| Separation roller | 50,000 | *1 | |
| Rollers and rolls | 50,000 | *1 | |
| Front side scanning guide | 50,000 | *1 | |
| Reflective sensor section | 50,000 | *1 | |

*1: Total counter value

## 4.3 DF-629

| Parts name | Cleaning cycle | Descriptions | Ref. page |
|---|---|---|---|
| Pick-up roller | 50,000 | *1 | F.7. Periodical maintenance procedure DF-629 |
| Feed roller | 50,000 | *1 | |
| Separation roller | 50,000 | *1 | |
| Rollers and rolls | 50,000 | *1 | |
| Scanning guide | 50,000 | *1 | |
| Reflective sensor section | 50,000 | *1 | |

*1: Total counter value

## 4.4 FS-534

| Parts name | Cleaning cycle | Descriptions | Ref. page |
|---|---|---|---|
| Roller and rolls | 300,000 | *1 | F.12. Periodical maintenance procedure FS-534/FS-534SD |
| Paddle | 300,000 | *1 | |

*1: Total counter value

## 4.5 FS-534SD

| Parts name | Cleaning cycle | Descriptions | Ref. page |
|---|---|---|---|
| Roller and rolls | 300,000 | *1 | F.12. Periodical maintenance procedure FS-534/FS-534SD |
| Paddle | 300,000 | *1 | |
| Conveyance roller | 300,000 | *1 | |
| Folding roller | 300,000 | *1 | |
| Upper paddle | 300,000 | *1 | |
| Lower paddle | 300,000 | *1 | |

*1: Total counter value

## 4.6 FS-533

| Parts name | Cleaning cycle | Descriptions | Ref. page |
|---|---|---|---|

| | | | |
|---|---|---|---|
| Roller and rolls | 300,000 | *1 | F.13. Periodical maintenance procedure FS-533 |
| Paddle | 300,000 | *1 | |

*1: Total counter value

# 5. Concept of parts life

## 5.1 Life value of consumables and parts

- The life counter value of each material and parts is available from [Service Mode] -> [Counter] -> [Life].
- Life specification value means an actual life terminated when prints are made under the conditions as defined in the next section, “Conditions for life specifications values.”
  The actual life may vary greatly depending on how the machine has been used and other factors.
- “M” refers to the rotation time of each unit.

| Consumables/parts name | Target model | Field standard yield *1 | Near life | Life | Life stop |
|---|---|---|---|---|---|
| Drum unit (C/M/Y) | C368 | 90,000 sheets | - | 6303M | 6876M |
| | C308 | 75,000 sheets | - | 7150M | 7847M |
| | C258 | 55,000 sheets | - | 7150M | 7847M |
| Drum unit (K) | C368 | 120,000 sheets | - | 6303M | 6876M |
| | C308 | 120,000 sheets | - | 7193M | 7847M |
| | C258 | 90,000 sheets | - | 7193M | 7847M |
| Developing Unit | C368 | 600,000 sheets | - | 600,000 counts | 610,000 counts |
| | C308 | 600,000 sheets | - | 600,000 counts | 610,000 counts |
| | C258 | 600,000 sheets | - | 600,000 counts | 610,000 counts |
| Image Transfer Belt Unit | C368 | 300,000 sheets | - | 22088M | 24096M |
| | C308 | 300,000 sheets | - | 26960M | 29411M |
| | C258 | 300,000 sheets | - | 26960M | 29411M |
| Transfer roller | C368 | 300,000 sheets | - | 22088M | 24096M |
| | C308 | 300,000 sheets | - | 26960M | 29411M |
| | C258 | 300,000 sheets | - | 26960M | 29411M |
| Toner cartridge (C/M/Y) | C368 | - | 25,000 sheets | 26,000 sheets | - |
| | C308 | - | 25,000 sheets | 26,000 sheets | - |
| | C258 | - | 25,000 sheets | 26,000 sheets | - |
| Toner cartridge (K) | C368 | - | 27,000 sheets | 28,000 sheets | - |
| | C308 | - | 27,000 sheets | 28,000 sheets | - |
| | C258 | - | 27,000 sheets | 28,000 sheets | - |
| Waste toner box | C368 | - | 31,000 sheets | 33,000 sheets | - |
| | C308 | - | 28,000 sheets | 30,000 sheets | - |
| | C258 | - | 28,000 sheets | 30,000 sheets | - |
| Fusing Unit | C368 | 600,000 sheets | - | 600,000 counts | 630,000 counts |
| | C308 | 600,000 sheets | - | 600,000 counts | 630,000 counts |
| | C258 | 600,000 sheets | - | 600,000 counts | 630,000 counts |

- *: For details of conditions of field standard yield, see “C.1.4 Material”.

## 5.2 Details of the life specifications

| Item | Description |
|---|---|
| Waste toner box | The waste toner full sensor detects near full for the toner replenishment level of the waste toner box. When the waste toner near full is detected, the waste toner counter starts counting, and the waste toner full is detected when the life threshold is reached. |
| Fusing unit | When the number of printed pages *1 reaches the set life value, the end of unit life is detected. |
| Image Transfer Belt Unit | Number of prints *1 and rotation time of the transfer belt are counted, and detected when one of those two reaches to the life value. |
| Transfer Roller Unit | Rotation time of the transfer belt is counted, and detected when it reaches to the set life value. *2 |
| Drum unit (Y/M/C/K) | Rotation time of the photo conductor and number of prints *1 are counted, and detected when one of those values reaches to the set life value. However, only the photo conductor rotation time is available from the life counter. |
| Developing unit (Y/M/C/K) | When the number of printed pages *1 reaches the set life value, the end of unit life is detected. |

*1: For counting with number of prints, the paper length is accumulated and counts one when it reaches to 216.0 mm. For the paper length of less than 216.0mm, it is accumulated with the paper length of 216.0 mm.
*2: As the transfer roller unit and the ozone filter are included in the transfer belt unit, they are replaced all together. When the transfer belt unit is replaced and New Release is performed, the life counter value is reset.

## 5.3 Control causing inhibited printing for one part when an inhibited-printing event occurs in another part

### 5.3.1 Outline

- In order to reduce the maintenance call times: when printing prohibiting is reached for any of the following parts, make printing prohibited also for other parts whose life value is reached, and replace those parts at the same time.

**NOTE**

- **This control can be disabled by changing the setting in switch No. 14 in [Service Mode] -> [Enhanced Security] -> [Engine FW DipSW].**

### 5.3.2 Target parts

- Drum unit with all colors are subjected. Other consumables are exempt.

### 5.3.3 Threshold value

- The one which has reached its value are judged as “printing prohibited” regardless of the difference with its maximum life value.

# 6. Periodical maintenance procedure bizhub C368/C308/C258

**NOTE**

- **The alcohol described in the cleaning procedure of maintenance represents the isopropyl alcohol.**

## 6.1 Photo conductor section

### 6.1.1 Replacing the drum unit

#### (1) Periodically replacing parts/cycle

- Drum unit/Y,M,C: Every 90,000 sheets (bizhub C368)
- Drum unit/Y,M,C: Every 75,000 sheets (bizhub C308)
- Drum unit/Y,M,C: Every 55,000 sheets (bizhub C258)
- Drum unit/K: Every 120,000 sheets (bizhub C368)
- Drum unit/K: Every 120,000 sheets (bizhub C308)
- Drum unit/K: Every 90,000 sheets (bizhub C258)

**NOTE**

- **The following shows the procedure for replacing the drum unit/M, but take the same procedure for the drum unit/Y, C, K.**

#### (2) Removal procedure

1. Open the front door.
2. Remove the waste toner box.
   F.6.6.1 Replacing the waste toner box

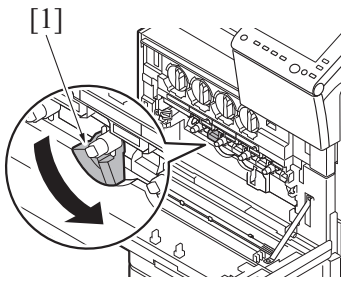


3. Turn the drum unit lock lever [1] and release the lock.

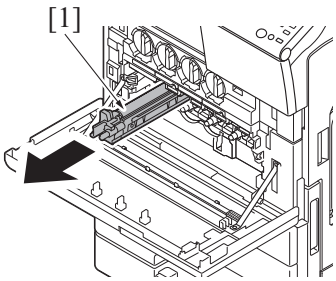


4. Pull the drum unit [1] to you and remove it from the machine.

#### (3) Reinstall procedure

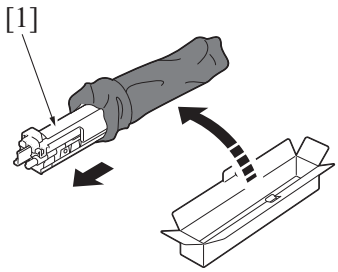


1. Remove the drum unit [1] from its package.
2. Remove the drum unit [1] from the plastic bag.

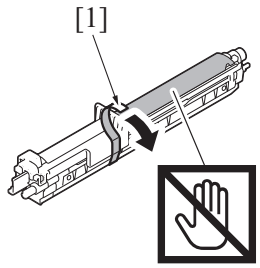


3. Peel off the tape [1].
**NOTE**
- **Do not hold the drum unit by the upper part. Holding it by the upper part can cause scratches on the surface of the photo conductor, resulting in the deterioration of image quality.**

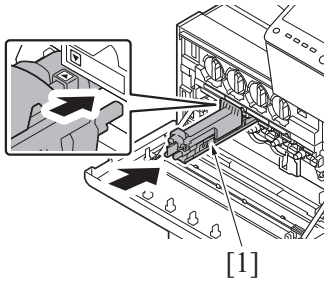


4. Put the label. (Drum unit/Y,M,C only)
5. Align the "▲" mark on the drum unit with the "▼" mark on the machine and insert the drum unit [1] into the machine.

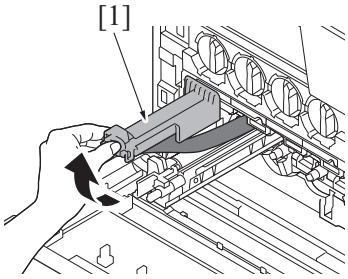


6. Remove the photo conductor protective sheet [1].

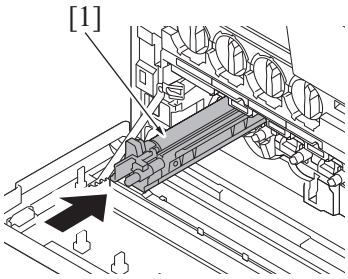


7. Completely insert the drum unit [1].

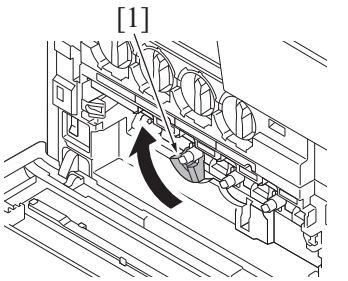


8. Turn the drum unit lock lever [1] and lock the drum unit.
**NOTE**
- **If the lock lever is hard to rotate, turn the lever while pushing the drum unit to the rear.**

9. Reinstall the waste toner box.
10. Close the front door.
11. Select [Service Mode] -> [Imaging Process Adjustment] -> [Gradation Adjust] and carry out gradation adjust.

## 6.2 Developing section

### 6.2.1 Replacing the developing unit

#### (1) Periodically replacing parts/cycle

- Developing unit : Every 600,000 (bizhub C368)

- Developing unit : Every 600,000 (bizhub C308)
- Developing unit : Every 600,000 (bizhub C258)

**NOTE**

- **Although the procedure shown below is for the replacement of the developing unit/Y, use the same procedure to replace other developing units.**

### (2) Procedure

1. Open the front door.
2. Remove the waste toner box.
   F.6.6.1 Replacing the waste toner box
3. Remove the front lower cover.
   G.5.2.14 Front lower cover
4. Remove the drum unit/Y.
   F.6.1.1 Replacing the drum unit

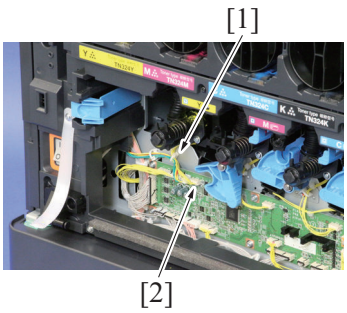


5. Remove the harness from the wire saddle [1], and disconnect the connector [2].

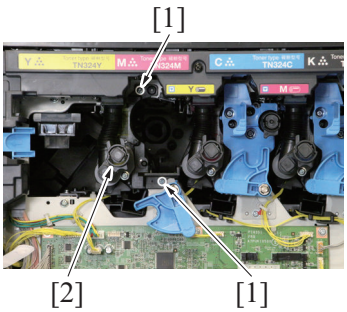


6. Remove two screws [1], and remove the developing unit [2].

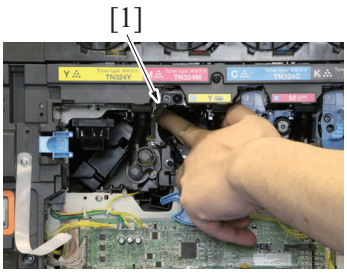


7. To reinstall, reverse the order of removal.
   **NOTE**
   - **To install the two screws in the developing unit, press the position [1] with your finger as shown in the illustration.**

8. Carry out the [Service Mode] -> [Image Process Adjustment] -> [Gradation Adjust].

## 6.3 Toner supply section

### 6.3.1 Replacing the toner cartridge

#### (1) Periodically replacing parts/cycle

- Toner cartridge/Y,M,C : Every 25,000 prints (bizhub C368)
- Toner cartridge/Y,M,C : Every 25,000 prints (bizhub C308)
- Toner cartridge/Y,M,C : Every 25,000 prints (bizhub C258)
- Toner cartridge/K : Every 27,000 prints (bizhub C368)
- Toner cartridge/K : Every 27,000 prints (bizhub C308)
- Toner cartridge/K : Every 27,000 prints (bizhub C258)

#### (2) Removal procedure

1. Open the front door.

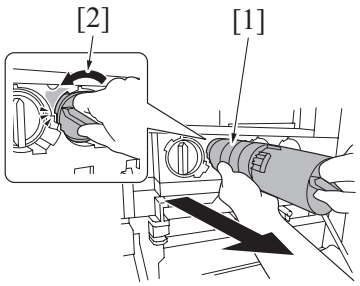


2. Turn the toner cartridge [1] in the direction [2] as shown in the illustration to release the lock.
3. Remove the toner cartridge [1].

### (3) Reinstall procedure

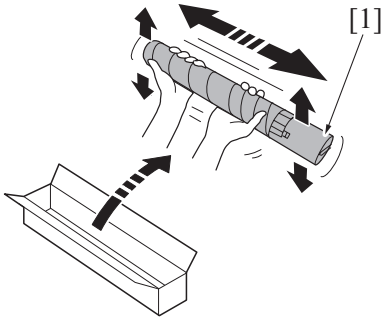


1. Remove the new toner cartridge [1] from its packaging, and the shake the cartridge side to side 5 to 10 times.
**NOTE**
- **Shake the toner cartridge well.**
**If shaking is not enough, that may cause trouble.**

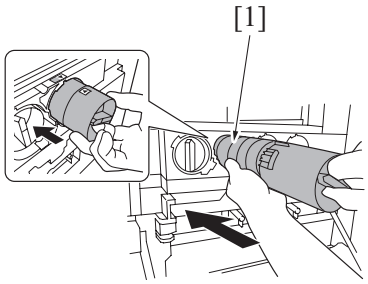


2. Insert the toner cartridge [1] into the machine.
**NOTE**
- **Make sure that the toner cartridge is the same color as the label in the cartridge compartment.**
- **Make sure that the blue label position of the toner cartridge is matched with the one of the machine side.**

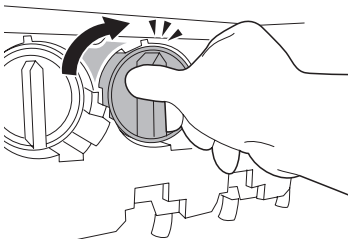

3. Completely insert the toner cartridge into the machine and turn it in the direction as shown in the illustration in order to fix the toner cartridge.

## 6.4 1st transfer section

### 6.4.1 Cleaning of the image transfer entrance guide

#### (1) Periodically cleaning parts/cycle

- Image transfer entrance guide: Every 240,000 counts or when the transfer belt unit is replaced.

#### (2) Procedure

1. Remove the transfer belt unit.
F.6.4.3 Replacing the transfer belt unit

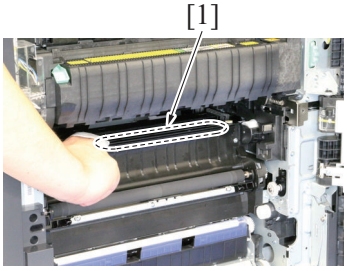


2. Wipe the image transfer entrance guide [1] clean of spilled toner and dirt using a cleaning pad with water or alcohol.

### 6.4.2 Cleaning of the IDC sensor window

#### (1) Periodically cleaning parts/cycle

- IDC sensor window: Every 240,000 counts or when the transfer belt unit is replaced.

#### (2) Procedure

1. Remove the transfer belt unit.
   F.6.4.3 Replacing the transfer belt unit

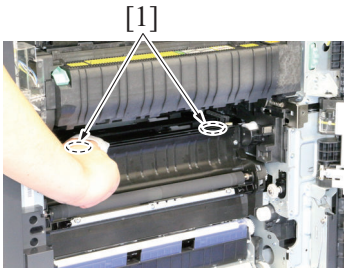


2. Wipe the surface of the IDC sensor window [1] clean of spilled toner and dirt.
   **NOTE**
   - **Do not wipe out with any solvents or alcohols.**

### 6.4.3 Replacing the transfer belt unit

#### (1) Periodically replacing parts/cycle

- Transfer belt unit : Every 300,000 sheets (bizhub C368)
- Transfer belt unit : Every 300,000 sheets (bizhub C308)
- Transfer belt unit : Every 300,000 sheets (bizhub C258)

**NOTE**

- **Before replacement operations of the transfer belt unit, make sure to turn OFF the main power switch.**

#### (2) Removal procedure

1. Remove the waste toner box.
   F.6.6.1 Replacing the waste toner box
2. Open the right door and the regist unit.

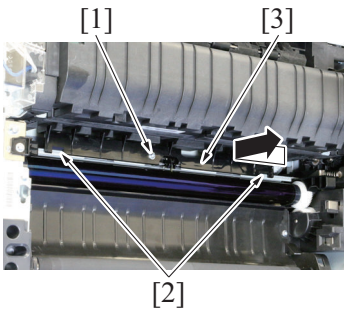


3. Remove the screw [1] and two tabs [2], and remove the 2nd transfer paper winding prevention guide [3].

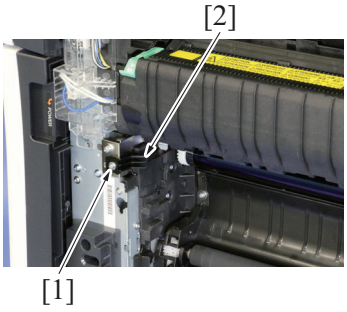


4. Remove the screw [1], and remove the stopper [2].

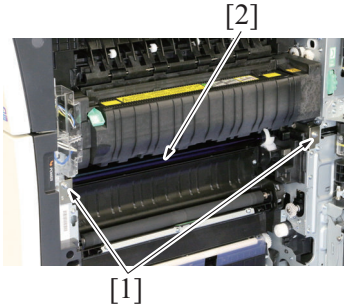


5. Remove two screws [1] and unlock the transfer belt unit [2].

6. Hold the both sides and lift it to take out the transfer belt unit [1] a little.

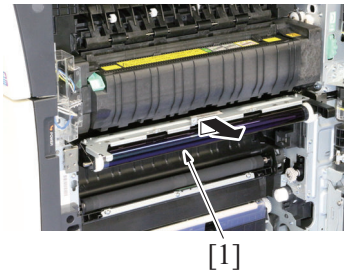


7. Hold the position [1] and remove the transfer belt unit [2].
**NOTE**
- **Do not touch the surface of the Image transfer belt unit.**
- **Cover the image transfer belt unit with something such shade cloth to protect its surface from dust or foreign matter.**
- **If accidentally touched the surface of the transfer belt, lightly wipe it using the Hydro-wipe (65AA-99##). Do not clean with alcohol or water.**

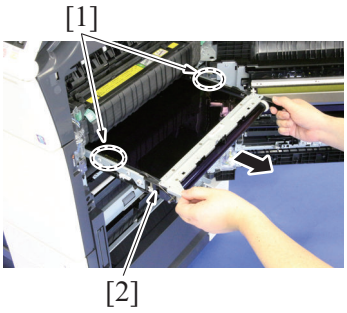


### (3) Reinstall procedure

1. Insert the transfer belt unit [1].
**NOTE**
- **Insert the transfer belt unit with care not to allow its docking gear to be damaged by hitting it against the rail or associated part.**
- **Do not touch the surface of the image transfer belt unit.**
- **Cover the image transfer belt unit with something such shade cloth to protect its surface from dust or foreign matter.**
- **If accidentally touched the surface of the transfer belt, lightly wipe it using the Hydro-wipe (65AA-99##). Do not clean with alcohol or water.**

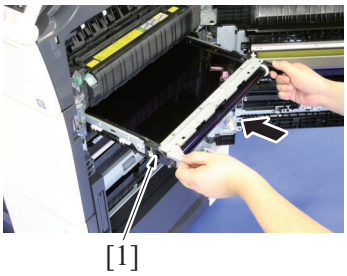


2. Install the transfer belt unit [2] with two screws [1].
**NOTE**
- **Replace the transfer roller unit, which are supplied with the transfer belt unit, at the same time.**

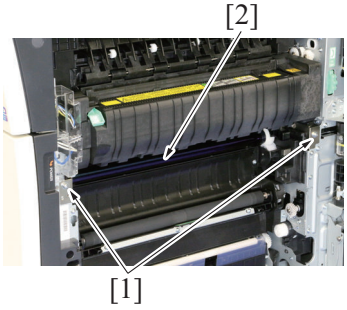


3. Install the 2nd transfer paper winding prevention guide.
4. To reinstall, reverse the order of removal.
5. Turn ON the main power switch.
6. Carry out the [Service Mode] -> [Counter] -> [Life] -> [New Release].
7. Carry out the [Service Mode] -> [Image Process Adjustment] -> [Gradation Adjust].

## 6.5 2nd transfer/separation section

### 6.5.1 Replacing the transfer roller unit

#### (1) Periodically replacing parts/cycle

- Transfer belt unit : Every 300,000 sheets (bizhub C368)
- Transfer belt unit : Every 300,000 sheets (bizhub C308)
- Transfer belt unit : Every 300,000 sheets (bizhub C258)

* The transfer roller unit is supplied with the transfer belt unit, and these are replaced at the same time.

#### (2) Removal procedure

1. Open the right door and the regist unit.

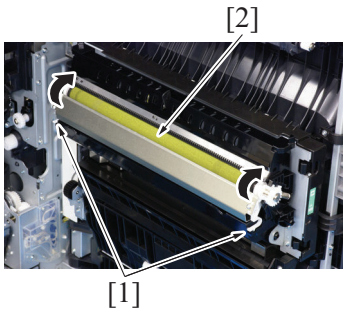


2. Unlock the lock levers [1] of the transfer roller unit (at two places).
3. Holding onto the lock levers [1] (at two places), remove the transfer roller unit [2].

### (3) Reinstall procedure

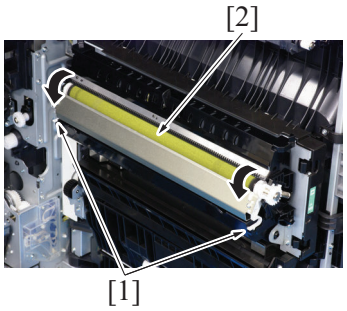


1. Holding onto the lock levers [1] (at two places), mount the new transfer roller unit [2].
2. Lock the lock levers [1] (at two places).
   **NOTE**
   - **Make sure that the levers are locked in position both at front and rear.**

3. Close the right door.

## 6.6 Toner collection section

### 6.6.1 Replacing the waste toner box

#### (1) Periodically replacing parts/cycle

- Waste toner box: Every 33,000 counts (bizhub C368)
- Waste toner box: Every 30,000 counts (bizhub C308)
- Waste toner box: Every 30,000 counts (bizhub C258)

#### (2) Removal procedure

1. Open the front door.

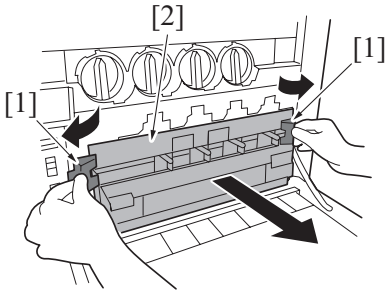


2. Unhook the waste toner box fixing levers [1] and remove the waste toner box [2].
3. Clean the surface around the waste toner collecting port.
   F.6.6.2 Cleaning of the area around the waste toner collecting port

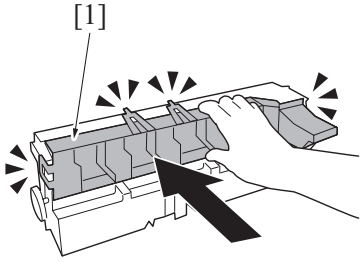


4. Take out the cap [1] from the new waste toner box package, and attach it to the old waste toner box.

### (3) Reinstall procedure

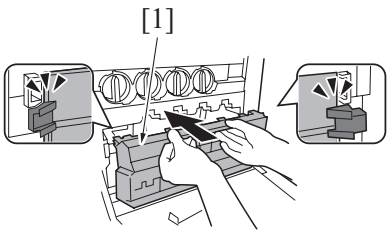


1. Remove the brand new waste toner box from its package and remove the packing material.
2. Set the waste toner box [1].
3. Close the front door.

## 6.6.2 Cleaning of the area around the waste toner collecting port

### (1) Periodically cleaning parts/cycle

- Area around the waste toner collecting port: Every 60,000 counts (upon each call)

### (2) Procedure

1. Remove the waste toner box.
   F.6.6.1 Replacing the waste toner box

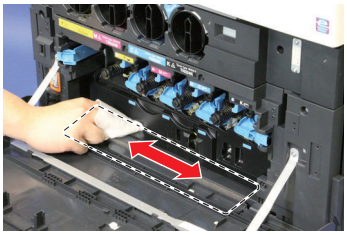

2. Wipe the areas around the waste toner collecting port clean of spilled toner and dirt using a cleaning pad with water or alcohol.

# 6.7 Paper feed section

## 6.7.1 Replacing the tray 1 feed roller, tray 1 pick-up roller, tray 1 separation roller

### (1) Periodically replacing parts/cycle

- Tray 1 feed roller: Every 300,000 counts
- Tray 1 pick-up roller: Every 300,000 counts
- Tray 1 separation roller: Every 300,000 counts

### (2) Procedure

1. Open the right door.
2. Remove the tray 1.
   G.5.2.23 Tray 1
3. Remove the tray 2.
   G.5.2.24 Tray 2

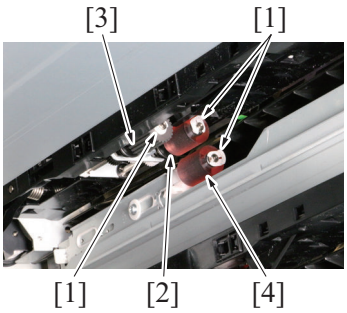


4. Remove the C-clip [1] each, and remove the tray 1 feed roller [2], tray 1 pick-up roller [3] and tray 1 separation roller [4].
5. To reinstall, reverse the order of removal.
6. Select [Service Mode] -> [Counter] -> [Life] and clear the count of [1st.].

## 6.7.2 Replacing the tray 2 feed roller, tray 2 pick-up roller, tray 2 separation roller

### (1) Periodically replacing parts/cycle

- Tray 2 feed roller: Every 300,000 counts
- Tray 2 pick-up roller: Every 300,000 counts
- Tray 2 separation roller: Every 300,000 counts

### (2) Procedure

1. Open the right door.

2. Remove the tray 1.
   G.5.2.23 Tray 1
3. Remove the tray 2.
   G.5.2.24 Tray 2

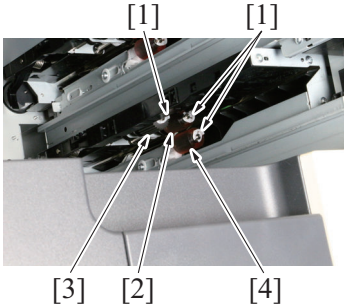


4. Remove the C-clip [1] each, and remove the tray 2 feed roller [2], tray 2 pick-up roller [3] and tray 2 separation roller [4].

5. To reinstall, reverse the order of removal.
6. Select [Service Mode] -> [Counter] -> [Life] and clear the count of [2nd.].

### 6.7.3 Replacing the manual bypass tray feed roller, manual bypass tray separation roller assy

#### (1) Periodically replacing parts/cycle

- Manual bypass tray feed roller: Every 200,000 counts
- Manual bypass tray separation roller assy: Every 200,000 counts

#### (2) Procedure

1. Open the right door.

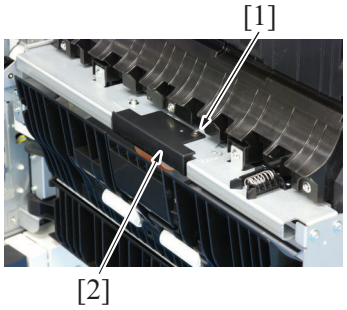


2. Remove the screw [1], and remove the feed roller cover [2].

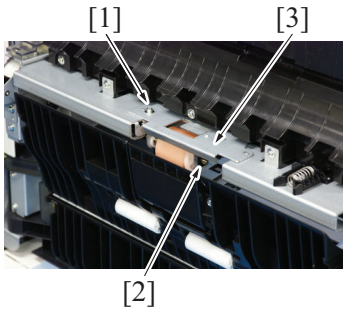


3. Remove the screw [1], and remove the bushing [2] and the metal plate [3].

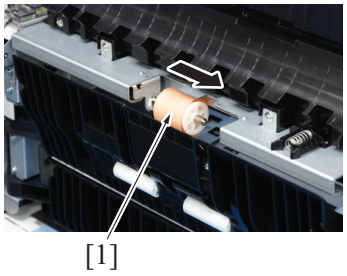


4. Remove the manual bypass tray feed roller [1].

5. Remove the screw [1], and remove the cover [2].

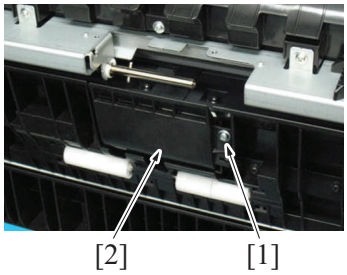


6. Remove the manual bypass tray separation roller unit [1].

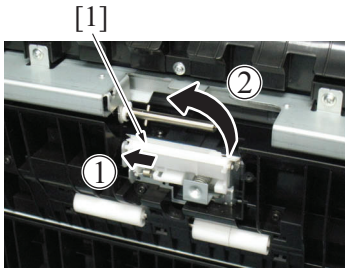


7. Remove the C-ring [1], and remove the manual bypass tray separation roller assy [2].

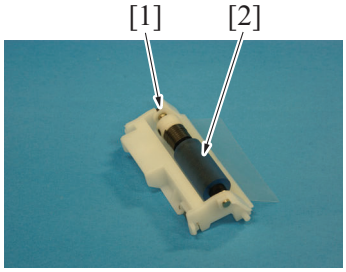


8. To reinstall, reverse the order of removal.
9. Select [Service Mode] -> [Counter] -> [Life ] and clear the count of [Manual Tray].

## 6.8 Registration section

### 6.8.1 Cleaning of the registration roller

#### (1) Periodically cleaning parts/cycle

- Registration roller: Every 60,000 counts (upon each call)

#### (2) Procedure

1. Open the right door and the regist unit.

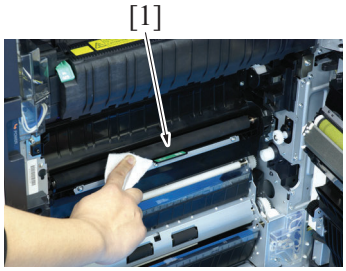


2. Using a cleaning pad with alcohol, wipe the registration roller [1] clean of dirt.

## 6.9 Fusing section

### 6.9.1 Replacing the fusing unit

**CAUTION**

- **The temperature gets high in the vicinity of the fusing unit. You may get burned when you come into contact with the area.**
  **Before replacement operations, make sure that more than 20 minutes have elapsed since the main power switch was turned off.**

#### (1) Periodically replacing parts/cycle

- Fusing unit: Every 600,000 (bizhub C368)
- Fusing unit: Every 600,000 (bizhub C308)
- Fusing unit: Every 600,000 (bizhub C258)

#### (2) Procedure

1. Open the right door and the regist unit.

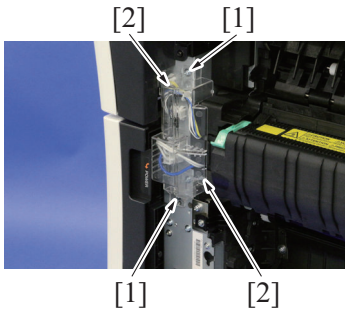


2. Remove the screw [1] each, and remove the two connector protective covers [2].

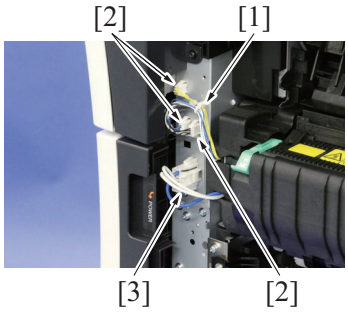


3. Remove the harness from the wire saddle [1].
4. Disconnect three connectors [2].
5. Disconnect the connector [3].
   **NOTE**
   - **When removing the connector [3], press the claw to release the lock, then remove it.**

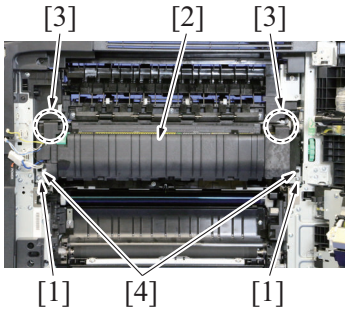


6. Remove two screws [1], and remove the fusing unit [2].
   **NOTE**
   - **When removing the fusing unit, hold the parts [3] shown on the picture so that it would not fall.**
   - **When installing the fusing unit, make sure that the set pin [4] is inserted in the fusing unit.**

7. To reinstall, reverse the order of removal.
8. Carry out the [Service Mode] -> [Counter] -> [Life] -> [New Release].

## 6.10 Duplex section

### 6.10.1 Cleaning of the duplex transport rollers

#### (1) Periodically cleaning parts/cycle

- Duplex transport rollers: Every 60,000 counts (upon each call)

#### (2) Procedure

1. Open the right door.

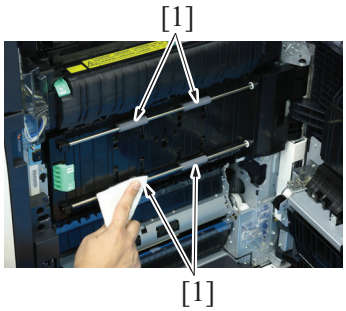


2. Using a cleaning pad with water or alcohol, wipe the duplex transport rollers [1] clean of dirt.

# 7. Periodical maintenance procedure DF-629

**NOTE**

- **The alcohol described in the cleaning procedure of maintenance represents the isopropyl alcohol.**

## 7.1 Take-up section

### 7.1.1 Cleaning of the pick-up roller/feed roller

#### (1) Periodically cleaning parts/cycle

- Pick-up roller: Every 50,000 counts
- Feed roller: Every 50,000 counts

#### (2) Procedure

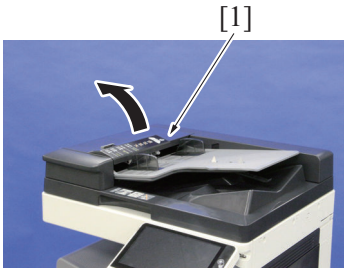


1. Open the left cover [1].

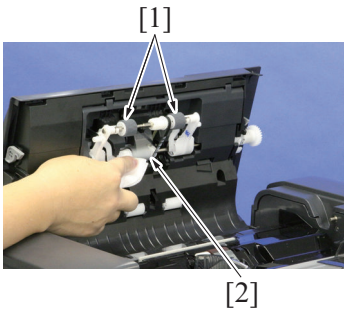


2. Using a cleaning pad with alcohol, wipe the pick-up roller [1] / feed roller [2] clean of dirt.

### 7.1.2 Cleaning of the separation roller

#### (1) Periodically cleaning parts/cycle

- Separation roller: Every 50,000 counts

#### (2) Procedure

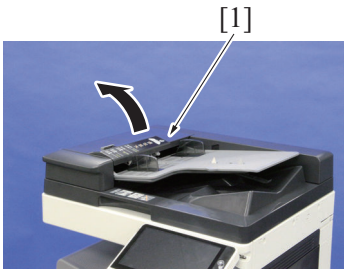


1. Open the left cover [1].

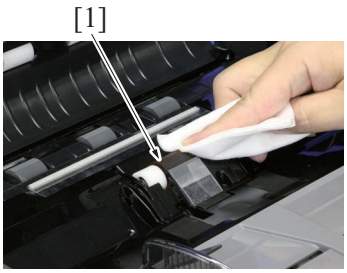


2. Using a cleaning pad with alcohol, wipe the separation roller [1] clean of dirt.

### 7.1.3 Replacing the paper feed assy.

#### (1) Periodically replacing parts/cycle

- Paper feed assy.: Every 200,000 counts

**NOTE**

- **At replacing the rollers, the paper feed assy. (pick-up roller + feed roller) and the separation roller assy. must be replaced at the same time. Otherwise, the pick-up roller, feed roller, and separation roller assy. must be replaced at the same time.**

#### (2) Procedure

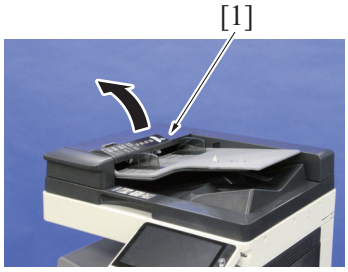


1. Open the left cover [1].

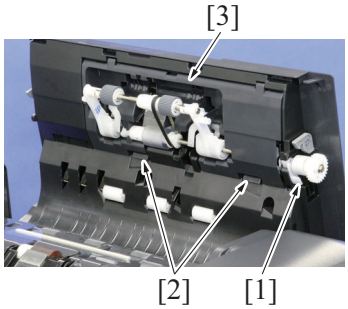


2. Release the lock [1].
3. Release two tabs [2], and remove the paper feed assy. [3].
4. To reinstall, reverse the order of removal.

### 7.1.4 Replacing the pick-up roller/feed roller

#### (1) Periodically replacing parts/cycle

- Pick-up roller: Every 200,000 counts
- Feed roller: Every 200,000 counts

**NOTE**

- **At replacing the rollers, the paper feed assy. (pick-up roller + feed roller) and the separation roller assy. must be replaced at the same time. Otherwise, the pick-up roller, feed roller, and separation roller assy. must be replaced at the same time.**

#### (2) Procedure

1. Remove the paper feed assy..
   F.7.1.3 Replacing the paper feed assy.

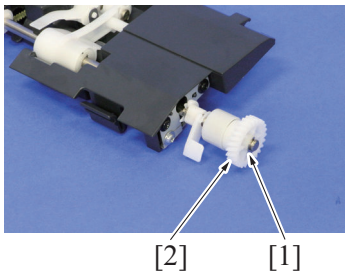


2. Remove the E-ring [1] and the gear assy [2].
   **NOTE**
   - **When reinstalling the gear assy [2], push the gear assy [2] into position while rotating it.**

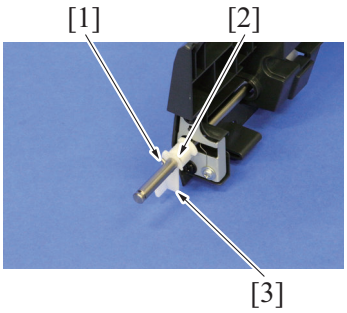


3. Remove the pin [1].
   **NOTE**
   - **Be careful not to lose the pin [1].**
4. Remove the C-clip [2], and remove the lever [3].

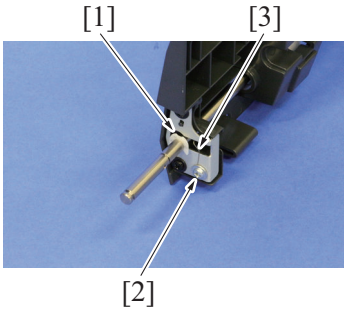


5. Remove the C-clip [1].
6. Remove the screw [2], and remove the spring [3].

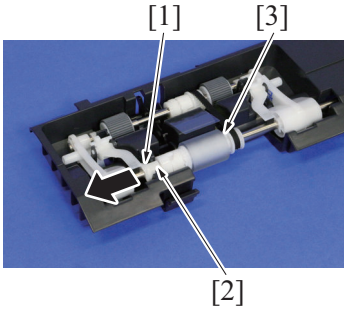


7. Remove the C-clip [1] and slide the bushing [2] in the direction of the arrow.
8. Remove the pick-up roller/feed roller assy [3].

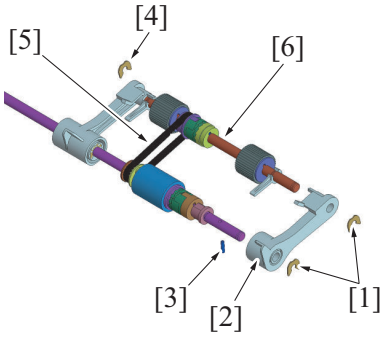


9. Remove two C-rings [1].
10. Remove the arm [2] and the pin [3].
    **NOTE**
    - **Be careful not to lose the pin [3].**
11. Remove the C-ring [4] and the belt [5], and remove the pick-up roller assy [6].

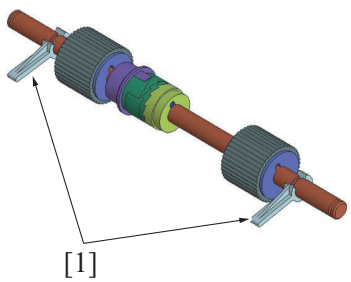


12. Remove two levers [1].

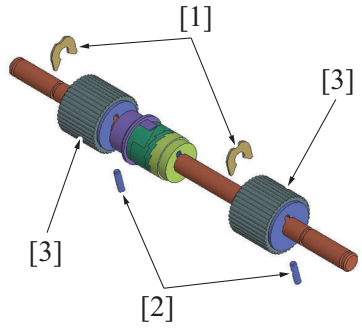


*13.* Remove two C-rings [1] and two pins [2], and remove two pick-up rollers [3].
**NOTE**
- **Be careful not to lose the pin [2].**

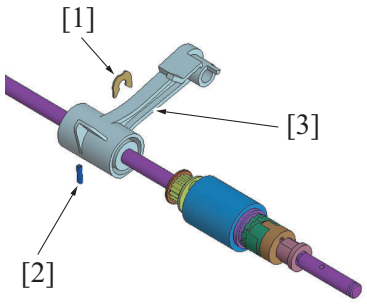


*14.* Remove the C-ring [1] and the pin [2], and remove the arm [3].
**NOTE**
- **Be careful not to lose the pin [2].**

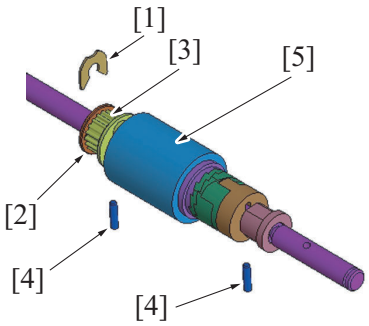


*15.* Remove the C-ring [1], the pulley [2] and the gear [3].
*16.* Remove two pins [4], and remove the feed roller [5].
**NOTE**
- **Be careful not to lose the pin [4].**

*17.* To reinstall, reverse the order of removal.

### 7.1.5 Replacing the separation roller assy

#### (1) Periodically replacing parts/cycle

- Separation roller assy: Every 200,000 counts

**NOTE**
- **At replacing the rollers, the paper feed assy. (pick-up roller + feed roller) and the separation roller assy. must be replaced at the same time. Otherwise, the pick-up roller, feed roller, and separation roller assy. must be replaced at the same time.**

#### (2) Procedure

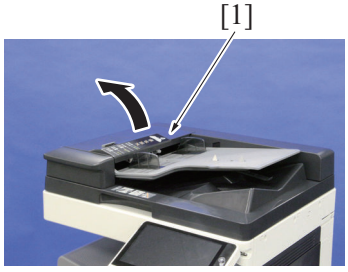


*1.* Open the left cover [1].

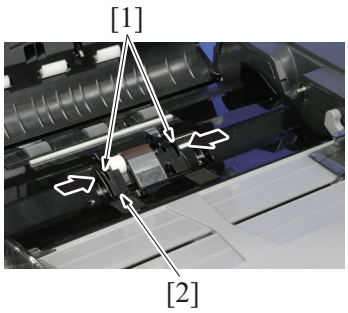


2. Grip both sides [1] of the holder and remove the cover [2].

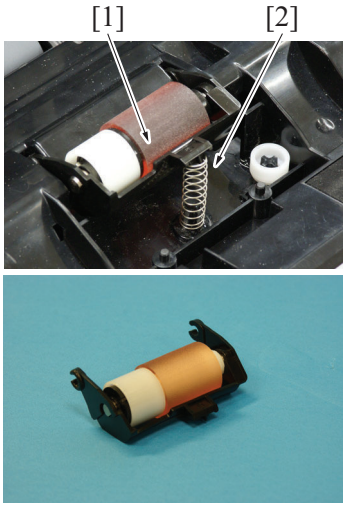


3. Remove the separation roller assy [1].
**NOTE**
- **Do not lose the spring [2] at the lower part of the separation roller assy [1].**

4. To reinstall, reverse the order of removal.

## 7.2 Transport section

### 7.2.1 Cleaning of the miscellaneous rolls

#### (1) Periodically cleaning parts/cycle

- Miscellaneous rolls: Every 50,000 counts

#### (2) Procedure

1. Lift up the document feed tray.

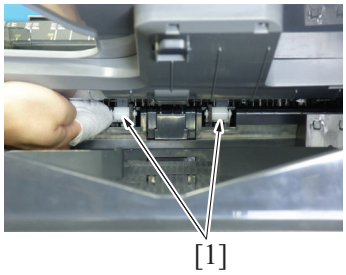


2. Using a cleaning pad dampened with alcohol, wipe the roll [1].

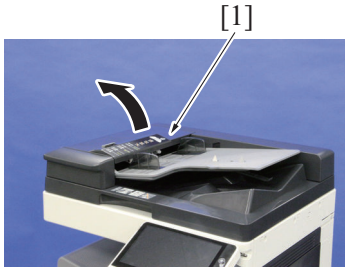


3. Open the left cover [1].

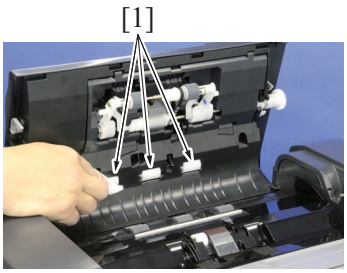


4. Using a cleaning pad dampened with alcohol, wipe the roll [1].

### 7.2.2 Cleaning of the miscellaneous rollers

#### (1) Periodically cleaning parts/cycle

- Miscellaneous rollers: Every 50,000 counts

#### (2) Procedure

1. Lift up the document feed tray.

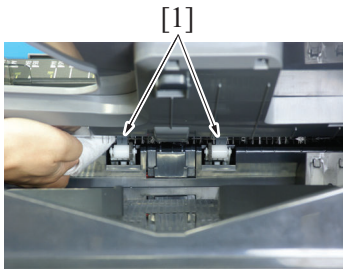


2. Using a cleaning pad dampened with alcohol, wipe the roller [1].

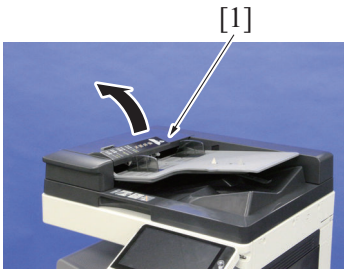


3. Open the left cover [1].

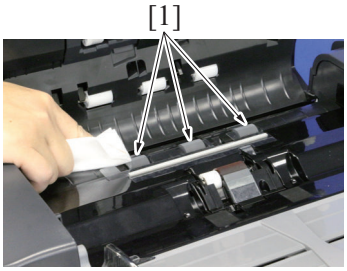


4. Using a cleaning pad dampened with alcohol, wipe the roller [1].

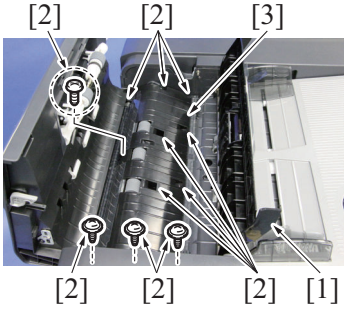


5. Lift up the guide plate DF1 [1].
6. Remove 11 screws [2], and remove the transport guide [3].

**NOTE**

- **Use care when mounting the screw [2] in the dashed circle (one on the left when looking from the front) since it is different from other 10 screws [2].**

7. Using a cleaning pad dampened with alcohol, wipe the roller [1].

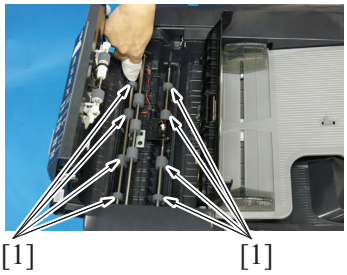


## 7.3 Scanning section

### 7.3.1 Cleaning of the scanning guide

#### (1) Periodically cleaning parts/cycle

- Scanning guide: Every 50,000 counts

#### (2) Procedure

1. Open the reverse automatic document feeder.

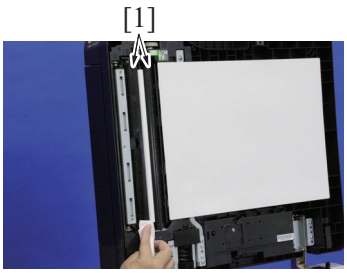


2. Using a cleaning pad dampened with alcohol, wipe the scanning guide [1] clean of dirt.
**NOTE**
- **Be careful not to damage the sheet.**

### 7.3.2 Cleaning of the reflective sensor section

#### (1) Periodically cleaning parts/cycle

- Reflective sensor section: Every 50,000 counts

#### (2) Procedure

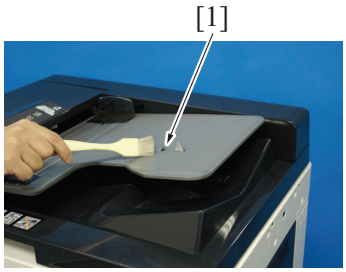


1. Clean the sensor [1] using a brush or other similar tools.

2. Open the reverse automatic document feeder.

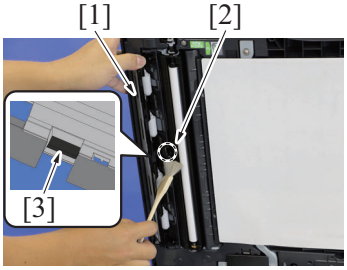


3. Open the document reading front guide [1], and clean the sensor [2] and the reflective part [3] using a brush or other similar tools.

# 8. Periodical maintenance procedure DF-704

**NOTE**

- **The alcohol described in the cleaning procedure of maintenance represents the isopropyl alcohol.**

## 8.1 Take-up section

### 8.1.1 Cleaning of the pick-up roller/feed roller

#### (1) Periodically cleaning parts/cycle

- Pick-up roller: Every 50,000 counts
- Feed roller: Every 50,000 counts

#### (2) Procedure

1. Open the left cover [1].

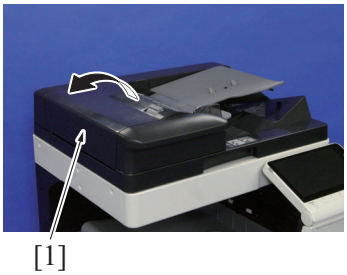


2. Using a cleaning pad with alcohol, wipe the pick-up roller [1] / feed roller [2] clean of dirt.

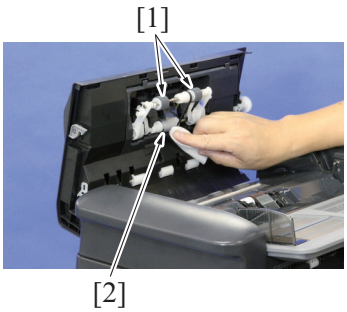


### 8.1.2 Cleaning of the separation roller

#### (1) Periodically cleaning parts/cycle

- Separation roller: Every 50,000 counts

#### (2) Procedure

1. Open the left cover [1].

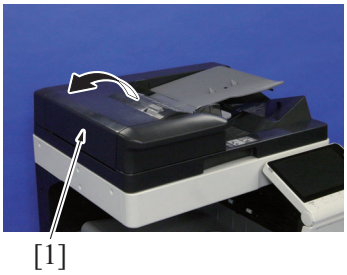


2. Using a cleaning pad with alcohol, wipe the separation roller [1] clean of dirt.

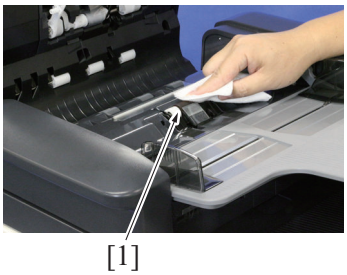

### 8.1.3 Replacing the paper feed assy.

#### (1) Periodically replacing parts/cycle

- Paper feed assy.: Every 200,000 counts

**NOTE**

- **At replacing the rollers, the paper feed assy. (pick-up roller + feed roller) and the separation roller assy. must be replaced at the same time. Otherwise, the pick-up roller, feed roller, and separation roller assy. must be replaced at the same time.**

#### (2) Procedure

1. Open the left cover [1].

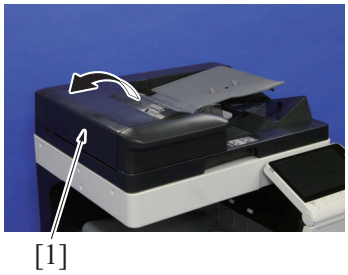


2. Release the lock [1].
3. Release the two tabs [2], and remove the paper feed assy. [3].

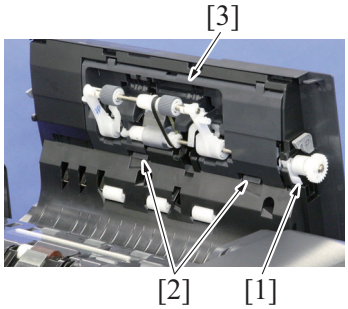


4. To reinstall, reverse the order of removal.

### 8.1.4 Replacing the pick-up roller/feed roller

#### (1) Periodically replacing parts/cycle

- Pick-up roller: Every 200,000 counts
- Feed roller: Every 200,000 counts

**NOTE**

- **At replacing the rollers, the paper feed assy. (pick-up roller + feed roller) and the separation roller assy. must be replaced at the same time. Otherwise, the pick-up roller, feed roller, and separation roller assy. must be replaced at the same time.**

#### (2) Procedure

1. Remove the paper feed assy..
   F.8.1.3 Replacing the paper feed assy.

2. Remove the E-ring [1] and the gear assy [2].
   **NOTE**
   - **When reinstalling the gear assy [2], push the gear assy [2] into position while rotating it.**

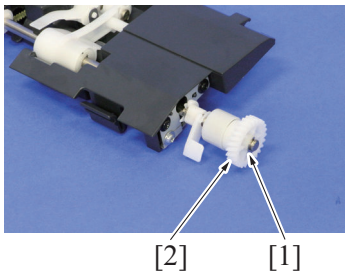

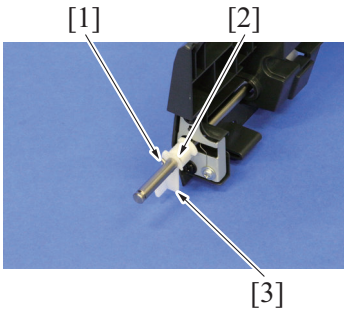


3. Remove the pin [1].
**NOTE**
- **Be careful not to lose the pin [1].**

4. Remove the C-clip [2], and remove the lever [3].

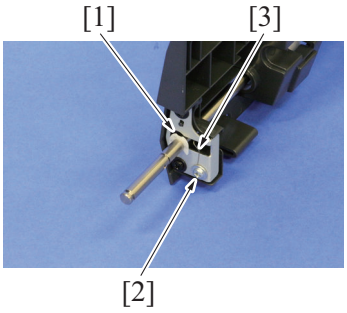


5. Remove the C-clip [1].
6. Remove the screw [2], and remove the spring [3].

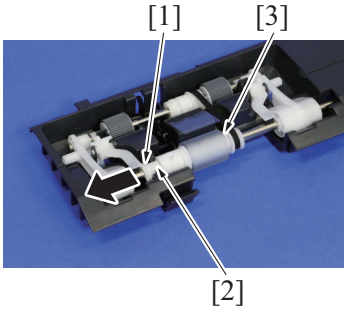


7. Remove the C-clip [1] and slide the bushing [2] in the direction of the arrow.
8. Remove the pick-up roller/feed roller assy [3].

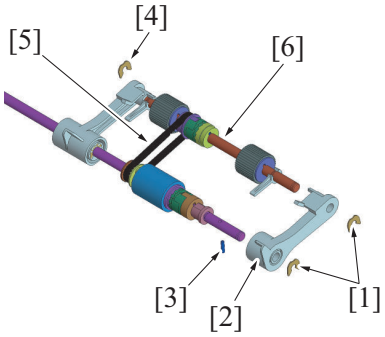


9. Remove two C-rings [1].
10. Remove the arm [2] and the pin [3].
**NOTE**
- **Be careful not to lose the pin [3].**

11. Remove the C-ring [4] and the belt [5], and remove the pick-up roller assy [6].

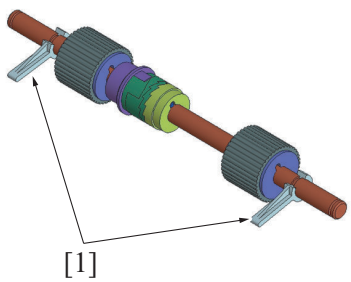


12. Remove two levers [1].

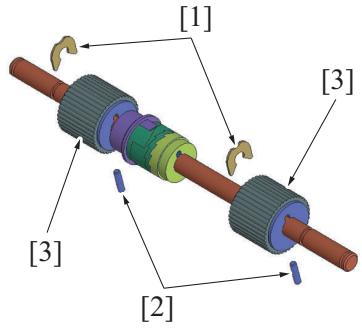


*13.* Remove two C-rings [1] and two pins [2], and remove two pick-up rollers [3].
**NOTE**
- **Be careful not to lose the pin [2].**

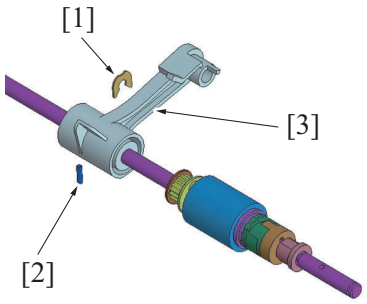


*14.* Remove the C-ring [1] and the pin [2], and remove the arm [3].
**NOTE**
- **Be careful not to lose the pin [2].**

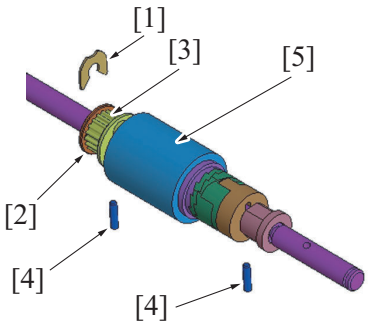


*15.* Remove the C-ring [1], the pulley [2] and the gear [3].
*16.* Remove two pins [4], and remove the feed roller [5].
**NOTE**
- **Be careful not to lose the pin [4].**

*17.* To reinstall, reverse the order of removal.

### 8.1.5 Replacing the separation roller assy

#### (1) Periodically replacing parts/cycle

- Separation roller assy: Every 200,000 counts

**NOTE**
- **At replacing the rollers,the paper feed assy. (pick-up roller + feed roller) and the separation roller assy. must be replaced at the same time. Otherwise, the pick-up roller, feed roller, and separation roller assy. must be replaced at the same time.**

#### (2) Procedure

*1.* Open the left cover [1].

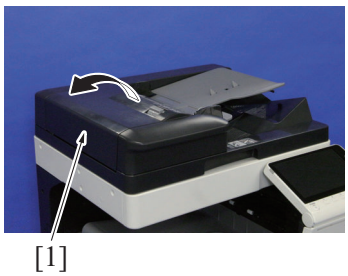

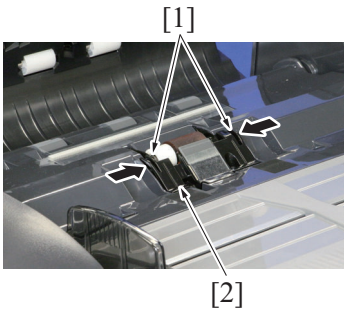


2. Grip both sides [1] of the holder and remove the cover [2].

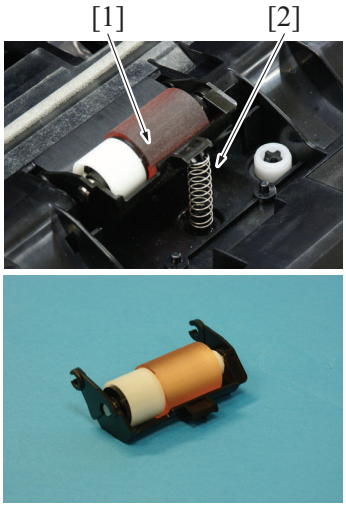


3. Remove the separation roller assy [1].
**NOTE**
- **Do not lose the spring [2] at the lower part of the separation roller assy [1].**

4. To reinstall, reverse the order of removal.

## 8.2 Transport section

### 8.2.1 Cleaning of the miscellaneous rolls

#### (1) Periodically cleaning parts/cycle

- Miscellaneous rolls: Every 50,000 counts

#### (2) Procedure

1. Lift up the document feed tray.

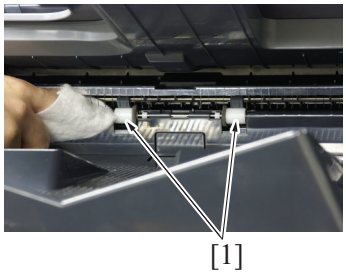


2. Using a cleaning pad dampened with alcohol, wipe the roll [1].

3. Open the left cover [1].

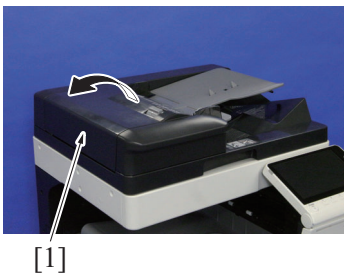

4. Using a cleaning pad dampened with alcohol, wipe the roll [1].

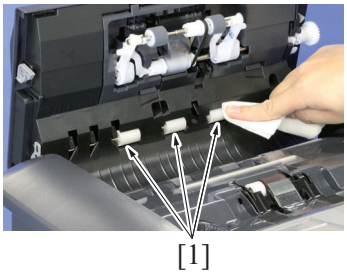


5. Open the opening and closing guide [1].

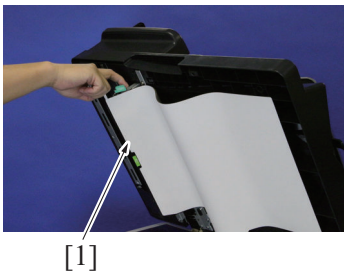


6. Using a cleaning pad dampened with alcohol, wipe the roll [1].

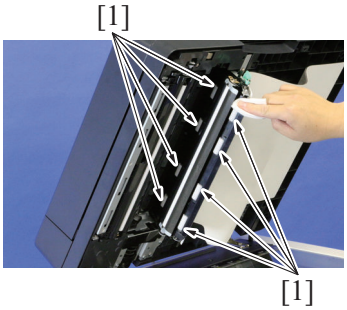


7. Close the opening and closing guide [1].

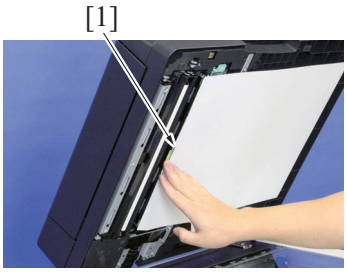


### 8.2.2 Cleaning of the miscellaneous rollers

#### (1) Periodically cleaning parts/cycle

- Miscellaneous rollers: Every 50,000 counts

#### (2) Procedure

1. Lift up the document feed tray.

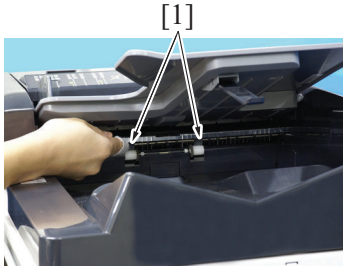


2. Using a cleaning pad dampened with alcohol, wipe the roller [1].

3. Open the left cover [1].

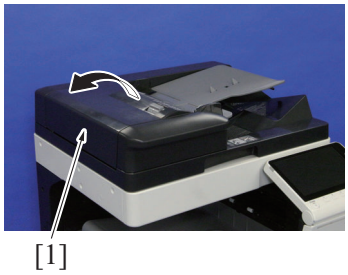


4. Using a cleaning pad dampened with alcohol, wipe the roller [1].

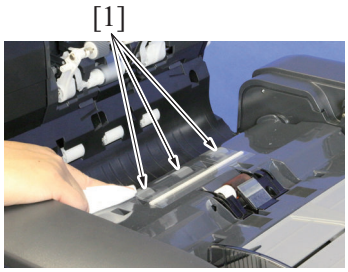


5. Remove the front cover.
   G.6.3.1 Front cover (DF-704)
6. Remove the rear cover.
   G.6.3.2 Rear cover (DF-704)

7. Lift up the document feed tray [1].
8. Remove the claw [2] at the front side, and set the document feed tray [1] off the working area.

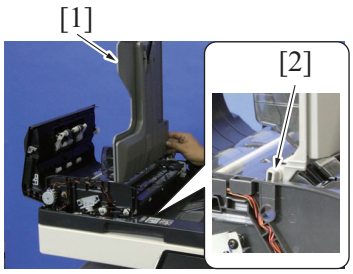


9. Remove 10 screws [1], and remove the transport guide [2].
   **NOTE**
   - **Use care when mounting the screw [1] in the dashed circle (one on the left when looking from the front) since it is different from other nine screws [1].**

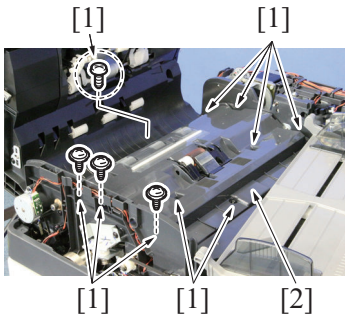


10. Using a cleaning pad dampened with alcohol, wipe the roller [1].

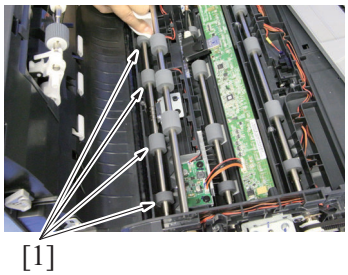

*11.* Open the opening and closing guide [1].

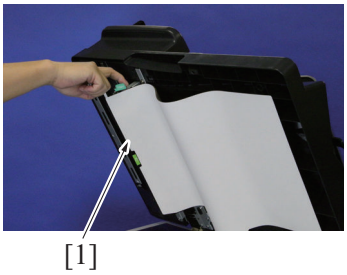


*12.* Using a cleaning pad dampened with alcohol, wipe the roller [1].

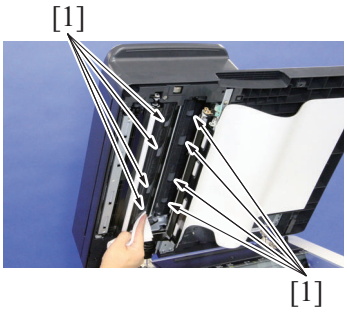


*13.* Close the opening and closing guide [1].

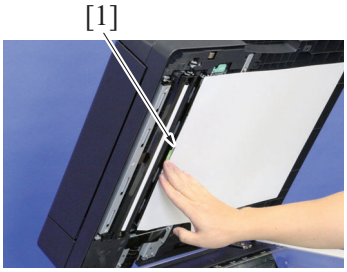


## 8.3 Scanning section

### 8.3.1 Cleaning of the front side scanning guide

#### (1) Periodically cleaning parts/cycle

- Front side scanning guide: Every 50,000 counts

#### (2) Procedure

*1.* Open the dual scan document feeder.

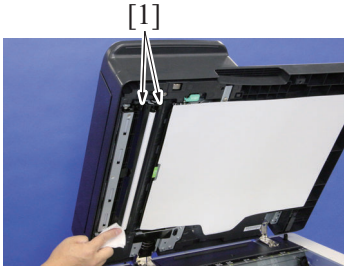


*2.* Using a cleaning pad dampened with alcohol, wipe the front side scanning guide [1] clean of dirt.

**NOTE**

- **Be careful not to damage the sheet.**

### 8.3.2 Cleaning of the reflective sensor section

#### (1) Periodically cleaning parts/cycle

- Reflective sensor section: Every 50,000 counts

### (2) Procedure

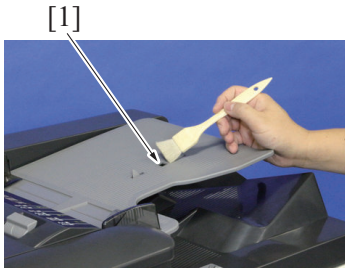


1. Clean the sensor [1] using a brush or other similar tools.

2. Open the dual scan document feeder.

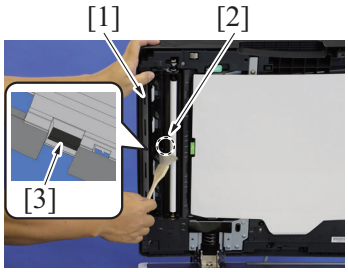


3. Open the document reading front guide [1], and clean the sensor [2] and the reflective part [3] using a brush or other similar tools.

# 9. Periodical maintenance procedure PC-110/PC-210

## 9.1 Paper feed section

### 9.1.1 Replacing the tray 3 feed roller, tray 3 pick-up roller, tray 3 separation roller

#### (1) Periodically replacing parts/cycle

- Tray 3 feed roller: Every 300,000 counts
- Tray 3 pick-up roller: Every 300,000 counts
- Tray 3 separation roller + torque limiter: Every 300,000 counts

**NOTE**

- **Replace the tray 3 feed roller, tray 3 pick-up roller and tray 3 separation roller at the same time.**

#### (2) Procedure

1. Open the right door.
2. Remove the tray 3.
   G.6.4.4 Tray 3, tray 4 (PC-110/PC-210)
3. Remove the tray 4.
   G.6.4.4 Tray 3, tray 4 (PC-110/PC-210)

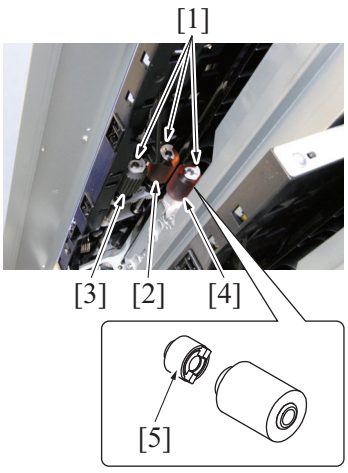


4. Remove the C-clip [1] each, and remove the tray 3 feed roller [2], tray 3 pick-up roller [3] and tray 3 separation roller [4].
   **NOTE**
   - **When replacing the tray 3 separation roller, replace the torque limiter [5] at the same time.**
5. To reinstall, reverse the order of removal.
6. Select [Service Mode] -> [Counter] -> [Life] and clear the count of [3rd.].
   I.5.17.2 Life

### 9.1.2 Replacing the tray 4 feed roller, tray 4 pick-up roller, tray 4 separation roller

#### (1) Periodically replacing parts/cycle

- Tray 4 feed roller: Every 300,000 counts
- Tray 4 pick-up roller: Every 300,000 counts
- Tray 4 separation roller + torque limiter: Every 300,000 counts

**NOTE**

- **Replace the tray 4 feed roller, tray 4 pick-up roller and tray 4 separation roller at the same time.**

#### (2) Procedure

1. Open the right door.
2. Remove the tray 3 and tray 4.
   G.6.4.4 Tray 3, tray 4 (PC-110/PC-210)

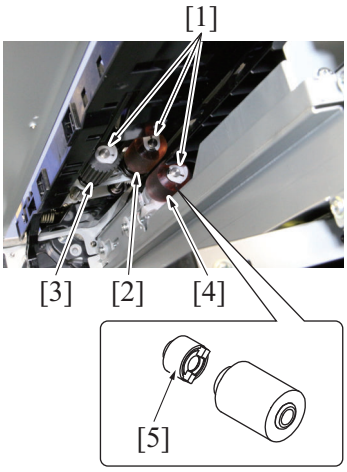


3. Remove the C-clip [1] each, and remove the tray 4 feed roller [2], tray 4 pick-up roller [3] and tray 4 separation roller [4].
   **NOTE**
   - **When replacing the tray 4 separation roller, replace the torque limiter [5] at the same time.**
4. To reinstall, reverse the order of removal.

5. Select [Service Mode] -> [Counter] -> [Life] and clear the count of [4th.].
I.5.17.2 Life

# 10. Periodical maintenance procedure PC-410

## 10.1 Paper feed section

### 10.1.1 Replacing the feed roller, pick-up roller, separation roller

#### (1) Periodically replacing parts/cycle

- Feed roller: Every 300,000 counts
- Pick-up roller: Every 300,000 counts
- Separation roller + torque limiter: Every 300,000 counts

**NOTE**

- **Replace the feed roller, pick-up roller and separation roller at the same time.**

#### (2) Procedure

1. Slide out the paper feed tray.
2. Remove the right door.
   G.6.5.1 Right door (PC-410)

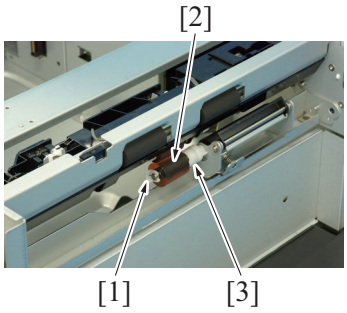


3. Remove the C-clip [1], and remove the separation roller [2].
   **NOTE**
   - **When replacing the separation roller, replace the torque limiter [3] at the same time.**

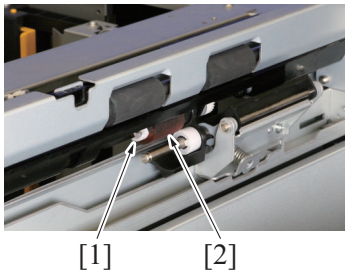


4. Remove the C-clip [1], and remove the feed roller [2].

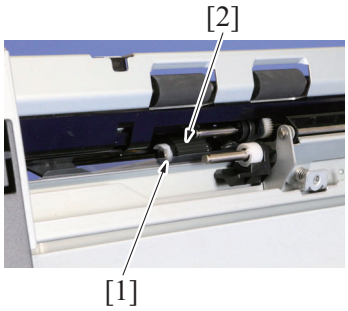


5. Remove the C-clip [1], and remove the pick-up roller [2].

6. To reinstall, reverse the order of removal.
7. Select [Service Mode] -> [Counter] -> [Life] and clear the count of [3rd.].
   I.5.17.2 Life

# 11. Periodical maintenance procedure LU-302

## 11.1 Paper feed section

### 11.1.1 Replacing the pick-up roller

#### (1) Periodically replacing parts/cycle

- Pick-up roller: Every 300,000 counts

#### (2) Procedure

1. Open the upper door.

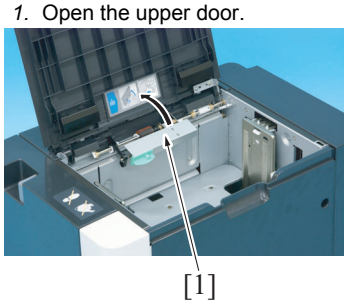


2. Move the feed roller assy [1] up.

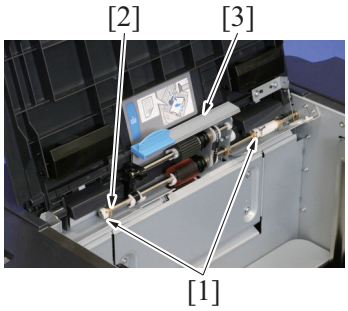


3. Remove two C-clips [1], the bushing [2] and remove the feed roller assy [3].

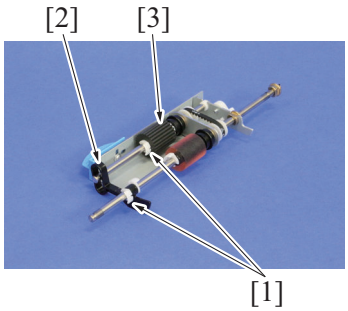


4. Remove two C-clips [1], the actuator [2] and remove the pick-up roller [3].

5. To reinstall, reverse the order of removal.

### 11.1.2 Replacing the feed roller

#### (1) Periodically replacing parts/cycle

- Feed roller: Every 300,000 counts

#### (2) Procedure

1. Open the upper door.

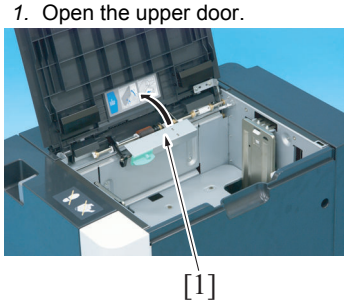


2. Move the feed roller assy [1] up.

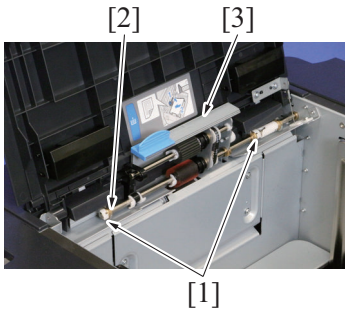


3. Remove two C-clips [1], the bushing [2] and remove the feed roller assy [3].

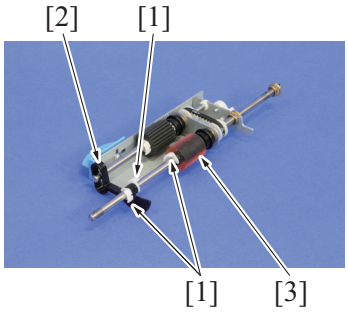


4. Remove three C-clips [1], the actuator [2] and remove the feed roller [3].

5. To reinstall, reverse the order of removal.

### 11.1.3 Replacing the separation roller

#### (1) Periodically replacing parts/cycle

- Separation roller: Every 300,000 counts

#### (2) Procedure

1. Open the upper door.

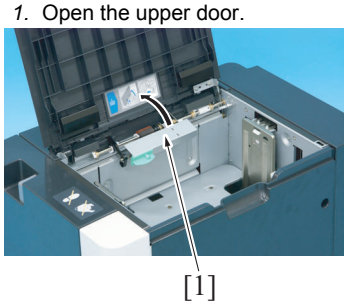


2. Move the feed roller assy [1] up.

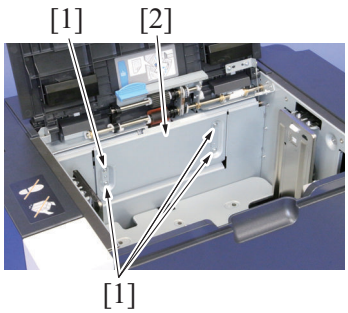


3. Remove four screws [1], and remove the plate [2].

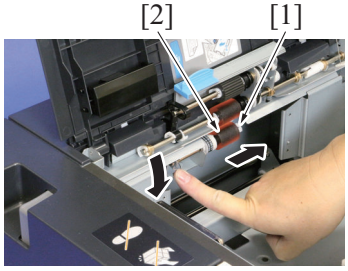


4. Remove the C-clip [1] while pressing the separation roller down to remove the separation roller [2].

5. To reinstall, reverse the order of removal.

# 12. Periodical maintenance procedure FS-534/FS-534SD

**NOTE**

- **The alcohol described in the cleaning procedure of maintenance represents the isopropyl alcohol.**

## 12.1 Paper exit section

### 12.1.1 Cleaning procedure for each rollers/each rolls

#### (1) Periodically cleaning parts/cycle

- Each rollers/Each rolls: Every 300,000 counts

#### (2) Cleaning point

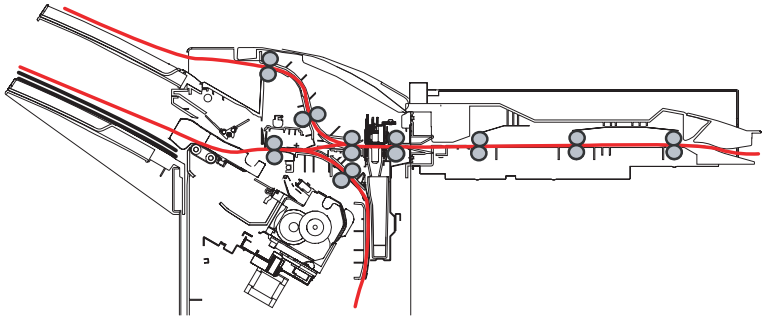

### 12.1.2 Cleaning the paddles

#### (1) Periodically cleaning parts/cycle

- Paddle: Every 300,000 counts

#### (2) Procedure

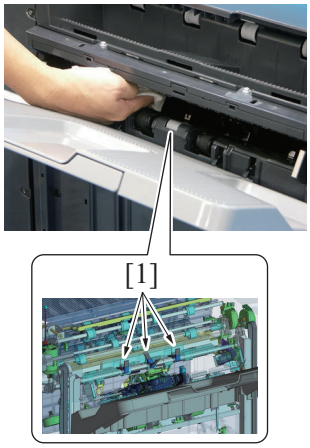


1. Using a cleaning pad dampened with alcohol, wipe the paddle [1].

### 12.1.3 Replacing the paddle units

#### (1) Periodically replacing parts/cycle

- Paddle units: Every 2,000,000 counts

#### (2) Procedure

1. Remove the finisher from the main body.
   G.6.10.6 Finisher (FS-534/FS-534SD)
2. Remove the front door of the finisher.
   G.6.10.2 Front door (FS-534/FS-534SD)
3. Remove the front upper cover of the finisher.
   G.6.10.3 Front upper cover (FS-534/FS-534SD)
4. Remove the rear cover of the finisher.
   G.6.10.1 Rear cover (FS-534/FS-534SD)

5. Remove the paper exit tray [1].

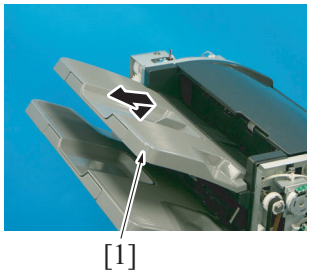


6. Remove two tabs [1], and remove the cover [2].

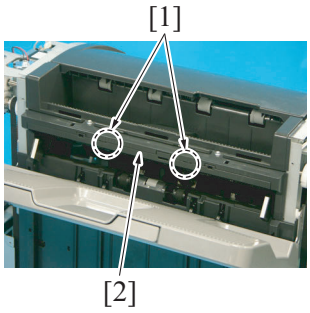


7. Release the tab [1], and remove the main tray upper position detect switch [2].

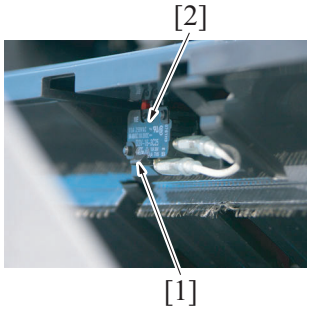


8. Remove four screws [1], and remove the cover [2].

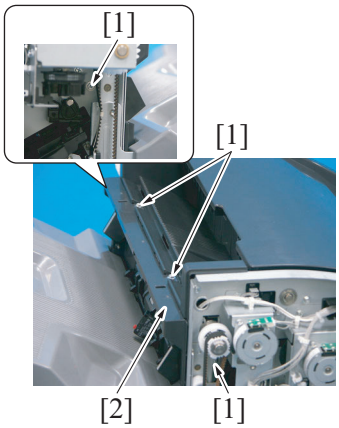

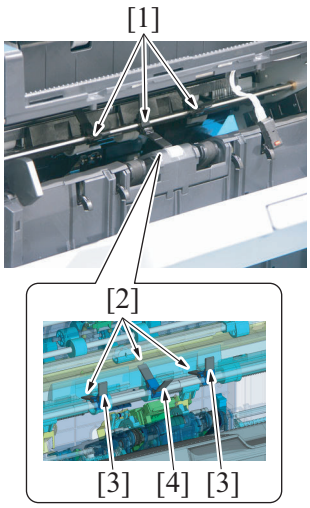


*10.* To reinstall, reverse the order of removal.

### 12.1.4 Cleaning procedure for each rollers/each rolls

#### (1) Periodically cleaning parts/cycle

- Each rollers/Each rolls: Every 300,000 counts

#### (2) Cleaning point

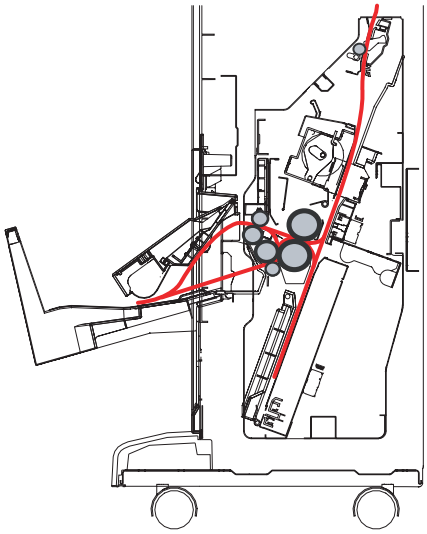

### 12.1.5 Cleaning the upper paddle

#### (1) Periodically cleaning parts/cycle

- Upper paddle: Every 300,000 counts

#### (2) Procedure

*1.* Remove the saddle unit.
G.6.10.10 Saddle unit (FS-534SD)

*2.* Remove the front cover.
G.6.11.1 Front cover (SD-511)

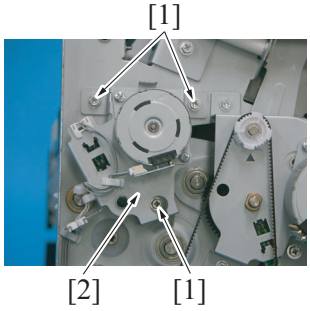


*9.* Remove three paddle units [1].
**NOTE**
- **When reinstalling the paddle units, be careful not to attach them at an incorrect location or in an incorrect orientation. Length: [4] > [2] > [3]**

*3.* Remove three screws [1], and remove the tri-fold guide motor assy [2].

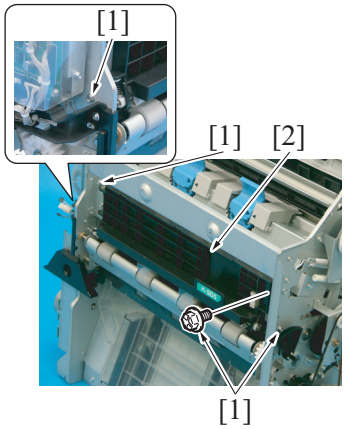


4. Remove four screws [1], and remove the conveyance assy [2].

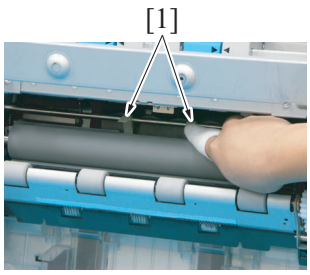


5. Using a cleaning pad dampened with alcohol, wipe the paddle [1].

### 12.1.6 Cleaning the lower paddle

#### (1) Periodically cleaning parts/cycle

- Lower paddle: Every 300,000 counts

#### (2) Procedure

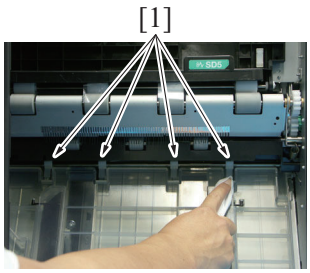


1. Using a cleaning pad dampened with alcohol, wipe the paddle [1].

### 12.1.7 Replacing the upper paddle assy

#### (1) Periodically replacing parts/cycle

- Upper paddle assy: Every 2,000,000 counts

#### (2) Procedure

1. Remove the saddle unit.
   G.6.10.10 Saddle unit (FS-534SD)
2. Remove the front cover.
   G.6.11.1 Front cover (SD-511)

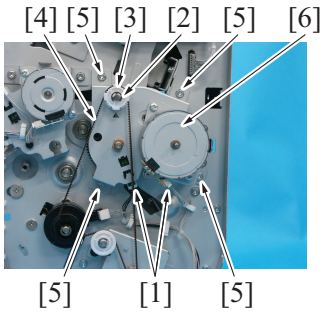


3. Disconnect two connectors [1].
4. Remove the E-ring [2].
5. Remove the gear [3] and the belt [4].
6. Remove four screws [5], and remove the center fold guide motor assy [6].

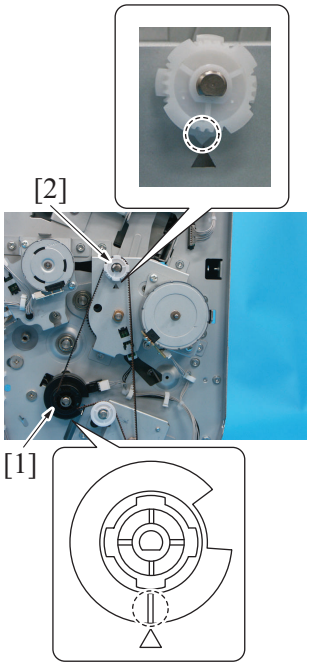


**NOTE**

- **When reinstalling the belt, align the portions of the gear [1] and the gear [2] indicated in the illustration with the triangular marking on the metal plate. Then, install the belt.**

7. Remove the upper paddle assy [1].

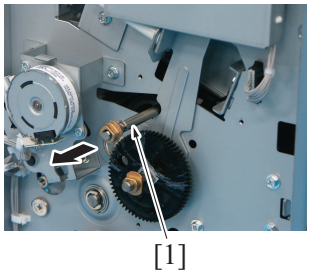


8. Remove the bushing [1].
9. Remove the E-ring [2], and remove the bushing [3].
10. Remove two E-rings [4].
11. Replace the upper paddle assy [5].

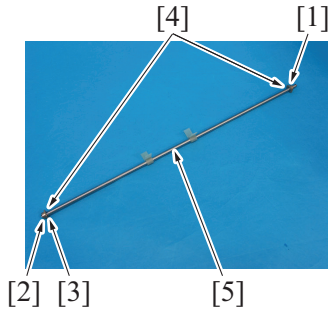


12. To reinstall, reverse the order of removal.

### 12.1.8 Replacing the lower paddle unit

#### (1) Periodically replacing parts/cycle

- Lower paddle unit: Every 2,000,000 counts

**(2) Procedure**

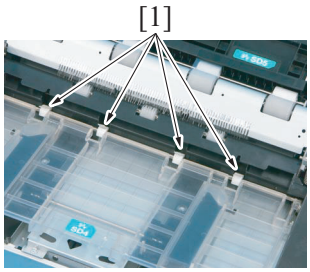


*1.* Remove four lower paddle units [1].

# 13. Periodical maintenance procedure FS-533

**NOTE**
- **The alcohol described in the cleaning procedure of maintenance represents the isopropyl alcohol.**

## 13.1 Paper exit section

### 13.1.1 Cleaning procedure for each parts

#### (1) Periodically cleaning parts/cycle

- Each rollers/Each rolls: Every 300,000 counts

#### (2) Cleaning point

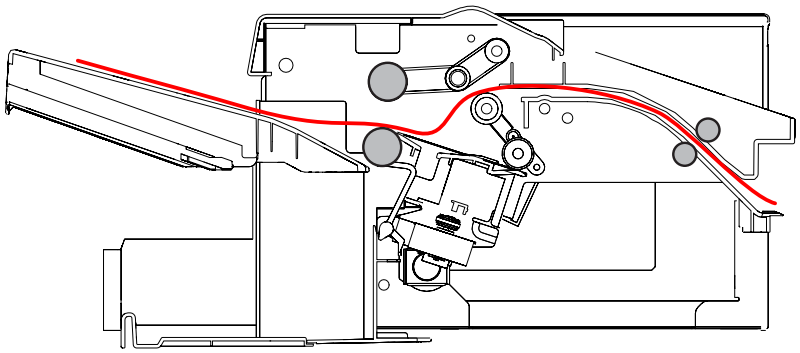

**NOTE**
- **Do not clean the alignment roller F/R.**

### 13.1.2 Cleaning the paper exit paddle

#### (1) Periodically cleaning parts/cycle

- Paper exit paddle: Every 300,000 counts

#### (2) Procedure

1. Using a cleaning pad dampened with alcohol, wipe the paper exit paddle [1].

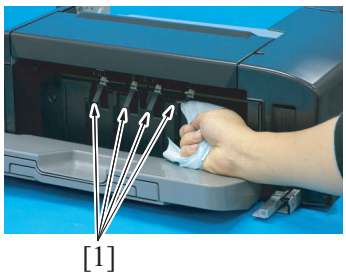


## 13.2 Alignment section

### 13.2.1 Replacing the alignment roller assy F/R

#### (1) Periodically replacing parts/cycle

- Alignment roller assy F/R: Every 1,000,000 counts

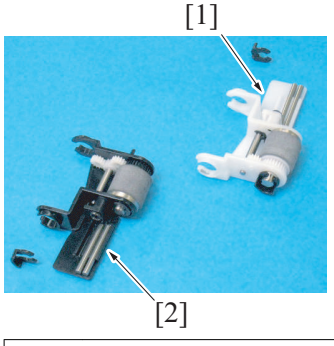


| | | | |
|---|---|---|---|
| [1] | Alignment roller assy R | [2] | Alignment roller assy F |

#### (2) Removal procedure

1. Remove the front cover.

G.6.8.1 Front cover (FS-533)

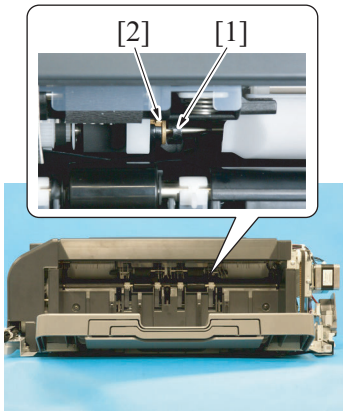


2. Remove the C-clip [1].
3. Move the bushing [2] to the right.

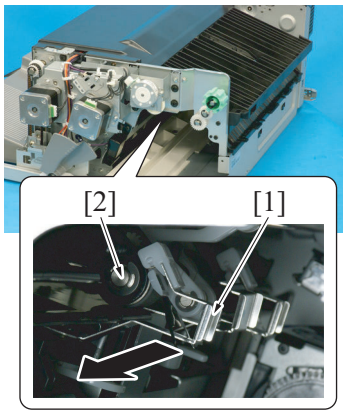


4. Pull the paper stopper [1] and remove the alignment roller assy /F [2].

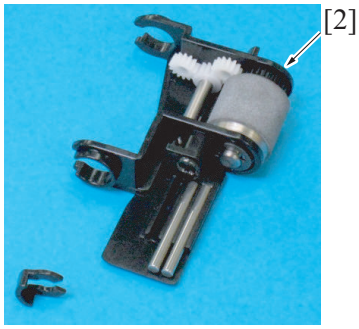


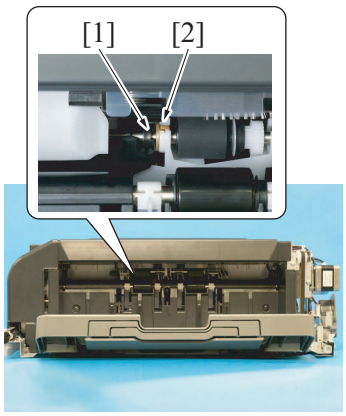


5. Remove the C-clip [1].
6. Move the bushing [2] to the left.

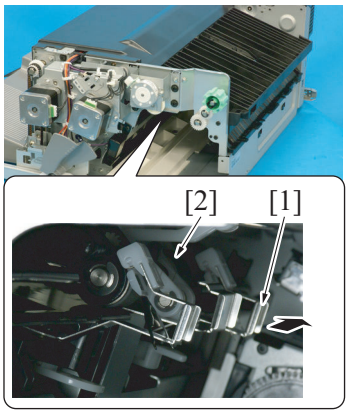


7. Press the paper stopper [1] to the rear and remove the alignment roller assy /R [2].

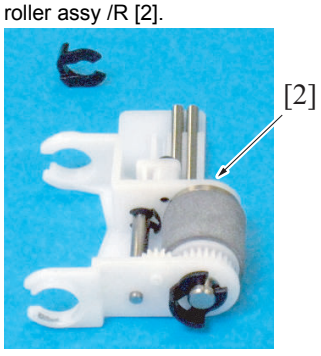


8. Reinstall the above parts following the removal steps in reverse.

# G DISASSEMBLY/REASSEMBLY

## 1. Disassembly/adjustment prohibited items

### 1.1 Paint-locked screws

**NOTE**

- **To prevent loose screws, a screw lock in blue or green series color is applied to the screws.**
- **The screw lock is applied to the screws that may get loose due to the vibrations and loads created by the use of machine or due to the vibrations created during transportation.**
- **If the screw lock coated screws are loosened or removed, be sure to apply a screw lock after the screws are tightened.**

### 1.2 Red-painted screws

**NOTE**

- **The screws which are difficult to be adjusted in the field are painted in red in order to prevent them from being removed by mistake.**
- **Do not remove or loosen any of the red-painted screws in the field. It should also be noted that, when two or more screws are used for a single part, only one representative screw may be marked with the red paint.**

### 1.3 Variable resistors on board

**NOTE**

- **Do not turn the variable resistors on boards for which no adjusting instructions are given in Adjustment/Setting.**

### 1.4 Warnings for disassembly

**⚠WARNING**

- When accessing a hard-to-view or narrow spot, be careful about sharp edges and burrs on the frame and parts.
  They may injure your hands or fingers.
- If it is absolutely necessary to service the machine with the door open or external covers removed, always be attentive to the motion of the internal parts.
  A normally protected part may cause unexpected hazards.
- When removing a part that secures a motor, gear, or other moving part, disassembling a unit, or reinstalling any of such parts and units, be careful about moving parts and use care not to drop any part or unit. During the service procedure, give sufficient support for any heavy unit.
  You may be injured by a falling part or unit.

### 1.5 Warnings / Precautions during setup or transportation

**⚠WARNING**

- Whenever mounting an option on the machine, be attentive to the motion of the other workers performing the task.
  Another worker may be injured by a pinch point between the machine and the option.

# ⚠WARNING

- When mounting an option on the machine, be careful about the clearance between the machine and the option.
  You may be injured with your finger or hand pinched between the machine and the option.

# ⚠CAUTION

- Do not leave the machine unattended during transportation, installation, and/or inspection. If the machine is left unattended, face protrusions toward the wall or take other necessary precautions to prevent.
  A user or other person in the area from stumbling over a protrusion of the machine or being caught by a cable, possibly causing a fall to the floor or other personal injury.

# 2. Units from which removing is prohibited

## 2.1 CCD board

### 2.1.1 Reason for prohibition

- Since the accuracy of the CCD board is guaranteed as a unit, no accuracy is guaranteed if it is disassembled. Therefore, screws that lead to the disassembly of the CCD board must not be removed.

## 2.2 PH unit

### 2.2.1 Reason for prohibition

- The laser runs inside the PH unit. Opening the cover may cause dust to enter and interrupt the laser. Do no remove any screw which may disassemble the PH unit.

## 2.3 Fusing unit

### 2.3.1 Reason for prohibition

- Inner part of the fusing unit and the position of the fusing belt are adjusted prior to shipping. Do not remove any screw which may disassemble the fusing unit.

# 3. Disassembly/assembly warning/caution items

## 3.1 Removal/installing of PWBs

**⚠CAUTION**

- When removing or installing a circuit board or other electrical component, refer to “Handling of PWBs” and follow the corresponding removal or installing procedures.
- The removal procedures given in the following omit the removal of connectors and screws securing the circuit board support or circuit board.
- Where it is absolutely necessary to touch the ICs and other electrical components on the board, be sure to ground your body.

## 3.2 Use a special screw

- To prevent the customers from injury, the special screws are used at following positions of the machine.
- When removing and reinstalling a part or unit at following positions, make sure to use the special screws that is used to secure the part or unit.

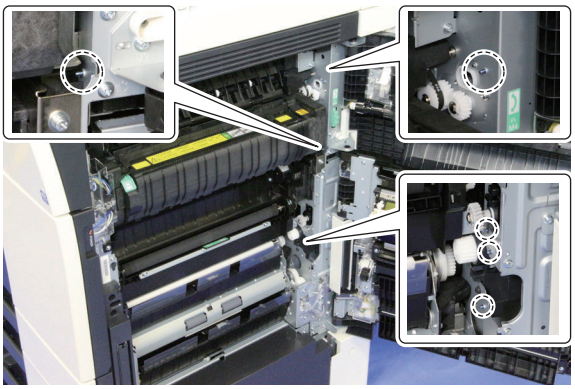

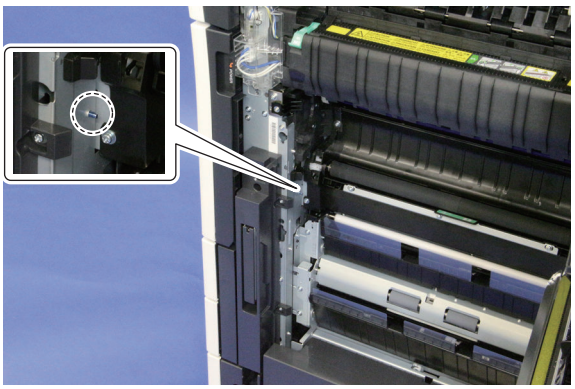

# 4. Notes when transporting the machine

**NOTE**

- **When transporting a machine to reinstall it in another location, attach the following protective materials to the machine in order to prevent the machine from being damaged or spilling out by vibration during transportation.**
- **The protective materials are removed when the machine is set up. However, be sure to keep the protective materials after finishing the set-up.**

## 4.1 Protective materials

### 4.1.1 Protective materials for the photo conductors

Reinstall procedure

1. Open the front door.
2. Remove the waste toner box.
   F.6.6.1 Replacing the waste toner box

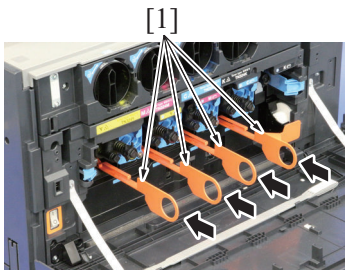


3. Insert the protective materials for the photo conductors [1] in the indicated position and push it as far as it will go.

### 4.1.2 Scanner packing bracket

1. Check that the exposure unit is at the home position.
2. Remove four caps.

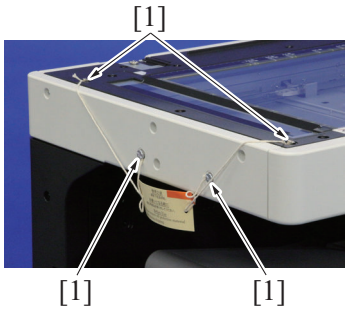


3. Attach the scanner packing brackets [1] to fix the scanner.

# 5. bizhub C368/C308/C258

## 5.1 Disassembly/reassembly parts list

### 5.1.1 Exterior parts

| No. | Part name | Ref. page |
|---|---|---|
| 1 | Scanner rear cover | G.5.2.1 Scanner rear cover |
| 2 | Scanner right cover | G.5.2.2 Scanner right cover |
| 3 | Scanner front cover | G.5.2.3 Scanner front cover |
| 4 | Scanner left cover | G.5.2.4 Scanner left cover |
| 5 | Scanner upper rear cover | G.5.2.5 Scanner upper rear cover |
| 6 | Control panel left cover/1 | G.5.2.6 Control panel left cover/1 |
| 7 | Control panel left cover/2 | G.5.2.7 Control panel left cover/2 |
| 8 | Control panel right cover | G.5.2.8 Control panel right cover |
| 9 | Control panel upper cover | G.5.2.9 Control panel upper cover |
| 10 | Control panel front cover | G.5.2.10 Control panel front cover |
| 11 | Control panel unit | G.5.2.11 Control panel unit |
| 12 | Original glass | G.5.2.12 Original glass |
| 13 | Front door | G.5.2.13 Front door |
| 14 | Front lower cover | G.5.2.14 Front lower cover |
| 15 | Front cover | G.5.2.15 Front cover |
| 16 | Left cover | G.5.2.16 Left cover |
| 17 | Exit tray | G.5.2.17 Exit tray |
| 18 | Rear right cover | G.5.2.18 Rear right cover |
| 19 | Upper right cover | G.5.2.19 Upper right cover |
| 20 | Lower rear cover | G.5.2.20 Lower rear cover |
| 21 | Protective sheet | G.5.2.21 Protective sheet |
| 22 | Upper rear cover | G.5.2.22 Upper rear cover |
| 23 | Tray 1 | G.5.2.23 Tray 1 |
| 24 | Tray 2 | G.5.2.24 Tray 2 |

### 5.1.2 Units

| No. | Part name | Ref. page |
|---|---|---|
| 1 | LED exposure unit | G.5.3.1 LED exposure unit |
| 2 | Paper feed unit | G.5.3.2 Paper feed unit |
| 3 | PH unit | G.5.3.3 PH unit |
| 4 | Sub hopper unit | G.5.3.4 Sub hopper unit |
| 5 | Right door unit | G.5.3.5 Right door unit |
| 6 | Manual bypass tray unit | G.5.3.6 Manual bypass tray unit |
| 7 | Regist unit | G.5.3.7 Regist unit |
| 8 | Hard disk (A) | G.5.3.8 Hard disk (A) |
| 9 | How to open the PWB box | G.5.3.9 How to open the PWB box |
| 10 | Main drive unit | G.5.3.10 Main drive unit |
| 11 | Transport unit | G.5.3.11 Transport unit |
| 12 | Fusing drive unit | G.5.3.12 Fusing drive unit |
| 13 | Hopper drive unit | G.5.3.13 Hopper drive unit |

### 5.1.3 Boards

| No. | Part name | Ref. page |
|---|---|---|
| 1 | CCD board (CCDB) | G.5.4.1 CCD board (CCDB) |
| 2 | Tray 1 CD paper size board (CDPSB/1), tray 2 CD paper size board (CDPSB/2) | G.5.4.2 Tray 1 CD paper size board (CDPSB/1), tray 2 CD paper size board (CDPSB/2) |
| 3 | DC power supply (DCPU) | G.5.4.3 DC power supply (DCPU) |
| 4 | EEPROM/1, EEPROM/2 | G.5.4.4 EEPROM/1, EEPROM/2 |
| 5 | eMMC board (eMMC) | G.5.4.5 eMMC board (eMMC) |
| 6 | Tray 1 FD paper size board (FDPSB/1), tray 2 FD paper size board (FDPSB/2) | G.5.4.6 Tray 1 FD paper size board (FDPSB/1), tray 2 FD paper size board (FDPSB/2) |
| 7 | Front side board (FRB) | G.5.4.7 Front side board (FRB) |
| 8 | High voltage unit (HV) | G.5.4.8 High voltage unit (HV) |
| 9 | Machine condition monitor board (MCMB) | G.5.4.9 Machine condition monitor board (MCMB) |

| No. | Part name | Ref. page |
|---|---|---|
| 10 | MFP board (MFPB) | G.5.4.10 MFP board (MFPB) |
| 11 | Tray 1 empty indicator board (PEIB/1), tray 2 empty indicator board (PEIB/2) | G.5.4.11 Tray 1 empty indicator board (PEIB/1), tray 2 empty indicator board (PEIB/2) |
| 12 | PH relay board (PHRYB) | G.5.4.12 PH relay board (PHRYB) |
| 13 | Scanner drive board (SCDB) | G.5.4.13 Scanner drive board (SCDB) |

### 5.1.4 Motors

| No. | Part name | Ref. page |
|---|---|---|
| 1 | Transport motor (M1) | G.5.5.1 Transport motor (M1) |
| 2 | PC motor (M2) | G.5.5.2 PC motor (M2) |
| 3 | Fusing motor (M3) | G.5.5.3 Fusing motor (M3) |
| 4 | Reverse motor (M4) | G.5.5.4 Reverse motor (M4) |
| 5 | ADU transport motor (M5) | G.5.5.5 ADU transport motor (M5) |
| 6 | Toner supply motor/K (M6) | G.5.5.6 Toner supply motor/K (M6) |
| 7 | Toner supply motor/C (M7) | G.5.5.7 Toner supply motor/C (M7) |
| 8 | Toner supply motor/M (M8) | G.5.5.8 Toner supply motor/M (M8) |
| 9 | Toner supply motor/Y (M9) | G.5.5.9 Toner supply motor/Y (M9) |
| 10 | Toner cartridge motor/Y,M,C (M10) | G.5.5.10 Toner cartridge motor/Y,M,C (M10) |
| 11 | Fusing pressure motor (M11) | G.5.5.11 Fusing pressure motor (M11) |
| 12 | Tray 1 lift-up motor (M12) | G.5.5.12 Tray 1 lift-up motor (M12) |
| 13 | Tray 2 lift-up motor (M13) | G.5.5.13 Tray 2 lift-up motor (M13) |
| 14 | Developing motor (M21) | G.5.5.14 Developing motor (M21) |
| 15 | Toner cartridge motor/K (M25) | G.5.5.15 Toner cartridge motor/K (M25) |
| 16 | Scanner motor (M201) | G.5.5.16 Scanner motor (M201) |

### 5.1.5 Clutches

| No. | Part name | Ref. page |
|---|---|---|
| 1 | Tray 2 paper feed clutch (CL1) | G.5.6.1 Tray 2 paper feed clutch (CL1) |
| 2 | Tray 2 vertical transport clutch (CL2) | G.5.6.2 Tray 2 vertical transport clutch (CL2) |
| 3 | Tray 1 paper feed clutch (CL3) | G.5.6.3 Tray 1 paper feed clutch (CL3) |
| 4 | Registration clutch (CL4) | G.5.6.4 Registration clutch (CL4) |
| 5 | 1st transfer pressure clutch (CL5) | G.5.6.5 1st transfer pressure clutch (CL5) |
| 6 | ADU transport clutch (CL6) | G.5.6.6 ADU transport clutch (CL6) |
| 7 | Bypass paper feed clutch (CL7) | G.5.6.7 Bypass paper feed clutch (CL7) |
| 8 | Paper exit clutch (CL8) | G.5.6.8 Paper exit clutch (CL8) |

### 5.1.6 Fan

| No. | Part name | Ref. page |
|---|---|---|
| 1 | Power supply cooling fan (FM1) | G.5.7.1 Power supply cooling fan (FM1) |
| 2 | Transfer belt cleaner cooling fan (FM2) | G.5.7.2 Transfer belt cleaner cooling fan (FM2) |
| 3 | Machine rear side cooling fan (FM3) | G.5.7.3 Machine rear side cooling fan (FM3) |
| 4 | Toner cartridge cooling fan (FM4) | G.5.7.4 Toner cartridge cooling fan (FM4) |
| 5 | Paper cooling fan (FM8) | G.5.7.5 Paper cooling fan (FM8) |

### 5.1.7 etc.

| No. | Part name | Ref. page |
|---|---|---|
| 1 | Bypass pick-up solenoid (SD1) | G.5.8.1 Bypass pick-up solenoid (SD1) |
| 2 | IDC sensor shutter solenoid (SD2) | G.5.8.2 IDC sensor shutter solenoid (SD2) |
| 3 | Gate switch solenoid (SD3) | G.5.8.3 Gate switch solenoid (SD3) |
| 4 | Developing solenoid (SD4) | G.5.8.4 Developing solenoid (SD4) |
| 5 | FAX speaker (SP1) | G.5.8.5 FAX speaker (SP1) |
| 6 | Bypass CD paper size VR (VR1) | G.5.8.6 Bypass CD paper size VR (VR1) |
| 7 | UFP filter/ Deodorant filter | G.5.8.7 UFP filter/ Deodorant filter |

## 5.2 Disassembly/reassembly procedure (Exterior parts)

### 5.2.1 Scanner rear cover

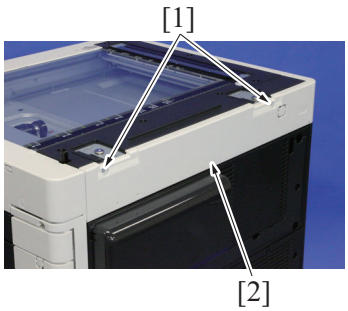


1. Remove two screws [1], and remove the scanner rear cover [2].
2. To reinstall, reverse the order of removal.

### 5.2.2 Scanner right cover

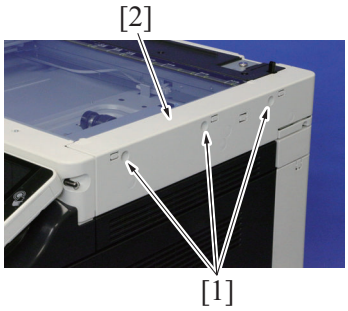


1. Remove three screws [1], and remove the scanner right cover [2].
2. To reinstall, reverse the order of removal.

### 5.2.3 Scanner front cover

1. Remove the scanner left cover.
   G.5.2.4 Scanner left cover
2. Remove the control panel left cover/1.
   G.5.2.6 Control panel left cover/1
3. Remove the control panel right cover.
   G.5.2.8 Control panel right cover
4. Remove the control panel upper cover.
   G.5.2.9 Control panel upper cover

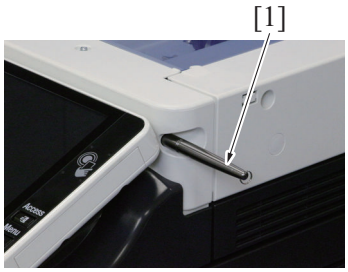


5. Remove the stylus pen [1].

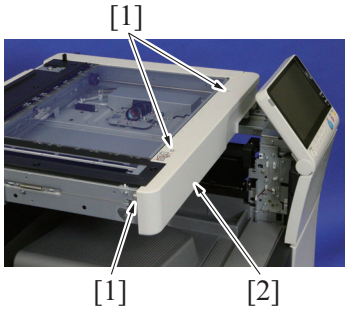


6. Remove three screws [1], and remove the scanner front cover [2].
7. To reinstall, reverse the order of removal.

### 5.2.4 Scanner left cover

1. Remove four screws [1], and remove the scanner left cover [2].

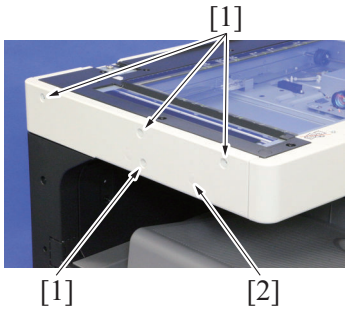


2. To reinstall, reverse the order of removal.

### 5.2.5 Scanner upper rear cover

1. Remove the scanner rear cover.
   G.5.2.1 Scanner rear cover
2. Remove four screws [1], and remove the scanner upper rear cover [2].

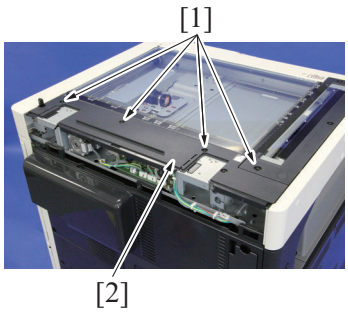


3. To reinstall, reverse the order of removal.

### 5.2.6 Control panel left cover/1

1. Remove two screws [1], and remove the control panel left cover/1 [2].

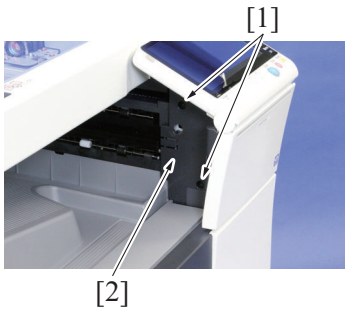


2. To reinstall, reverse the order of removal.

### 5.2.7 Control panel left cover/2

1. Remove the control panel right cover.
   G.5.2.8 Control panel right cover
2. Remove the control panel front cover.
   G.5.2.10 Control panel front cover
3. Remove four screws [1], and remove the control panel left cover/2 [2].

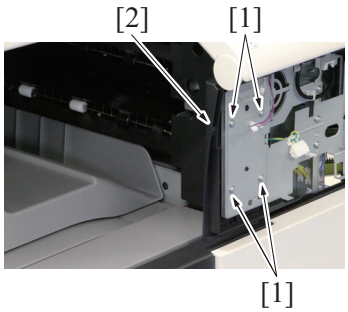


4. To reinstall, reverse the order of removal.

### 5.2.8 Control panel right cover

1. Open the right door.

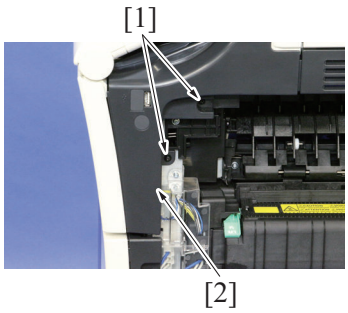


2. Remove two screws [1], and remove the control panel right cover [2].

3. To reinstall, reverse the order of removal.

### 5.2.9 Control panel upper cover

1. Remove the control panel left cover/1.
G.5.2.6 Control panel left cover/1
2. Remove the control panel right cover.
G.5.2.8 Control panel right cover

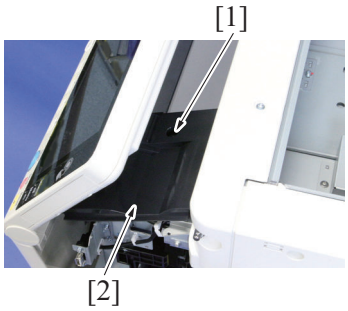


3. Remove the screw [1], and remove the control panel upper cover [2].

4. To reinstall, reverse the order of removal.

### 5.2.10 Control panel front cover

1. Remove the control panel right cover.
G.5.2.8 Control panel right cover

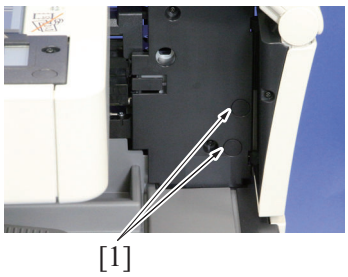


2. Remove two caps [1].

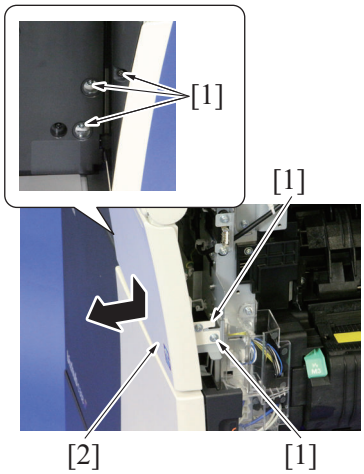


3. Remove five screws [1] from the control panel front cover [2] and remove the cover by releasing the tabs.

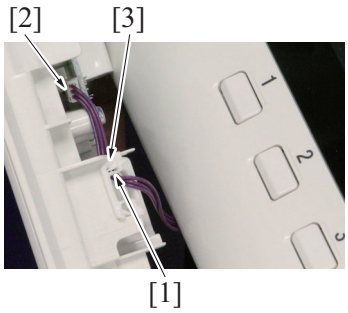


4. Remove the harness from the wire saddle [1].
5. Disconnect the connector [2], and remove the control panel front cover assy [3].

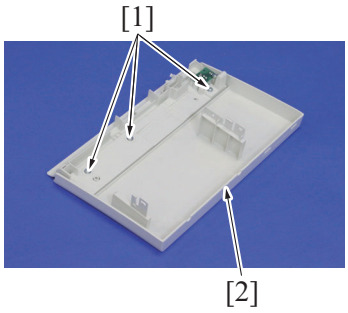


6. Remove three screws [1], and remove the control panel front cover [2].

7. To reinstall, reverse the order of removal.

### 5.2.11 Control panel unit

1. Remove the control panel left cover/1.
   G.5.2.6 Control panel left cover/1
2. Remove the control panel right cover.
   G.5.2.8 Control panel right cover
3. Remove the control panel upper cover.
   G.5.2.9 Control panel upper cover
4. Remove the control panel front cover.
   G.5.2.10 Control panel front cover
5. Remove the control panel left cover/2.
   G.5.2.7 Control panel left cover/2

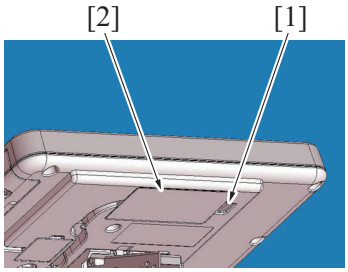


6. Unhook the claw [1], and remove the connector cover [2].

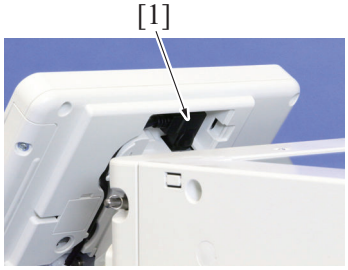


7. Disconnect the connector [1].

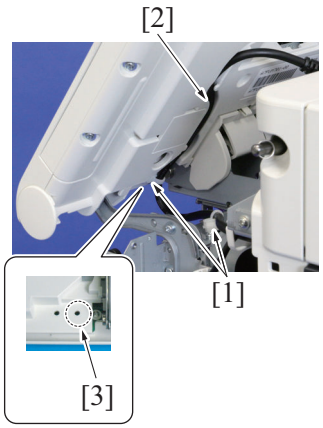


*8.* Remove two cable ties [1] from the control panel.
*9.* Remove the cable from the cable guide [2].
**NOTE**
- **At installation of the control panel unit, insert the cable tie [1] to the hole [3] shown in the illustration.**

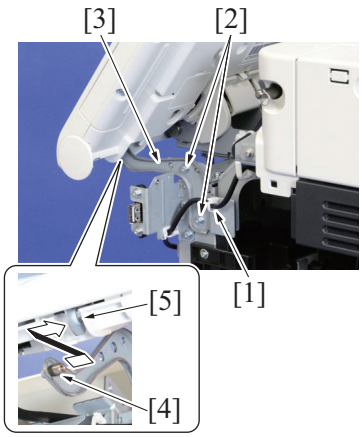


*10.* Remove the harness from the wire saddle [1].
*11.* Remove two screws [2], and remove the metal plate [3].
**NOTE**
- **When installing the control panel, install the shaft [4] into the hole [5] in the figure.**

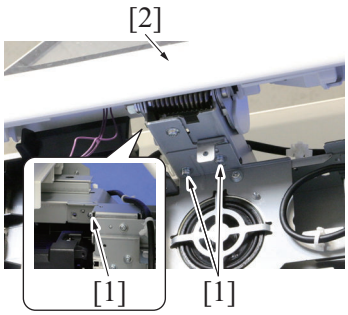


*12.* Remove three screws [1], and remove the control panel unit [2].

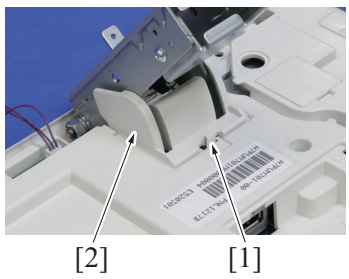


*13.* Unhook the claw [1], and remove the hinge cover [2].

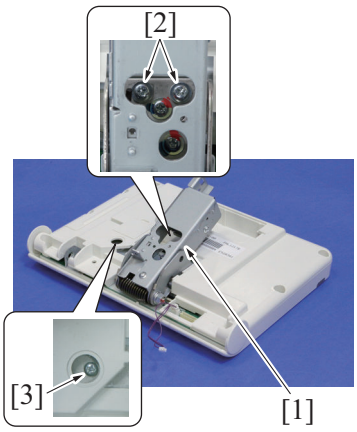


14. Tilt down the hinge [1], and remove two screws [2].
15. Remove the screw [3], and remove the hinge [1].

16. To reinstall, reverse the order of removal.
17. Carry out the touch panel calibration.
G.5.2.11.(1) Touch panel calibration

#### (1) Touch panel calibration

- After replacing the control panel unit, you must perform the touch panel calibration.
Perform one of the calibration procedures described below.

##### (a) Panel Calibration by using USB memory

1. Connect the USB memory containing the MFP firmware data to the service port.
For information on how to store the firmware data into a USB memory, refer to "J.2. USB memory".
2. While pressing the 'Reset' key, turn the main power switch ON.
3. As the calibration screen appears, press the Start key, perform calibration and wait for a while.
4. Confirm that the completion message. Touch [Close].
5. Turn OFF the main power switch, and remove the USB memory.

**NOTE**

- **Once the panel calibration has been completed, panel screen transit to the firmware writing mode and start to update automatically after 30 seconds.**

##### (b) Panel Calibration by manual operation

1. Press [Menu] -> [Counter] -> [Display Keypad].
2. Press Stop -> Clear -> 1 -> 1 -> 6 -> 6 -> Start key, then calibration starts.
3. After 30 seconds, turn OFF the main power switch.

### 5.2.12 Original glass

1. Remove the scanner right cover.
G.5.2.2 Scanner right cover

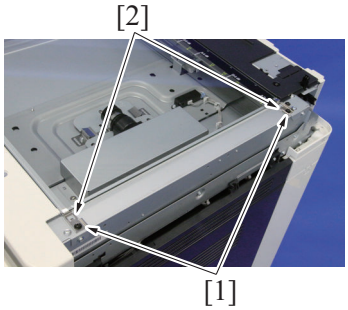


2. Remove the screw [1] each, and remove two original glass fixing brackets [2].

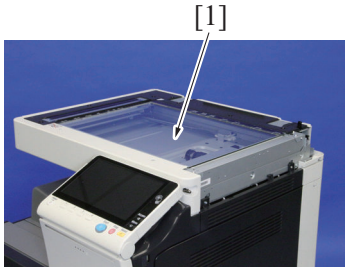


3. Remove the original glass [1].

4. To reinstall, reverse the order of removal.
5. Carry out the [Service Mode] -> [Machine] -> [Scan Area] -> [Scanner Image Side Edge].

6. Carry out the [Service Mode] -> [Machine] -> [Scan Area] -> [Image Position: Leading Edge].

### 5.2.13 Front door

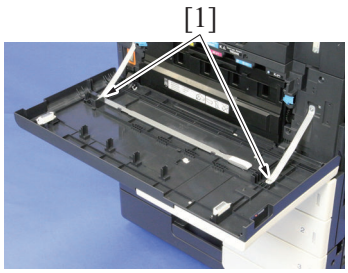


1. Open the front door and remove two screws [1]

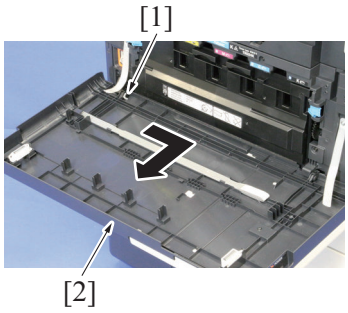


2. Remove the C-clip [1], and remove the front door [2].

3. To reinstall, reverse the order of removal.

### 5.2.14 Front lower cover

1. Remove the waste toner box.
   F.6.6.1 Replacing the waste toner box

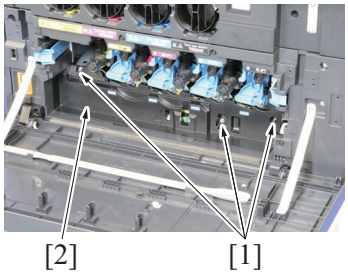


2. Remove three screws [1], and remove the lower front cover [2].

3. To reinstall, reverse the order of removal.

### 5.2.15 Front cover

1. Remove the front door.
   G.5.2.13 Front door
2. Remove the waste toner box.
   F.6.6.1 Replacing the waste toner box
3. Remove the front lower cover.
   G.5.2.14 Front lower cover

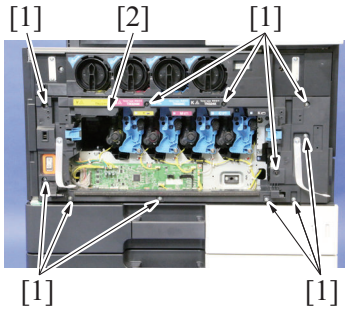


4. Remove 11 screws [1], and remove the front cover [2].

5. To reinstall, reverse the order of removal.

### 5.2.16 Left cover

1. Open the front door.

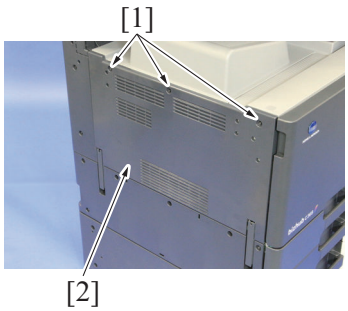


2. Remove three screws [1], and remove the left cover [2].
3. To reinstall, reverse the order of removal.

### 5.2.17 Exit tray

1. Open the front door.
2. Remove the left cover.
   G.5.2.16 Left cover

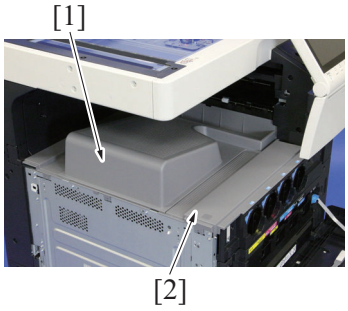


3. Remove the exit tray/1 [1].
4. Remove the exit tray/2 [2].
5. To reinstall, reverse the order of removal.

### 5.2.18 Rear right cover

1. Open the right rear cover.

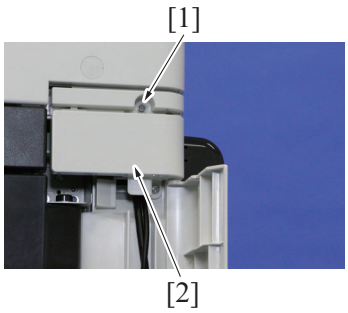


2. Remove the screw [1], and open the upper right rear cover [2].

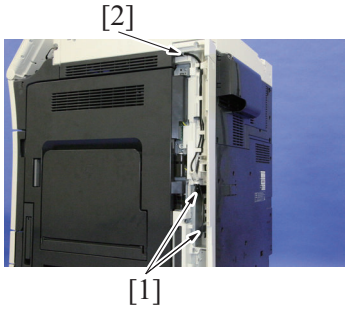


3. Disconnect two connectors [1], and remove the harness from the wire saddle [2] and the harness guide.

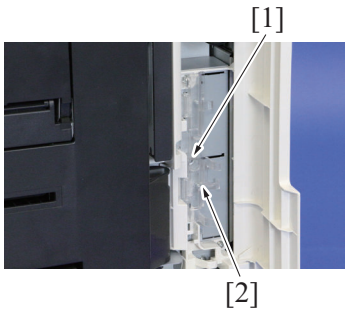


4. Remove the screw [1], and remove the connector cover [2].

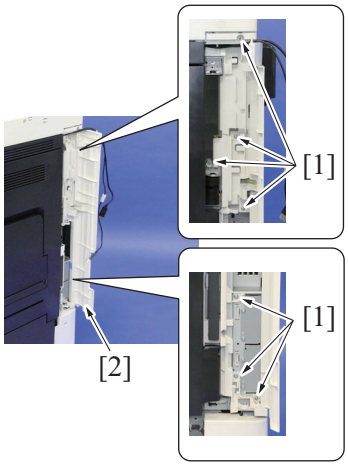


5. Remove seven screws [1], and remove the right rear cover [2] as clearing the harness.

6. To reinstall, reverse the order of removal.

### 5.2.19 Upper right cover

1. Remove the scanner right cover.
G.5.2.2 Scanner right cover

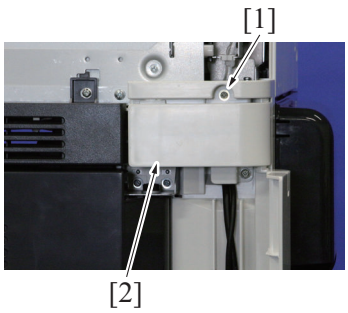


2. Remove the screw [1], and open the upper right rear cover [2].

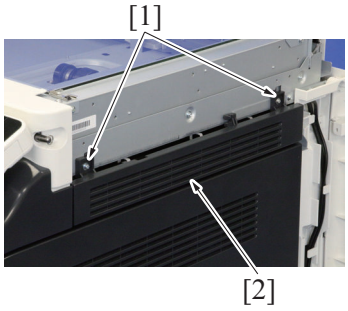


3. Remove two screws [1], and remove the upper right cover [2].

4. To reinstall, reverse the order of removal.

### 5.2.20 Lower rear cover

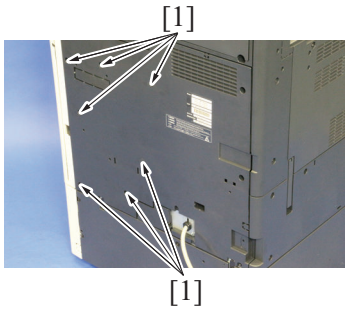


1. Remove seven caps [1].

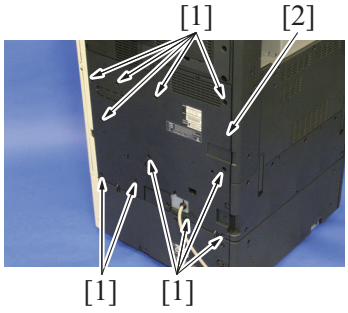


2. Remove 11 screws [1], and remove the lower rear cover [2].

3. To reinstall, reverse the order of removal.

### 5.2.21 Protective sheet

1. Remove the lower rear cover.
   G.5.2.20 Lower rear cover

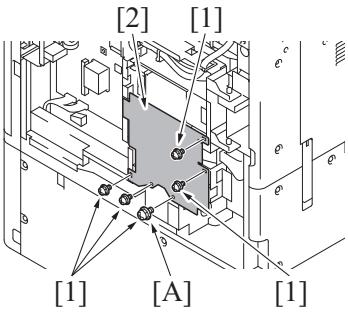


2. Remove five screws [1], and remove the protective sheet [2].
   **NOTE**
   - **When attaching the protective sheet, note that only the size of the screw "A" is different.**

3. To reinstall, reverse the order of removal.

### 5.2.22 Upper rear cover

1. Remove the lower rear cover.
   G.5.2.20 Lower rear cover
2. Remove the scanner rear cover.
   G.5.2.1 Scanner rear cover

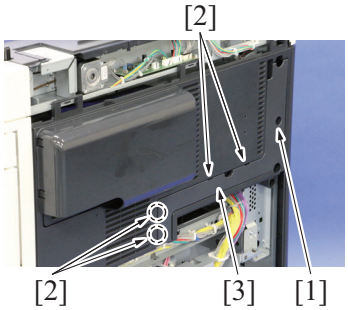


3. Remove the screw [1] and four tabs [2], and remove the DF cable cover [3].

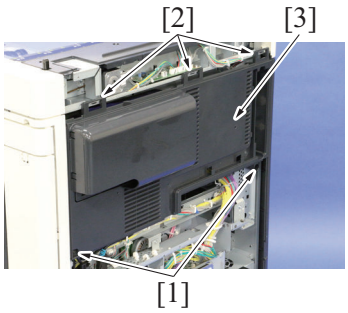


4. Remove two screws [1] and three tabs [2], and remove the upper rear cover [3].

5. To reinstall, reverse the order of removal.

### 5.2.23 Tray 1

1. Slide out the tray 1, and remove the paper.

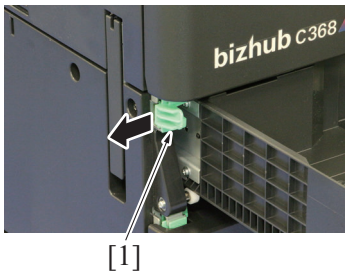


2. Unlock the stopper [1].

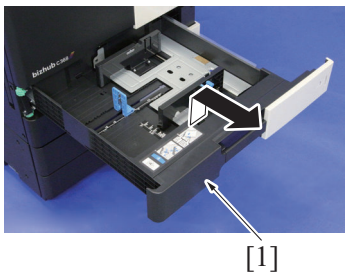


3. Hold up the tray 1 [1] to remove it.

4. To reinstall, reverse the order of removal.

### 5.2.24 Tray 2

1. Slide out the tray 2, and remove the paper.

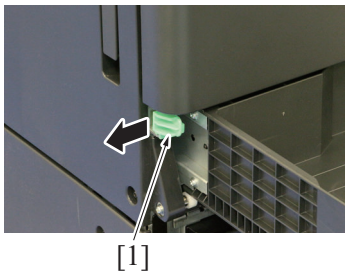


2. Unlock the stopper [1].

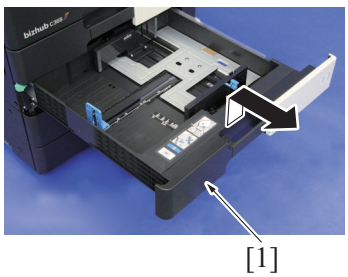


3. Hold up the tray 2 [1] to remove it.

4. To reinstall, reverse the order of removal.

## 5.3 Disassembly/reassembly procedure (Units)

### 5.3.1 LED exposure unit

1. Remove the scanner upper rear cover.
   G.5.2.5 Scanner upper rear cover
2. Remove the scanner front cover.
   G.5.2.3 Scanner front cover
3. Remove the original glass.
   G.5.2.12 Original glass

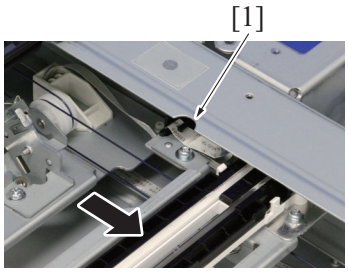


4. Move the LED exposure unit assy to screw access point [1].

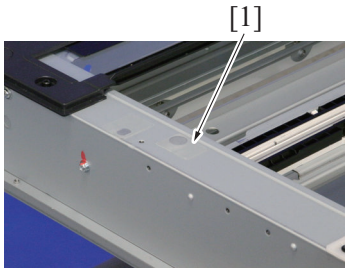


5. Peel off seal [1].

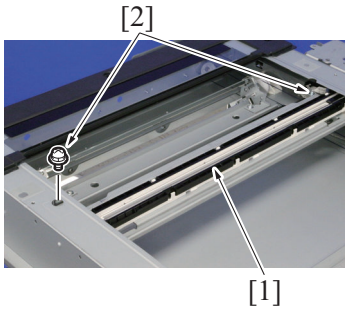


6. Remove two screws [2] of the LED exposure unit assy [1].

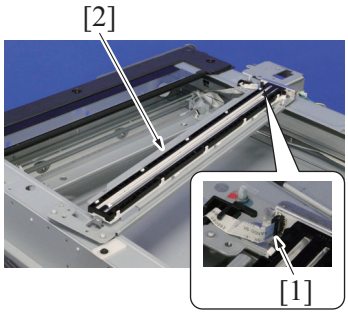


7. Disconnect the flat cable [1], and remove the LED exposure unit assy [2].

8. Remove two screws [1], and remove the LED exposure unit [2].

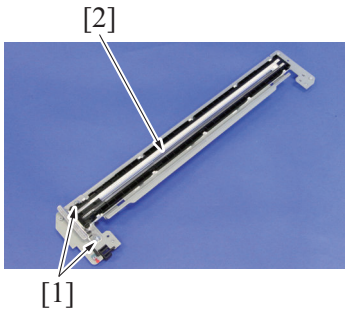


9. To reinstall, reverse the order of removal.

**NOTE**

- **When installing the LED exposure unit, be careful not to pinch the flat cable with the screws.**
- **When replacing the LED exposure unit with a brand-new one, peel the protective film from the unit after attaching it.**
- **When replacing the LED exposure unit, order a replacement seal (Parts number: 4581 1625 ##).**

### 5.3.2 Paper feed unit

1. Slide out the tray 1 and tray 2.
2. Open the right door and the regist unit.

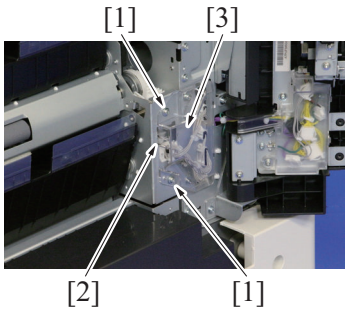


3. Remove two screws [1] and the tab [2], and remove the connector cover [3].

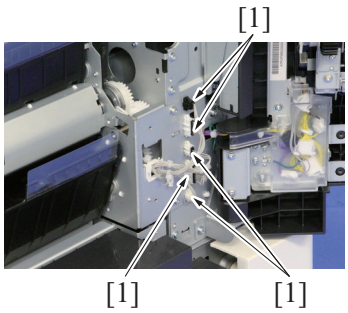


4. Disconnect five connectors [1].

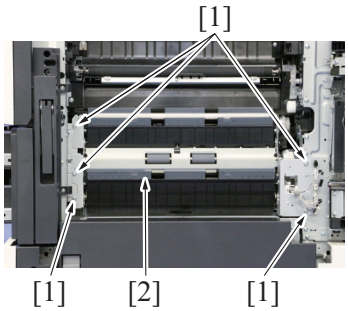


5. Remove five screws [1], and remove the paper feed unit [2].

6. To reinstall, reverse the order of removal.

### 5.3.3 PH unit

**WARNING**

- Do not supply power with the write unit (PH unit) shifted from the specified mounting position.
  The laser light can enter your eye, leading to a risk of loss of eyesight.
- Do not disassemble or adjust the write unit (PH unit) incorporating a laser.
  The laser light can enter your eye, leading to a risk of loss of eyesight.

#### (1) Removal procedure

1. Remove the waste toner box.
   F.6.6.1 Replacing the waste toner box
2. Remove the front lower cover.
   G.5.2.14 Front lower cover
3. Remove the left cover.
   G.5.2.16 Left cover
4. Remove the exit tray.
   G.5.2.17 Exit tray
5. Remove the DC power supply.
   G.5.4.3 DC power supply (DCPU)
6. Remove the PH relay board.
   G.5.4.12 PH relay board (PHRYB)

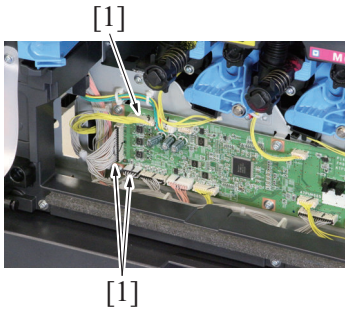


7. Disconnect three connectors [1] on the front side board.

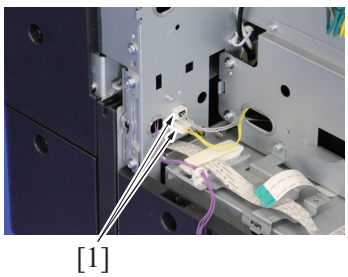


8. Disconnect two connectors [1].

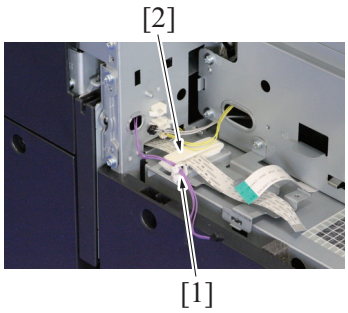


9. Remove the harness from the wire saddle [1].
10. Remove the flat cable from the cable clamp [2].

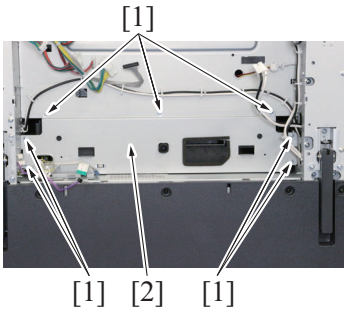


11. Remove seven screws [1], and remove the metal plate [2].

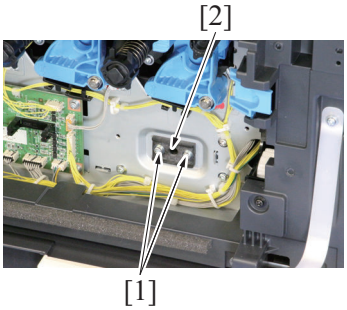


12. Remove two screws [1], and remove the set pin [2] for the PH unit.

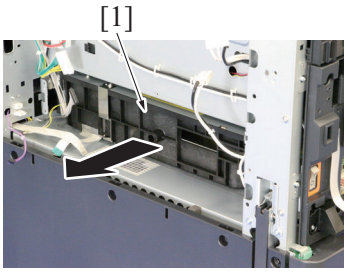


13. Remove the PH unit [1].

14. To reinstall, reverse the order of removal.
15. Carry out the [Print Head Skew Reset] after selecting [Service Mode] -> [Machine] -> [Skew adjustment].
16. Carry out the [Service Mode] -> [Machine] -> [Printer Area] -> [Leading Edge Adjustment].
17. Carry out the [Service Mode] -> [Machine] -> [Printer Area] -> [Printer Image Centering Side 1].

### 5.3.4 Sub hopper unit

1. Remove the front door.
   G.5.2.13 Front door
2. Remove the waste toner box.
   F.6.6.1 Replacing the waste toner box
3. Remove the front lower cover.
   G.5.2.14 Front lower cover
4. Remove the front cover.
   G.5.2.15 Front cover
5. Remove the toner cartridge/Y,M,C,K.
   F.6.3.1 Replacing the toner cartridge
6. Remove the drum unit/Y,M,C,K.
   F.6.1.1 Replacing the drum unit
7. Remove the developing unit/Y,M,C,K.
   F.6.2.1 Replacing the developing unit
8. Remove the left cover.
   G.5.2.16 Left cover

9. Remove the exit tray.
G.5.2.17 Exit tray

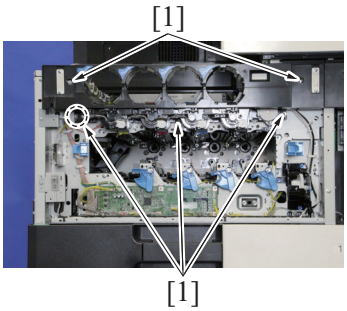


10. Remove five screws [1] of the sub hopper unit.

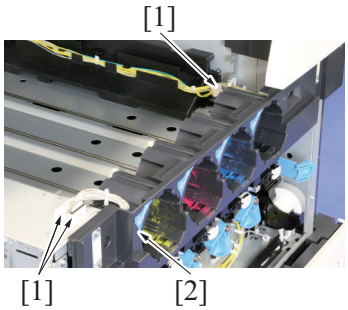


11. Disconnect three connectors [1], and remove the sub hopper unit [2].

12. To reinstall, reverse the order of removal.

### 5.3.5 Right door unit

1. Remove the rear right cover.
G.5.2.18 Rear right cover
2. Open the right door.

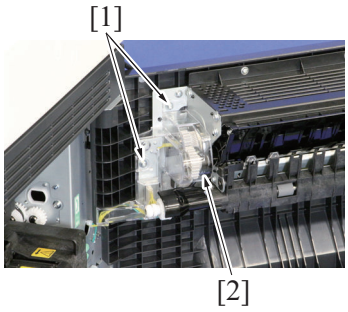


3. Remove two screws [1], and remove the connector cover/1 [2].

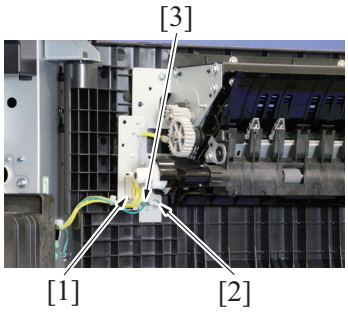


4. Disconnect the connector [1].
5. Remove the screw [2], and remove the ground terminal [3].

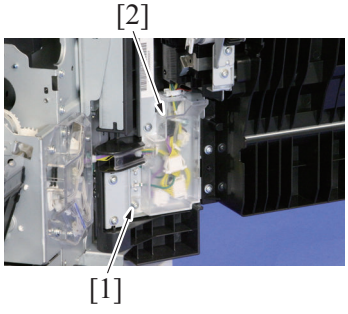


6. Remove the screw [1], and remove the connector cover/2 [2].

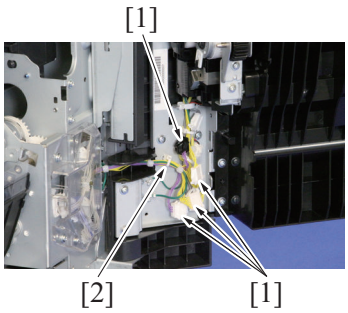


7. Disconnect four connectors [1], and remove the harness from the wire saddle [2].

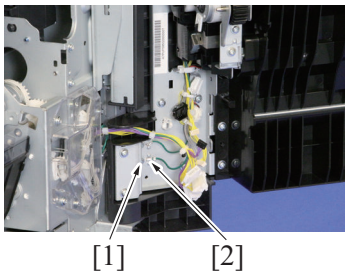


8. Remove the screw [1], and remove the ground terminal [2].

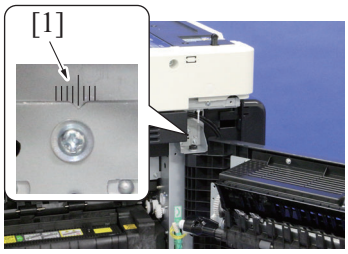


9. Draw the gauge line to the hinge mounting part [1] along the cutout of the hinge on the frame of the main body.

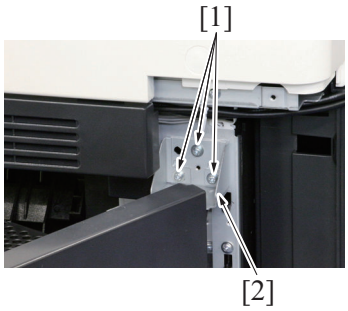


10. Remove three screws [1], and remove the hinge (upper section) [2].

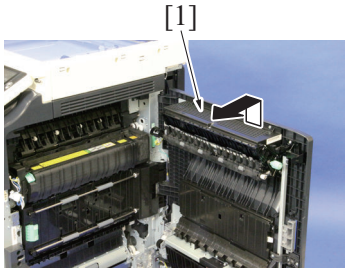


11. Hold up the right door unit [1] to remove it.

12. To reinstall, reverse the order of removal.

**NOTE**

- **When installing the right door unit, align it with the guide lines drawn on the scales indicated on the machine frame. Open and close the right door to check for any interference and correct if necessary.**

### 5.3.6 Manual bypass tray unit

1. Open the right door.

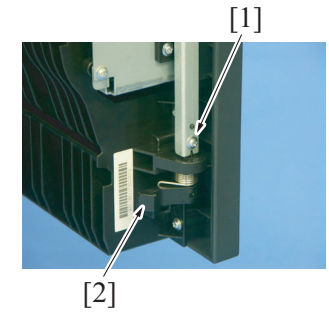


2. Remove the screw [1], and remove the shaft holder/1 [2].

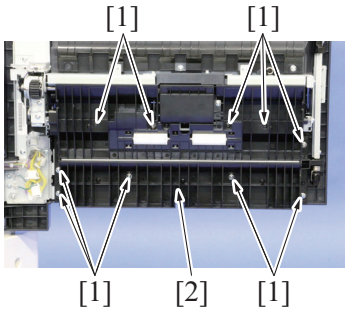


3. Remove 10 screws [1], and remove the vertical transport roll assy [2].

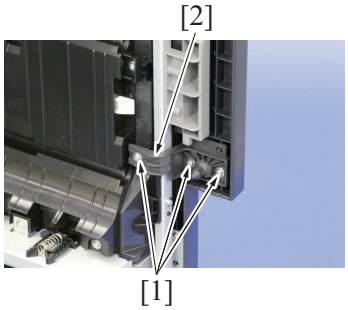


4. Remove three screws [1], and remove the shaft holder/2 [2].

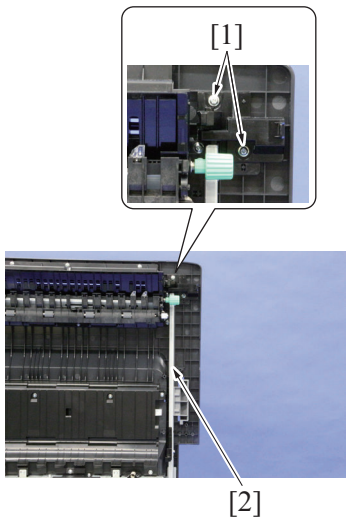


5. Remove two screws [1], and remove the right door lever assy [2].

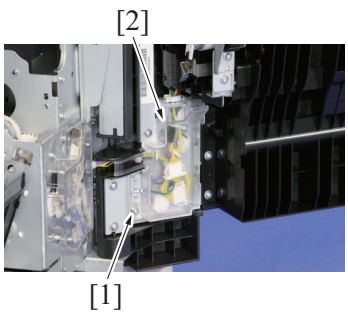


6. Remove the screw [1], and remove the connector cover [2].

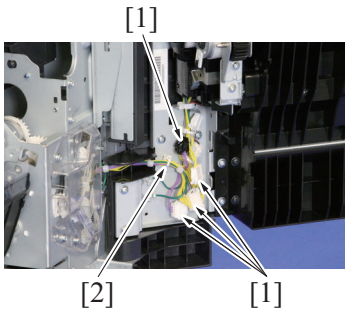


7. Disconnect four connectors [1], and remove the harness from the wire saddle [2].

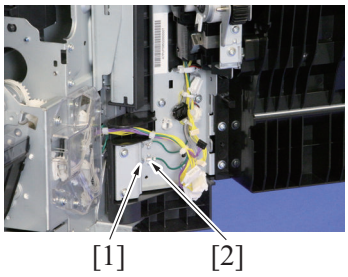


8. Remove the screw [1], and remove the ground terminal [2].

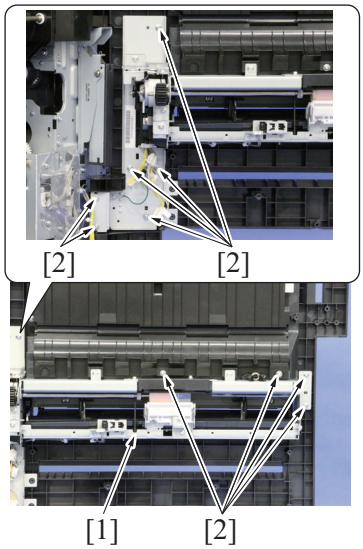


9. Remove 10 screws [2] of the manual bypass tray unit [1].

10. Remove the manual bypass tray unit [1].

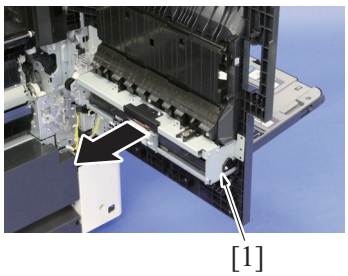


11. To reinstall, reverse the order of removal.

### 5.3.7 Regist unit

1. Remove the rear right cover.
   G.5.2.18 Rear right cover
2. Remove the right door unit.
   G.5.3.5 Right door unit

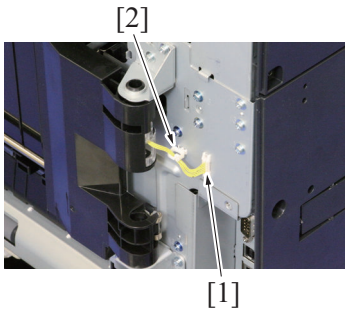


3. Disconnect the connector [1], and remove the harness from the wire saddle [2].

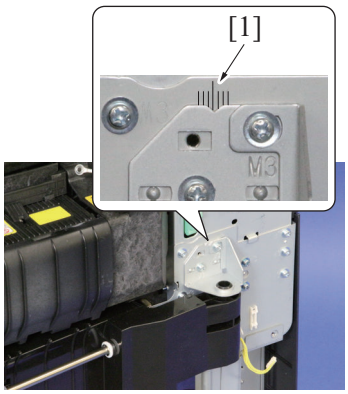


4. Draw the gauge line to the hinge mounting part [1] along the cutout of the hinge on the frame of the main body.

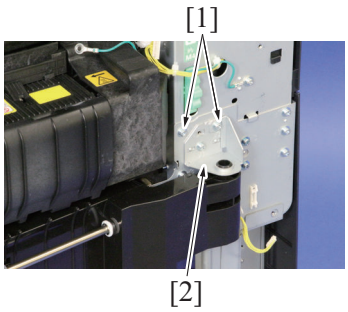


5. Remove two screws [1], and remove the hinge [2].

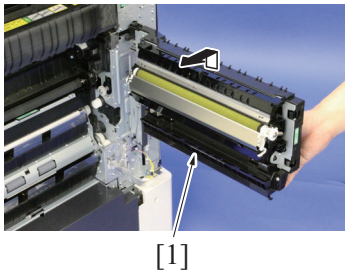


6. Hold up the regist unit [1] to remove it.

7. To reinstall, reverse the order of removal.

### 5.3.8 Hard disk (A)

1. Remove the lower rear cover.
   G.5.2.20 Lower rear cover
2. Remove the protective sheet.
   G.5.2.21 Protective sheet

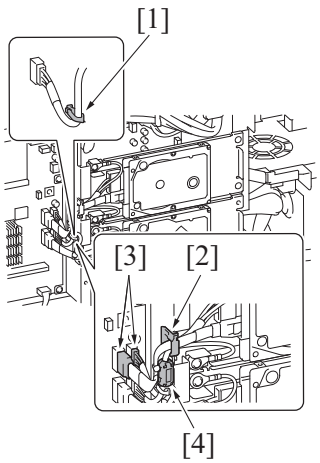


3. Remove the harness from the wire saddle [1].
4. Remove the harness from the edge cover [2].
5. Disconnect two connectors [3].

**NOTE**

- **When the ferrite core [4] has been installed, be sure to install the hard disk at the position shown in the illustration.**
- **Ensure that the cables do not contact with the MFP board at connecting the connectors [3].**
- **When the security kit SC-508 has been installed, ensure that the cables do not contact with the DSC board at connecting the connectors [3].**

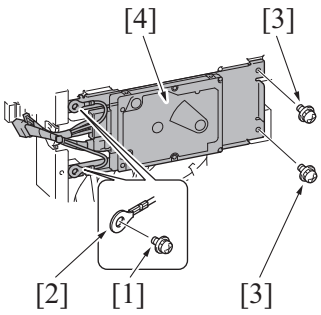


6. Remove two screws [1], and remove two ground wires [2].
7. Remove two screws [3], and remove the hard disk assy [4].

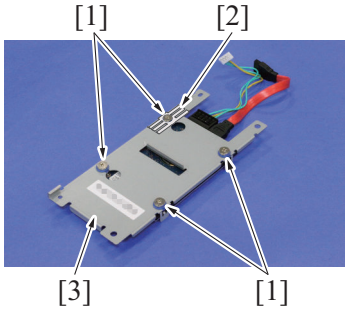


8. Remove four screws [1].
9. Remove the plate spring [2], and remove the plate [3].

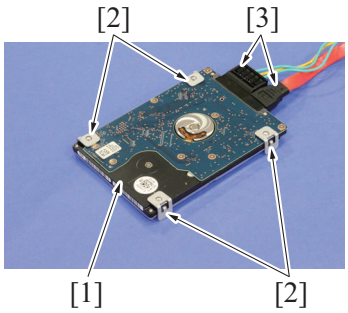


10. Remove four metal plates [2] and two connectors [3] from the hard disk [1].

11. To reinstall, reverse the order of removal.
12. Select [Service Mode] -> [State Confirmation] -> [Memory/Storage Adjustment] -> [Format], and conduct the HDD format function.
13. [Service Mode] -> [State Confirmation] -> [Memory/Storage Adjustment] -> [Storage R/W Check]

### 5.3.9 How to open the PWB box

1. Remove the lower rear cover.
   G.5.2.20 Lower rear cover

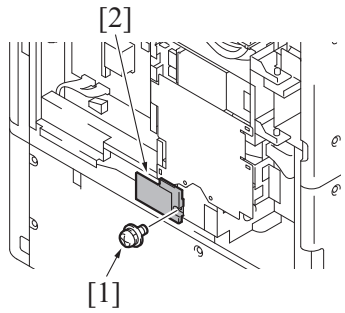


2. Remove the screw [1], and remove the connector cover [2].

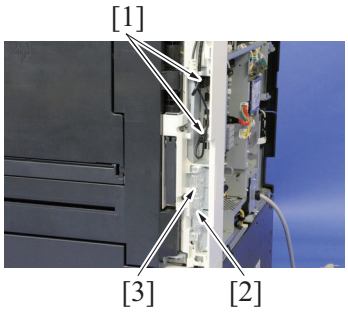


3. Disconnect two connectors [1] from the PWB box side panel.
4. Remove the screw [2], and remove the connector cover [3].

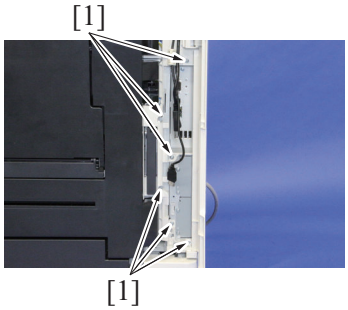


5. Remove six screws [1] from the PWB box side panel.

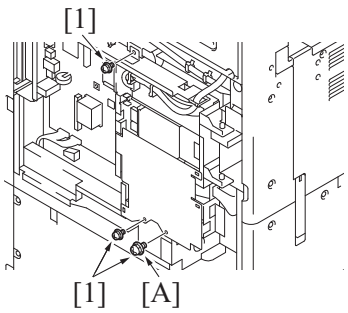


6. Remove three screws [1] from the PWB box front panel.
   **NOTE**
   - **Note that only the size of the screw "A" is different.**

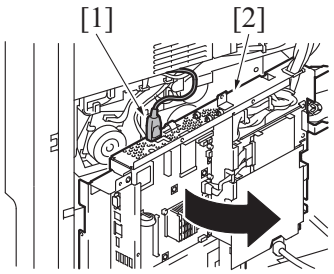


7. Disconnect the connector [1].
8. Open the PWB box [2].

### 5.3.10 Main drive unit

1. Remove the drum unit.
   F.6.1.1 Replacing the drum unit
2. Remove the rear right cover.
   G.5.2.18 Rear right cover
3. Remove the lower rear cover.
   G.5.2.20 Lower rear cover

4. Remove the scanner rear cover.
   G.5.2.1 Scanner rear cover
5. Remove the upper rear cover.
   G.5.2.22 Upper rear cover
6. Open the PWB box.
   G.5.3.9 How to open the PWB box
7. Remove the high voltage unit.
   G.5.4.8 High voltage unit (HV)
8. Remove the transport motor.
   G.5.5.1 Transport motor (M1)
9. Remove the PC motor.
   G.5.5.2 PC motor (M2)
10. Remove the developing motor.
    G.5.5.14 Developing motor (M21)

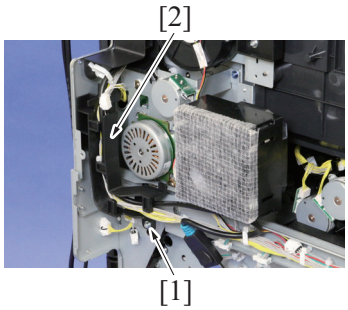


11. Remove the screw [1].
12. Remove the harness guide [2] as clearing the harness.

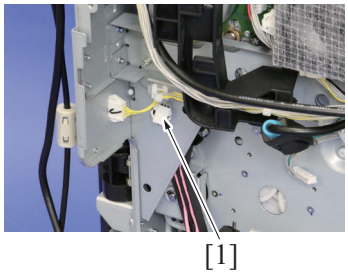


13. Disconnect the connector [1].

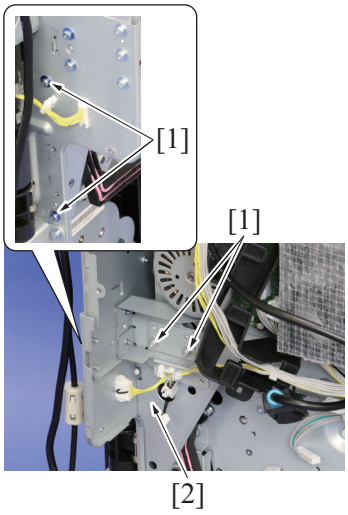


14. Remove four screws [1], and remove the metal plate [2].

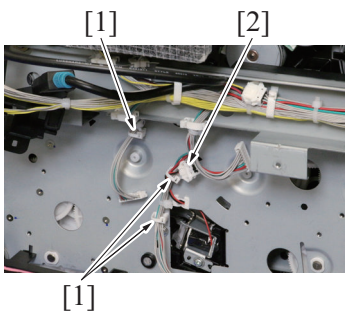


15. Remove the harness from the three wire saddles [1].
16. Disconnect the connector [2].

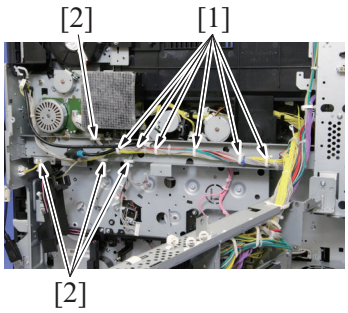


17. Remove the harness from six wire saddles [1] and four edge covers [2].

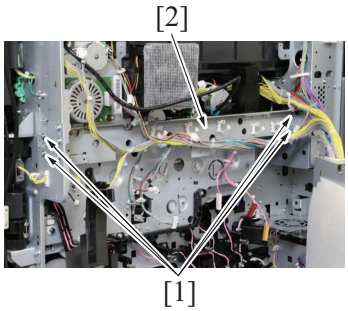


18. Remove four screws [1].
19. Remove the reinforcing plate [2] as clearing the harness.

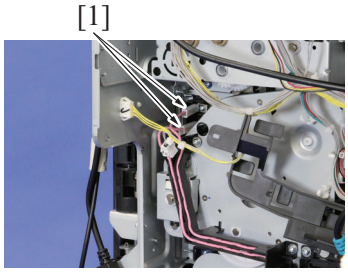


20. Remove two solderless terminals [1].

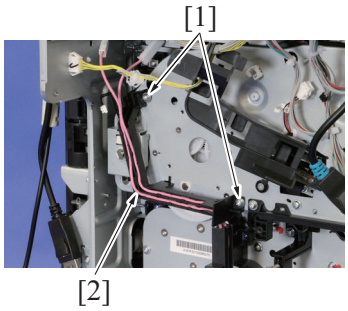


21. Remove two screws [1], and remove the harness guide [2].

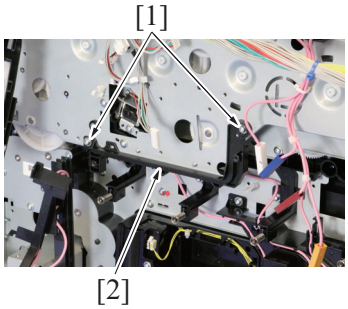


22. Remove two screws [1], and remove the bracket [2].

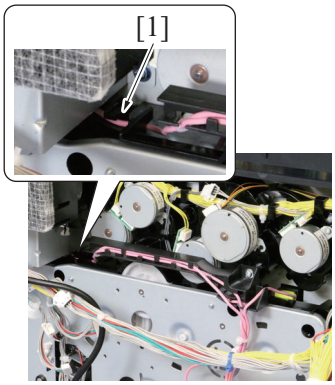


23. Remove the harness from harness guide [1].

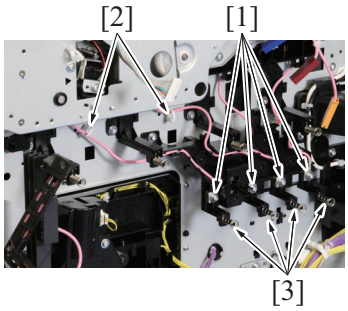


24. Remove four screws [1], and remove the harness from the harness guide.
25. Remove the harness from two wire saddles [2].
**NOTE**
- **Make sure not to lose the spring [3].**

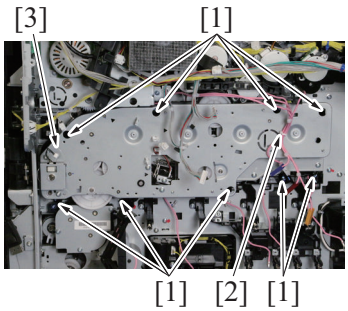


26. Remove nine screws [1], and remove the harness from the wire saddle [2].
27. Remove the main drive unit [3].

28. To reinstall, reverse the order of removal.

### 5.3.11 Transport unit

1. Remove the waste toner box.
F.6.6.1 Replacing the waste toner box
2. Remove the transfer belt unit.
F.6.4.3 Replacing the transfer belt unit
3. Remove the front door.
G.5.2.13 Front door
4. Remove the front lower cover.
G.5.2.14 Front lower cover
5. Remove the front cover.
G.5.2.15 Front cover

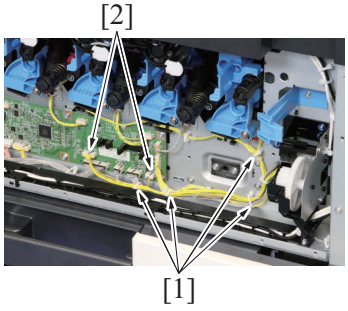


6. Remove the harness from four wire saddles [1].
7. Disconnect two connectors (CN8, CN11) [2] on the front side board.

8. Open the right door and the regist unit.

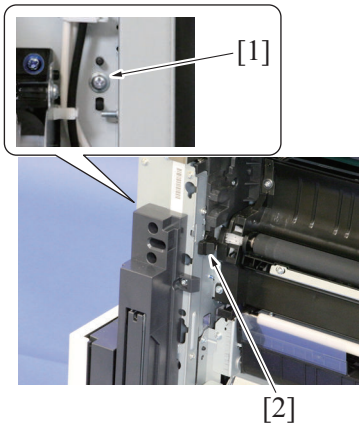


9. Remove the screw [1], and remove the stopper [2].

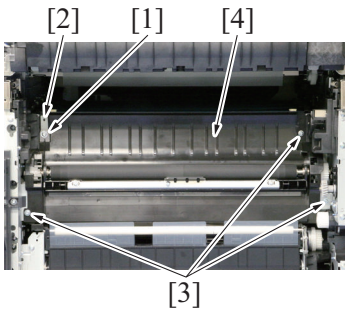


10. Remove the screw [1], and remove the plate spring [2].
11. Remove three screws [3], and remove the transport unit [4].
    **NOTE**
    - **When removing the transport unit [4], be careful not to damage or deform the guide sheet of the tray 1 paper feed unit.**
12. To reinstall, reverse the order of removal.

### 5.3.12 Fusing drive unit

1. Remove the fusing unit.
   F.6.9.1 Replacing the fusing unit
2. Remove the rear right cover.
   G.5.2.18 Rear right cover
3. Remove the lower rear cover.
   G.5.2.20 Lower rear cover
4. Remove the scanner rear cover.
   G.5.2.1 Scanner rear cover
5. Remove the upper rear cover.
   G.5.2.22 Upper rear cover
6. Open the PWB box.
   G.5.3.9 How to open the PWB box
7. Remove the toner cartridge cooling fan.
   G.5.7.4 Toner cartridge cooling fan (FM4)
8. Remove the fusing motor.
   G.5.5.3 Fusing motor (M3)
9. Remove the fusing pressure motor.
   G.5.5.11 Fusing pressure motor (M11)
10. Remove the fusing pressure motor.
    G.5.5.11 Fusing pressure motor (M11)
11. Remove the transport motor.
    G.5.5.1 Transport motor (M1)
12. Remove the PC motor.
    G.5.5.2 PC motor (M2)
13. Remove the developing motor.
    G.5.5.14 Developing motor (M21)

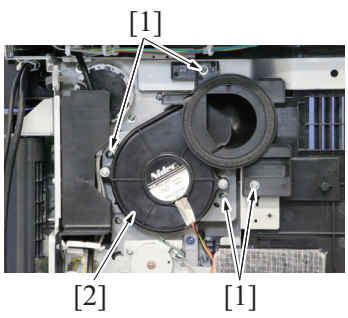


14. Remove four screws [1], and remove the paper cooling fan assy [2].

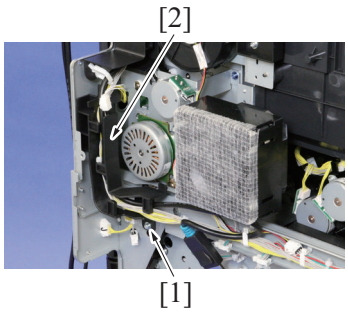


*15.* Remove the screw [1].
*16.* Remove the harness guide [2] as clearing the harness.

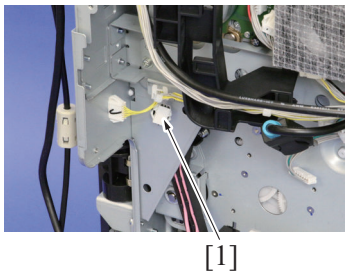


*17.* Disconnect the connector [1].

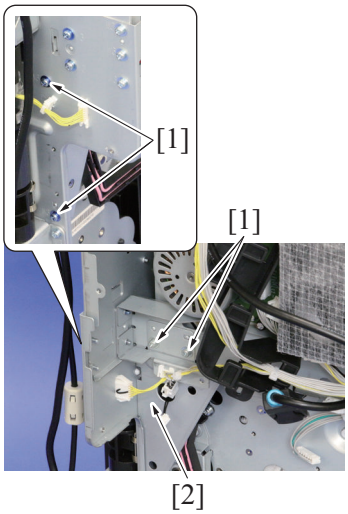


*18.* Remove four screws [1], and remove the metal plate [2].

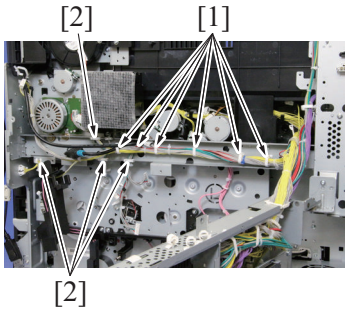


*19.* Remove the harness from six wire saddles [1] and four edge covers [2].

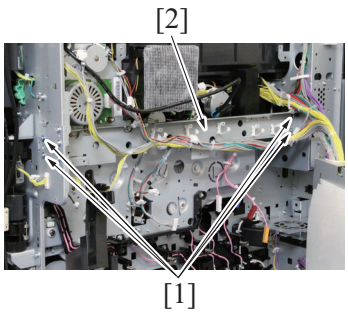


*20.* Remove four screws [1].
*21.* Remove the reinforcing plate [2] as clearing the harness.

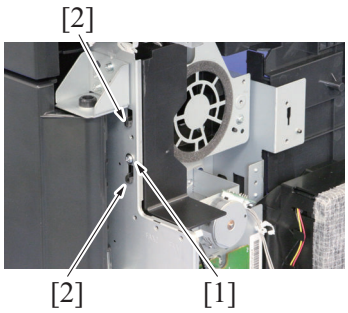


22. Remove the screw [1], and remove two tabs [2].

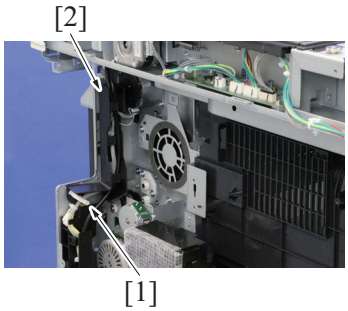


23. Remove the harness from the wire saddle [1].
24. Remove the harness and cables together with the harness guide [2].

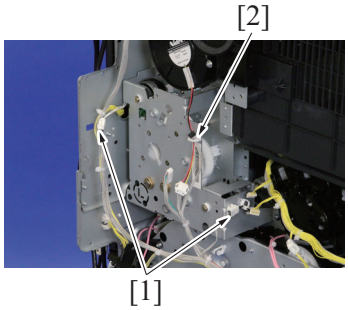


25. Disconnect two connectors [1].
26. Remove the harness from the wire saddle [2].

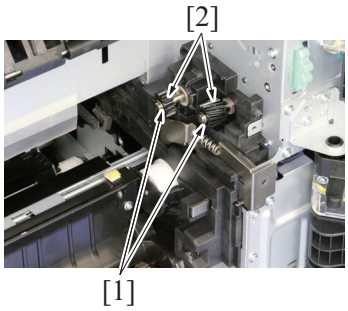


27. Remove the E-ring [1] each, and remove two gears [2].

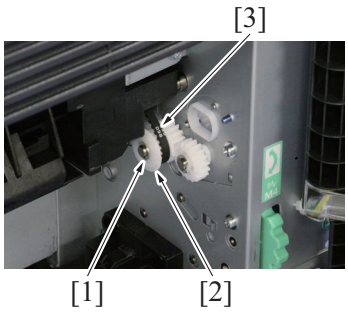


28. Remove the E-ring [1], and remove the flange [2].
29. Remove the belt [3] from the gear.

30. Remove six screws [1], and remove the fusing drive unit [2].

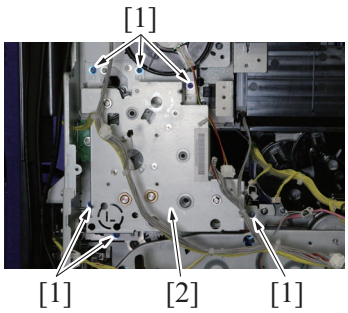


31. To reinstall, reverse the order of removal.

### 5.3.13 Hopper drive unit

1. Remove the toner cartridge.
   F.6.3.1 Replacing the toner cartridge
2. Remove the rear right cover.
   G.5.2.18 Rear right cover
3. Remove the lower rear cover.
   G.5.2.20 Lower rear cover
4. Remove the scanner rear cover.
   G.5.2.1 Scanner rear cover
5. Remove the upper rear cover.
   G.5.2.22 Upper rear cover
6. Remove the left cover.
   G.5.2.16 Left cover
7. Remove the exit tray.
   G.5.2.17 Exit tray
8. Open the PWB box.
   G.5.3.9 How to open the PWB box
9. Toner cartridge cooling fan
   G.5.7.4 Toner cartridge cooling fan (FM4)
10. Remove the transport motor.
    G.5.5.1 Transport motor (M1)
11. Remove the PC motor.
    G.5.5.2 PC motor (M2)
12. Remove the developing motor.
    G.5.5.14 Developing motor (M21)

13. Remove the screw [1].
14. Remove the harness guide [2] as clearing the harness.

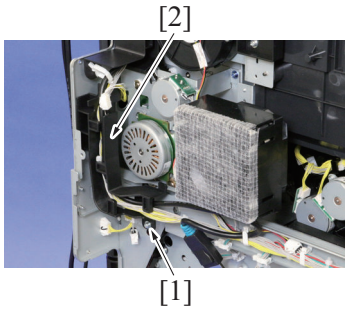


15. Disconnect the connector [1].

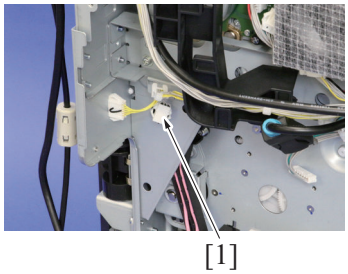

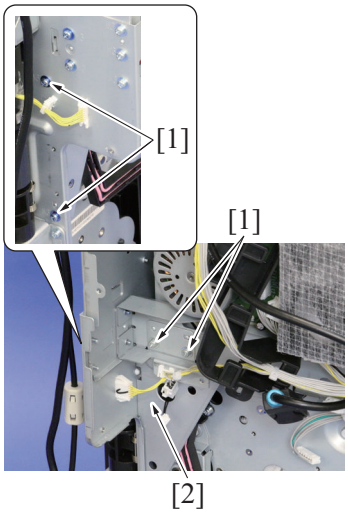


*16.* Remove four screws [1], and remove the metal plate [2].

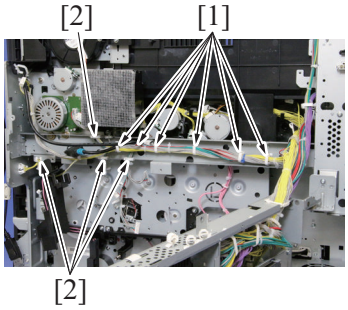


*17.* Remove the harness from six wire saddles [1] and four edge covers [2].

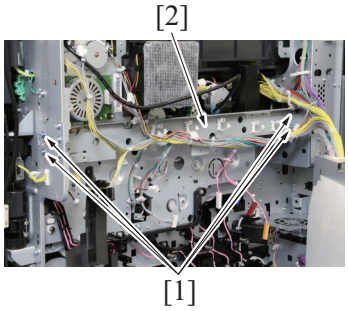


*18.* Remove four screws [1].
*19.* Remove the reinforcing plate [2] as clearing the harness.

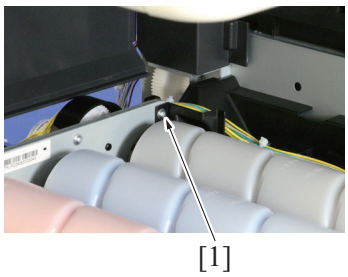


*20.* Remove the screw [1].

*21.* Remove the toner cartridge/Y,M,C,K.
G.5.5.10 Toner cartridge motor/Y,M,C (M10)
*22.* Remove the toner supply motor/C.
G.5.5.7 Toner supply motor/C (M7)
*23.* Remove the toner cartridge motor/K.
G.5.5.15 Toner cartridge motor/K (M25)
*24.* Remove the toner supply motor/M.
G.5.5.8 Toner supply motor/M (M8)
*25.* Remove the toner supply motor/Y.
G.5.5.9 Toner supply motor/Y (M9)

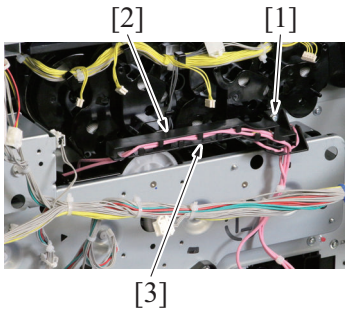


*26.* Remove the screw [1] and the tab [2], and remove the harness guide [3].

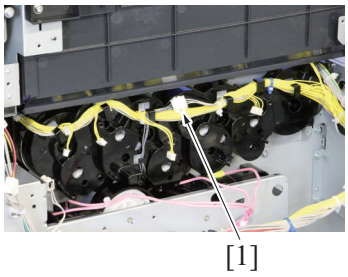


*27.* Remove the connector [1] to move the harness out of the working area.

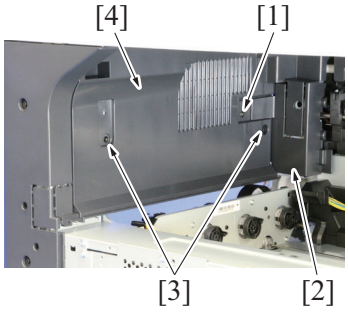


*28.* Remove the screw [1], and remove the cover [2].
*29.* Remove two screws [3], and remove the cover [4].

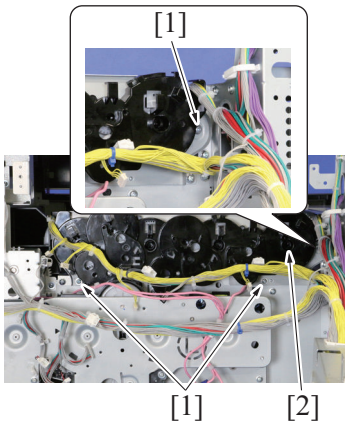


*30.* Remove three screws [1], and remove the hopper drive unit [2].

*31.* To reinstall, reverse the order of removal.

## 5.4 Disassembly/reassembly procedure (Boards)

### 5.4.1 CCD board (CCDB)

#### (1) Removal procedure

1. Remove the scanner right cover.
   G.5.2.2 Scanner right cover
2. Remove the original glass.
   G.5.2.12 Original glass

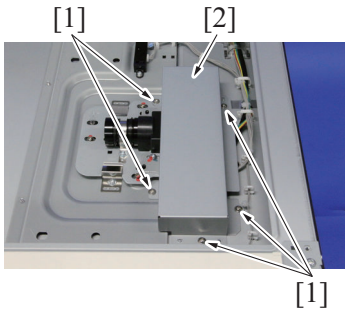


3. Remove five screws [1], and remove the CCD board protective shield [2].

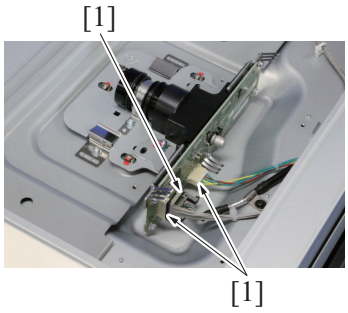


4. Disconnect three connectors [1].

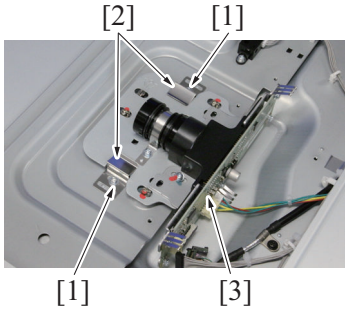


5. Remove the screw [1] each, and remove two retainer plates [2].
6. Remove the CCD board [3].

### (2) Reinstall procedure

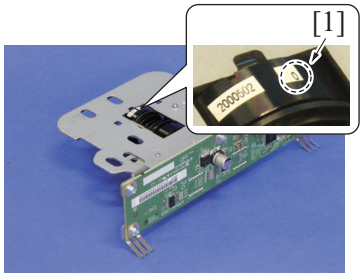


1. Check the mark [1] on lens of the CCD board.
   **NOTE**
   - **The mark is be "-", "0", or "+".**

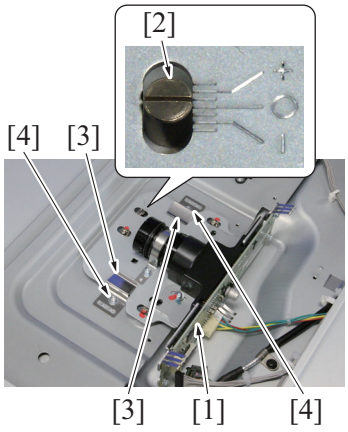


2. Install the CCD board [1] to the main body.
3. Set the scale [2] of the CCD board to the same position as the mark checked on step 1, and secure it with two retainer plates [3] and the screw [4] at two points.
4. For the rest of the mounting procedure, reverse the order of removal.
5. Reinstall the original glass.

6. Turn ON the main power switch.
7. Set the [Service Mode] -> [System 2] -> [CCD Calibration] to [OFF].
8. Set the [Service Mode] -> [System 2] -> [Line Mag Setting] to [OFF].
9. Carry out the [Service Mode] -> [Machine] -> [Printer Area] -> [Paper Feed Direction Adj.].
10. Carry out the [Service Mode] -> [Machine] -> [Scan Area] -> [Main Scan Zoom Adj.]. If the specifications are not met, loosen the CCD board mounting screws and move the CCD board in the sub scan direction as necessary.
    **NOTE**
    - **Hold the CCD board by hand when moving it. NEVER use a screwdriver or similar tool to tap to move it, as a varied distance between the CCD sensor and lens results.**

11. Carry out the [Service Mode] -> [Machine] -> [Scan Area] -> [Scanner Image Side Edge].

### 5.4.2 Tray 1 CD paper size board (CDPSB/1), tray 2 CD paper size board (CDPSB/2)

**NOTE**
- **The tray 1 CD paper size board and the tray 2 CD paper size board are of the same form and mechanism. This procedure shows the steps taken for the tray 1 CD paper size board.**

1. Remove the lower rear cover.
   G.5.2.20 Lower rear cover
2. Open the PWB box.
   G.5.3.9 How to open the PWB box
3. Remove the high voltage unit.
   G.5.4.8 High voltage unit (HV)
4. Slide out the tray 1.

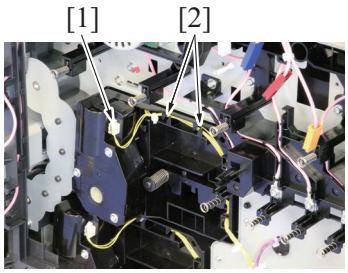


5. Disconnect the connector [1], and remove the harness from the harness guide [2].

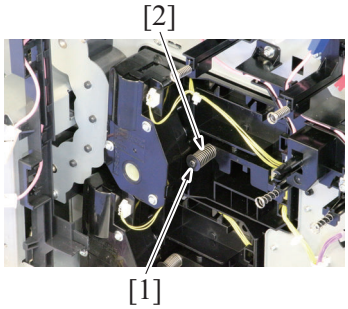


6. Remove screw [1] and spring [2].

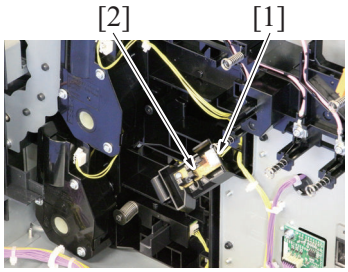


7. Remove the connector [1], and remove the tray 1 CD paper size board assy [2].

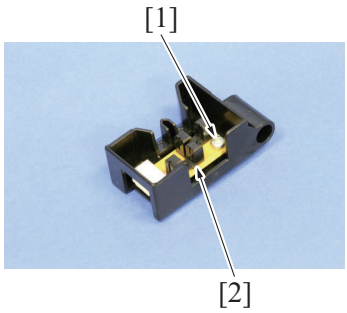


8. Remove the screw [1], and remove the tray 1 CD paper size board [2].

9. To reinstall, reverse the order of removal.

### 5.4.3 DC power supply (DCPU)

1. Remove the left cover.
   G.5.2.16 Left cover
2. Remove the exit tray.
   G.5.2.17 Exit tray

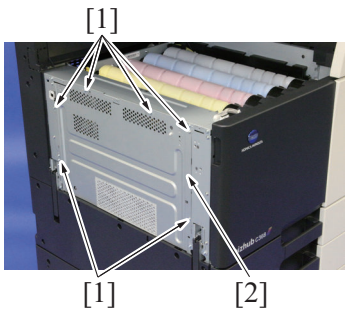


3. Remove six screws [1], and remove the DC power supply protective shield [2].

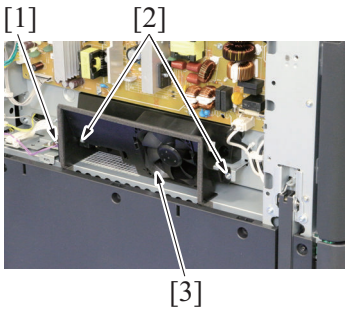


4. Disconnect the connector [1].
5. Remove two screws [2], and remove the power supply cooling fan assy [3].

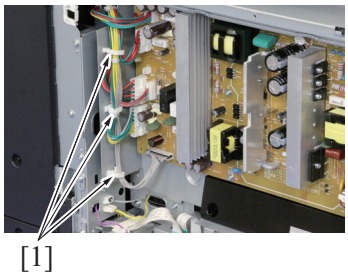


6. Remove the harness from three wire saddles [1].

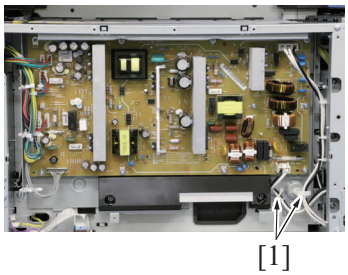


7. Remove the cable from two wire saddles [1].
8. Disconnect all connectors on the DC power supply.

9. Remove four screws [1], and remove the DC power supply [2].

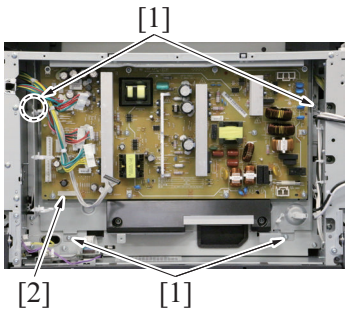


10. To reinstall, reverse the order of removal.

### 5.4.4 EEPROM/1, EEPROM/2

**NOTE**

- **Never use the combination of the used EEPROM removed from another machine and the original MFP board. This combination causes corruption of stored data.**
  **Note that the combination of the original EEPROM and the used MFP board removed from another machine also causes the same problem.**
- **Always replace the EEPROM/1 and EEPROM/2 as a set.**
  **Replace them one at a time to prevent a mix-up between new and old and the device positions.**

1. Remove the lower rear cover.
   G.5.2.20 Lower rear cover
2. Remove the protective sheet.
   G.5.2.21 Protective sheet
3. Remove the hard disk (A).
   G.5.3.8 Hard disk (A)
4. Remove the optional hard disk (B) HD-524 if it is installed.
   G.6.18.1 Hard disk (B) (HDD-524)
5. Mark the EEPROM/1.
   **NOTE**
   - **Mark the EEPROMs to distinguish old from new, and mark EEPROM/1 and EEPROM/2 to distinguish from each other.**
     **Marks should be helpful to making easy distinction regardless of the style of them.**
6. Remove the EEPROM/1 [1].

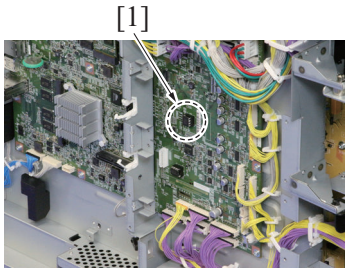


7. Mark the EEPROM/2.
   **NOTE**
   - **Mark the EEPROMs to distinguish old from new, and mark EEPROM/1 and EEPROM/2 to distinguish from each other.**
     **Marks should be helpful to making easy distinction regardless of the style of them.**
8. Remove the EEPROM/2 [1].

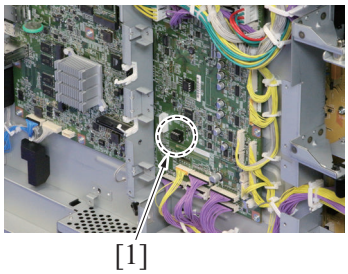

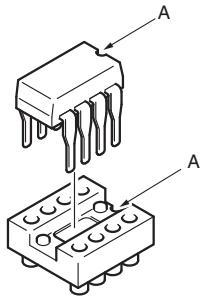


9. To reinstall, reverse the order of removal.

**NOTE**

- **When mounting EEPROM, align the notches (indicated by "A" in the illustration).**

**NOTE**

**Since the counter will be cleared when the EEPROM is replaced with a new one, replace the following parts with new ones.**

**Configure [New Release] in Service Mode before replacing the image transfer belt unit and the fusing unit. Besides, configure [Counter clear] before replacing the transfer roller.**

- **Developing unit/Y,M,C,K**
- **Drum unit/Y,M,C,K**
- **Toner cartridge/Y,M,C,K**
- **Image Transfer Belt Unit**
- **Fusing Unit**
- **Transfer roller**
- **Feed roller, pick-up roller, separation roller (including options)**

**NOTE**

- **When the new EEPROM is installed, the error message: "License management error occurred." is displayed. Conduct the i-Option recovery operation.**

10. Open the front door and turn on the main power supply switch.
11. Enter the Service Mode. Make individual adjustments shown in the following table in the order listed, using the machine maintenance list and the adjustment lists that were output at the time of main body installation and maintenance.

**NOTE**

- **Ensure the front door is opened.**

| Adjustment items | Service mode readjustment items | | | Ref. Page |
|---|---|---|---|---|
| 1 | Machine | Color Registration Adjustment | Cyan | I.5.4.8 Color Registration Adjustment |
| 2 | | | Magenta | |
| 3 | | | Yellow | |
| 4 | Imaging Process Adjustment | Image Background Adj | | I.5.6.4 Image Background Adj |
| 5 | | Max Image Density Adj | | I.5.6.2 Max Image Density Adj |
| 6 | | Grad/Dev AC Bias V Selection | | I.5.6.11 Grad/Dev AC Bias V Selection |
| 7 | System 1 | Change Warm Up Time | | I.5.15.13 Warm-up |
| 8 | Imaging Process Adjustment | Charge AC Output fine adjustment | | I.5.6.13 Charge AC Output fine adjustment |
| 9 | System 2 | Unit Change | Warning Display | I.5.16.5 Unit Change |

**NOTE**

- **Conduct the readjustment of the above adjustment items before the starting the initial warm-up operation after replacing the EEPROMs.**

12. Turn off the main power switch.
13. Turn on the main power switch and close the front door. Check to see that warm-up and image stabilization operations are completed normally.
14. Enter the Service Mode again. Make individual adjustments shown in the following table in the order listed, using the machine management list and the adjustment lists that were output at the time of main body installation and maintenance.

| Adjustment items | Service mode readjustment items | | | Ref. Page |
|---|---|---|---|---|
| 1 | Machine | Manual Bypass Tray Width Adj | | I.5.4.11 Manual Bypass Tray Width Adj |
| 2 | | Printer Reg. Loop Adj. | | I.5.4.7 Printer Reg. Loop Adj. |
| 3 | | Fusing Temperature | | I.5.4.2 Fusing Temperature |
| 4 | Finisher | FS-FN Adjustment | | I.5.29 Finisher |
| 5 | Machine | Printer Area | Paper Feed Direction Adj. | I.5.4.5.(5) Paper Feed Direction Adj. |
| 6 | | Fusing Transport Speed | | I.5.4.3 Fusing Transport Speed |
| 7 | | Printer Area | Printer Image Centering Side 1 | I.5.4.5.(2) Printer Image Centering Side 1 |
| 8 | | | Prt. Image Center. Side 2 (Dup) | I.5.4.5.(4) Prt. Image Center. Side 2 (Dup) |
| 9 | | | Leading Edge Adjustment | I.5.4.5.(1) Leading Edge Adjustment |
| 10 | | | Leading Edge Adj. Side 2 (Duplex) | I.5.4.5.(3) Leading Edge Adj. Side 2 (Duplex) |

| | | | | |
|---|---|---|---|---|
| 11 | | | Tray Printing Position: Tip | I.5.4.5.(6) Tray Printing Position: Tip |
| 12 | Imaging Process Adjustment | Transfer Voltage Fine Adj | 2nd Transfer Adj. | I.5.6.5.(2) 2nd Transfer Adj. |
| 13 | | | Primary transfer adj. | I.5.6.5.(1) Primary transfer adj. |

### 5.4.5 eMMC board (eMMC)

**NOTE**

- **Never use the combination of the used eMMC board removed from another machine and the original MFP board. This combination causes corruption of stored data.**
  **Note that the combination of the original eMMC board and the used MFP board removed from another machine also causes the same problem.**

1. Remove the lower rear cover.
   G.5.2.20 Lower rear cover
2. If an optional security kit SC-508 is mounted, remove the DSC board/2.
   G.6.13.2 DSC board/2 (for back side) (SC-508)
3. If an optional dual scan document feeder DF-704 is mounted, remove the dual scan board.
   G.6.3.11 Dual scan board (DSIPB) (DF-704)
4. If an optional security kit SC-508 is mounted, remove the DSC board/1.
   G.6.13.1 DSC board/1 (for front side) (SC-508)

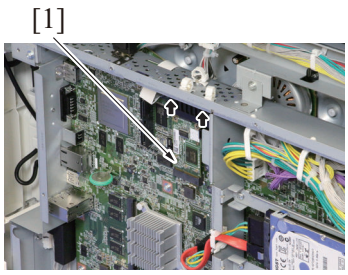


5. Release the lock of the eMMC board [1].
   **NOTE**
   - **Be careful not to drop the eMMC board.**

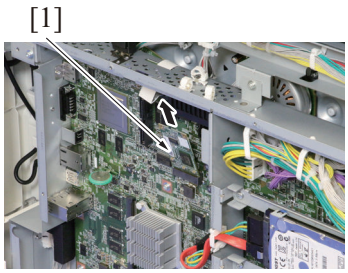


6. Remove the eMMC board [1].
7. To reinstall, reverse the order of removal.

### 5.4.6 Tray 1 FD paper size board (FDPSB/1), tray 2 FD paper size board (FDPSB/2)

**NOTE**

- **The tray 1 FD paper size board and the tray 2 FD paper size board are of the same form and mechanism. This procedure shows the steps taken for the tray 1 FD paper size board.**

1. Remove the tray 1.
   G.5.2.23 Tray 1
2. Remove the tray 2.
   G.5.2.24 Tray 2

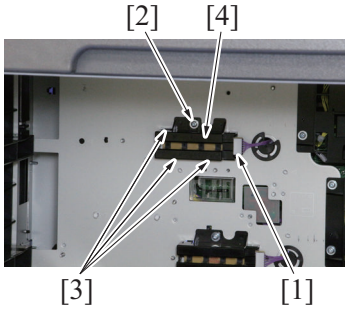


3. Disconnect the connector [1].
4. Remove the screw [2] and three tabs [3], and remove the tray 1 FD paper size board assy [4].

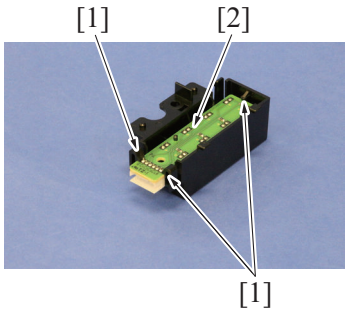


5. Remove three tabs [1], and remove the Tray 1 FD paper size board [2].

6. To reinstall, reverse the order of removal.

### 5.4.7 Front side board (FRB)

1. Remove the front door.
   G.5.2.13 Front door
2. Remove the front lower cover.
   G.5.2.14 Front lower cover
3. Remove the waste toner box.
   F.6.6.1 Replacing the waste toner box
4. Remove the front door.
   G.5.2.13 Front door
5. Remove the front lower cover.
   G.5.2.14 Front lower cover
6. Remove the front cover.
   G.5.2.15 Front cover

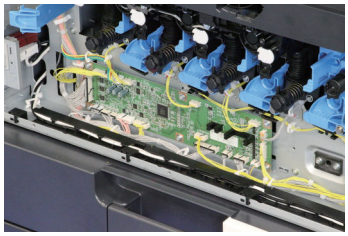

7. Disconnect all connectors on the front side board.

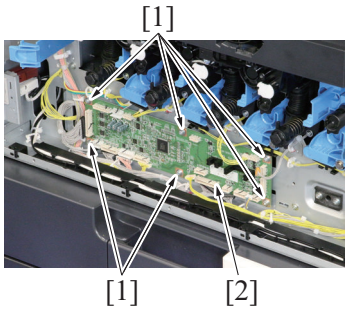


8. Remove six screws [1], and remove the front side board [2].

9. To reinstall, reverse the order of removal.

### 5.4.8 High voltage unit (HV)

1. Remove the lower rear cover.
   G.5.2.20 Lower rear cover
2. Open the PWB box.
   G.5.3.9 How to open the PWB box

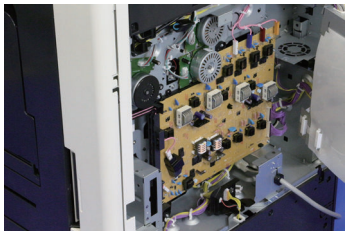

3. Disconnect all connectors and solderless terminals on the high voltage unit.

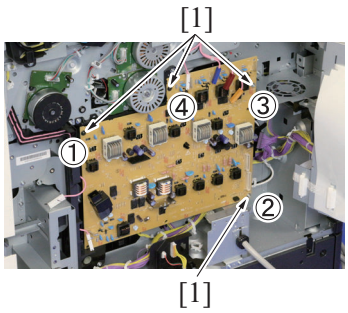


4. Remove four screws [1] of the high voltage unit.
**NOTE**
- **When installing the high voltage unit, tighten the screws in the order shown in the illustration.**

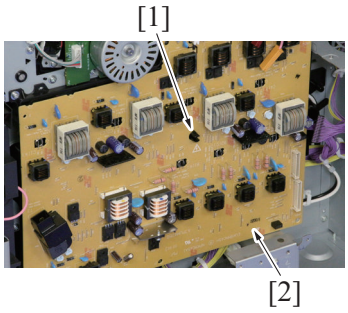


5. Unhook the tab [1], and remove the high voltage unit [2].
**NOTE**
- **When mounting the high voltage unit, the terminal contact point must be contacted without fail. The claw also must be firmly hooked.**

6. To reinstall, reverse the order of removal.

### 5.4.9 Machine condition monitor board (MCMB)

1. Remove the control panel right cover.
G.5.2.8 Control panel right cover

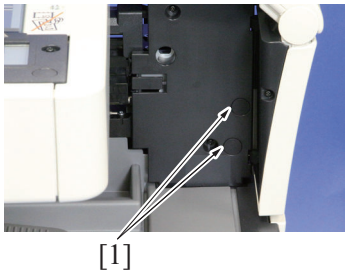


2. Remove two caps [1].

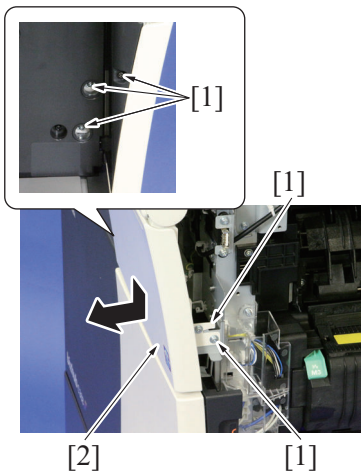


3. Remove five screws [1] from the control panel front cover [2] and remove the cover by releasing the tabs.

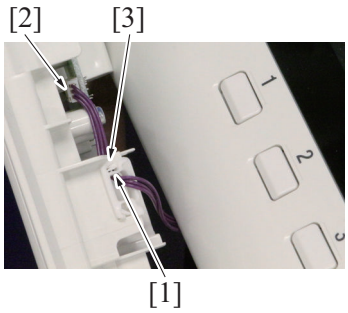


4. Remove the harness from the wire saddle [1].
5. Disconnect connector [2], and remove the control panel front cover assy [3].

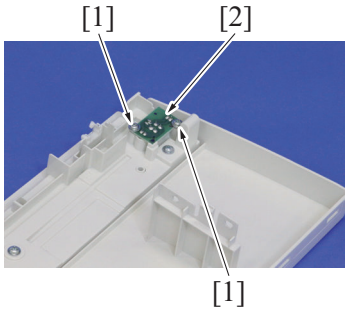


6. Remove two screws [1], and remove the machine condition monitor board [2].

7. To reinstall, reverse the order of removal.

### 5.4.10 MFP board (MFPB)

**NOTE**

- **Never use the combination of the used MFP board removed from another machine and the original eMMC board or EEPROM. This combination causes corruption of stored data.**
  **Note that the combination of the original MFP board and the used eMMC board or EEPROM removed from another machine also causes the same problem.**
- **Do not replace the MFP board and the eMMC board or EEPROM with new ones at the same time.**

1. Remove the lower rear cover.
   G.5.2.20 Lower rear cover
2. Remove the protective sheet.
   G.5.2.21 Protective sheet
3. Remove the hard disk (A).
   G.5.3.8 Hard disk (A)
4. If an optional security kit SC-508 is mounted, remove the DSC board/2.
   G.6.13.2 DSC board/2 (for back side) (SC-508)
5. If an optional dual scan document feeder DF-704 is mounted, remove the dual scan board.
   G.6.3.11 Dual scan board (DSIPB) (DF-704)
6. If an optional security kit SC-508 is mounted, remove the DSC board/1.
   G.6.13.1 DSC board/1 (for front side) (SC-508)
7. If an optional FAX kit FK-514 is mounted, remove the FAX board.
   G.6.17.1 FAX Kit (Line1), FAX Kit (Line2) (FK-511)
8. Remove the optional upgrade kit UK-211 if it is installed.
   G.6.14.1 Upgrade kit (UK-211)
9. Remove the optional hard disk (B) HD-524 if it is installed.
   G.6.18.1 Hard disk (B) (HDD-524)
10. Remove the harness from two wire saddles [1].

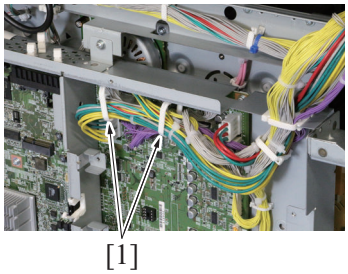

*11.* Remove all connectors and flat cables on the MFP board.

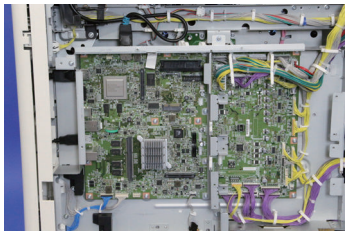

*12.* Remove six screws [1], and remove the plate [2].

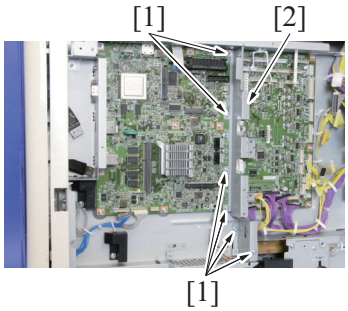


*13.* Remove the screw [1] and two bolts [2] of the MFP board side panel.

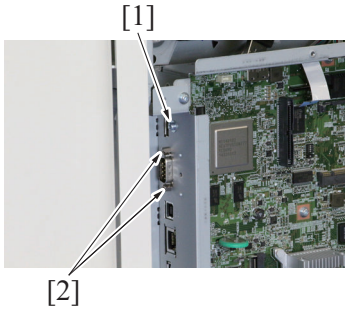


*14.* Remove 10 screws [1], and remove the MFP board [2].

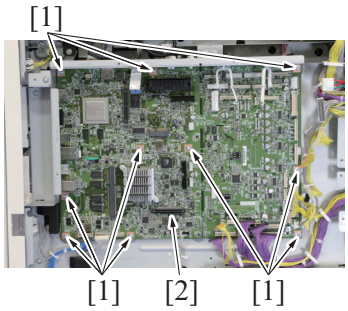


*15.* To reinstall, reverse the order of removal.

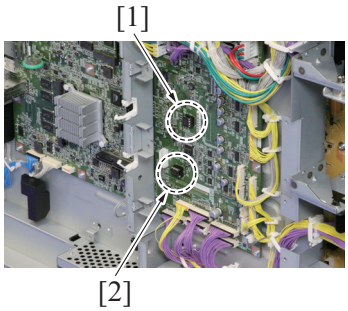


**NOTE**

- **After replacing the MFP board (MFPB), transfer EEPROM/1 and EEPROM/2.**
- **Mark the EEPROMs to before replacing. Mark the EEPROMs to distinguish old from new, and mark EEPROM/1 and EEPROM/2 to distinguish from each other.**
- **Marks should be helpful to making easy distinction regardless of the style of them.**
- **When replacing EEPROM/1 [1], EEPROM/2 [2], replace them one at a time to prevent a mix-up in the device positions.**
- **When mounting EEPROM , align the notches (indicated by "A" in the illustration).**

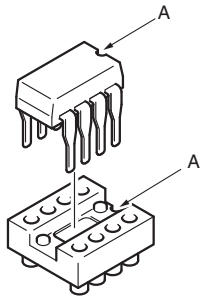


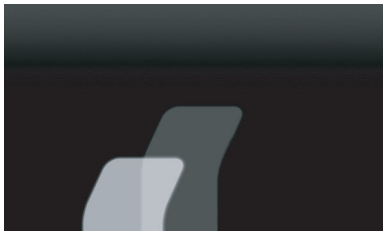

16. After replacing the board, install the firmware and enter the machine type information.
J.2.4 Entering the machine type information
17. Turn OFF the main power switch, and remove the USB memory.
18. Wait 10 seconds, turn ON the main power switch and wait 2 minutes until boot up the machine completely.
19. C-D390 code will appear. (C-D390 is normal operation when replacing the MFPB with a NEW MFPB.)

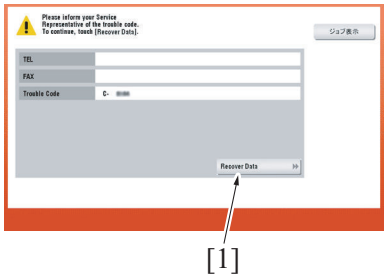


20. Wait until [Recover Data] [1] appears. (MFP will reboot maximum 2 times by itself, it may take 5 minutes.)
21. Touch [Recover Data] and [Yes].
22. Turn OFF the main power switch, wait 10 seconds, then turn ON the main power switch, after “Turn the main switch OFF and ON.” message is appeared.

### 5.4.11 Tray 1 empty indicator board (PEIB/1), tray 2 empty indicator board (PEIB/2)

1. Slide out the tray 1 and the tray 2.
2. Remove two screws [1], and remove the tray right cover [2].

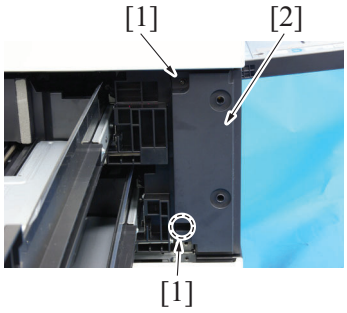


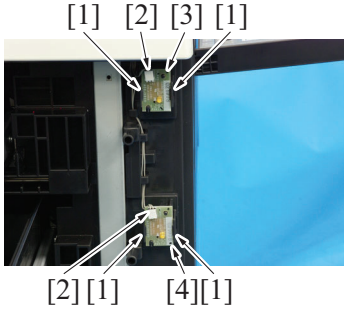


3. Unhook two tabs [1] each. Disconnect the connector [2] each, and remove the tray 1 empty indicator board [3] and the tray 2 empty indicator board [4].
4. To reinstall, reverse the order of removal.

### 5.4.12 PH relay board (PHRYB)

1. Remove the left cover.
   G.5.2.16 Left cover
2. Remove the exit tray.
   G.5.2.17 Exit tray
3. Remove the DC power supply.
   G.5.4.3 DC power supply (DCPU)

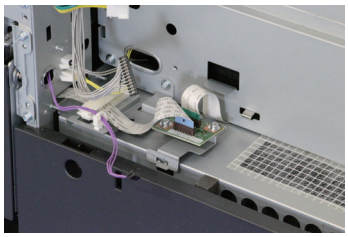

4. Disconnect all flat cables on the PH relay board.

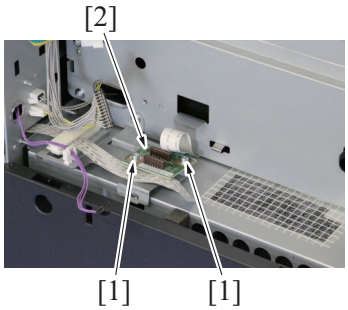


5. Remove two screws [1], and remove the PH relay board [2].

6. To reinstall, reverse the order of removal.

### 5.4.13 Scanner drive board (SCDB)

1. Remove the scanner rear cover.
   G.5.2.1 Scanner rear cover
2. Remove the scanner upper rear cover.
   G.5.2.5 Scanner upper rear cover

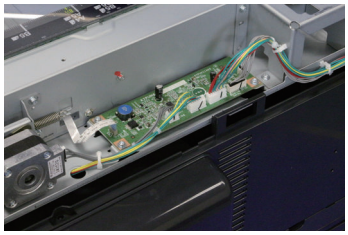

3. Disconnect all connectors on the scanner drive board.

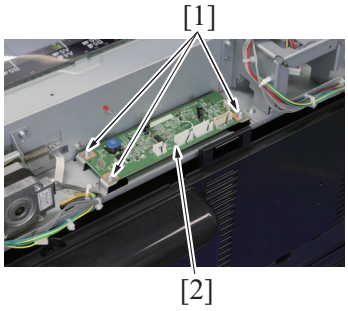


4. Remove three screws [1], and remove the scanner drive board [2].

5. To reinstall, reverse the order of removal.

## 5.5 Disassembly/reassembly procedure (Motors)

### 5.5.1 Transport motor (M1)

1. Remove the lower rear cover.
   G.5.2.20 Lower rear cover
2. Open the PWB box.

G.5.3.9 How to open the PWB box

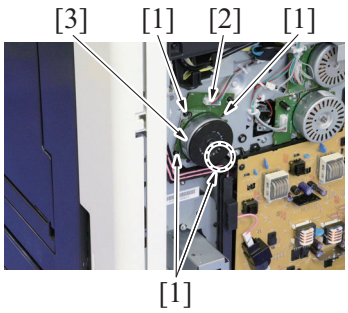


3. Remove four screws [1]. Disconnect the connector [2], and remove the transport motor [3].

4. To reinstall, reverse the order of removal.
**NOTE**
- **When installing the motor, use care not to mistake in the kind of the mounting screws (M3x6mm).**

### 5.5.2 PC motor (M2)

1. Remove the lower rear cover.
G.5.2.20 Lower rear cover
2. Open the PWB box.
G.5.3.9 How to open the PWB box

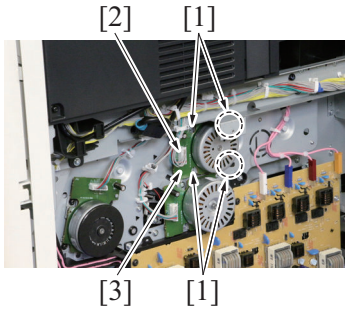


3. Remove four screws [1]. Disconnect the connector [2], and remove the PC motor [3].

4. To reinstall, reverse the order of removal.
**NOTE**
- **When installing the motor, use care not to mistake in the kind of the mounting screws (M3x6mm).**

### 5.5.3 Fusing motor (M3)

1. Remove the lower rear cover.
G.5.2.20 Lower rear cover
2. Remove the scanner rear cover.
G.5.2.1 Scanner rear cover
3. Remove the upper rear cover.
G.5.2.22 Upper rear cover

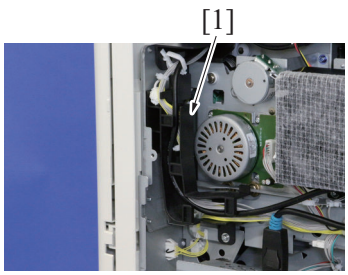


4. Remove the harness from harness guide [1].

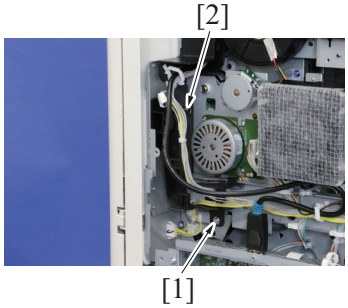


5. Remove the screw [1], and remove the harness guide [2].

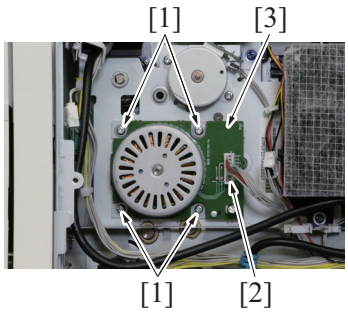


6. Remove four screws [1]. Disconnect the connector [2], and remove the fusing motor [3].

7. To reinstall, reverse the order of removal.

**NOTE**

- **When installing the motor, use care not to mistake in the kind of the mounting screws (M3x6mm).**

### 5.5.4 Reverse motor (M4)

#### (1) Removal procedure

1. Remove the lower rear cover.
   G.5.2.20 Lower rear cover
2. Remove the scanner rear cover.
   G.5.2.1 Scanner rear cover
3. Remove the upper rear cover.
   G.5.2.22 Upper rear cover
4. Remove the rear right cover.
   G.5.2.18 Rear right cover

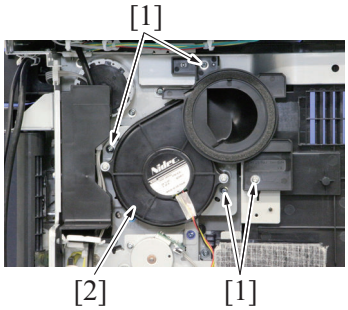


5. Remove four screws [1], and remove the paper cooling fan assy [2].

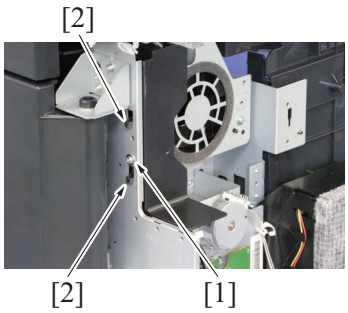


6. Remove the screw [1], and remove two tabs [2].

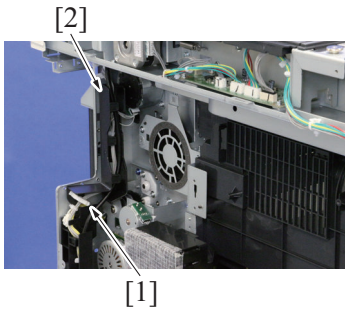


7. Remove the harness from the wire saddle [1].
8. Remove the harness guide [2] as clearing the harness.

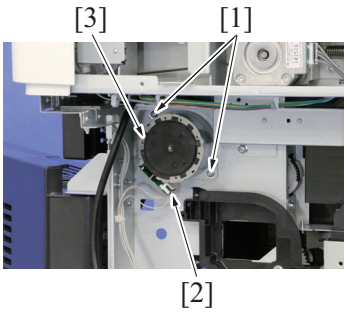


9. Remove two screws [1]. Disconnect the connector [2], and remove the reverse motor [3].

### (2) Reinstall procedure

1. Remove the scanner right cover.
   G.5.2.2 Scanner right cover
2. Remove the upper right cover.
   G.5.2.19 Upper right cover

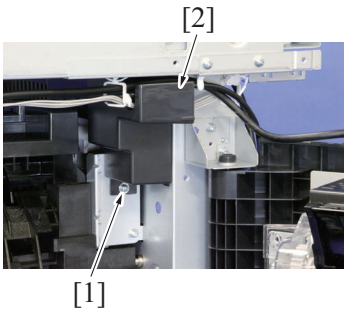


3. Remove the screw [1], and remove the cover [2].

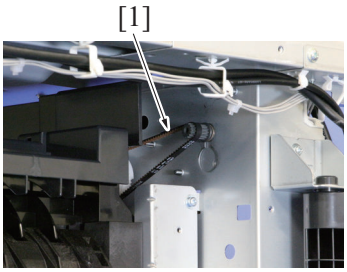


4. Attach the drive belt [1] to the gear of the reverse motor.

5. Attach it in reversed procedures of removal.

## 5.5.5 ADU transport motor (M5)

1. Open the right door.

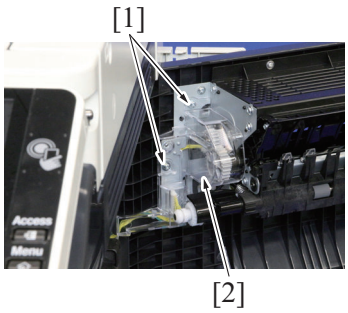


2. Remove two screws [1], and remove the gear cover [2].

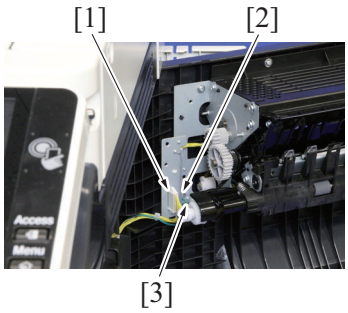


3. Disconnect the connector [1].
4. Remove the screw [2], and remove the ground terminal [3].

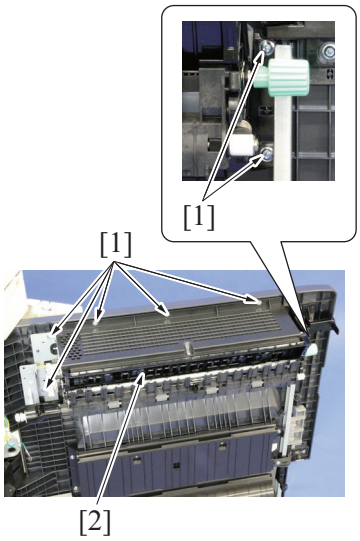


5. Remove seven screws [1], and remove the ADU transport assy [2].

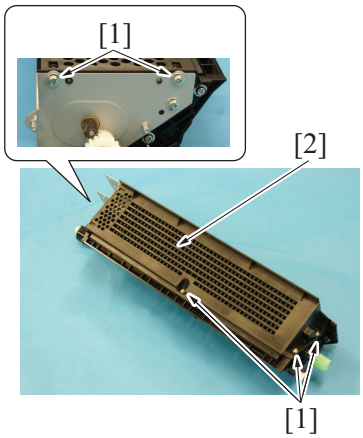


6. Remove five screws [1], and remove the guide [2].

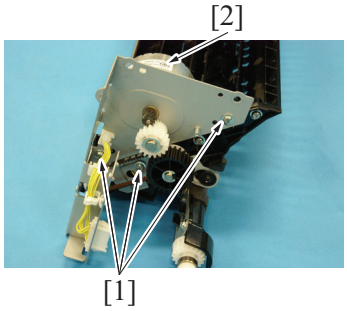


7. Remove three screws [1] to release the ADU transport motor assy [2].

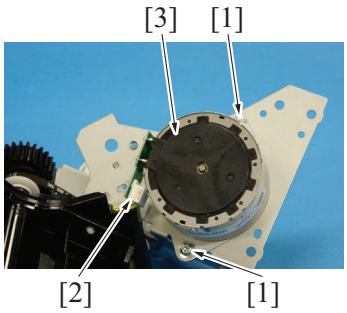


8. Remove two screws [1]. Disconnect the connector [2], and remove the ADU transport motor [3].

9. To reinstall, reverse the order of removal.

### 5.5.6 Toner supply motor/K (M6)

1. Remove the front door.
   G.5.2.13 Front door
2. Remove the front lower cover.
   G.5.2.14 Front lower cover
3. Remove the front cover.
   G.5.2.15 Front cover
4. Remove the toner cartridge/Y,M,C,K.
   F.6.3.1 Replacing the toner cartridge
5. Remove the drum unit/Y,M,C,K.
   F.6.1.1 Replacing the drum unit
6. Remove the developing unit/Y,M,C,K.
   F.6.2.1 Replacing the developing unit
7. Remove the left cover.
   G.5.2.16 Left cover
8. Remove the exit tray.
   G.5.2.17 Exit tray
9. Remove the sub hopper unit.
   G.5.3.4 Sub hopper unit

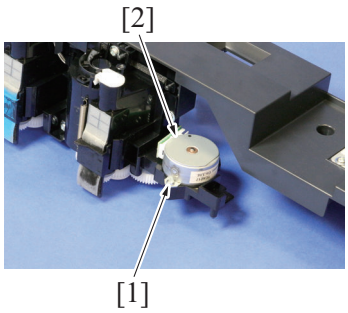


10. Remove the screw [1], and remove the toner supply motor/K [2].

11. To reinstall, reverse the order of removal.

### 5.5.7 Toner supply motor/C (M7)

1. Remove the lower rear cover.
   G.5.2.20 Lower rear cover
2. Remove the scanner rear cover.
   G.5.2.1 Scanner rear cover
3. Remove the upper rear cover.
   G.5.2.22 Upper rear cover

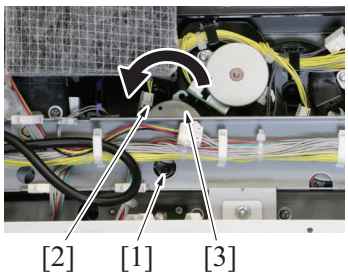


4. Remove the screw [1]. Disconnect the connector [2], and remove the toner supply motor/C [3].
   **NOTE**
   - **When removing the toner supply motor/C [3], make sure to turn it in the direction shown in the illustration.**

5. To reinstall, reverse the order of removal.

### 5.5.8 Toner supply motor/M (M8)

1. Remove the lower rear cover.
   G.5.2.20 Lower rear cover

2. Remove the scanner rear cover.
   G.5.2.1 Scanner rear cover
3. Remove the upper rear cover.
   G.5.2.22 Upper rear cover

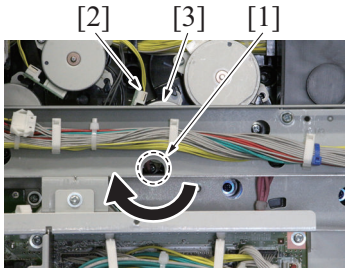


4. Remove the screw [1]. Disconnect the connector [2], and remove the toner supply motor/M [3].
   **NOTE**
   - **When removing the toner supply motor/M [3], make sure to turn it in the direction shown in the illustration.**

5. To reinstall, reverse the order of removal.

### 5.5.9 Toner supply motor/Y (M9)

1. Remove the lower rear cover.
   G.5.2.20 Lower rear cover
2. Remove the scanner rear cover.
   G.5.2.1 Scanner rear cover
3. Remove the upper rear cover.
   G.5.2.22 Upper rear cover

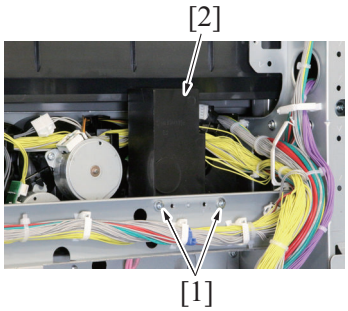


4. Remove two screws [1], and remove the cover [2].

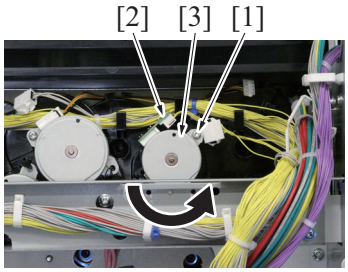


5. Remove the screw [1]. Disconnect the connector [2], and remove the toner supply motor/Y [3].
   **NOTE**
   - **When removing the toner supply motor/Y [3], make sure to turn it in the direction shown in the illustration.**

6. To reinstall, reverse the order of removal.

### 5.5.10 Toner cartridge motor/Y,M,C (M10)

1. Remove the lower rear cover.
   G.5.2.20 Lower rear cover
2. Remove the scanner rear cover.
   G.5.2.1 Scanner rear cover
3. Remove the upper rear cover.
   G.5.2.22 Upper rear cover

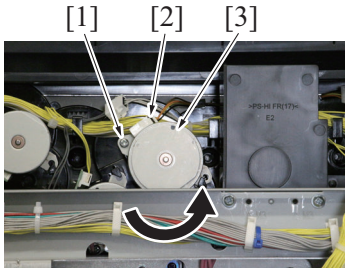


4. Remove the screw [1]. Disconnect the connector [2], and remove the toner cartridge motor/Y,M,C [3].
   **NOTE**
   - **When removing the toner cartridge motor/Y,M,C [3], make sure to turn it in the direction shown in the illustration.**

5. To reinstall, reverse the order of removal.

### 5.5.11 Fusing pressure motor (M11)

1. Remove the lower rear cover.
   G.5.2.20 Lower rear cover
2. Remove the scanner rear cover.
   G.5.2.1 Scanner rear cover
3. Remove the upper rear cover.
   G.5.2.22 Upper rear cover

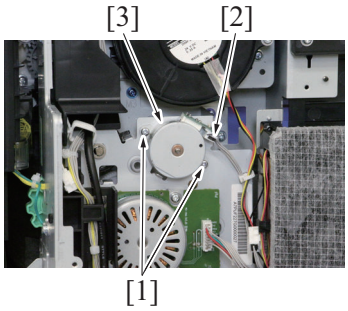


4. Remove two screws [1]. Disconnect the connector [2], and remove the fusing pressure motor [3].

5. To reinstall, reverse the order of removal.

### 5.5.12 Tray 1 lift-up motor (M12)

1. Remove the lower rear cover.
   G.5.2.20 Lower rear cover
2. How to open the PWB box
   G.5.3.9 How to open the PWB box
3. Remove the high voltage unit.
   G.5.4.8 High voltage unit (HV)
4. Slide out the tray 1.

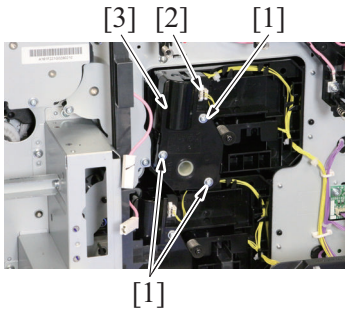


5. Remove three screws [1]. Disconnect the connector [2], and remove the tray 1 lift-up motor [3].

6. To reinstall, reverse the order of removal.

### 5.5.13 Tray 2 lift-up motor (M13)

1. Remove the lower rear cover.
   G.5.2.20 Lower rear cover
2. How to open the PWB box
   G.5.3.9 How to open the PWB box
3. Remove the high voltage unit.
   G.5.4.8 High voltage unit (HV)
4. Slide out the tray 2.

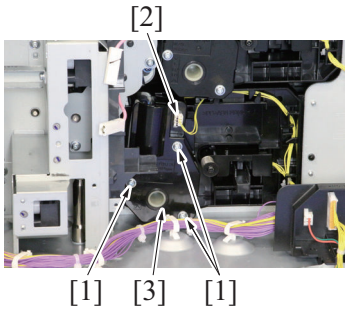


5. Remove three screws [1]. Disconnect the connector [2], and remove the tray 2 lift-up motor [3].

6. To reinstall, reverse the order of removal.

### 5.5.14 Developing motor (M21)

1. Remove the lower rear cover.
   G.5.2.20 Lower rear cover

2. Open the PWB box.
   G.5.3.9 How to open the PWB box

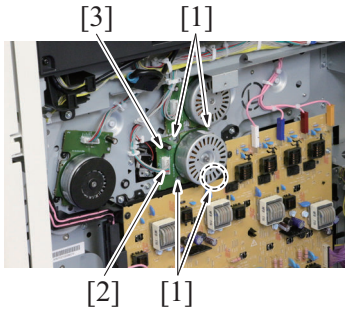


3. Remove four screws [1]. Disconnect the connector [2], and remove the developing motor [3].

4. To reinstall, reverse the order of removal.
   **NOTE**
   - **When installing the motor, use care not to mistake in the kind of the mounting screws (M3x6mm).**

### 5.5.15 Toner cartridge motor/K (M25)

1. Remove the lower rear cover.
   G.5.2.20 Lower rear cover
2. Remove the scanner rear cover.
   G.5.2.1 Scanner rear cover
3. Remove the upper rear cover.
   G.5.2.22 Upper rear cover

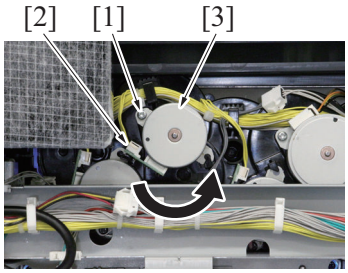


4. Remove the screw [1]. Disconnect the connector [2], and remove the toner cartridge motor/K [3].
   **NOTE**
   - **When removing the toner cartridge motor/K [3], make sure to turn it in the direction shown in the illustration.**

5. To reinstall, reverse the order of removal.

### 5.5.16 Scanner motor (M201)

#### (1) Removal procedure

1. Remove the scanner rear cover.
   G.5.2.1 Scanner rear cover
2. Remove the scanner right cover.
   G.5.2.2 Scanner right cover
3. Remove the scanner upper rear cover.
   G.5.2.5 Scanner upper rear cover

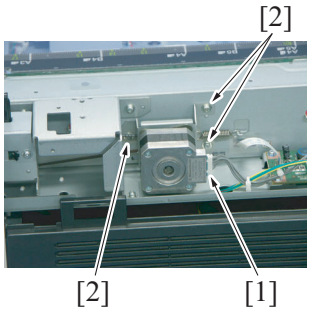


4. Disconnect the connector [1], and remove three screws [2].

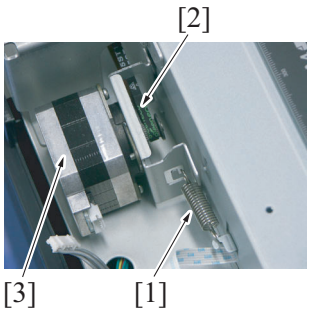


5. Remove the spring [1] and the belt [2], and remove the scanner motor assy [3].

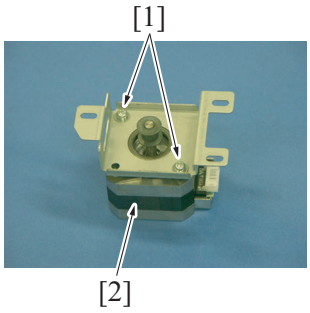


6. Remove two screws [1], and remove the scanner motor [2].

### (2) Reinstall procedure

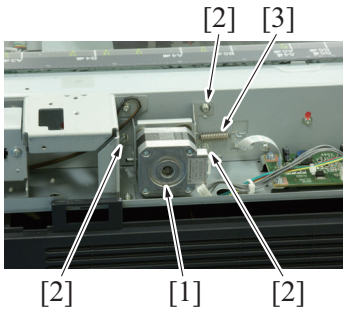


1. Attach the spring [3] to the scanner motor assy [1].
2. Temporarily secure the scanner motor assy [1] with three screws [2].
   **NOTE**
   - **The screws [2] should be temporarily tightened to a degree that the position of the motor can be adjusted by the spring force.**
   - **When installing the scanner motor, make sure that the scanner motor is disconnected with the connector.**

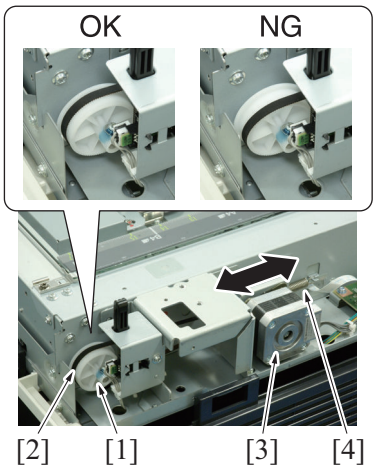


3. Attach the drive belt [2] to the pulley [1] and the gear of scanner motor.
4. Move the scanner motor assy [3] in the direction shown in the illustration for two to three times, then make sure that it runs smoothly.
   **NOTE**
   - **Make sure that the drive belt [2] is properly kept tight by the spring [4] force.**
   - **If the deflection or tension of the drive belt [2] is excessive, the scanner unit does not work correctly. This may result in trouble.**
   - **Make sure that the drive belt [2] is attached to the pulley [1] correctly.**

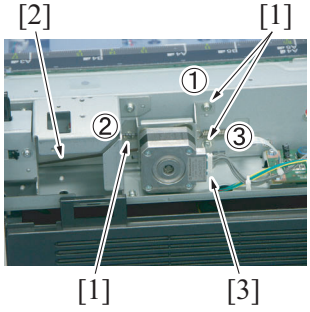


5. Tighten three screws [1] in the order shown in the illustration to fix the scanner motor assy.
   **NOTE**
   - **When tightening the screw [1], make sure that the scanner motor assy is not touched.**
   - **After securing the scanner motor assy, check again that the deflection and tension of the drive belt [2] are not excessive.**
6. Connect the connector [3] to the scanner motor.

7. Carry out the [Service Mode] -> [Machine] -> [Scan Area] -> [Main Scan Zoom Adj.].

## 5.6 Disassembly/reassembly procedure (Clutches)

### 5.6.1 Tray 2 paper feed clutch (CL1)

1. Remove the paper feed unit.
   G.5.3.2 Paper feed unit

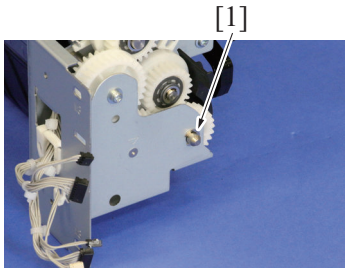


2. Remove the E-ring [1].

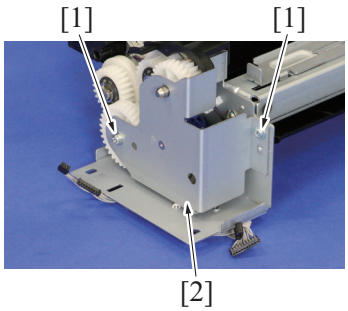


3. Remove two screws [1], and remove the gear cover [2].

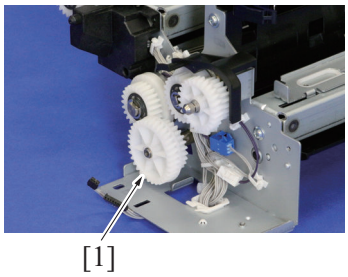


4. Remove the gear [1].

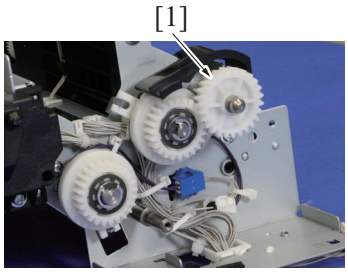


5. Remove the gear [1].

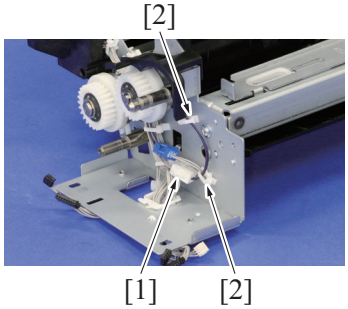


6. Disconnect the connector [1], and remove the harness from two wire saddles [2].

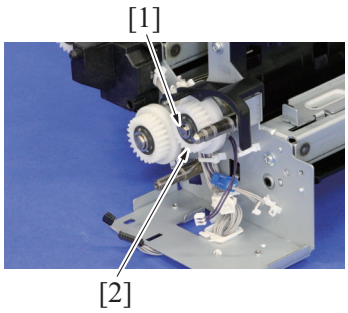


7. Remove the E-ring [1], and remove the tray 2 paper feed clutch [2].
**NOTE**
- **When mounting the tray 2 paper feed clutch [2], set the convex part of the stopper into the concave part of the tray 2 paper feed clutch.**

8. To reinstall, reverse the order of removal.

### 5.6.2 Tray 2 vertical transport clutch (CL2)

1. Remove the paper feed unit.
G.5.3.2 Paper feed unit

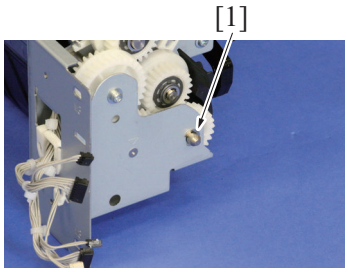


2. Remove the E-ring [1].

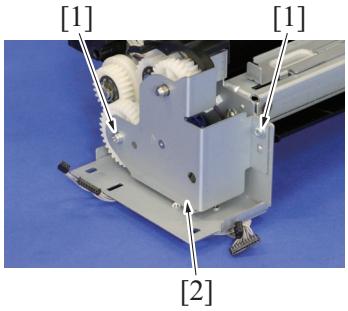


3. Remove two screws [1], and remove the gear cover [2].

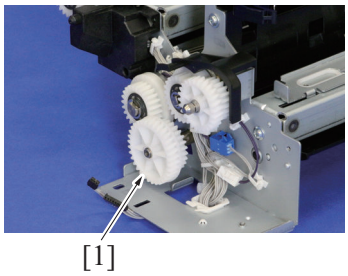


4. Remove the gear [1].

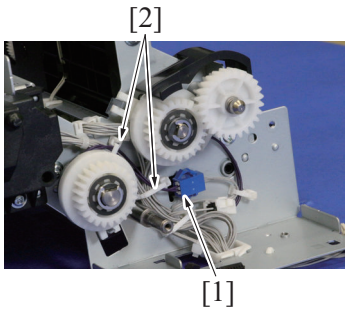


5. Disconnect the connector [1], and remove the harness from two wire saddles [2].

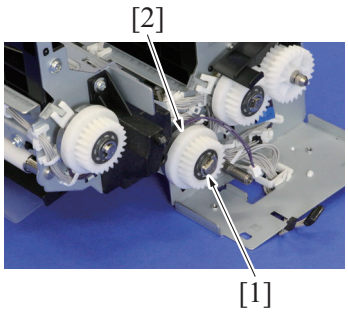


6. Remove the E-ring [1], and remove the tray 2 vertical transport clutch [2].
**NOTE**
- **When mounting the tray 2 vertical transport clutch [2], set the convex part of the stopper into the concave part of the tray 2 vertical transport clutch.**

7. To reinstall, reverse the order of removal.

### 5.6.3 Tray 1 paper feed clutch (CL3)

1. Remove the paper feed unit.
G.5.3.2 Paper feed unit

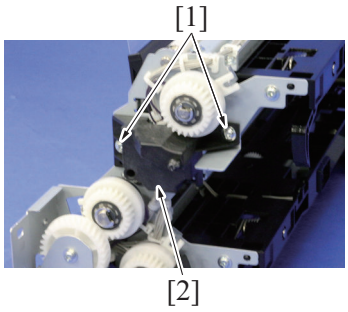


2. Remove two screws [1], and remove the cover [2].

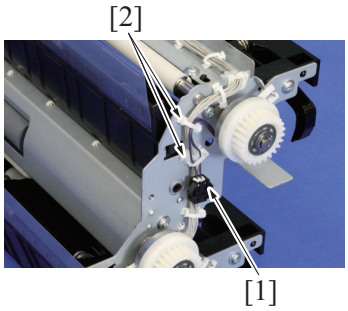


3. Disconnect the connector [1], and remove the harness from two wire saddles [2].

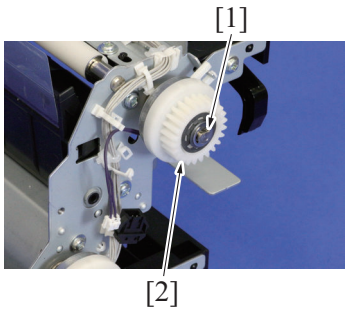


4. Remove the E-ring [1], and remove the tray 1 paper feed clutch [2].
**NOTE**
- **When mounting the tray 1 paper feed clutch [2], set the convex part of the stopper into the concave part of the tray 1 paper feed clutch.**

5. To reinstall, reverse the order of removal.

### 5.6.4 Registration clutch (CL4)

1. Remove the waste toner box.
F.6.6.1 Replacing the waste toner box
2. Remove the transfer belt unit.
F.6.4.3 Replacing the transfer belt unit
3. Remove the front door.
G.5.2.13 Front door
4. Remove the front lower cover.
G.5.2.14 Front lower cover
5. Remove the front cover.
G.5.2.15 Front cover
6. Remove the transport unit.
G.5.3.11 Transport unit

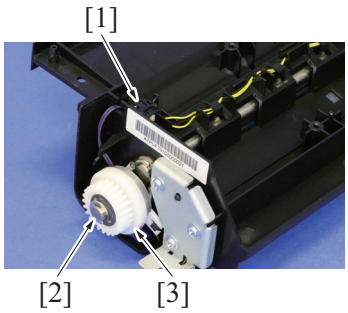


8. To reinstall, reverse the order of removal.

### 5.6.5 1st transfer pressure clutch (CL5)

1. Remove the fusing unit.
   F.6.9.1 Replacing the fusing unit
2. Remove the rear right cover.
   G.5.2.18 Rear right cover
3. Remove the lower rear cover.
   G.5.2.20 Lower rear cover
4. Remove the scanner rear cover.
   G.5.2.1 Scanner rear cover
5. Remove the upper rear cover.
   G.5.2.22 Upper rear cover
6. Open the PWB box.
   G.5.3.9 How to open the PWB box
7. Remove the toner cartridge cooling fan.
   G.5.7.4 Toner cartridge cooling fan (FM4)
8. Remove the fusing motor.
   G.5.5.3 Fusing motor (M3)
9. Remove the fusing pressure motor.
   G.5.5.11 Fusing pressure motor (M11)
10. Remove the fusing pressure motor.
    G.5.5.11 Fusing pressure motor (M11)
11. Remove the transport motor.
    G.5.5.1 Transport motor (M1)
12. Remove the PC motor.
    G.5.5.2 PC motor (M2)
13. Remove the developing motor.
    G.5.5.14 Developing motor (M21)
14. Remove the fusing drive unit.
    G.5.3.12 Fusing drive unit

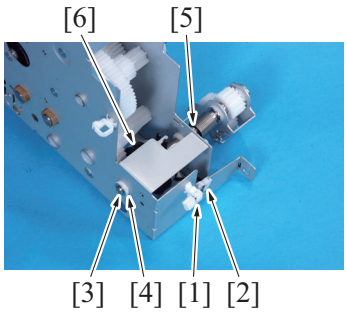


17. To reinstall, reverse the order of removal.

### 5.6.6 ADU transport clutch (CL6)

1. Remove the lower rear cover.
   G.5.2.20 Lower rear cover
2. Remove the scanner rear cover.
   G.5.2.1 Scanner rear cover
3. Remove the upper rear cover.
   G.5.2.22 Upper rear cover
4. Remove the rear right cover.
   G.5.2.18 Rear right cover
5. Open the PWB box.
   G.5.3.9 How to open the PWB box
6. Remove the high voltage unit.
   G.5.4.8 High voltage unit (HV)
7. Remove the transport motor.
   G.5.5.1 Transport motor (M1)
8. Remove the PC motor.

7. Remove the E-ring [2]. Disconnect the connector [1], and remove the registration clutch [3].
   **NOTE**
   - **When mounting the registration clutch, set the convex part of the stopper into the concave part of the registration clutch [3].**

15. Remove the harness from the wire saddle [1] and the edge cover [2].
16. Remove the E-ring [3] and the bushing [4], and remove the 1st transfer pressure clutch [6] while pulling out the shaft [5].
    **NOTE**
    - **When mounting the 1st transfer pressure clutch [6], set the convex part of the stopper into the concave part of the 1st transfer pressure clutch.**

G.5.5.2 PC motor (M2)

9. Remove the developing motor.
G.5.5.14 Developing motor (M21)

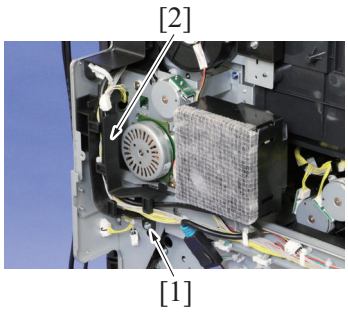


10. Remove the screw [1].
11. Remove the harness guide [2] as clearing the harness.

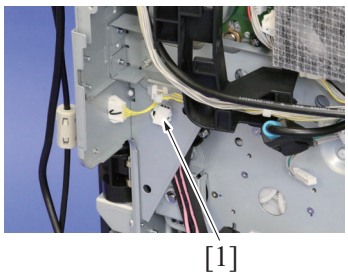


12. Disconnect the connector [1].

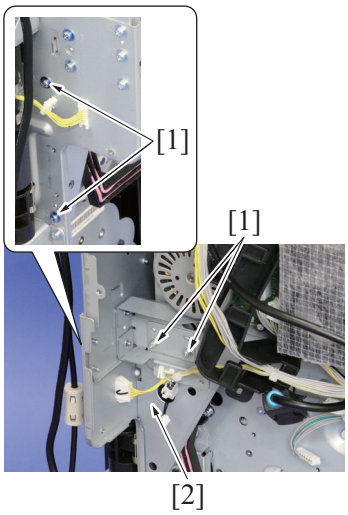


13. Remove four screws [1], and remove the metal plate [2].

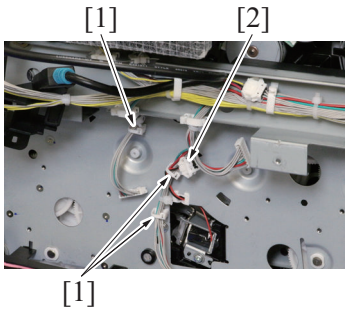


14. Remove the harness from the three wire saddles [1].
15. Disconnect the connector [2].

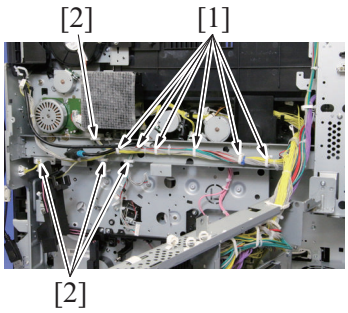


16. Remove the harness from six wire saddles [1] and four edge covers [2].

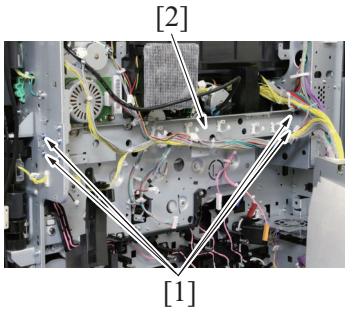


17. Remove four screws [1].
18. Remove the reinforcing plate [2] as clearing the harness.

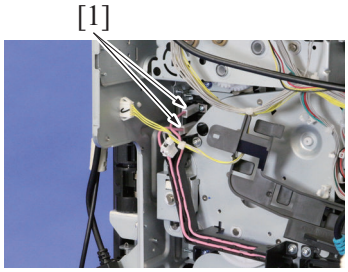


19. Remove two solderless terminals [1].

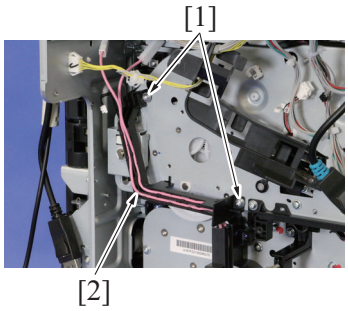


20. Remove two screws [1], and remove the harness guide [2].

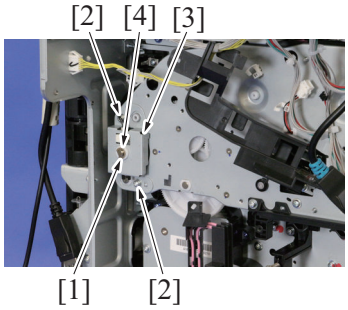


21. Remove the E-ring [1].
22. Remove two screws [2], and remove the metal plate [3] and bushing [4].

23. Remove the ADU transport clutch [1].

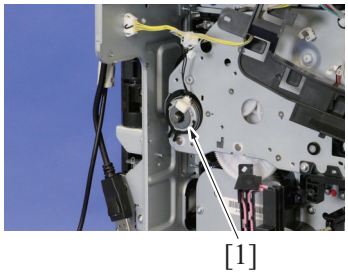


24. To reinstall, reverse the order of removal.

### 5.6.7 Bypass paper feed clutch (CL7)

1. Open the right door.
2. Remove the screw [1], and remove the connector cover [2].

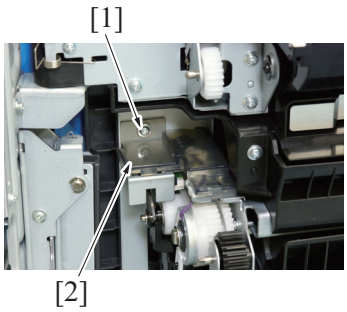


3. Disconnect the connector [1], and remove the harness from two wire saddles [2] and the edge cover [3].

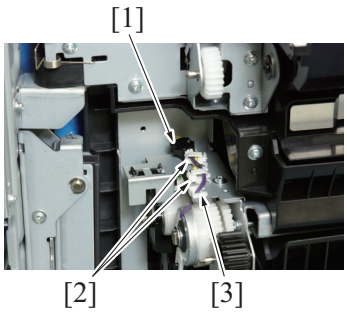


4. Remove the E-ring [1], and remove the bypass paper feed clutch [2].
   **NOTE**
   - **When mounting the bypass paper feed clutch, set the convex part of the stopper into the concave part of the bypass paper feed clutch [2].**

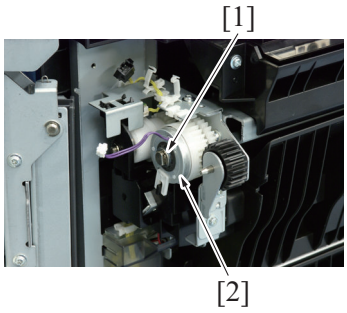


5. To reinstall, reverse the order of removal.

### 5.6.8 Paper exit clutch (CL8)

1. Remove the fusing unit.
   F.6.9.1 Replacing the fusing unit
2. Remove the rear right cover.
   G.5.2.18 Rear right cover
3. Remove the lower rear cover.
   G.5.2.20 Lower rear cover
4. Remove the scanner rear cover.
   G.5.2.1 Scanner rear cover
5. Remove the upper rear cover.
   G.5.2.22 Upper rear cover
6. Open the PWB box.
   G.5.3.9 How to open the PWB box
7. Remove the toner cartridge cooling fan.
   G.5.7.4 Toner cartridge cooling fan (FM4)
8. Remove the fusing motor.

G.5.5.3 Fusing motor (M3)

9. Remove the fusing pressure motor.
   G.5.5.11 Fusing pressure motor (M11)
10. Remove the fusing pressure motor.
    G.5.5.11 Fusing pressure motor (M11)
11. Remove the transport motor.
    G.5.5.1 Transport motor (M1)
12. Remove the PC motor.
    G.5.5.2 PC motor (M2)
13. Remove the developing motor.
    G.5.5.14 Developing motor (M21)
14. Remove the fusing drive unit.
    G.5.3.12 Fusing drive unit

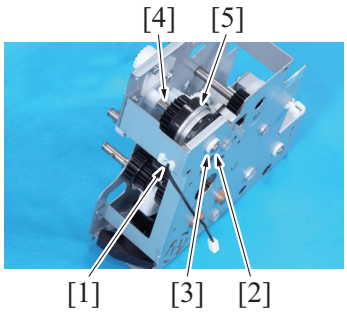


15. Remove the harness from the edge cover [1].
16. Remove the E-ring [2] and the bushing [3], and remove the paper exit clutch [5] while pulling out the shaft [4].
    **NOTE**
    - **When mounting the paper exit clutch, set the convex part of the stopper into the concave part of the paper exit clutch [5].**

17. To reinstall, reverse the order of removal.

## 5.7 Disassembly/reassembly procedure (Fans)

### 5.7.1 Power supply cooling fan (FM1)

1. Remove the left cover.
   G.5.2.16 Left cover
2. Remove the exit tray.
   G.5.2.17 Exit tray

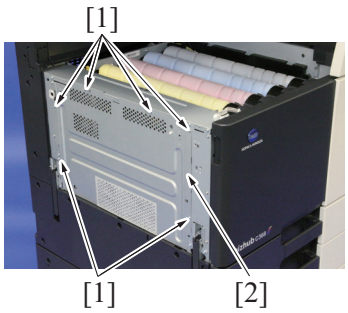


3. Remove six screws [1], and remove the DC power supply protective shield [2].

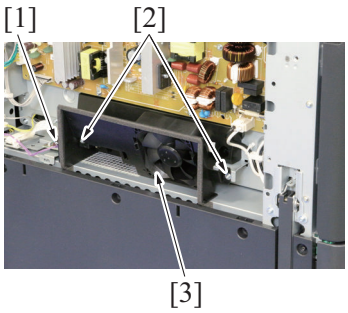


4. Disconnect the connector [1].
5. Remove two screws [2], and remove the power supply cooling fan assy [3].

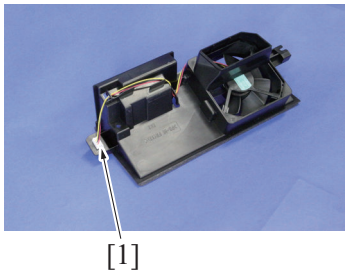


6. Disconnect the connector [1], and remove the harness from the harness guide.

7. Remove two tabs [1], and remove the power supply cooling fan [2].

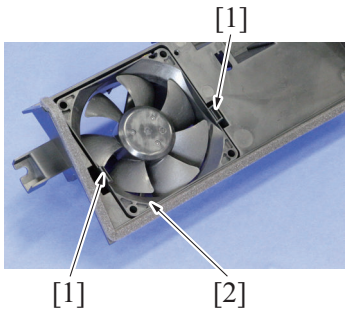


8. To reinstall, reverse the order of removal.

### 5.7.2 Transfer belt cleaner cooling fan (FM2)

1. Remove the front door.
   G.5.2.13 Front door
2. Remove the front lower cover.
   G.5.2.14 Front lower cover
3. Remove the front cover.
   G.5.2.15 Front cover
4. Remove the left cover.
   G.5.2.16 Left cover
5. Remove the exit tray.
   G.5.2.17 Exit tray
6. Remove the DC power supply.
   G.5.4.3 DC power supply (DCPU)
7. Remove the transfer belt unit.
   F.6.4.3 Replacing the transfer belt unit
8. Remove the toner cartridge/Y,M,C,K.
   F.6.3.1 Replacing the toner cartridge
9. Remove the waste toner box.
   F.6.6.1 Replacing the waste toner box
10. Remove the drum unit/Y,M,C,K.
    F.6.1.1 Replacing the drum unit
11. Remove the developing unit.
    F.6.2.1 Replacing the developing unit
12. Remove the sub hopper unit.
    G.5.3.4 Sub hopper unit

13. Remove the screw [1], and remove the harness guide [2].

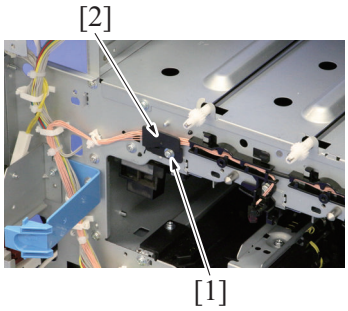


14. Remove the rail [1].

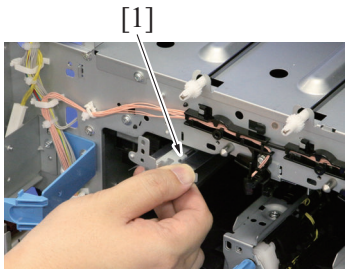

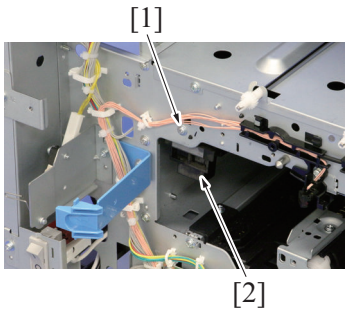


*15.* Remove the screw [1], and remove the waste toner pipe [2].

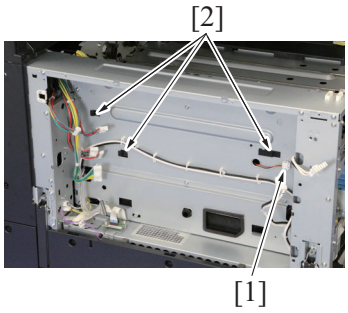


*16.* Unclip the connector [1] and three connector tabs [2], and remove the transfer belt cleaner cooling fan assy.

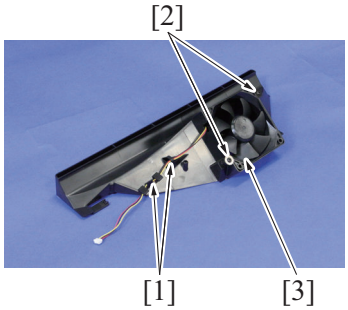


*17.* Remove the harness from harness guide [1].
*18.* Remove two screws [2], and remove the transfer belt cleaner cooling fan [3].

*19.* To reinstall, reverse the order of removal.

### 5.7.3 Machine rear side cooling fan (FM3)

*1.* Remove the lower rear cover.
G.5.2.20 Lower rear cover
*2.* Open the PWB box.
G.5.3.9 How to open the PWB box

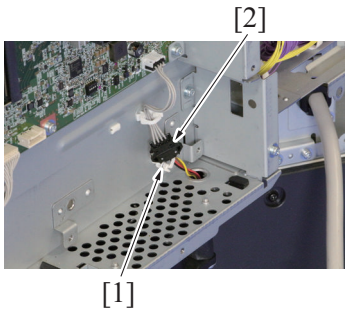


*3.* Remove the harness from the wire saddle [1], and disconnect the connector [2].

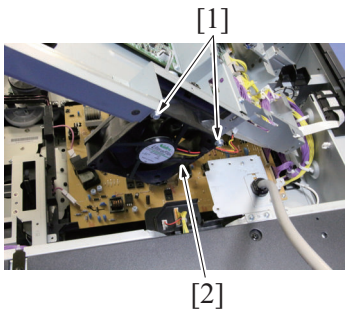


*4.* Remove two screws [1], and remove the rear side cooling fan [2].

5. To reinstall, reverse the order of removal.

### 5.7.4 Toner cartridge cooling fan (FM4)

1. Remove the lower rear cover.
   G.5.2.20 Lower rear cover
2. Remove the scanner rear cover.
   G.5.2.1 Scanner rear cover
3. Remove the upper rear cover.
   G.5.2.22 Upper rear cover

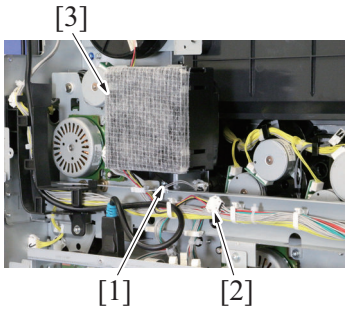


4. Remove the screw [1]. Disconnect the connector [2], and remove the toner cartridge cooling fan [3].

5. To reinstall, reverse the order of removal.

### 5.7.5 Paper cooling fan (FM8)

1. Remove the lower rear cover.
   G.5.2.20 Lower rear cover
2. Remove the scanner rear cover.
   G.5.2.1 Scanner rear cover
3. Remove the upper rear cover.
   G.5.2.22 Upper rear cover

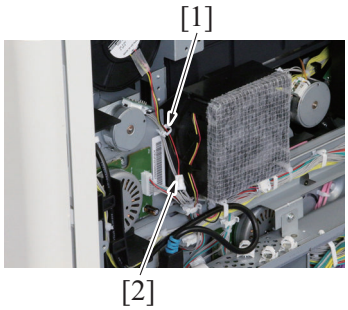


4. Remove the harness from the wire saddle [1], and disconnect the connector [2].

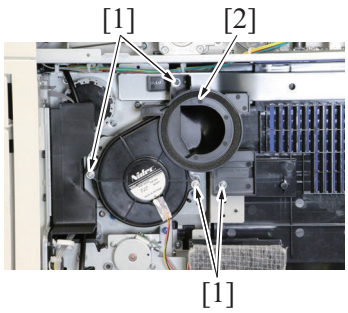


5. Remove four screws [1], and remove the paper cooling fan assy [2].

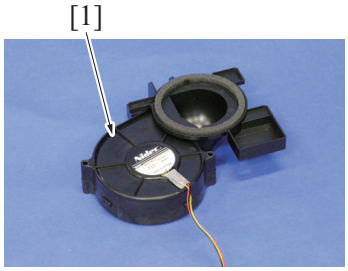


6. Remove the paper cooling fan [1].

7. To reinstall, reverse the order of removal.

## 5.8 Disassembly/reassembly procedure (etc.)

### 5.8.1 Bypass pick-up solenoid (SD1)

1. Remove the manual bypass tray unit.
G.5.3.6 Manual bypass tray unit

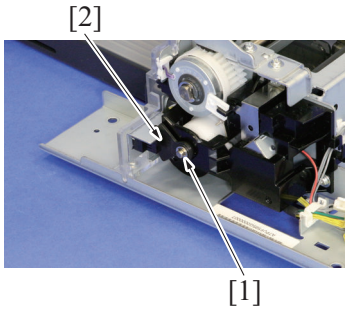


2. Remove the E-ring [1], and remove the actuator [2].

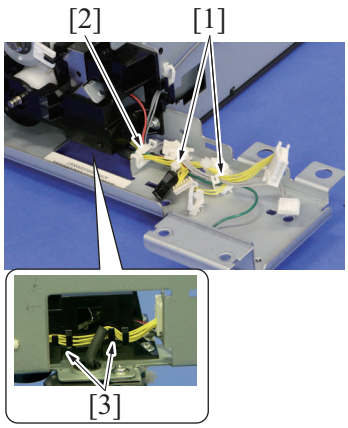


3. Remove the harness from two wire saddles [1] and the edge cover [2].
4. Remove the harness from two harness guides [3].

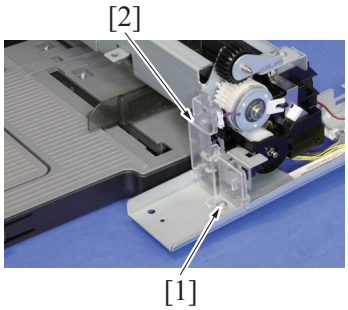


5. Remove the screw [1], and remove the connector cover [2].

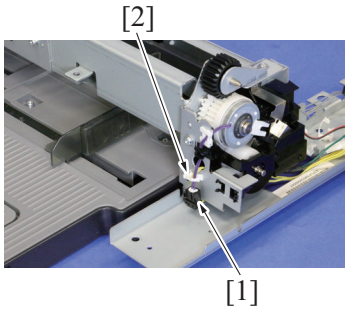


6. Disconnect the connector [1], and remove the harness from the wire saddle [2].

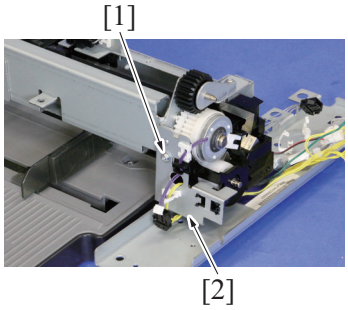


7. Remove the screw [1], and remove the metal plate [2] as clearing the harness.

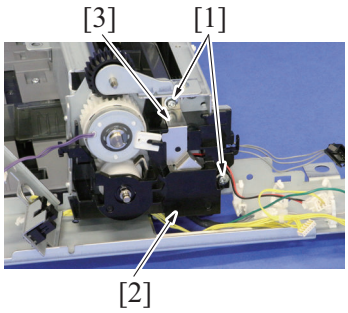


8. Remove two screws [1], and remove the solenoid cover [2] and the earth plate [3].

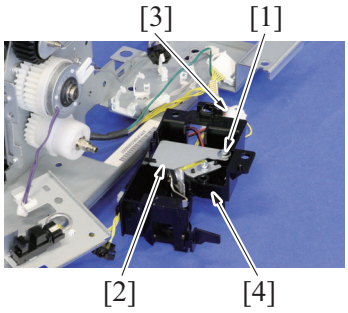


9. Remove the screw [1], and remove the cover [2].
10. Disconnect the connector [3], and remove the bypass pick-up solenoid assy [4].

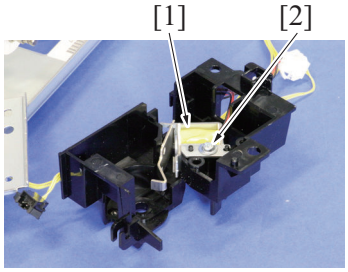


11. Remove the screw [1], and remove the bypass pick-up solenoid [2].

12. To reinstall, reverse the order of removal.

### 5.8.2 IDC sensor shutter solenoid (SD2)

1. Remove the waste toner box.
   F.6.6.1 Replacing the waste toner box
2. Remove the transfer belt unit.
   F.6.4.3 Replacing the transfer belt unit
3. Remove the front door.
   G.5.2.13 Front door
4. Remove the front lower cover.
   G.5.2.14 Front lower cover
5. Remove the front cover.
   G.5.2.15 Front cover
6. Remove the transport unit.
   G.5.3.11 Transport unit

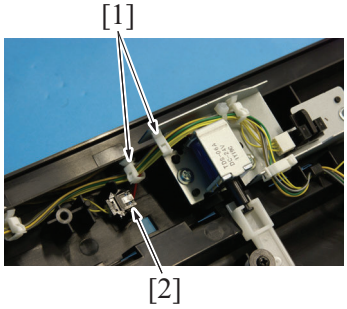


7. Remove the harness from two wire saddles [1], and disconnect the connector [2].

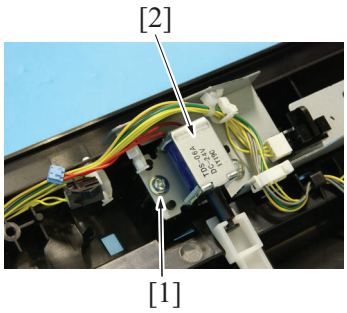


8. Remove the screw [1], and remove the IDC sensor shutter solenoid [2].

9. To reinstall, reverse the order of removal.

### 5.8.3 Gate switch solenoid (SD3)

1. Remove the fusing unit.
   F.6.9.1 Replacing the fusing unit
2. Remove the control panel left cover/1.
   G.5.2.6 Control panel left cover/1
3. Remove the control panel right cover.
   G.5.2.8 Control panel right cover
4. Remove the control panel front cover.
   G.5.2.10 Control panel front cover
5. Remove the scanner right cover.
   G.5.2.2 Scanner right cover
6. Remove the upper right cover.
   G.5.2.19 Upper right cover
7. Open the right door and the regist unit.

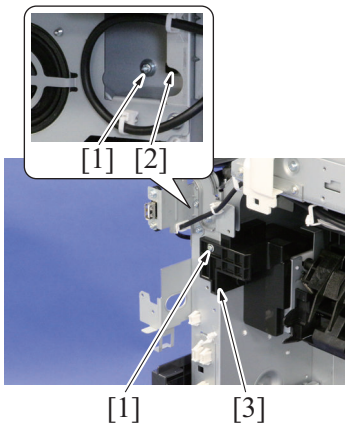


8. Remove two screws [1] and the tab [2], and remove the cover [3].

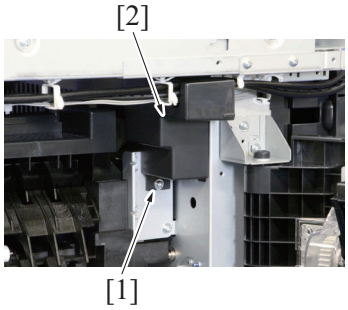


9. Remove the screw [1], and remove the cover [2].

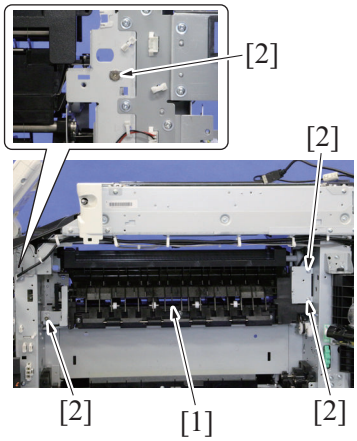


*10.* Remove four screws [2] of the gate switch unit [1].

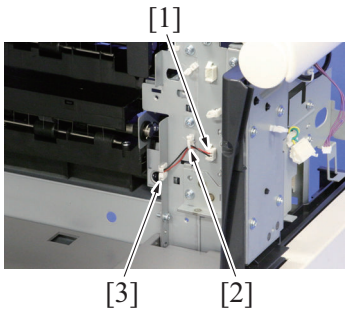


*11.* Disconnect the connector [1].
*12.* Remove the harness from the wire saddle [2] and the edge cover [3].

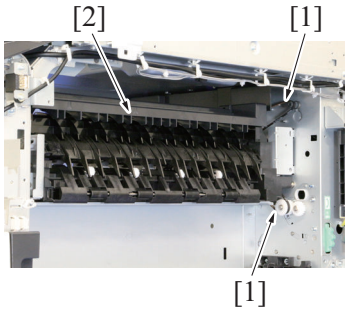


*13.* Remove the gate switch unit [2] as clearing two belts [1].

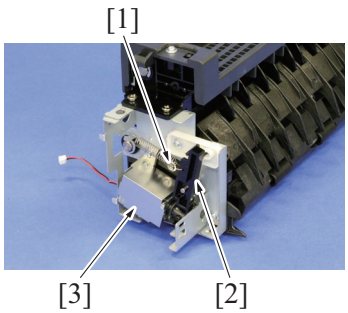


*14.* Remove the screw [1].
*15.* Remove the gate switch solenoid [3] as clearing the actuator [2].

*16.* To reinstall, reverse the order of removal.

### 5.8.4 Developing solenoid (SD4)

1. Remove the lower rear cover.
   G.5.2.20 Lower rear cover
2. How to open the PWB box
   G.5.3.9 How to open the PWB box
3. Remove the developing motor.
   G.5.5.14 Developing motor (M21)

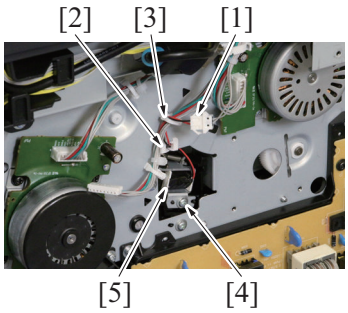


4. Disconnect the connector [1], and remove the harness from the edge cover [2] and the wire saddle [3].
5. Remove the screw [4], and remove the developing solenoid [5].

6. To reinstall, reverse the order of removal.

### 5.8.5 FAX speaker (SP1)

1. Remove the control panel left cover/1.
   G.5.2.6 Control panel left cover/1
2. Remove the control panel right cover.
   G.5.2.8 Control panel right cover
3. Remove the control panel upper cover.
   G.5.2.9 Control panel upper cover
4. Remove the control panel front cover.
   G.5.2.10 Control panel front cover
5. Remove the control panel left cover/2.
   G.5.2.7 Control panel left cover/2

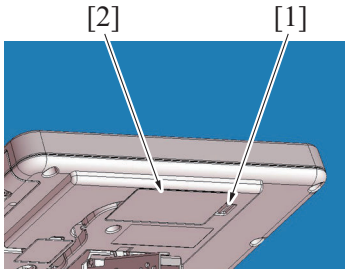


6. Unhook the claw [1], and remove the connector cover [2].

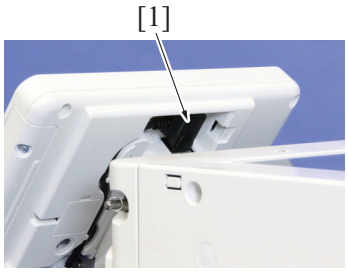


7. Disconnect the connector [1].

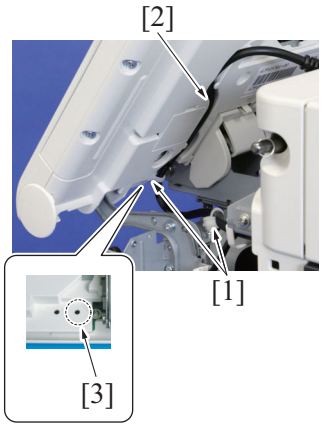


8. Remove two cable ties [1] from the control panel.
9. Remove the cable from the cable guide [2].
   **NOTE**
   - **At installation of the control panel unit, insert the cable tie [1] to the hole [3] shown in the illustration.**

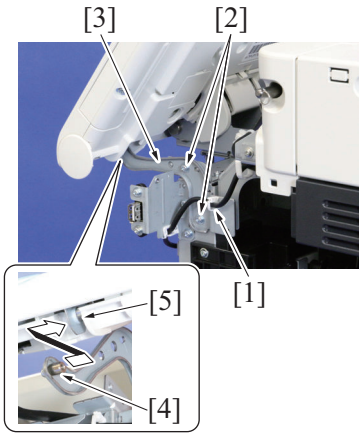


*10.* Remove the harness from the wire saddle [1].
*11.* Remove two screws [2], and remove the metal plate [3].
**NOTE**
- **When installing the control panel, install the metal panel shaft [4] into the hole [5] in the figure.**

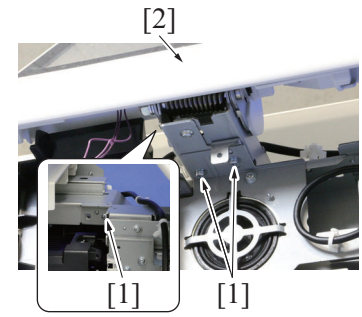


*12.* Remove three screws [1], and remove the control panel unit [2].

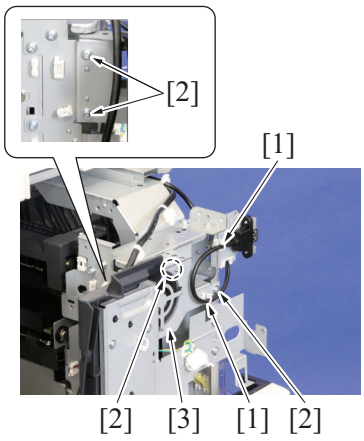


*13.* Remove the cable from two wire saddles [1].
*14.* Remove four screws [2], and remove the FAX speaker assy [3].

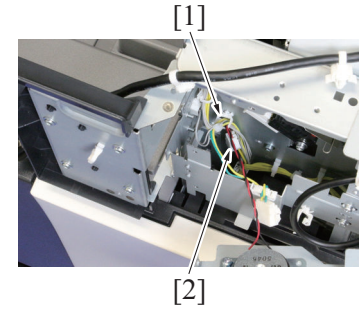


*15.* Remove the harness from the wire saddle [1], and disconnect the connector [2].

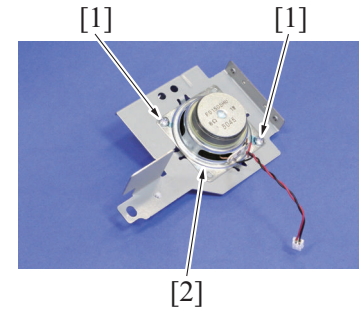


*16.* Remove two screws [1], and remove the FAX speaker [2].

*17.* To reinstall, reverse the order of removal.

### 5.8.6 Bypass CD paper size VR (VR1)

*1.* Remove the manual bypass tray unit.
G.5.3.6 Manual bypass tray unit

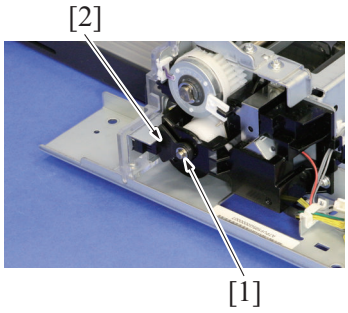


*2.* Remove the E-ring [1], and remove the actuator [2].

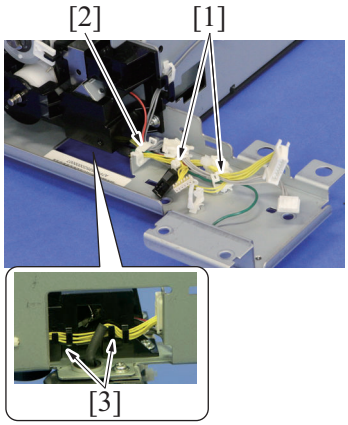


*3.* Remove the harness from two wire saddles [1] and the edge cover [2].
*4.* Remove the harness from two harness guides [3].

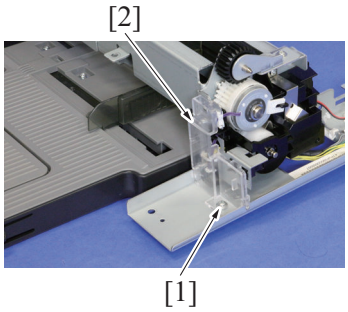


*5.* Remove the screw [1], and remove the connector cover [2].

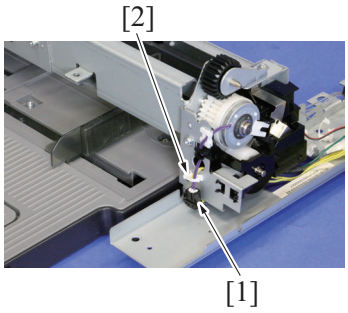


*6.* Disconnect the connector [1], and remove the harness from the harness guide [2].

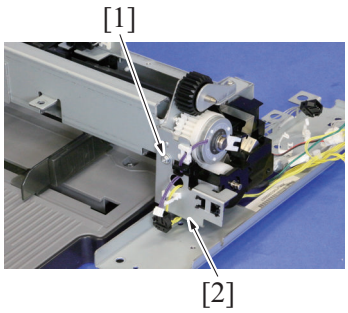


7. Remove the screw [1], and remove the metal plate [2] together with the harness.

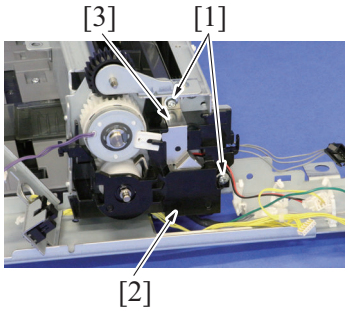


8. Remove two screws [1], and remove the solenoid cover [2] and the earth plate [3].

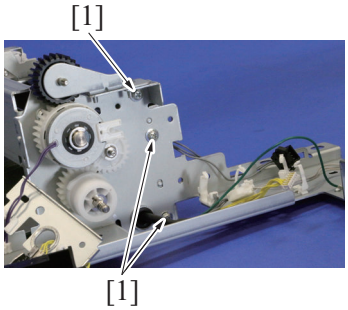


9. Remove three screws [1].

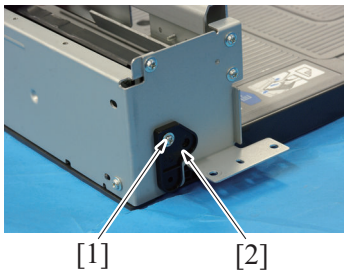


10. Remove the screw [1], and remove the hinge [2].

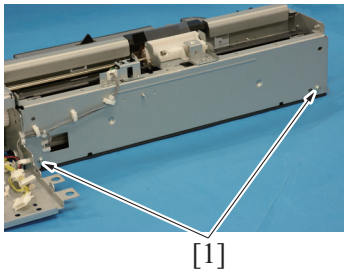


11. Remove two screws [1].

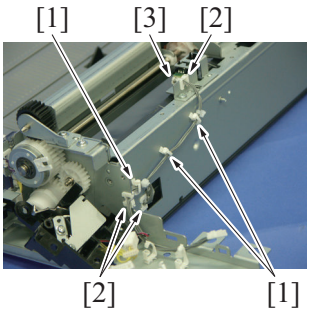


*12.* Remove the harness from three wire saddles [1] and three edge covers [2], and disconnect the connector [3].

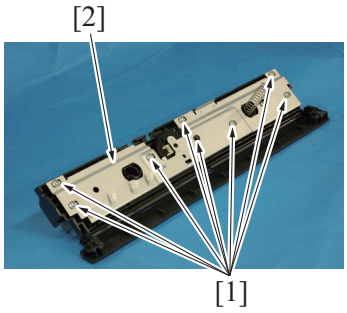


*13.* Remove eight screws [1], and remove the cover [2].

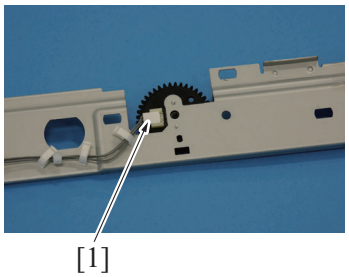


*14.* Disconnect the connector [1].

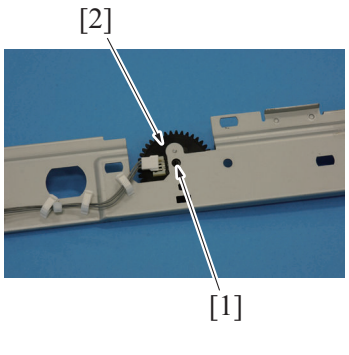


*15.* Remove the tab [1], and remove the gear [2].

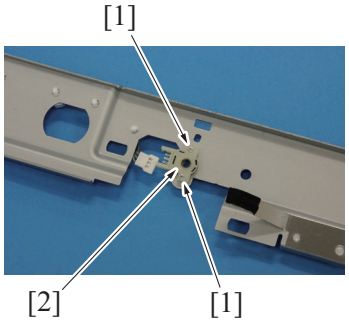


*16.* Remove two screws [1], and remove the bypass CD paper size VR [2].

*17.* To reinstall, reverse the order of removal.

### 5.8.7 UFP filter/ Deodorant filter

#### (1) UFP filter

**NOTE**

- **The UFP filter is standard equipment only on models destined for Europe.**

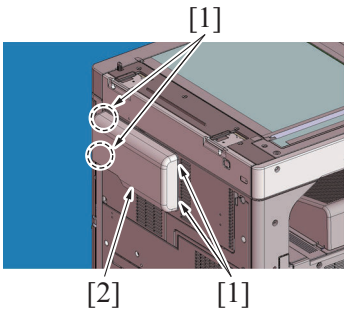


1. Remove four tabs [1], and remove the ventilation cover [2].

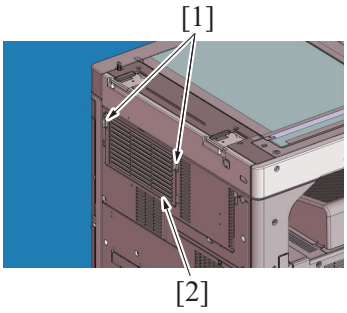


2. Remove two tabs [1], and remove the filter cover [2].

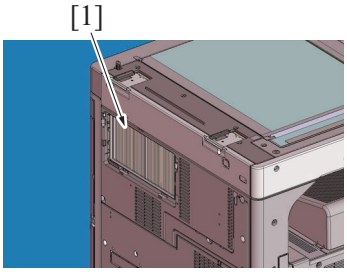


3. Remove the UFP filter [1].

4. To reinstall, reverse the order of removal.

### (2) Deodorant filter

**NOTE**

- **The deodorant filter is standard equipment only on models destined for China.**

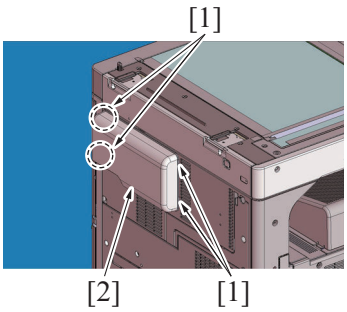


1. Remove four tabs [1], and remove the ventilation cover [2].

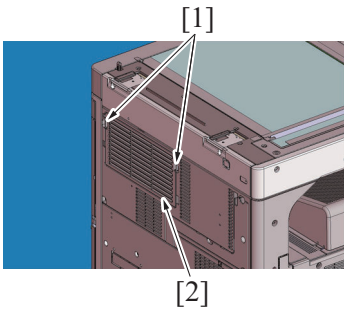


2. Remove two tabs [1], and remove the filter cover [2].

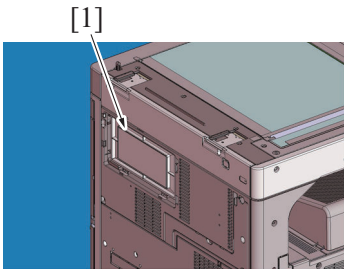


3. Remove the deodorant filter [1].

4. To reinstall, reverse the order of removal.

### (3) When both the UFP filter and deodorant filter are installed.

**NOTE**

- **The UFP filter and odor filter can be used combined. In this situation, install by the following procedure.**

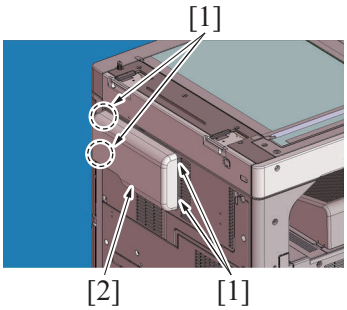


1. Remove four tabs [1], and remove the ventilation cover [2].

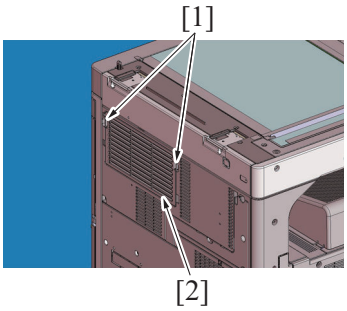


2. Remove two tabs [1], and remove the filter cover [2].

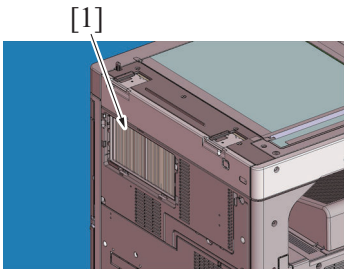


3. Install the UFP filter [1].

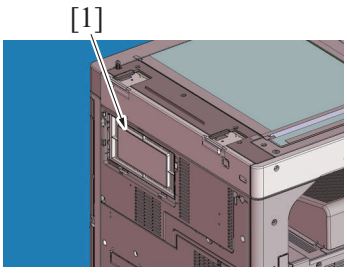


4. Install the deodorant filter [1].

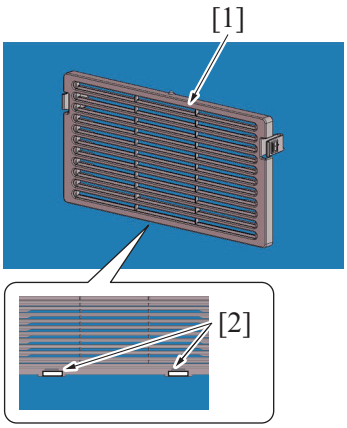


*5.* Peel off two seals [2] from the filter cover [1].

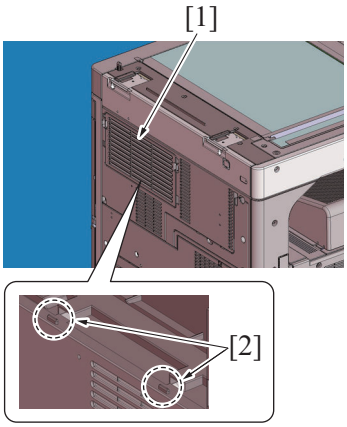


*6.* Install the filter cover [1].
**NOTE**
- **Install the filter cover [1] while hooking the slots where the seals have been peeled off onto the protrusions [2] on the main body.**

*7.* Install the exhaust cover.

# 6. Option

## 6.1 Disassembly/reassembly parts list

### 6.1.1 DF-629

| Section | Part name | Ref. page |
|---|---|---|
| Exterior parts | Front cover | G.6.2.1 Front cover (DF-629) |
| | Rear cover | G.6.2.2 Rear cover (DF-629) |
| | Left cover unit | G.6.2.3 Left cover unit (DF-629) |
| Units | Reverse automatic document feeder | G.6.2.4 Reverse automatic document feeder (DF-629) |
| | Glass cleaning roller unit | G.6.2.5 Glass cleaning roller unit (DF-629) |
| Board and etc. | DF control board (DFCB) | G.6.2.6 DF control board (DFCB) (DF-629) |
| | Document width size sensor (VR1) | G.6.2.7 Document width size sensor (VR1) (DF-629) |
| Others | Document reading motor (M1) | G.6.2.8 Document reading motor (M1) (DF-629) |
| | Document feed motor (M2) | G.6.2.9 Document feed motor (M2) (DF-629) |
| | Registration motor (M3) | G.6.2.10 Registration motor (M3) (DF-629) |
| | Glass cleaning motor (M4) | G.6.2.11 Glass cleaning motor (M4) (DF-629) |
| | Reading roll release motor (M5) | G.6.2.12 Reading roll release motor (M5) (DF-629) |
| | DF cooling fan motor (FM1) | G.6.2.13 DF cooling fan motor (FM1) (DF-629) |
| | Document exit roller release solenoid (SD1) | G.6.2.14 Document exit roller release solenoid (SD1) (DF-629) |
| | Stamp unit | G.6.2.15 Stamp unit (SP-501) |
| | Spare TX Marker Stamp 2 | G.6.2.16 Stamp (SP-501) |

### 6.1.2 DF-704

| Section | Part name | Ref. page |
|---|---|---|
| Exterior parts | Front cover | G.6.3.1 Front cover (DF-704) |
| | Rear cover | G.6.3.2 Rear cover (DF-704) |
| | Left cover unit | G.6.3.3 Left cover unit (DF-704) |
| Units | Dual scan document feeder | G.6.3.4 Dual scan document feeder (DF-704) |
| | Front side glass cleaning roller unit | G.6.3.5 Front side glass cleaning roller unit (DF-704) |
| | Back side glass cleaning roller unit | G.6.3.6 Back side glass cleaning roller unit (DF-704) |
| | CIS module (CIS) | G.6.3.7 CIS module (CIS) (DF-704) |
| Board and etc. | DF control board (DFCB) | G.6.3.8 DF control board (DFCB) (DF-704) |
| | Document width size sensor (VR1) | G.6.3.9 Document width size sensor (VR1) (DF-704) |
| | CIS power supply (CISPU) | G.6.3.10 CIS power supply (CISPU) (DF-704) |
| | Dual scan image processing board (DSIPB) | G.6.3.11 Dual scan board (DSIPB) (DF-704) |
| Others | Document reading motor (M1) | G.6.3.12 Document reading motor (M1) (DF-704) |
| | Document feed motor (M2) | G.6.3.13 Document feed motor (M2) (DF-704) |
| | Registration motor (M3) | G.6.3.14 Registration motor (M3) (DF-704) |
| | Reading roller release motor (M4) | G.6.3.15 Reading roller release motor (M4) (DF-704) |
| | CIS cleaning motor (M5) | G.6.3.16 CIS cleaning motor (M5) (DF-704) |
| | Document reading glass cleaning motor (M6) | G.6.3.17 Document reading glass cleaning motor (M6) (DF-704) |
| | DF cooling fan motor (FM1) | G.6.3.18 DF cooling fan motor (FM1) (DF-704) |
| | CIS cable | G.6.3.19 CIS cable (DF-704) |
| | Stamp unit | G.6.3.20 Stamp unit (SP-501) |
| | Spare TX Marker Stamp 2 | G.6.3.21 Stamp (SP-501) |

### 6.1.3 PC-110/PC-210

| Section | Part name | Ref. page |
|---|---|---|
| Exterior parts | Right door | G.6.4.1 Right door (PC-110/PC-210) |
| | Rear right cover | G.6.4.2 Rear right cover (PC-110/PC-210) |
| | Rear cover | G.6.4.3 Rear cover (PC-110/PC-210) |
| | Tray 3, Tray 4 | G.6.4.4 Tray 3, tray 4 (PC-110/PC-210) |
| Units | Paper feed cabinet | G.6.4.5 Paper feed cabinet (PC-110/PC-210) |
| | Tray 3 paper feed unit | G.6.4.6 Tray 3 paper feed unit (PC-110/PC-210) |
| | Tray 4 paper feed unit | G.6.4.7 Tray 4 paper feed unit (PC-210) |
| Boards | PC control board (PCCB) | G.6.4.8 PC control board (PCCB) (PC-110/PC-210) |

| Section | Part name | Ref. page |
|---|---|---|
| | Tray 3 paper empty indicator board (PEIB/3) | G.6.4.9 Tray 3 paper empty indicator board (PEIB/3), tray 4 paper empty indicator board (PEIB/4) (PC-110/ PC-210) |
| | Tray 4 paper empty indicator board (PEIB/4) | |
| | Tray 3 FD paper size board (FDPSB/3) | G.6.4.10 Tray 3 FD paper size board (FDPSB/3), tray 4 FD paper size board (FDPSB/4) (PC-110/PC-210) |
| | Tray 4 FD paper size board (FDPSB/4) | |
| | Tray 3 CD paper size board (CDPSB/3) | G.6.4.11 Tray 3 CD paper size board (CDPSB/3) (PC-110/PC-210) |
| | Tray 4 CD paper size board (CDPSB/4) | G.6.4.12 Tray 4 CD paper size board (CDPSB/4) (PC-210) |
| Motors | Tray 3 paper feed motor (M111) | G.6.4.13 Tray 3 paper feed motor (M111), tray 4 paper feed motor (M121) (PC-110/PC-210) |
| | Tray 4 paper feed motor (M121) | |
| | Tray 3 vertical transport motor (M112) | G.6.4.14 Tray 3 vertical transport motor (M112), tray 4 vertical transport motor (M122) (PC-110/PC-210) |
| | Tray 4 vertical transport motor (M122) | |
| | Tray 3 lift-up motor (M113) | G.6.4.15 Tray 3 lift-up motor (M113), tray 4 lift-up motor (M123) (PC-110/PC-210) |
| | Tray 4 lift-up motor (M123) | |

### 6.1.4 PC-410

| Section | Part name | Ref. page |
|---|---|---|
| Exterior parts | Right door | G.6.5.1 Right door (PC-410) |
| | Rear right cover | G.6.5.2 Rear right cover (PC-410) |
| | Rear cover | G.6.5.3 Rear cover (PC-410) |
| | Paper feed tray | G.6.5.4 Paper feed tray (PC-410) |
| Units | Paper feed cabinet | G.6.5.5 Paper feed cabinet (PC-410) |
| | Paper feed unit | G.6.5.6 Paper feed unit (PC-410) |
| Boards | PC control board (PCCB) | G.6.5.7 PC control board (PCCB) (PC-410) |
| | Tray 3 paper empty indicator board (PEIB/3) | G.6.5.8 Tray 3 paper empty indicator board (PEIB/3) (PC-410) |
| Motors | Paper feed motor (M131) | G.6.5.9 Paper feed motor (M131) (PC-410) |
| | Vertical transport motor (M132) | G.6.5.10 Vertical transport motor (M132) (PC-410) |
| | Elevator motor (M134) | G.6.5.11 Elevator motor (M134) (PC-410) |
| | Shifter motor (M133) | G.6.5.12 Shifter motor (M133) (PC-410) |
| etc. | Wire | G.6.5.13 Wire (PC-410) |

### 6.1.5 LU-302

| Section | Part name | Ref. page |
|---|---|---|
| Exterior parts | Upper door | G.6.6.2 Upper door (LU-302) |
| | Right cover | G.6.6.3 Right cover (LU-302) |
| | Front cover | G.6.6.4 Front cover (LU-302) |
| | Rear cover | G.6.6.5 Rear cover (LU-302) |
| | Feed cover | G.6.6.6 Feed cover (LU-302) |
| Units | Large capacity unit | G.6.6.1 Large capacity unit (LU-302) |
| Boards | LU drive board (LUDB) | G.6.6.8 LU drive board (LUDB) (LU-302) |
| Motors | Lift-up motor (M1) | G.6.6.9 Lift-up motor (M1) (LU-302) |
| Others | Dehumidification heater (DH) | G.6.6.10 Dehumidification heater (DH) (LU-302) |
| Up/down section | Lift wire | G.6.6.7 Lift wire (LU-302) |

### 6.1.6 JS-506

| Section | Part name | Ref. page |
|---|---|---|
| Exterior parts | Exit tray 1 | G.6.7.1 Exit tray 1 (JS-506) |
| | Exit tray 2 | G.6.7.2 Exit tray 2 (JS-506) |
| Units | Job separator | G.6.7.3 Job separator (JS-506) |
| | Sensor unit | G.6.7.4 Sensor unit (JS-506) |
| Boards | JS control board (JSCB) | G.6.7.5 JS control board (JSCB) (JS-506) |
| Motors | Tray shift motor (M1) | G.6.7.6 Tray shift motor (M1) (JS-506) |

### 6.1.7 FS-533

| Section | Part name | Ref. page |
|---|---|---|
| Exterior parts | Front cover | G.6.8.1 Front cover (FS-533) |

| Section | Part name | Ref. page |
|---|---|---|
| | Upper cover | G.6.8.2 Upper cover (FS-533) |
| | Rear cover | G.6.8.3 Upper cover (FS-533) |
| Units | Finisher | G.6.8.4 Finisher (FS-533) |
| | Stapler unit | G.6.8.5 Stapler unit (FS-533) |
| | Paper exit tray unit | G.6.8.6 Paper exit tray unit (FS-533) |
| Boards | FS control board (FSCB) | G.6.8.7 FS control board (FSCB) (FS-533) |
| | Stapler relay board (STREYB) | G.6.8.8 Stapler relay board (STREYB) (FS-533) |
| Motors | Paper conveyance motor (M101) | G.6.8.9 Paper conveyance motor (M101) (FS-533) |
| | Paper exit motor (M102) | G.6.8.10 Paper exit motor (M102) (FS-533) |
| | Alignment roller motor (M103) | G.6.8.11 Alignment roller motor (M103) (FS-533) |
| | Exit roller lift up motor (M104) | G.6.8.12 Exit roller lift up motor (M104) (FS-533) |
| | Alignment motor/F (M105) | G.6.8.13 Alignment motor/F (M105), Alignment motor/R (M106) (FS-533) |
| | Alignment motor/R (M106) | G.6.8.13 Alignment motor/F (M105), Alignment motor/R (M106) (FS-533) |
| | Stapler movement motor (M107) | G.6.8.14 Stapler movement motor (M107) (FS-533) |
| | Tray lift up motor (M109) | G.6.8.15 Tray lift up motor (M109) (FS-533) |
| | Paper surface detect solenoid (SD101) | G.6.8.16 Paper surface detect solenoid (SD101) (FS-533) |
| | Batch solenoid (SD102) | G.6.8.17 Batch solenoid (SD102) (FS-533) |
| | Paper exit roller solenoid (SD103) | G.6.8.18 Paper exit roller solenoid (SD103) (FS-533) |
| etc. | Paper exit paddle | G.6.8.19 Paper exit paddle (FS-533) |

### 6.1.8 PK-519

| Section | Part name | Ref. page |
|---|---|---|
| Units | Punch kit | G.6.9.1 Punch kit (PK-519) |
| Boards | PK control board (PKCB) | G.6.9.2 PK control board (PKCB) (PK-519) |
| Motors | Punch motor (M201) | G.6.9.3 Punch motor (M201) (PK-519) |

### 6.1.9 FS-534/FS-534SD

| Section | Part name | Ref. page |
|---|---|---|
| Exterior parts | Rear cover | G.6.10.1 Rear cover (FS-534/FS-534SD) |
| | Front door | G.6.10.2 Front door (FS-534/FS-534SD) |
| | Front upper cover | G.6.10.3 Front upper cover (FS-534/FS-534SD) |
| | Left lower cover | G.6.10.4 Left lower cover (FS-534/FS-534SD) |
| | Front lower cover | G.6.10.5 Front lower cover (FS-534/FS-534SD) |
| Units | Finisher | G.6.10.6 Finisher (FS-534/FS-534SD) |
| | Horizontal transport unit | G.6.10.7 Relay unit (RU-513) |
| | Stapler unit | G.6.10.8 Stapler unit (FS-534/FS-534SD) |
| | Sensor unit | G.6.10.9 Sensor unit (FS-534/FS-534SD) |
| | Saddle unit | G.6.10.10 Saddle unit (FS-534SD) |
| Boards | FS control board (FSCB) | G.6.10.11 FS control board (FSCB) (FS-534/FS-534SD) |
| Motors | RU transport motor (M1) | G.6.10.12 RU transport motor (M1) (RU-513) |
| | FNS entry transport motor (M2) | G.6.10.13 FNS entry transport motor (M2) (FS-534/FS-534SD) |
| | FNS discharge motor (M3) | G.6.10.14 FNS discharge motor (M3) (FS-534/FS-534SD) |
| | Receiving roller retraction motor (M4) | G.6.10.15 Receiving roller retraction motor (M4) (FS-534/FS-534SD) |
| | FNS paddle motor (M5) | G.6.10.16 FNS paddle motor (M5) (FS-534/FS-534SD) |
| | Trailing edge stopper motor (M6) | G.6.10.17 Trailing edge stopper motor (M6) (FS-534/FS-534SD) |
| | Alignment motor/front (M7) | G.6.10.18 Alignment motor/front (M7) (FS-534/FS-534SD) |
| | Alignment motor/rear (M8) | G.6.10.19 Alignment motor/rear (M8) (FS-534/FS-534SD) |
| | Pre-eject drive motor (M9) | G.6.10.20 Pre-eject drive motor (M9) (FS-534/FS-534SD) |

| Section | Part name | Ref. page |
|---|---|---|
| | Bundle eject motor (M10) | G.6.10.21 Bundle eject motor (M10) (FS-534/ FS-534SD) |
| | Main tray up/down motor (M11) | G.6.10.22 Main tray up/down motor (M11) (FS-534/ FS-534SD) |
| | Paper receiving control motor (M12) | G.6.10.23 Paper receiving control motor (M12) (FS-534/FS-534SD) |
| | Side stapler movement motor (M13) | G.6.10.24 Side stapler movement motor (M13) (FS-534/FS-534SD) |

### 6.1.10 SD-511

| Section | Part name | Ref. page |
|---|---|---|
| Exterior parts | Front cover | G.6.11.1 Front cover (SD-511) |
| Units | Paper exit tray | G.6.11.2 Paper exit tray (SD-511) |
| | Staple unit | G.6.11.3 Staple unit (SD-511) |
| Boards | SD drive board (SDDB) | G.6.11.4 SD drive board (SDDB) (SD-511) |
| Motors | SD transport motor (M1) | G.6.11.5 SD transport motor (M1) (SD-511) |
| | Paper discharge control motor (M2) | G.6.11.6 Paper discharge control motor (M2) (SD-511) |
| | Alignment motor (M3) | G.6.11.7 Alignment motor (M3) (SD-511) |
| | Stopper drive motor (M4) | G.6.11.8 Stopper drive motor (M4) (SD-511) |
| | Center fold roller motor (M5) | G.6.11.9 Center fold roller motor (M5) (SD-511) |
| | Tri-folding guide motor (M6) | G.6.11.10 Tri-folding guide motor (M6) (SD-511) |
| | SD paddle motor (M7) | G.6.11.11 SD paddle motor (M7) (SD-511) |
| | Center fold guide motor (M8) | G.6.11.12 Center fold guide motor (M8) (SD-511) |
| | Center fold knife motor (M9) | G.6.11.13 Center fold knife motor (M9) (SD-511) |
| | Stopper solenoid (SD1) | G.6.11.14 Stopper solenoid (SD1) (SD-511) |

### 6.1.11 PK-520

| Section | Part name | Ref. page |
|---|---|---|
| Units | Punch kit | G.6.12.1 Punch kit (PK-520) |

### 6.1.12 SC-508

| Section | Part name | Ref. page |
|---|---|---|
| Boards | DSC board/1 (for front side) | G.6.13.1 DSC board/1 (for front side) (SC-508) |
| | DSC board/2 (for back side) | G.6.13.2 DSC board/2 (for back side) (SC-508) |

### 6.1.13 UK-211

| Section | Part name | Ref. page |
|---|---|---|
| Units | Upgrade kit | G.6.14.1 Upgrade kit (UK-211) |

### 6.1.14 UK-212

| Section | Part name | Ref. page |
|---|---|---|
| Units | Upgrade kit | G.6.15.1 Upgrade kit (UK-212) |

### 6.1.15 FK-515

| Section | Part name | Ref. page |
|---|---|---|
| Units | FAX board (line 3), FAX board (line 4) | G.6.16.1 FAX board (line 3), FAX board (line 4) (FK-515) |

### 6.1.16 FK-514

| Section | Part name | Ref. page |
|---|---|---|
| Units | FAX board (line 1), FAX board (line 2) | G.6.17.1 FAX Kit (Line1), FAX Kit (Line2) (FK-511)<br>G.6.17.1 FAX Kit (Line1), FAX Kit (Line2) (FK-511) |

### 6.1.17 HD-524

| Section | Part name | Ref. page |
|---|---|---|
| Units | Hard disk (B) | G.6.18.1 Hard disk (B) (HDD-524) |

### 6.1.18 CU-101

| Section | Part name | Ref. page |
|---|---|---|
| Exterior parts | Clean unit cover | G.6.19.1 Clean unit cover |
| Units | Clean unit | G.6.19.2 Clean unit (CU-101) |
| Boards | Clean unit drive board | G.6.19.3 Clean unit drive board (CUDB) |
| Fan | Exhaust fan/1 | G.6.19.4 Exhaust fan/1 (FM14) |
| | Exhaust fan/2 | G.6.19.5 Exhaust fan/2 (FM15) |
| | Suction fan | G.6.19.6 Suction fan (FM16) |
| Others | Deodorant filter/UFP filter | G.6.19.7 Deodorant filter/UFP filter |

### 6.1.19 KP-101

| Section | Part name | Ref. page |
|---|---|---|
| Units | Keypad | G.6.20.1 Keypad (KP-101) |

## 6.2 Disassembly/reassembly procedure (DF-629/SP-501)

### 6.2.1 Front cover (DF-629)

1. Open the reverse automatic document feeder.

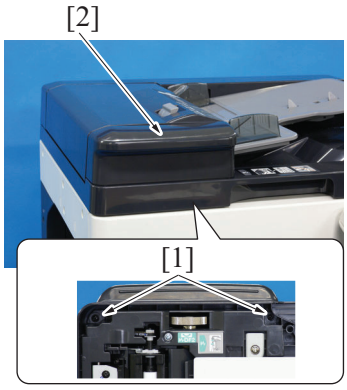


2. Remove two screws [1] and remove the front cover [2].

3. To reinstall, reverse the order of removal.

### 6.2.2 Rear cover (DF-629)

1. Open the reverse automatic document feeder.

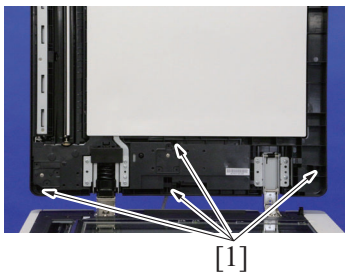


2. Remove four screws [1].
**NOTE**
- **If the reverse automatic document feeder is set to be lifted up at angles up to 60 degrees due to the set position of the stopper for the hinge, change the set position to the lower side so that the reverse automatic document feeder can be opened completely.**

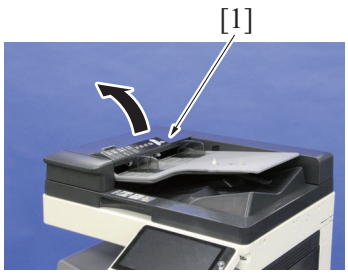


3. Open the left cover [1].

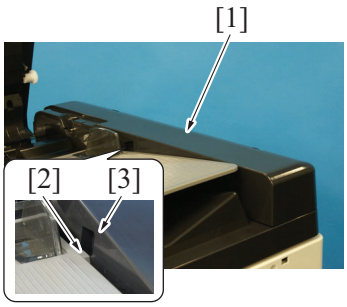


4. Remove the rear cover [1].
**NOTE**
- **For mounting the rear cover, mount it so that the protrusion [2] of the document feed tray will fit to the groove [3] on the rear cover.**

5. To reinstall, reverse the order of removal.

### 6.2.3 Left cover unit (DF-629)

1. Remove the rear cover.
G.6.2.2 Rear cover (DF-629)

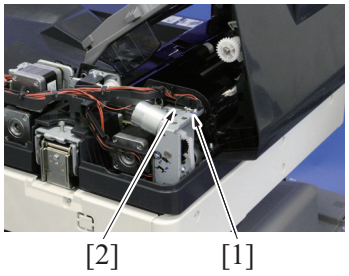


2. Remove the screw [1], and remove the ground earth [2] from the harness guide.

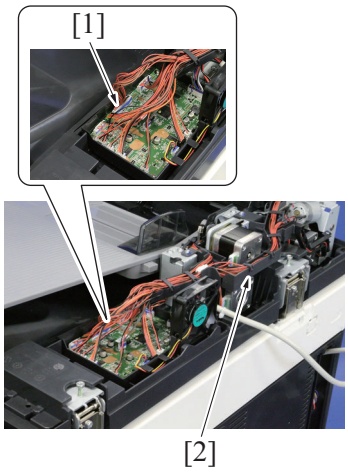


3. Disconnect the connector [1], and remove the harness from the harness guide [2].

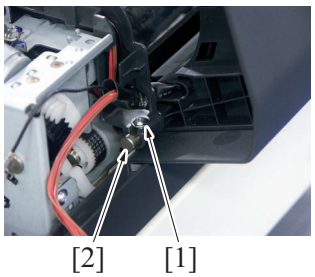


4. Remove the screw [1], and remove the shaft [2].

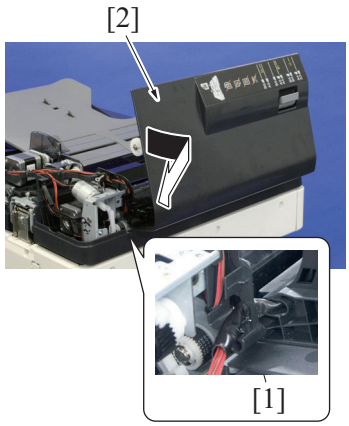


5. Remove the left cover unit [2] as shown in the illustration while pressing the harness into the hole [1] shown in the illustration.

6. To reinstall, reverse the order of removal.

### 6.2.4 Reverse automatic document feeder (DF-629)

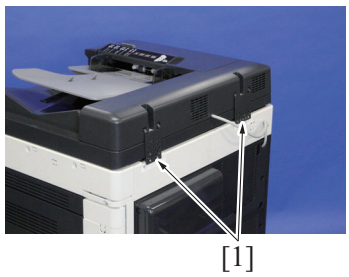


1. Remove two hinge covers [1].

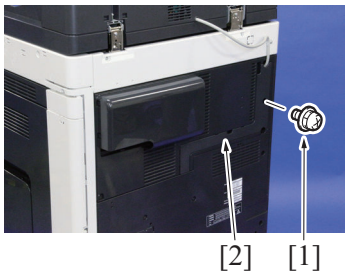


2. Remove the screws [1], and remove the DF cable cover [2] from the back of the main body.

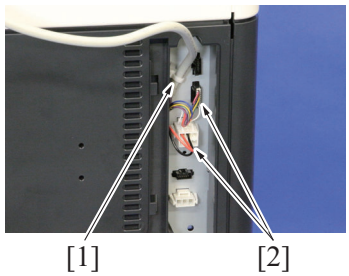


3. Remove the cable tie [1], and disconnect two connectors [2].

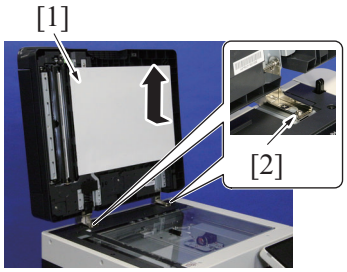


4. Open the reverse automatic document feeder [1].
**NOTE**
- **If the reverse automatic document feeder is set to be lifted up at angles up to 60 degrees due to the set position of the stopper for the hinge, change the set position to the lower side so that the reverse automatic document feeder can be opened completely.**

5. Remove two screws [2].
6. Remove the reverse automatic document feeder [1].

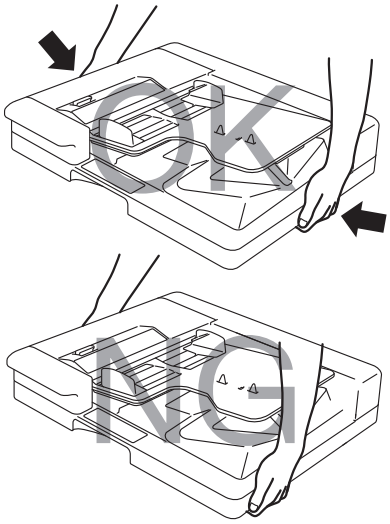


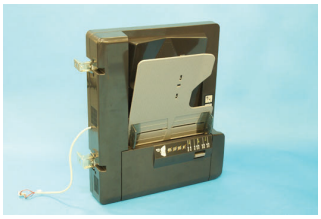

**NOTE**

- **When carrying the reverse automatic document feeder, be sure to hold onto the specified positions. The feeder main body can be distorted if held at inappropriate positions.**
- **After removing the reverse automatic document feeder from the machine, place it on the floor or the like as shown in the illustration.**

7. To reinstall, reverse the order of removal.

### 6.2.5 Glass cleaning roller unit (DF-629)

1. Remove the front cover.
   G.6.2.1 Front cover (DF-629)
2. Remove the reverse automatic document feeder.
   G.6.2.4 Reverse automatic document feeder (DF-629)



3. Place the reverse automatic document feeder vertically as shown in the illustration.

4. Remove the C-clip [1] and the bushing [2].

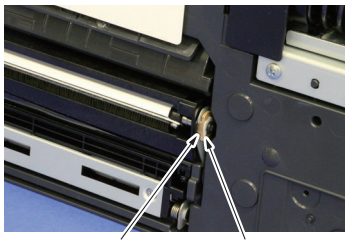

5. Remove the C-clip [1], and shift the bushing [2], and remove the belt [3].
6. Remove the glass cleaning roller unit [4].

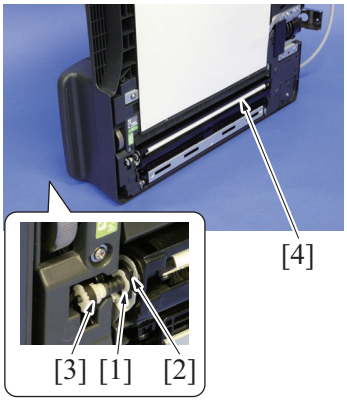


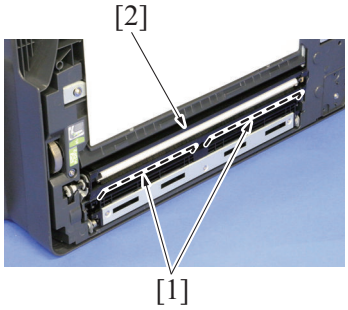


**NOTE**
- **When installing the glass cleaning roller unit [2], make sure that the transparent sheets [1] are outside of the glass cleaning roller unit [2].**

7. To reinstall, reverse the order of removal.

**NOTE**
- **When installing the glass cleaning roller unit, the following adjustment is necessary.**

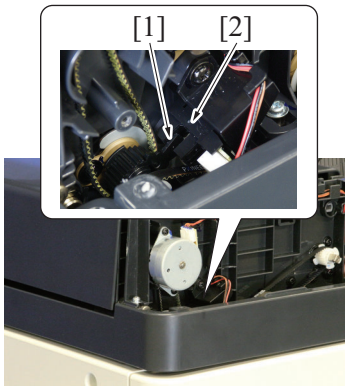


- **Adjust the actuator [1] so that it is positioned where it blocks the light of the document reading glass cleaning sensor [2], and install the belt.**

- **After completing the above adjustment, when you turn ON the main power switch, make sure that the shaft [1] is at the correct position (home position).**

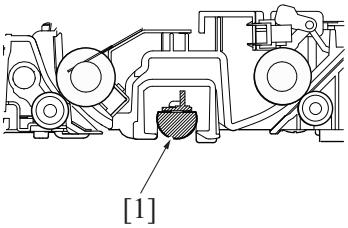


### 6.2.6 DF control board (DFCB) (DF-629)

1. Remove the rear cover.
G.6.2.2 Rear cover (DF-629)

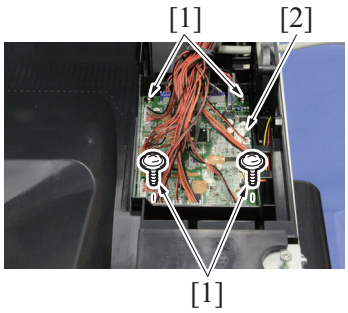


2. Disconnect all the fifteen connectors from the DF control board.
3. Remove four screws [1], and remove the DF control board [2].
4. To reinstall, reverse the order of removal.

**NOTE**

- **Be sure to perform the following steps after the DF control board has been replaced with a new one.**
- **Install the firmware.**
- **Execute [Service Mode] -> [ADF] -> [Original Tray Width].**
  **I.5.21.6 Original Tray Width**
- **Execute [Service Mode] -> [ADF] -> [Mixed original Size adjustment].**
  **I.5.21.10 Mixed original size adjustment**

### 6.2.7 Document width size sensor (VR1) (DF-629)

1. Remove the rear cover.
   G.6.2.2 Rear cover (DF-629)
2. Lift up the document feed tray [1].

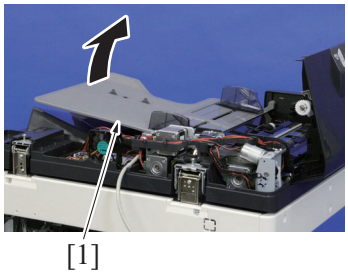


3. Remove the lever for document exit [1].
4. Remove six screws [2] and remove the cover [3].

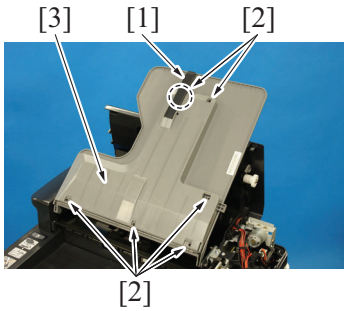


5. Remove two screws [1] and disconnect the connector [2], and remove the document width size sensor [3].

**NOTE**

- **For mounting the document width size sensor, widen the side edge stop [4] of the document feed tray fully and make sure that the round hole [5] of the gear is at the position as shown on the illustration.**

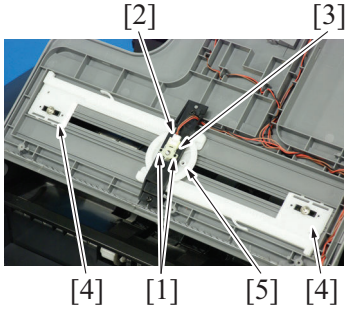

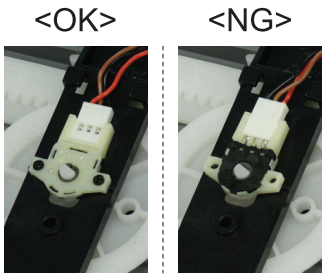


**NOTE**
- **For mounting the document width size sensor, mount it in the direction shown on the illustration.**

6. To reinstall, reverse the order of removal.

**NOTE**
- **Be sure to perform the following operation when the document width size sensor is replaced.**
- **Execute [Service Mode] -> [ADF] -> [Original Tray Width].**
  **I.5.21.6 Original Tray Width**
- **Turn OFF the main power switch and turn it ON again and check whether size detection operates normally.**

### 6.2.8 Document reading motor (M1) (DF-629)

1. Remove the rear cover.
   G.6.2.2 Rear cover (DF-629)
2. Remove the reading roller release motor.
   G.6.2.12 Reading roll release motor (M5) (DF-629)

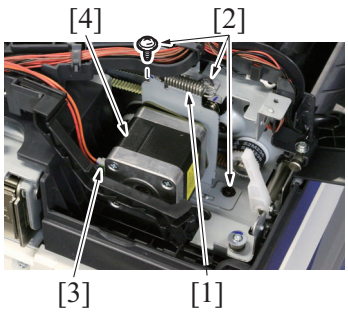


3. Remove the spring [1], and remove three screws [2].
4. Disconnect the connector [3], and remove the document reading motor assy [4].

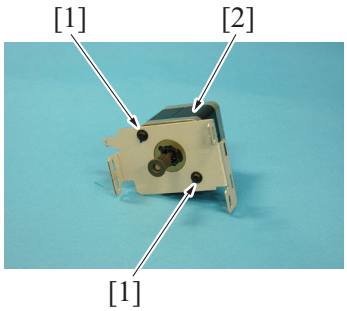


5. Remove two screws [1], and remove the document reading motor [2].

**NOTE**
- **For mounting it, set the document reading motor to the belt position [1] shown on the illustration.**

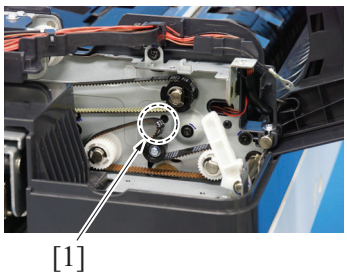


6. To reinstall, reverse the order of removal.

### 6.2.9 Document feed motor (M2) (DF-629)

1. Remove the rear cover.
   G.6.2.2 Rear cover (DF-629)

2. Lift up the document feed tray [1].

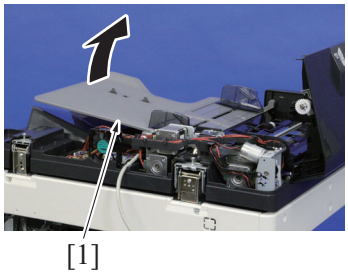


3. Disconnect the connector [1].
4. Remove two screws [2], and remove the document feed motor [3].

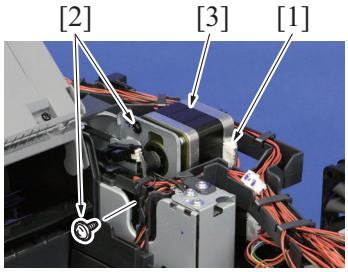


5. To reinstall, reverse the order of removal.

### 6.2.10 Registration motor (M3) (DF-629)

1. Remove the rear cover.
   G.6.2.2 Rear cover (DF-629)
2. Remove the document feed motor.
   G.6.2.9 Document feed motor (M2) (DF-629)

3. Disconnect the connector [1].
4. Remove the spring [2].

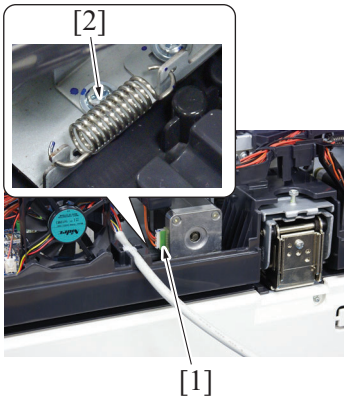


5. Remove three screws [1], and remove the registration motor assy [2].

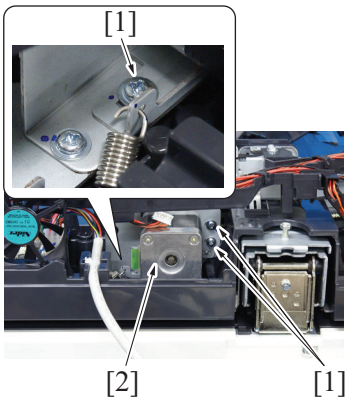

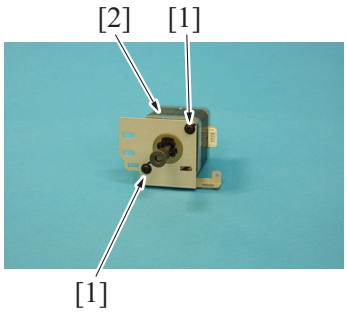


6. Remove two screws [1], and remove the registration motor [2].

7. To reinstall, reverse the order of removal.

### 6.2.11 Glass cleaning motor (M4) (DF-629)

1. Remove the front cover.
G.6.2.1 Front cover (DF-629)

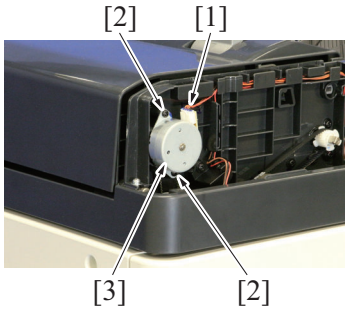


2. Disconnect the connector [1].
3. Remove two screws [2], and remove the glass cleaning motor [3].

4. To reinstall, reverse the order of removal.

### 6.2.12 Reading roll release motor (M5) (DF-629)

1. Remove the rear cover.
G.6.2.2 Rear cover (DF-629)

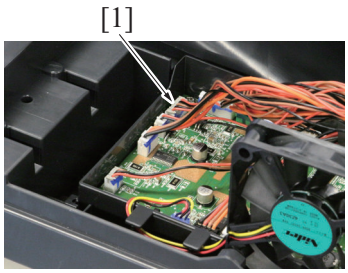


2. Disconnect the connector (J18) [1] on the DF control board.

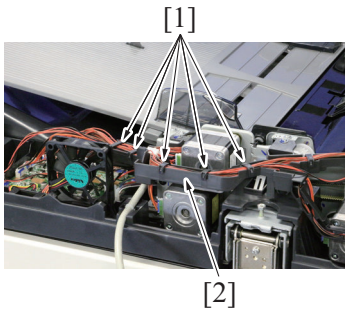


3. Remove five wire saddles [1] and remove the harness from the harness guide [2].

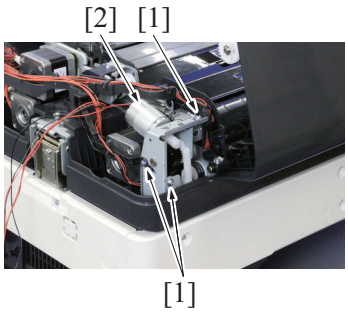


4. Remove three screws [1], and remove the drive assy [2].

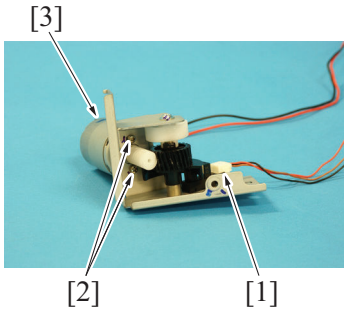


5. Disconnect the connector [1].
6. Remove two screws [2], and remove the reading roll release motor [3].

7. To reinstall, reverse the order of removal.

### 6.2.13 DF cooling fan motor (FM1) (DF-629)

1. Remove the rear cover.
G.6.2.2 Rear cover (DF-629)

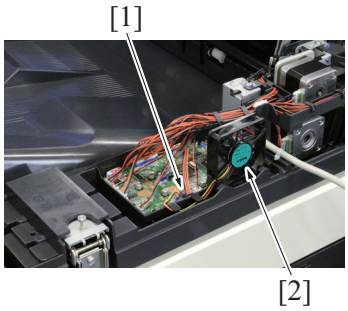


2. Disconnect the connector [1].
3. Remove the DF cooling fan motor [2].

4. To reinstall, reverse the order of removal.

### 6.2.14 Document exit roller release solenoid (SD1) (DF-629)

1. Remove the rear cover.
G.6.2.2 Rear cover (DF-629)

2. Lift up the document feed tray [1].

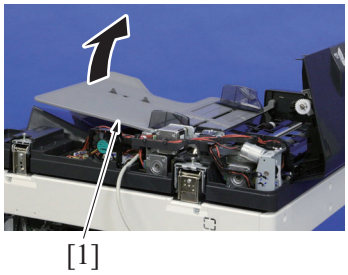

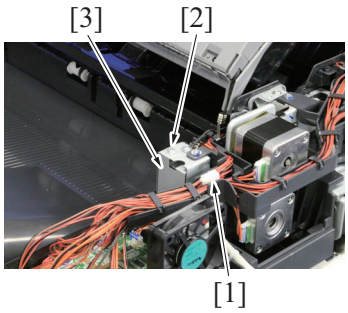


3. Disconnect the hookup connector [1].
4. Remove the screw [2], and remove the plate [3].

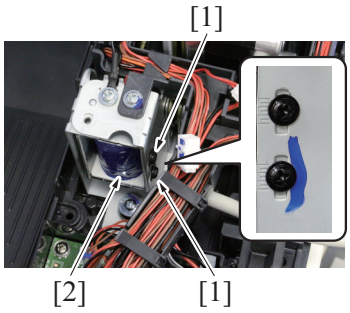


5. Remove two screws [1], and remove the document exit roller release solenoid [2].

**NOTE**

- **Mark the screw installing location so that the document exit roller release solenoid can be mounted on its original location.**

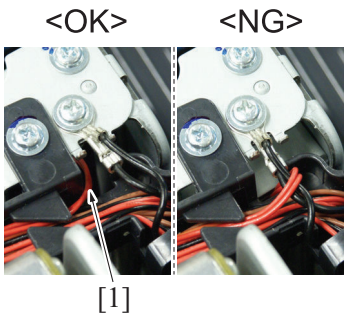


**NOTE**

- **When mounting it, set the harness through the hole [1] shown on the illustration.**

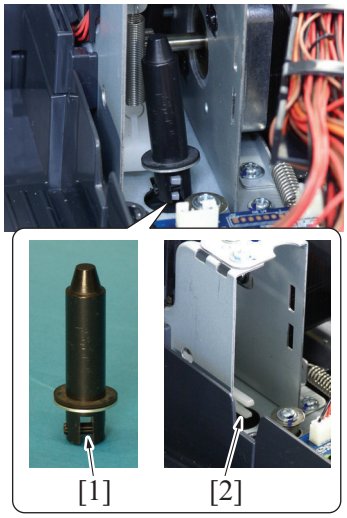


**NOTE**

- **Insert the core at the bottom [1] so that the parts shown as [2] on the illustration will be properly set before mounting the document exit roller release solenoid.**

6. To reinstall, reverse the order of removal.

### 6.2.15 Stamp unit (SP-501)

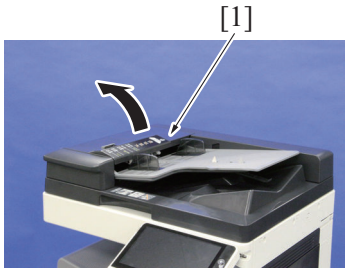


1. Open the left cover [1].

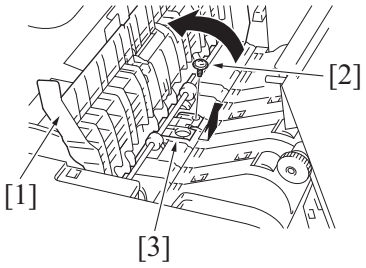


2. Lift up the guide plate DF1 [1].
3. Remove the screw [2], and remove the cover [3].

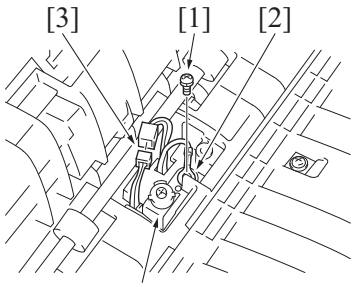


4. Remove the screw [1], and remove the ground terminal [2].
5. Disconnect the connector [3].
6. Remove the stamp unit [4].
   **NOTE**
   - **Ensure that the ground terminal is on the upper side of the mounting bracket of stamp unit.**
   - **Route the harness as shown in the illustration to place its connector under the guide plate.**

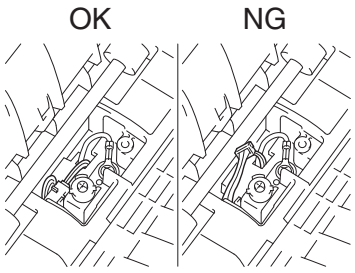


7. To reinstall, reverse the order of removal.

### 6.2.16 Stamp (SP-501)

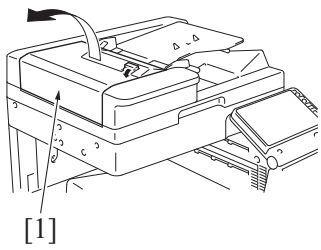


1. Open the left cover [1].

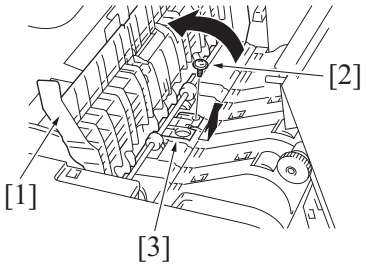


2. Lift up the guide plate DF1 [1].
3. Remove the screw [2], and remove the cover [3].

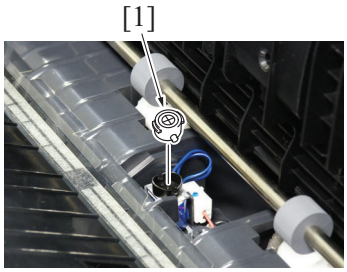


4. Remove the used stamp, and install the new stamp of replacement [1].
**NOTE**
- **Align the round pin of the stamp with the slit in the stamp unit side.**

5. To reinstall, reverse the order of removal.

## 6.3 Disassembly/reassembly procedure (DF-704/SP-501)

### 6.3.1 Front cover (DF-704)

1. Open the dual scan document feeder.

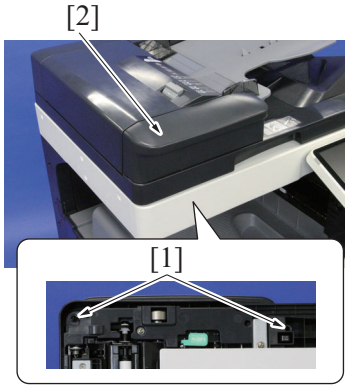


2. Remove two screws [1] and remove the front cover [2].
3. To reinstall, reverse the order of removal.

### 6.3.2 Rear cover (DF-704)

1. Open the dual scan document feeder.

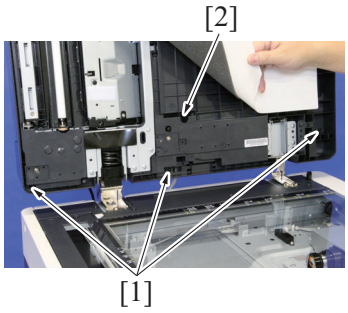


2. Remove three screws [1].
3. While peeling off the mat, remove the screw [2].
**NOTE**
- **If the reverse automatic document feeder is set to be lifted up at angles up to 60 degrees due to the set position of the stopper for the hinge, change the set position to the lower side so that the reverse automatic document feeder can be opened completely.**

4. Open the left cover [1].

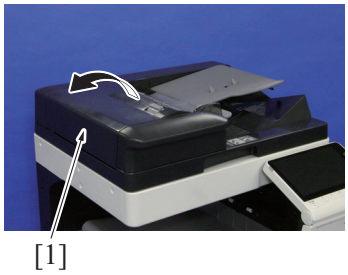


5. Remove the rear cover [1].
**NOTE**
- **For mounting the rear cover, mount it so that the protrusion [2] of the document feed tray will fit to the groove [3] on the rear cover.**

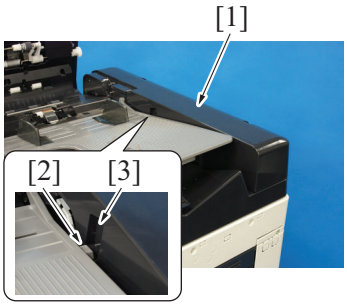


6. To reinstall, reverse the order of removal.

### 6.3.3 Left cover unit (DF-704)

1. Remove the rear cover.
G.6.3.2 Rear cover (DF-704)

2. Remove the screw [1], and remove the ground earth [2] from the harness guide.

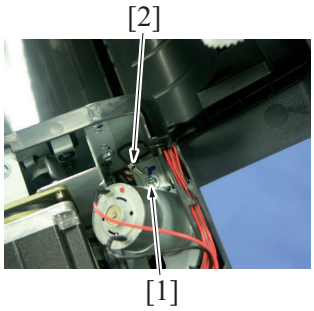


3. Disconnect the connector [1], and remove the harness from the harness guide [2].

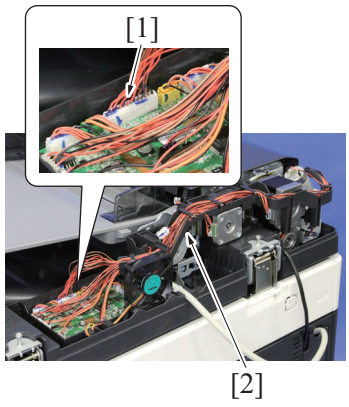

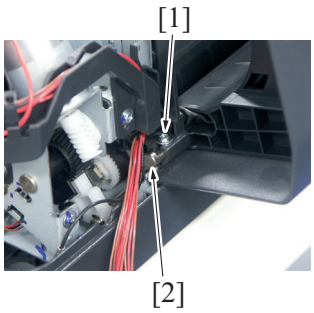


4. Remove the screw [1], and remove the shaft [2].

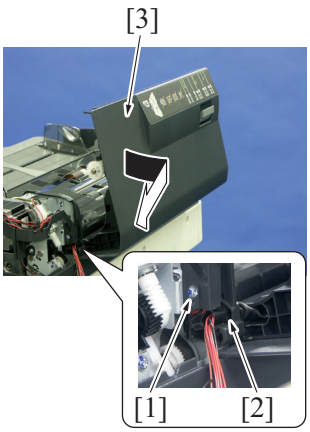


5. Remove the screw [1].
6. Remove the left cover unit [3] as shown in the illustration while pressing the harness into the hole [2] shown in the illustration.

7. To reinstall, reverse the order of removal.

### 6.3.4 Dual scan document feeder (DF-704)

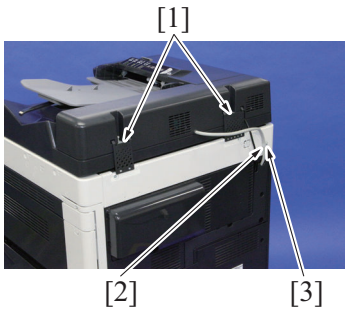


1. Remove two hinge covers [1].
**NOTE**
- **If the cord clamp [2] is installed, remove the screw [3], and remove the cord clamp [2].**

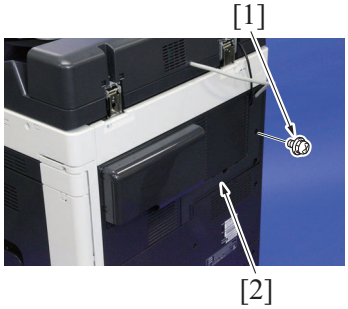


2. Remove the screws [1], and remove the DF cable cover [2] from the back of the main body.

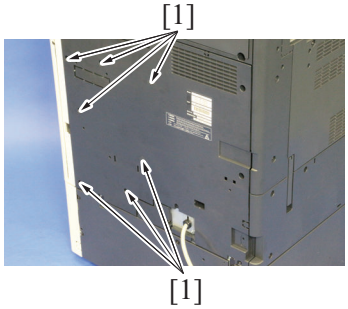


3. Remove seven caps [1].

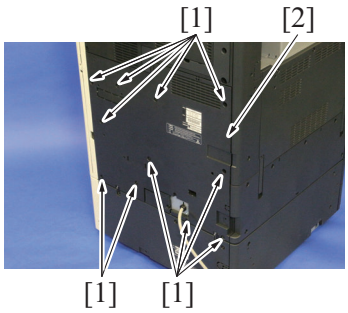


4. Remove 11 screws [1], and remove the lower rear cover [2] from the back of the main body.

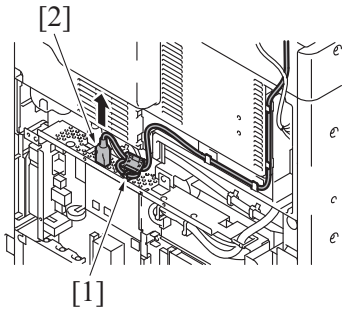


5. Remove the cable from the wire saddle [1], and disconnect the connector [2].

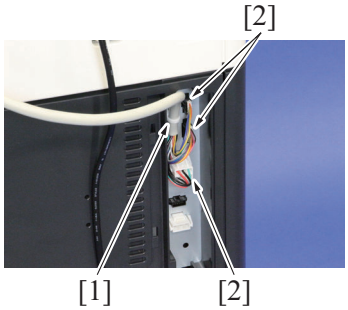


6. Remove the cable tie [1], and disconnect three connectors [2].

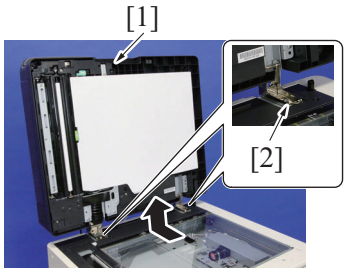


7. Open the dual scan document feeder [1].
   **NOTE**
   - **If the reverse automatic document feeder is set to be lifted up at angles up to 60 degrees due to the set position of the stopper for the hinge, change the set position to the lower side so that the reverse automatic document feeder can be opened completely.**
8. Remove two screws [2].
9. Remove the dual scan document feeder [1].

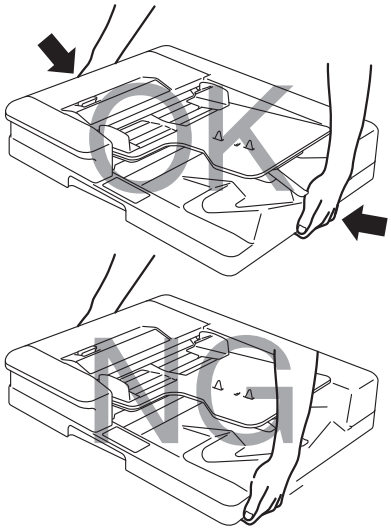


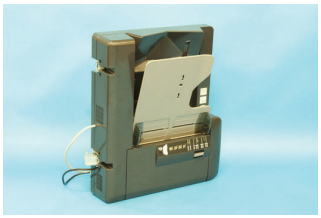

**NOTE**
- **When carrying the dual scan document feeder, be sure to hold onto the specified positions. The feeder main body can be distorted if held at inappropriate positions.**
- **After removing the dual scan document feeder from the machine, place it on the floor or the like as shown in the illustration.**

*10.* To reinstall, reverse the order of removal.

### 6.3.5 Front side glass cleaning roller unit (DF-704)

*1.* Remove the front cover.
G.6.3.1 Front cover (DF-704)
*2.* Remove the dual scan document feeder.
G.6.3.4 Dual scan document feeder (DF-704)

*3.* Place the dual scan document feeder vertically as shown in the illustration.



*4.* Remove the C-clip [1] and the bushing [2].

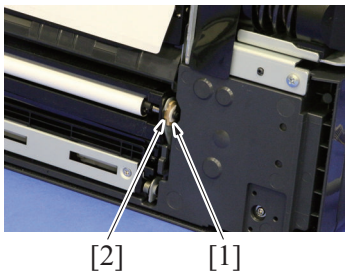

5. Remove the C-clip [1], and shift the bushing [2], and remove the belt [3].
6. Remove the front side glass cleaning roller unit [4].

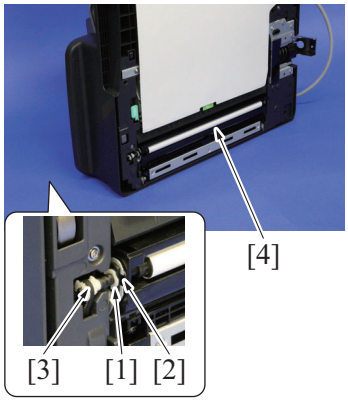


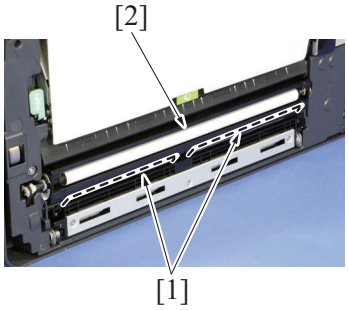


**NOTE**
- **When installing the glass cleaning roller unit [2], make sure that the transparent sheets [1] are outside of the glass cleaning roller unit [2].**

7. To reinstall, reverse the order of removal.

**NOTE**
- **When installing the front side glass cleaning roller unit, the following adjustment is necessary.**
- **Adjust the actuator [1] so that it is positioned where it blocks the light of the document reading glass cleaning sensor [2], and install the belt.**

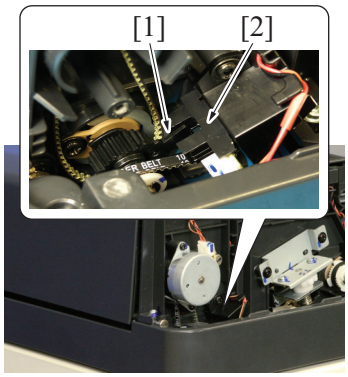


- **After completing the above adjustment, when you turn ON the main power switch, make sure that the shaft [1] is at the correct position (home position).**

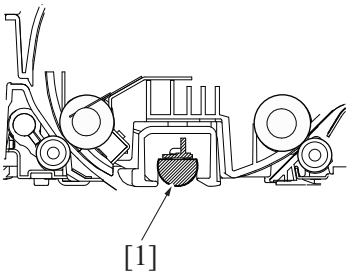


### 6.3.6 Back side glass cleaning roller unit (DF-704)

1. Open the dual scan document feeder.

2. Open the opening and closing guide [1].

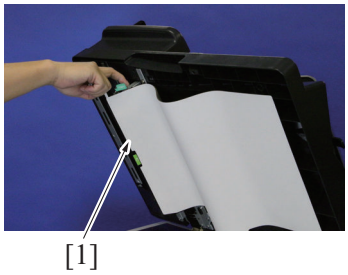


3. While peeling off the mat, remove the screw [1], and while opening the opening and closing guide, remove the cover [2].

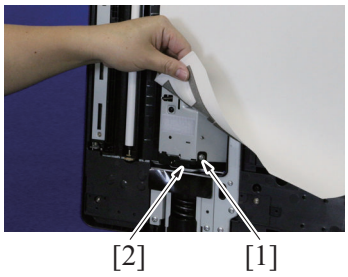


4. Remove the screw [1] and E-ring [2], and remove the bushing [3].

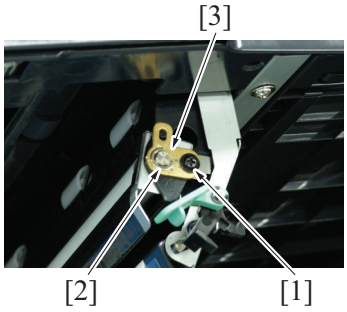


**NOTE**

- **When installing the bushing [3], place the dowel [1] in the middle of the slot [2].**

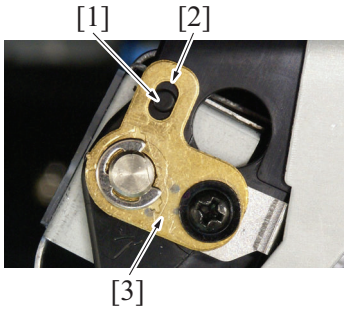


5. Remove the E-ring [1].
6. Remove the gear [2], and remove the belt [3].
7. Remove the bushing [4].
8. Remove the back side glass cleaning roller unit [5].

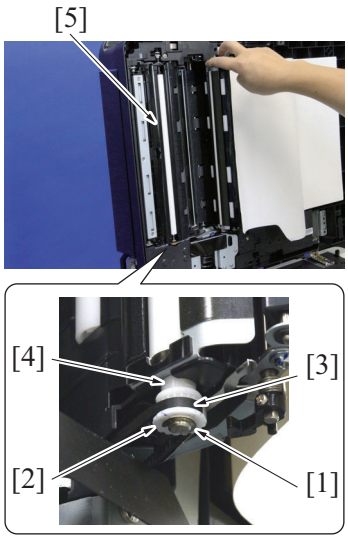

9. To reinstall, reverse the order of removal.

**NOTE**

- **When installing the back side glass cleaning roller unit, the following adjustment is necessary.**
  - **Align the D cut surface [2] of the shaft with the lines [1] marked on the bushing.**

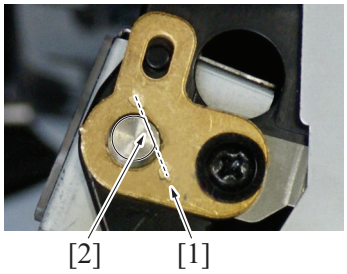


  - **When installing the belt, align the line [1] on the pulley and the line [2] on the transport guide.**

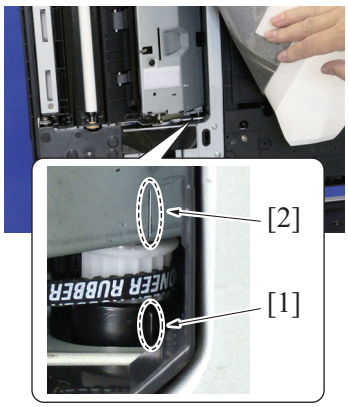


### 6.3.7 CIS module (CIS) (DF-704)

1. Remove the front cover.
   G.6.3.1 Front cover (DF-704)
2. Remove the rear cover.
   G.6.3.2 Rear cover (DF-704)

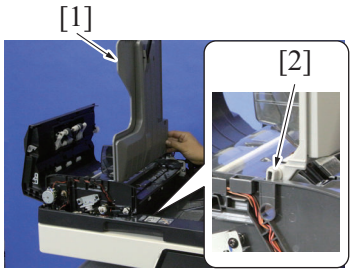


3. Lift up the document feed tray [1].
4. Remove the claw [2] at the front side, and set the document feed tray [1] off the working area.

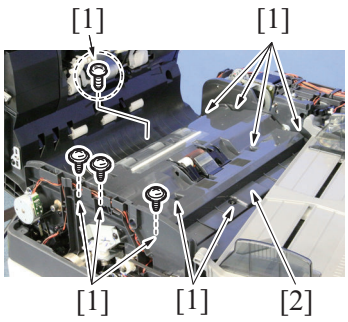


5. Remove 10 screws [1], and remove the transport guide [2].
   **NOTE**
   - **Use care when mounting the screw [1] in the dashed circle (one on the left when looking from the front) since it is different from other nine screws [1].**

6. Remove the screw [1], and disconnect two connectors [2].

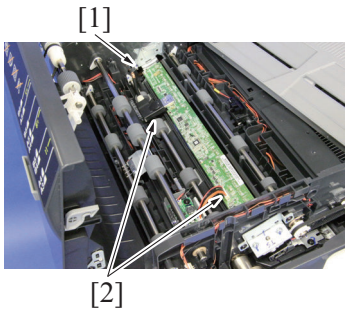


7. Remove two screws (front side) [1].

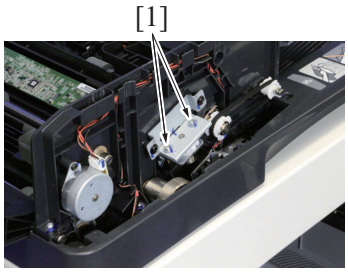


8. Remove two screws (rear side) [1].

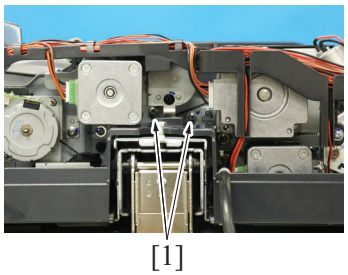


9. Remove the CIS module [1] as shown in the illustration.

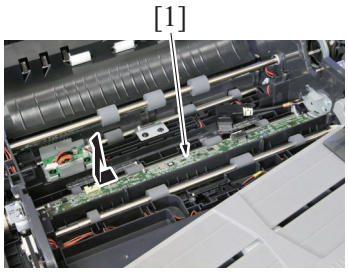


10. Remove the E-ring [1] on the right and left and remove the metal set [2].

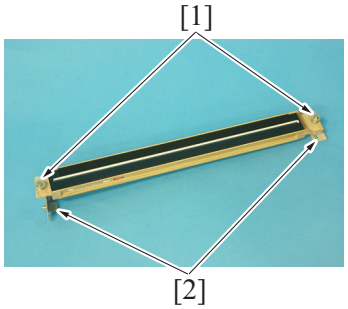


11. To reinstall, reverse the order of removal.

**NOTE**

- **Be sure to perform the following steps after the CIS module has been replaced with a new one.**
- **Adjust the back side skew feed on the ADF.**
  **I.13.1.3 Adjusting back side skew feed on ADF**
- **Execute [Service Mode] -> [System 2] -> [CCD Calibration].**
  **I.5.16.7 CCD Calibration**
- **Execute [Service Mode] -> [System 2] -> [Line Mag Setting].**
  **I.5.16.11 Line Mag Setting**

- **Execute [Service Mode] -> [ADF] -> [Auto Stop Position Adjustment] -> [Sub Scanning Direction 2-Side].**
  **I.5.21.3.(2).(b) Sub Scanning Direction 2-Side**
- **Execute [Service Mode] -> [ADF] -> [Auto Stop Position Adjustment] -> [Main Scanning (Back)].**
  **I.5.21.3.(2).(d) Main Scanning (Back)**
- **Execute [Service Mode] -> [ADF] -> [FD-Mag. Adj. (B)].**
  **I.5.21.12 FD-Mag. Adj. (B)**
- **Execute [Service Mode] -> [ADF] -> [Main Scanning Direction Zoom].**
  **I.5.21.13 Main Scanning Direction Zoom**

### 6.3.8 DF control board (DFCB) (DF-704)

1. Remove the rear cover.
   G.6.3.2 Rear cover (DF-704)

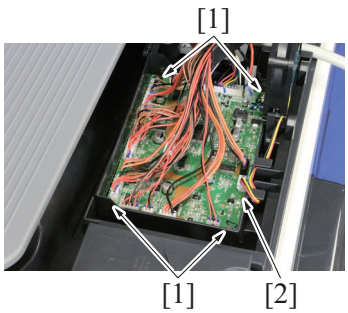


2. Disconnect all the seventeen connectors from the DF control board.
3. Remove four screws [1], and remove the DF control board [2].
4. To reinstall, reverse the order of removal.

**NOTE**

- **Be sure to perform the following steps after the DF control board has been replaced with a new one.**
- **Install the firmware.**
- **Execute [Service Mode] -> [ADF] -> [Original Tray Width].**
  **I.5.21.6 Original Tray Width**
- **Execute [Service Mode] -> [ADF] -> [Mixed original Size adjustment].**
  **I.5.21.10 Mixed original size adjustment**

### 6.3.9 Document width size sensor (VR1) (DF-704)

1. Remove the rear cover.
   G.6.3.2 Rear cover (DF-704)

2. Lift up the document feed tray [1].

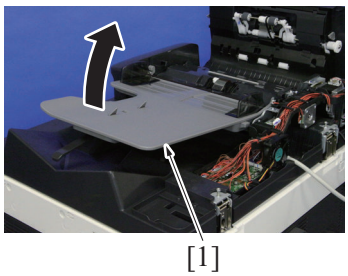


3. Remove the lever for document exit [1].
4. Remove six screws [2] and remove the cover [3].

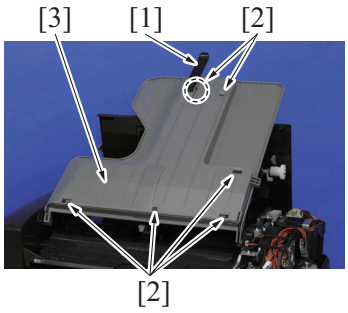

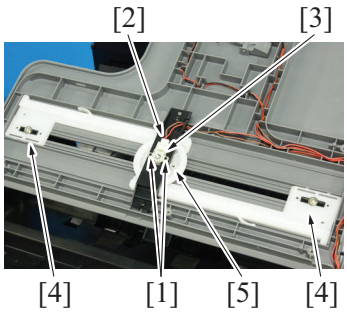


5. Remove two screws [1] and disconnect the connector [2], and remove the document width size sensor [3].
**NOTE**
- **For mounting the document width size sensor, widen the side edge stop [4] of the document feed tray fully and make sure that the round hole [5] of the gear is at the position as shown on the illustration.**

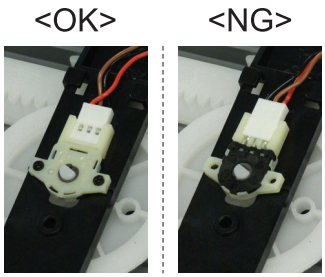


**NOTE**
- **For mounting the document width size sensor, mount it in the direction shown on the illustration.**

6. To reinstall, reverse the order of removal.

**NOTE**
- **Be sure to perform the following operation when the document width size sensor is replaced.**
- **Execute [Service Mode] -> [ADF] -> [Original Tray Width].**
  **I.5.21.6 Original Tray Width**
- **Turn OFF the main power switch and turn it ON again and check whether size detection operates normally.**

### 6.3.10 CIS power supply (CISPU) (DF-704)

1. Remove the front cover.
   G.6.3.1 Front cover (DF-704)
2. Remove the rear cover.
   G.6.3.2 Rear cover (DF-704)

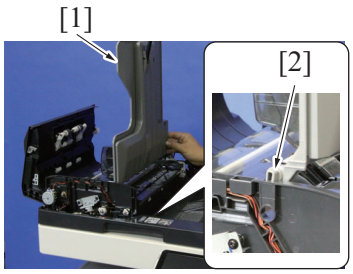


3. Lift up the document feed tray [1].
4. Remove the claw [2] at the front side, and set the document feed tray [1] off the working area.

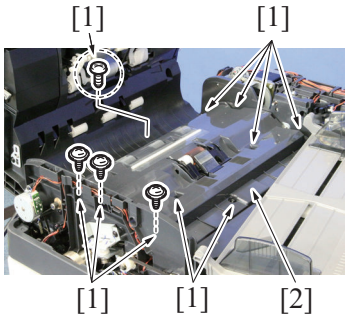


5. Remove 10 screws [1], and remove the transport guide [2].
**NOTE**
- **Use care when mounting the screw [1] in the dashed circle (one on the left when looking from the front) since it is different from other nine screws [1].**

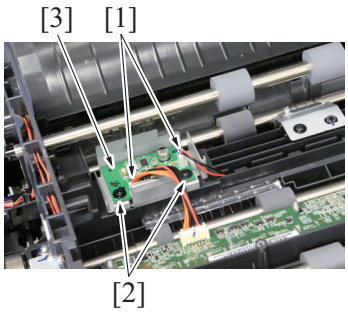


6. Disconnect two connectors [1].
7. Remove two screws [2], and remove the CIS power supply [3].

8. To reinstall, reverse the order of removal.

### 6.3.11 Dual scan board (DSIPB) (DF-704)

1. Remove the lower rear cover of the main body.
   G.5.2.20 Lower rear cover
2. Remove the DSC board/2 (for back side). (Option)
   G.6.13.2 DSC board/2 (for back side) (SC-508)

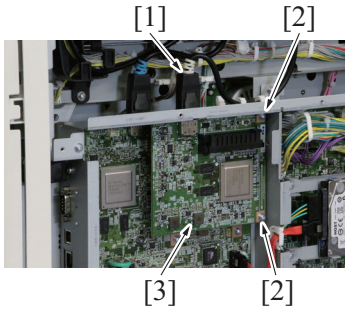


3. Disconnect the connector [1].
4. Remove two screws [2], and remove the dual scan board [2].

5. To reinstall, reverse the order of removal.

### 6.3.12 Document reading motor (M1) (DF-704)

#### (1) Remove procedure

1. Remove the rear cover.
   G.6.3.2 Rear cover (DF-704)
2. Remove the reading roller release motor.
   G.6.3.15 Reading roller release motor (M4) (DF-704)

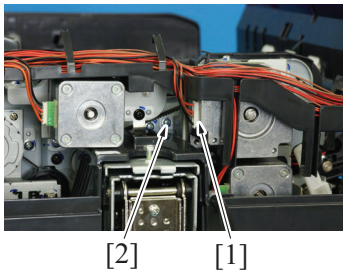


3. Disconnect the connector [1].
4. Remove the screw [2].

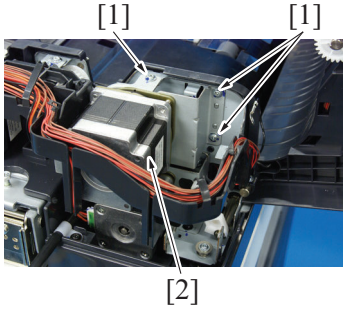


5. Remove three screws [1], and remove the document reading motor assy [2].

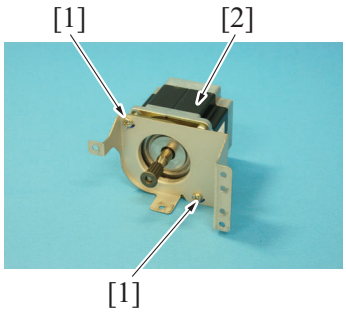


6. Remove two screws [1], and remove the document reading motor [2].

**(2) Reinstall procedure**

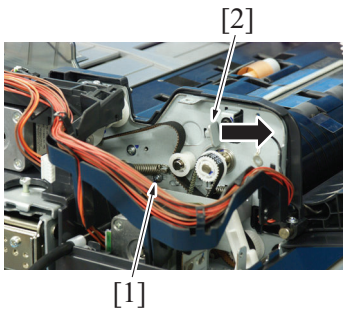


1. Loosen the screw [1] and move the tension plate [2] in the direction of the arrow to reduce the belt tension.
2. Tighten the screw [1].

3. Install the document reading motor assy with four screws.

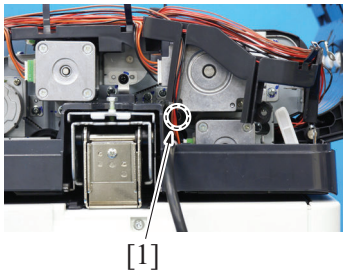


4. Loosen the screw [1] and apply tension to the belt.
5. Tighten the screw [1].

6. To reinstall, reverse the order of removal.

### 6.3.13 Document feed motor (M2) (DF-704)

1. Remove the rear cover.
G.6.3.2 Rear cover (DF-704)

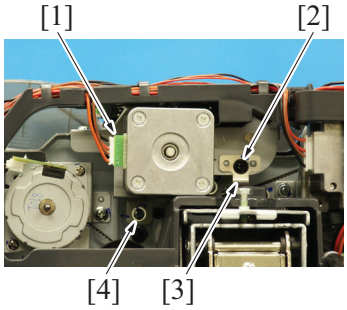


2. Disconnect the connector [1].
3. Remove the screw [2], and remove the earth plate [3].
4. Remove the screw [4].

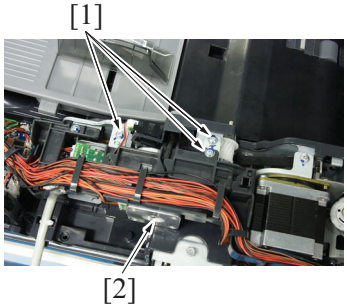


5. Remove three screws [1], and remove the document feed motor assy [2].

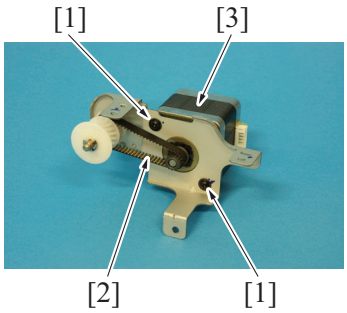


6. Remove two screws [1] and belt [2], and remove the document feed motor [2].

7. To reinstall, reverse the order of removal.

### 6.3.14 Registration motor (M3) (DF-704)

1. Remove the rear cover.
   G.6.3.2 Rear cover (DF-704)
2. Remove the reading roller release motor.
   G.6.3.15 Reading roller release motor (M4) (DF-704)
3. Remove the document reading motor.
   G.6.3.12 Document reading motor (M1) (DF-704)

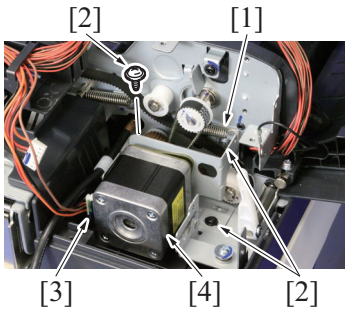


4. Remove the spring [1], and remove three screws [2].
5. Disconnect the connector [3], and remove the registration motor assy [4].

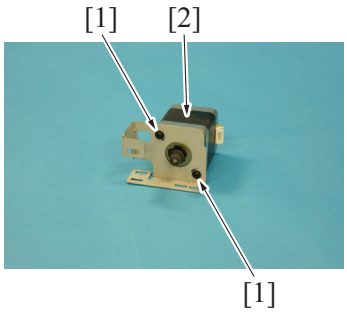


6. Remove two screws [1], and remove the registration motor [2].

7. To reinstall, reverse the order of removal.

### 6.3.15 Reading roller release motor (M4) (DF-704)

1. Remove the rear cover.
   G.6.3.2 Rear cover (DF-704)

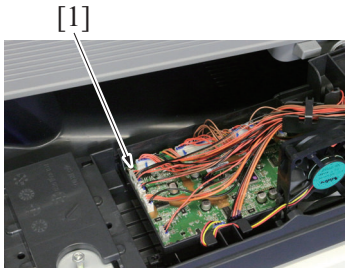


2. Disconnect the connector (J18) [1] on the DF control board.

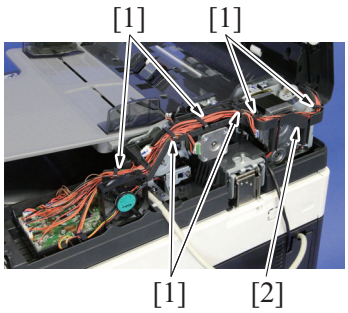


3. Remove six wire saddles [1] and remove the harness from the harness guide [2].

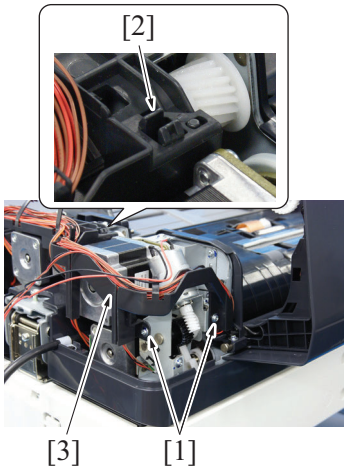


4. Remove two screws [1] and a claw [2], and move the harness guide [3] off the working area.

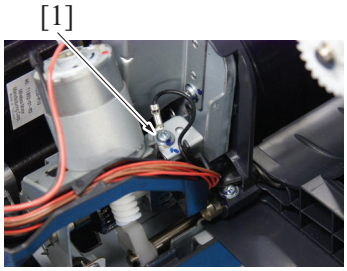


5. Remove the screw [1].

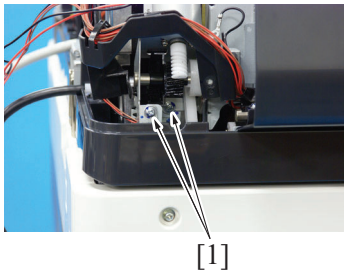


6. Remove two screws [1].

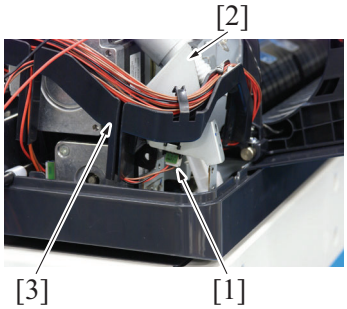


7. Disconnect the connector [1], and remove the reading roller release motor assy [2].
8. Remove the harness from the harness guide [3].

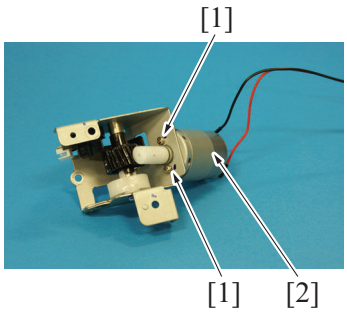


9. Remove two screws [1], and remove the reading roller release motor [2].

10. To reinstall, reverse the order of removal.

### 6.3.16 CIS cleaning motor (M5) (DF-704)

1. Remove the rear cover.
G.6.3.2 Rear cover (DF-704)

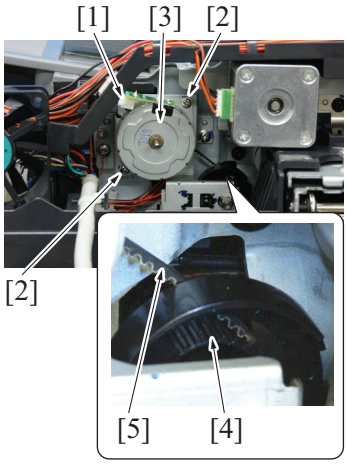


2. Disconnect the connector [1].
3. Remove two screws [2], and remove the CIS cleaning motor [3].
**NOTE**
- **When mounting it, make sure to set the belt [5] to the gear [4] on the pulley firmly.**

4. To reinstall, reverse the order of removal.

### 6.3.17 Document reading glass cleaning motor (M6) (DF-704)

1. Remove the front cover.
G.6.3.1 Front cover (DF-704)

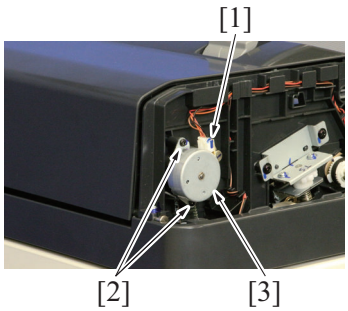


2. Disconnect the connector [1].
3. Remove two screws [2], and remove the document reading glass cleaning motor [3].

4. To reinstall, reverse the order of removal.

### 6.3.18 DF cooling fan motor (FM1) (DF-704)

1. Remove the rear cover.
G.6.3.2 Rear cover (DF-704)

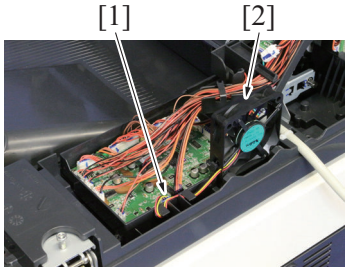


2. Disconnect the connector [1].
3. Remove the DF cooling fan motor [2].

4. To reinstall, reverse the order of removal.

### 6.3.19 CIS cable (DF-704)

1. Remove the front cover.
   G.6.3.1 Front cover (DF-704)
2. Remove the rear cover.
   G.6.3.2 Rear cover (DF-704)
3. Remove the reading roller release motor.
   G.6.3.15 Reading roller release motor (M4) (DF-704)
4. Remove the CIS cleaning motor.
   G.6.3.16 CIS cleaning motor (M5) (DF-704)
5. Remove the CIS module.
   G.6.3.7 CIS module (CIS) (DF-704)

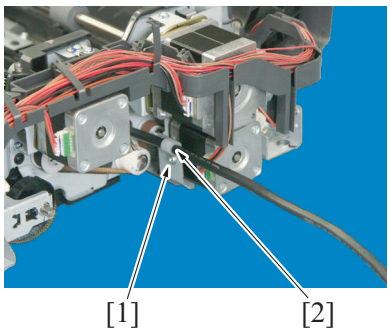


6. Remove one screw [1]. Then, remove the wire saddle [2] from the CIS cable.

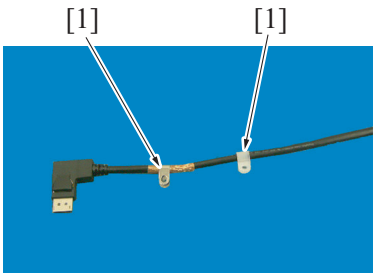


7. Remove the CIS cable.
   **NOTE**
   - **If the CIS cable is to be replaced with a new one, remove the two wire saddles [1] that are attached to the old CIS cable and attach them to the new cable.**
   - **Attach the wire saddles at the same positions as those at which they were attached.**

8. To reinstall, reverse the order of removal.

### 6.3.20 Stamp unit (SP-501)

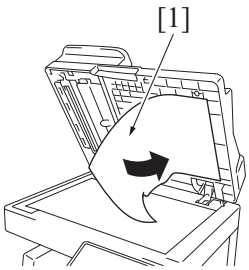


1. Peel off the mat (at two places on the left) [1].

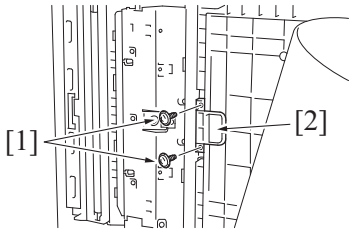


2. Remove the two screws [1], and remove the cover [2].

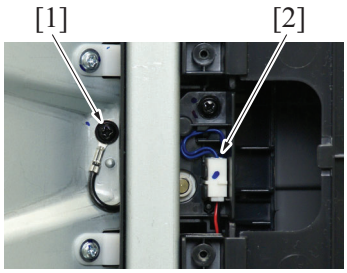


3. Remove the screw [1].
4. Remove the harness and disconnect the connector [2].

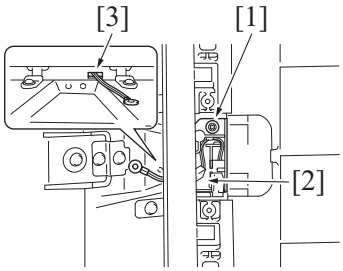


5. Remove the screw [1], and remove the guide plate [2].
**NOTE**
- **When mounting it, set the ground terminal through the hole [3] shown on the illustration.**

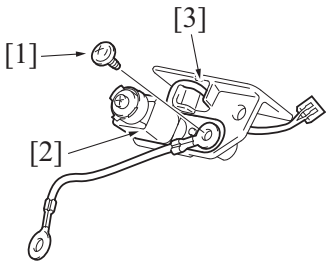


6. Remove the screw [1] and remove the stamp unit [2].
**NOTE**
- **When mounting it, set the harness through the hole [3] shown on the illustration.**
- **Ensure that the ground terminal is on the upper side of the mounting bracket of stamp unit.**

7. To reinstall, reverse the order of removal.

### 6.3.21 Stamp (SP-501)

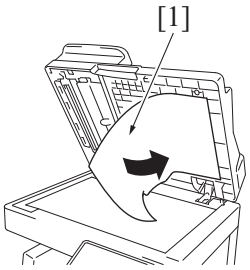


1. Peel off the mat (at two places on the left) [1].

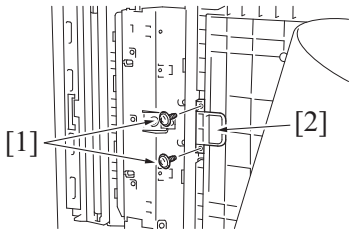


2. Remove the two screws [1], and remove the cover [2].

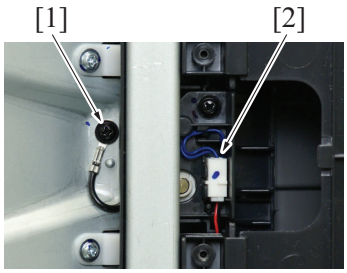


3. Remove the screw [1].
4. Remove the harness and disconnect the connector [2].

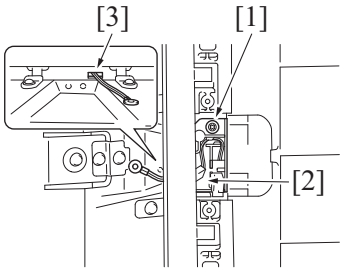


5. Remove the screw [1], and remove the guide plate [2].
**NOTE**
- **When mounting it, set the ground terminal through the hole [3] shown on the illustration.**

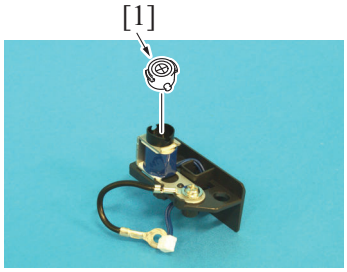


6. Remove the used stamp, and install the new stamp of replacement [1].
**NOTE**
- **Align the round pin of the stamp with the slit in the stamp unit side.**

7. To reinstall, reverse the order of removal.

## 6.4 Disassembly/reassembly procedure (PC-110/PC-210)

### 6.4.1 Right door (PC-110/PC-210)

1. Open the right door.

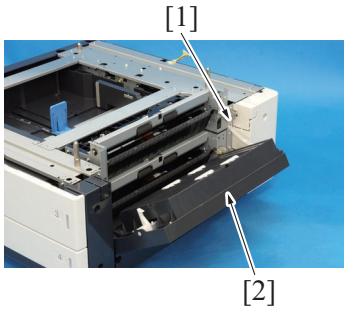


2. Remove the screw [1], and remove the right door [2].

3. To reinstall, reverse the order of removal.

### 6.4.2 Rear right cover (PC-110/PC-210)

1. Remove two screws [1], and remove the rear right cover [2].

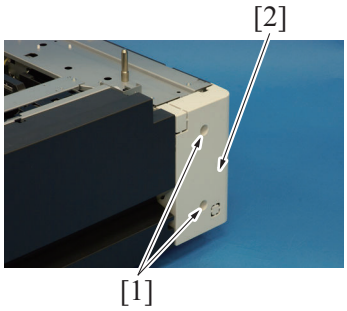


2. To reinstall, reverse the order of removal.

### 6.4.3 Rear cover (PC-110/PC-210)

1. Remove five screws [1], and remove the rear cover [2].

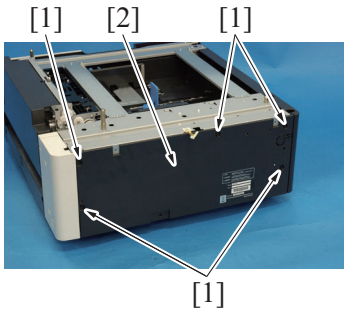


2. To reinstall, reverse the order of removal.

### 6.4.4 Tray 3, tray 4 (PC-110/PC-210)

**NOTE**

- **The tray 3 and the tray 4 are of the same form and mechanism. This procedure shows the steps taken for the tray 3.**

1. Slide out the tray 3, and remove the paper.
2. Remove the screw [1], and remove the stopper [2].

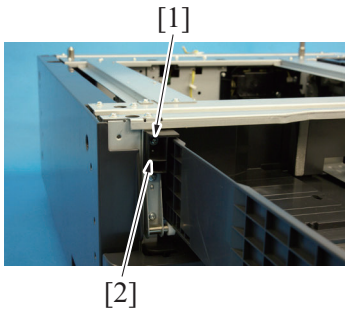


3. Hold up the tray 3 to remove it.

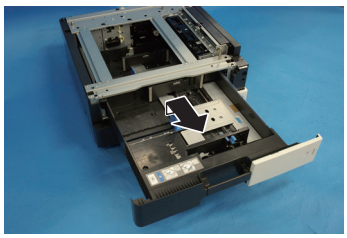

4. To reinstall, reverse the order of removal.

### 6.4.5 Paper feed cabinet (PC-110/PC-210)

# ⚠CAUTION

- When holding the transportation handles, be careful not to catch your fingers in the main body.

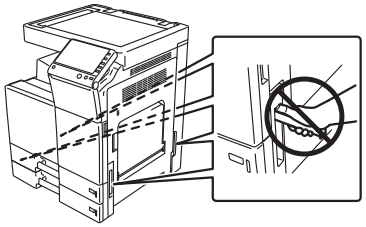

1. Slide out the tray 2 and tray 3.

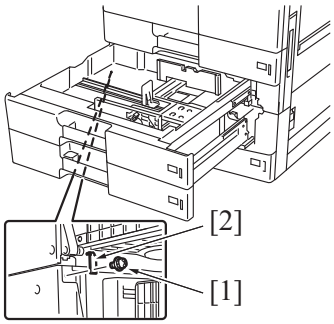


2. Remove the screw [1], and remove the fixing bracket [2].

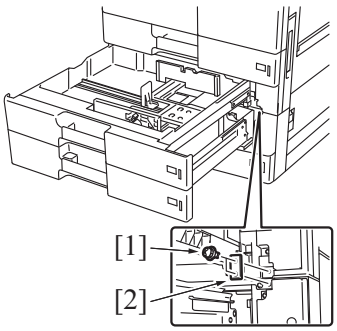


3. Remove two screws [1], and remove the fixing bracket [2].

4. Slide the tray 2 and tray 3 back in.

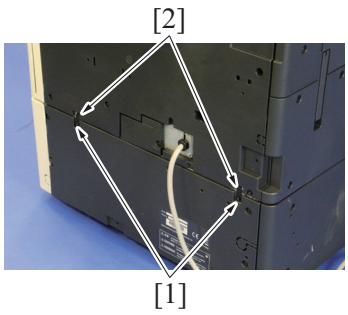


5. Remove two screws [1], and remove two fixing brackets [2].

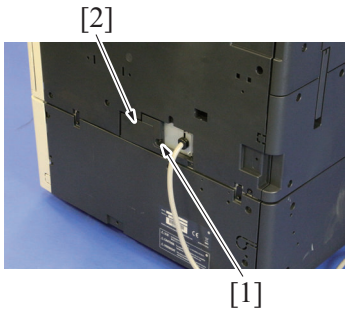


6. Remove the screw [1], and remove the rear under cover [2].

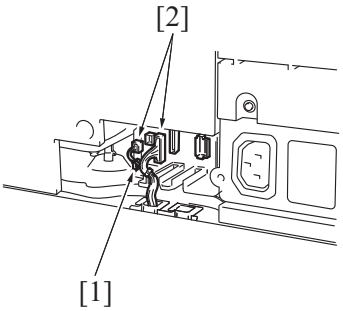


7. Remove the harness from the wire saddle [1].
8. Disconnect two connectors [2].

9. Pull out the transportation handles.

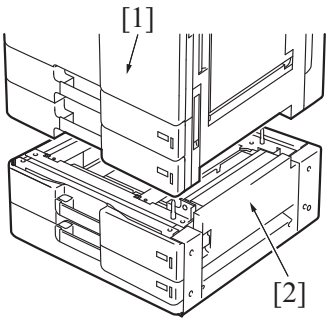


10. Hold the transportation handles at the right and left of the main body, and lift the main body [1] and then remove the paper feed cabinet [2].
**NOTE**
- **When transporting or moving the main body, assign adequate number of persons.**

### 6.4.6 Tray 3 paper feed unit (PC-110/PC-210)

1. Remove the right door.
G.6.4.1 Right door (PC-110/PC-210)
2. Remove the rear right cover.
G.6.4.2 Rear right cover (PC-110/PC-210)
3. Slide out the tray 3.

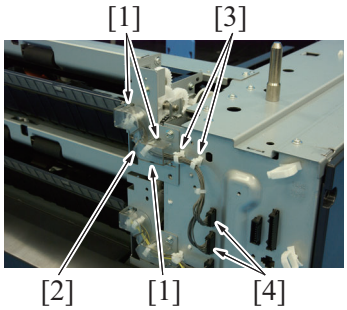


4. Remove three tabs [1], and remove the harness cover [2].
5. Remove the harness from two wire saddles [3].
6. Disconnect two connectors [4].

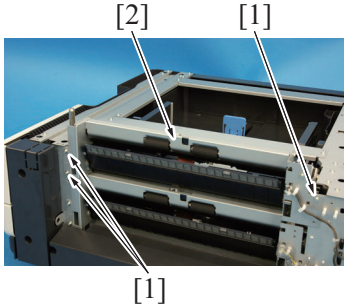


7. Remove three screws [1], and remove the tray 3 paper feed unit [2].

8. To reinstall, reverse the order of removal.

### 6.4.7 Tray 4 paper feed unit (PC-210)

1. Remove the right door.
   G.6.4.1 Right door (PC-110/PC-210)
2. Remove the rear right cover.
   G.6.4.2 Rear right cover (PC-110/PC-210)
3. Slide out the tray 4.

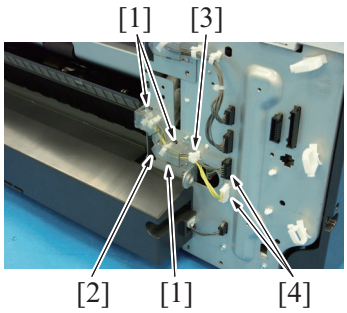


4. Remove three tabs [1], and remove the harness cover [2].
5. Remove the harness from the wire saddle [3].
6. Disconnect two connectors [4].

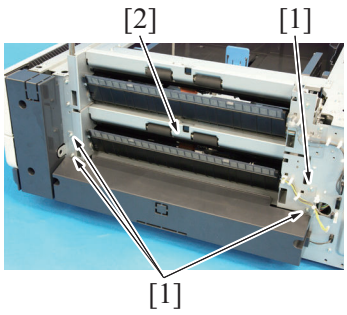


7. Remove four screws [1], and remove the tray 4 paper feed unit [2].

8. To reinstall, reverse the order of removal.

### 6.4.8 PC control board (PCCB) (PC-110/PC-210)

1. Remove the rear cover.
   G.6.4.3 Rear cover (PC-110/PC-210)

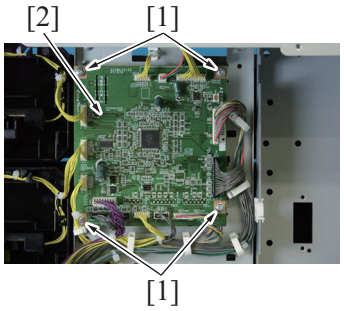


2. Disconnect all connectors on the PC control board.
3. Remove four screws [1], and remove the PC control board [2].

4. To reinstall, reverse the order of removal.

### 6.4.9 Tray 3 paper empty indicator board (PEIB/3), tray 4 paper empty indicator board (PEIB/4) (PC-110/PC-210)

**NOTE**

- **The tray 3 paper empty indicator board and the tray 4 paper empty indicator board are of the same form and mechanism. This procedure shows the steps taken for the tray 3 paper empty indicator board.**

1. Slide out the tray 3.
2. Slide out the tray 4.

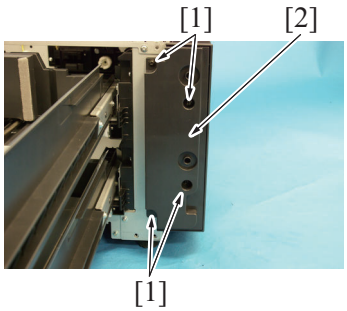


3. Remove four screws [1], and remove the right front cover [2].

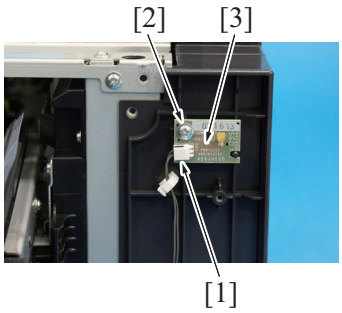


4. Disconnect the connector [1].
5. Remove the screw [2], and remove the tray 3 paper empty indicator board [3].
6. To reinstall, reverse the order of removal.

### 6.4.10 Tray 3 FD paper size board (FDPSB/3), tray 4 FD paper size board (FDPSB/4) (PC-110/PC-210)

**NOTE**

- **The tray 3 FD paper size board and the tray 4 FD paper size board are of the same form and mechanism. This procedure shows the steps taken for the tray 3 FD paper size board.**

1. Remove the tray 3.
   G.6.4.4 Tray 3, tray 4 (PC-110/PC-210)
2. Remove the tray 4.
   G.6.4.4 Tray 3, tray 4 (PC-110/PC-210)

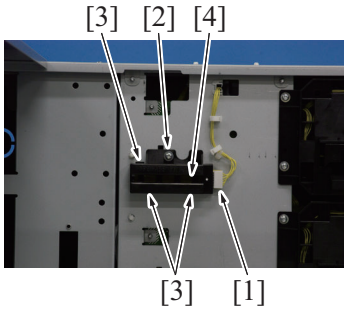


3. Disconnect the connector [1].
4. Remove the screw [2] and three tabs [3], and remove the tray 3 FD paper size board assy [4].

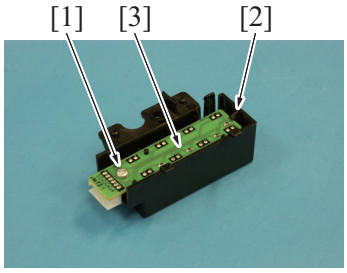


5. Remove the screw [1] and the tab [2], and remove the tray 3 FD paper size board [3].
6. To reinstall, reverse the order of removal.

### 6.4.11 Tray 3 CD paper size board (CDPSB/3) (PC-110/PC-210)

1. Remove the rear cover.
   G.6.4.3 Rear cover (PC-110/PC-210)

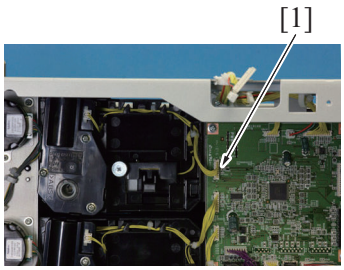


2. Disconnect the connector [1] on the PC control board.
3. Remove the tray 3.
   G.6.4.4 Tray 3, tray 4 (PC-110/PC-210)
4. Remove the tray 4.
   G.6.4.4 Tray 3, tray 4 (PC-110/PC-210)

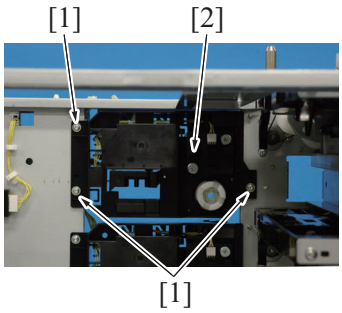


5. Remove three screws [1], and remove the tray 3 lift-up motor assy [2].

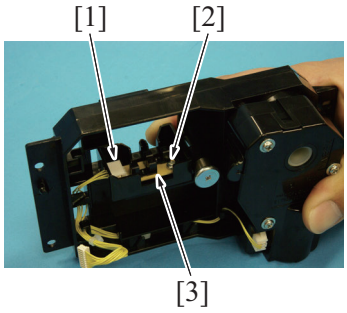


6. Disconnect the connector [1].
7. Remove the screw [2], and remove the tray 3 CD paper size board [3].

8. To reinstall, reverse the order of removal.

### 6.4.12 Tray 4 CD paper size board (CDPSB/4) (PC-210)

1. Remove the rear cover.
G.6.4.3 Rear cover (PC-110/PC-210)

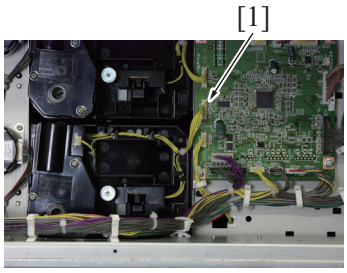


2. Disconnect the connector [1] on the PC control board.

3. Remove the tray 3 and tray 4.
G.6.4.4 Tray 3, tray 4 (PC-110/PC-210)

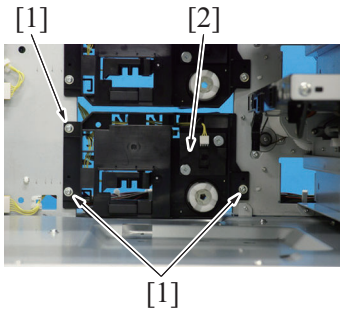


4. Remove three screws [1], and remove the tray 4 lift-up motor assy [2].

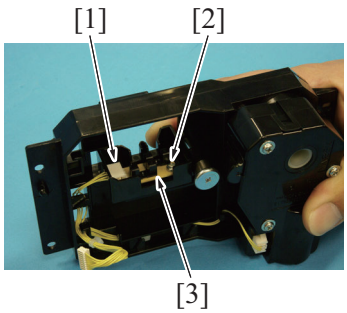


5. Disconnect the connector [1].
6. Remove the screw [2], and remove the tray 4 CD paper size board [3].

7. To reinstall, reverse the order of removal.

### 6.4.13 Tray 3 paper feed motor (M111), tray 4 paper feed motor (M121) (PC-110/PC-210)

**NOTE**

- **The tray 3 paper feed motor and the tray 4 paper feed motor are of the same form and mechanism. This procedure shows the steps taken for the tray 3 paper feed motor.**

1. Remove the rear cover.
   G.6.4.3 Rear cover (PC-110/PC-210)

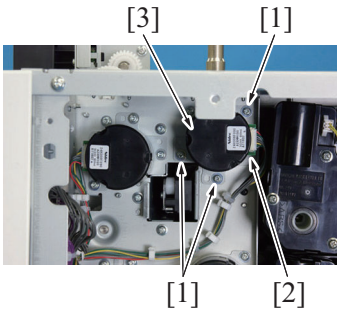


2. Remove three screws [1].
3. Disconnect the connector [2], and remove the tray 3 paper feed motor assy [3].
   **NOTE**
   - **When mounting the tray 3 paper feed motor assy, use care not to forget to set the belt to the gear.**

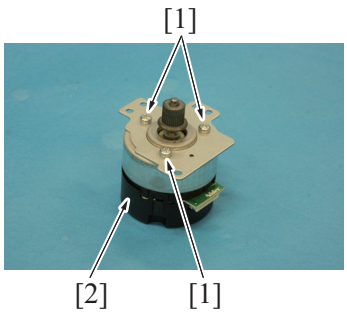


4. Remove three screws [1], and remove the tray 3 paper feed motor [2].

5. To reinstall, reverse the order of removal.

### 6.4.14 Tray 3 vertical transport motor (M112), tray 4 vertical transport motor (M122) (PC-110/PC-210)

**NOTE**

- **The tray 3 vertical transport motor and the tray 4 vertical transport motor are of the same form and mechanism. This procedure shows the steps taken for the tray 3 vertical transport motor.**

1. Remove the rear cover.
   G.6.4.3 Rear cover (PC-110/PC-210)

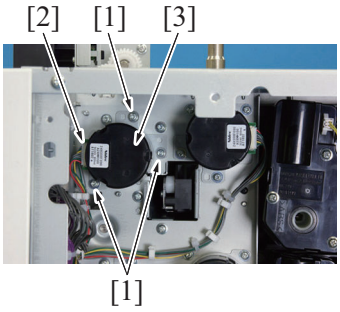


2. Remove three screws [1].
3. Disconnect the connector [2], and remove the tray 3 vertical transport motor assy [3].
   **NOTE**
   - **When mounting the tray 3 vertical transport motor assy, use care not to forget to set the belt to the gear.**

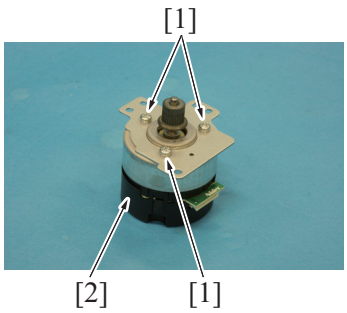


4. Remove three screws [1], and remove the tray 3 vertical transport motor [2].

5. To reinstall, reverse the order of removal.

### 6.4.15 Tray 3 lift-up motor (M113), tray 4 lift-up motor (M123) (PC-110/PC-210)

**NOTE**

- **The tray 3 lift-up motor and the tray 4 lift-up motor are of the same form and mechanism. This procedure shows the steps taken for the tray 3 lift-up motor.**

1. Remove the rear cover.
   G.6.4.3 Rear cover (PC-110/PC-210)

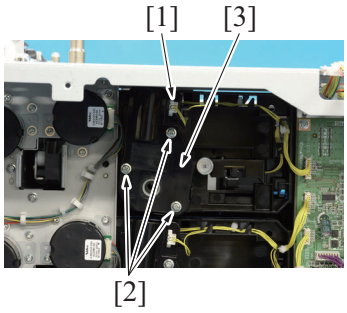


2. Disconnect the connector [1].
3. Remove three screws [2], and remove the tray 3 lift-up motor [3].
4. To reinstall, reverse the order of removal.

## 6.5 Disassembly/reassembly procedure (PC-410)

### 6.5.1 Right door (PC-410)

1. Open the right door.

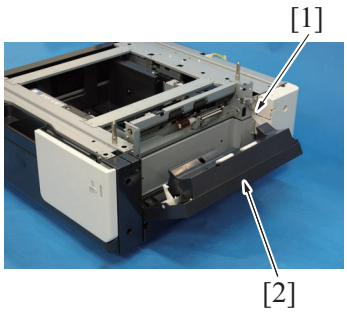


2. Remove the screw [1], and remove the right door [2].
3. To reinstall, reverse the order of removal.

### 6.5.2 Rear right cover (PC-410)

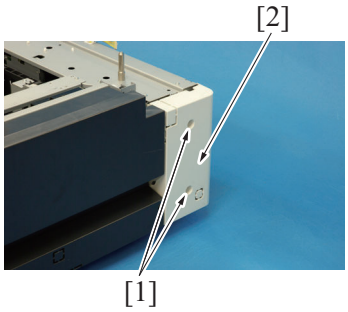


1. Remove two screws [1], and remove the rear right cover [2].
2. To reinstall, reverse the order of removal.

### 6.5.3 Rear cover (PC-410)

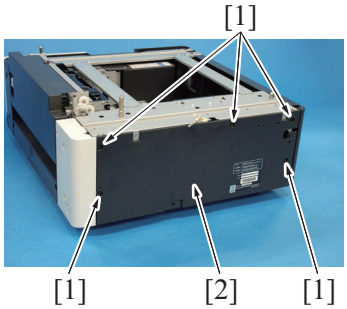


1. Remove five screws [1], and remove the rear cover [2].
2. To reinstall, reverse the order of removal.

### 6.5.4 Paper feed tray (PC-410)

1. Slide out the paper feed tray, and remove the paper.

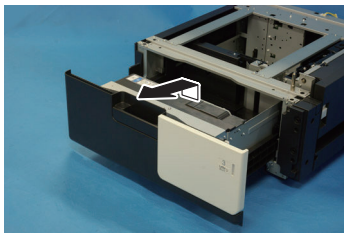

2. Hold up the paper feed tray to remove it.

3. To reinstall, reverse the order of removal.

### 6.5.5 Paper feed cabinet (PC-410)

**CAUTION**

- When holding the transportation handles, be careful not to catch your fingers in the main body.

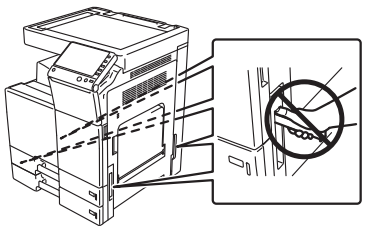

1. Slide out the tray 2 and tray 3.

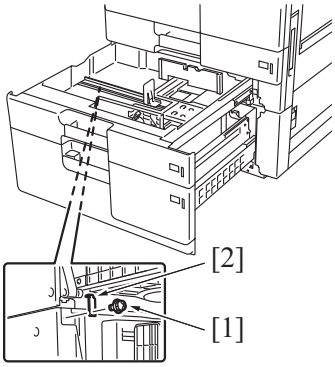


2. Remove the screw [1], and remove the fixing bracket [2].

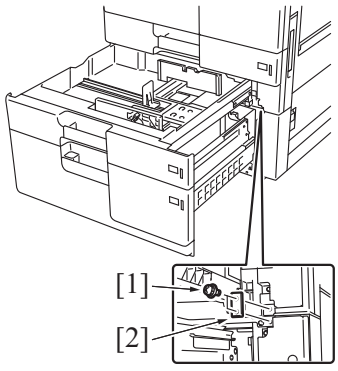


3. Remove two screws [1], and remove the fixing bracket [2].

4. Slide the tray 2 and tray 3 back in.

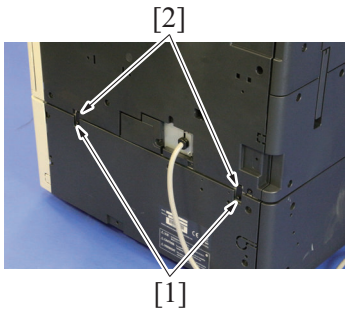


5. Remove two screws [1], and remove two fixing brackets [2].

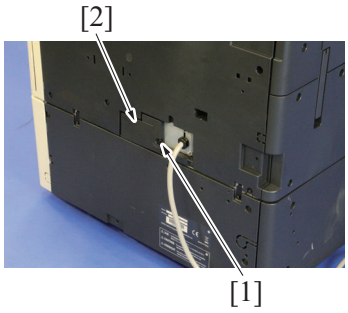


6. Remove the screw [1], and remove the rear under cover [2].

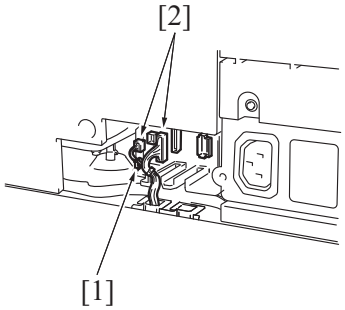


7. Remove the harness from the wire saddle [1].
8. Disconnect two connectors [1].

9. Pull out the transportation handles.

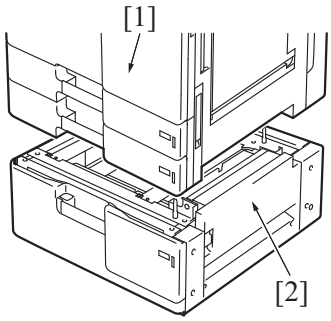


10. Hold the transportation handles at the right and left of the main body, and lift the main body [1] and then remove the paper feed cabinet [2].
**NOTE**
- **When transporting or moving the main body, assign adequate number of persons.**

### 6.5.6 Paper feed unit (PC-410)

1. Remove the right door.
G.6.5.1 Right door (PC-410)
2. Remove the rear right cover.
G.6.5.2 Rear right cover (PC-410)
3. Slide out the paper feed tray.

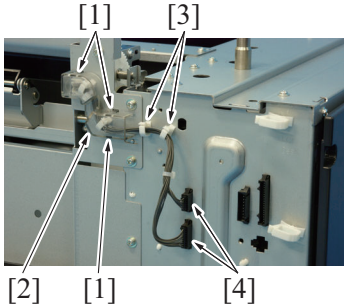


4. Remove three tabs [1], and remove the harness cover [2].
5. Remove the harness from two wire saddles [3].
6. Disconnect two connectors [4].

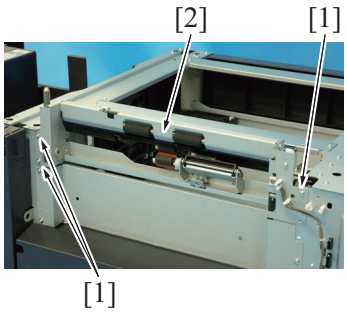


7. Remove three screws [1], and remove the paper feed unit [2].

8. To reinstall, reverse the order of removal.

### 6.5.7 PC control board (PCCB) (PC-410)

1. Remove the rear cover.
G.6.5.3 Rear cover (PC-410)

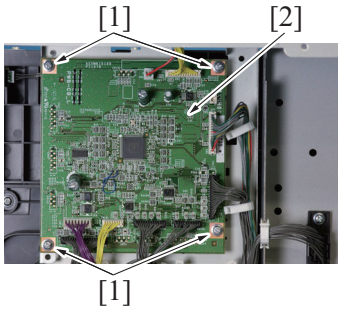


2. Disconnect all connectors on the PC control board.
3. Remove four screws [1], and remove the PC control board [2].

4. To reinstall, reverse the order of removal.

### 6.5.8 Tray 3 paper empty indicator board (PEIB/3) (PC-410)

1. Slide out the paper feed tray.

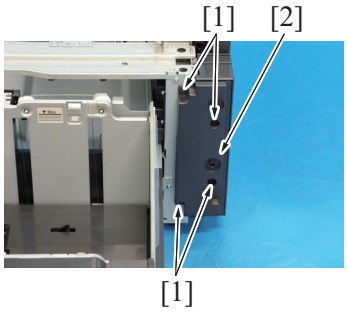


2. Remove four screws [1], and remove the right front cover [2].

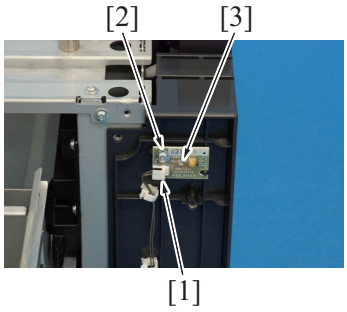


3. Disconnect the connector [1].
4. Remove the screw [2], and remove the tray 3 paper empty indicator board [3].

5. To reinstall, reverse the order of removal.

### 6.5.9 Paper feed motor (M131) (PC-410)

1. Remove the rear cover.
G.6.5.3 Rear cover (PC-410)

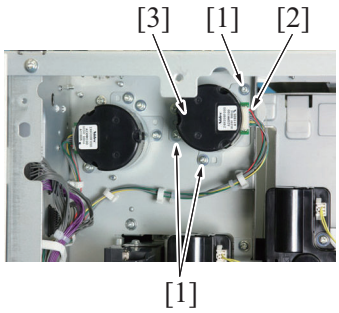


2. Remove three screws [1].
3. Disconnect the connector [2], and remove the paper feed motor assy [3].
   **NOTE**
   - **When mounting the paper feed motor assy, use care not to forget to set the belt to the gear.**

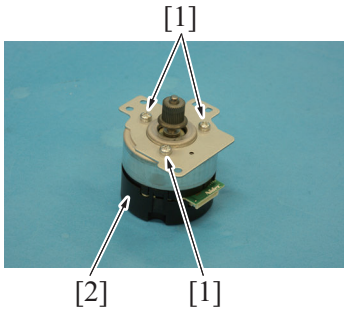


4. Remove three screws [1], and remove the paper feed motor [2].

5. To reinstall, reverse the order of removal.

### 6.5.10 Vertical transport motor (M132) (PC-410)

1. Remove the rear cover.
   G.6.5.3 Rear cover (PC-410)

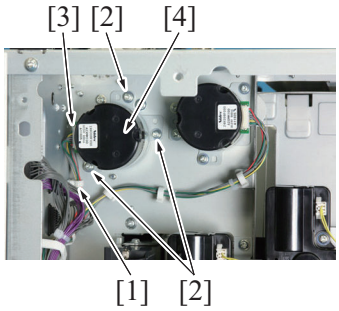


2. Remove the harness from the wire saddle [1].
3. Remove three screws [2].
4. Disconnect the connector [3], and remove the vertical transport motor assy [4].
   **NOTE**
   - **When mounting the vertical transport motor assy, use care not to forget to set the belt to the gear.**

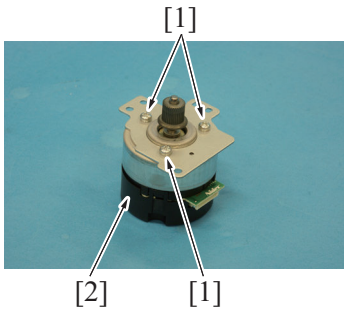


5. Remove three screws [1], and remove the vertical transport motor [2].

6. To reinstall, reverse the order of removal.

### 6.5.11 Elevator motor (M134) (PC-410)

1. Slide out the paper feed tray.
2. Remove the rear cover.
   G.6.5.3 Rear cover (PC-410)

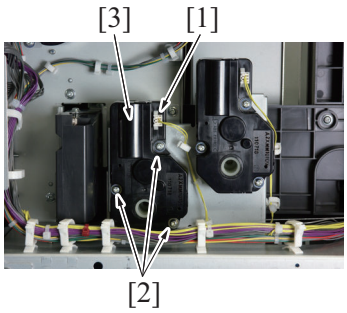


3. Disconnect the connector [1].
4. Remove three screws [2], and remove the elevator motor [3].

5. To reinstall, reverse the order of removal.

### 6.5.12 Shifter motor (M133) (PC-410)

1. Slide out the paper feed tray.
2. Remove the rear cover.
G.6.5.3 Rear cover (PC-410)

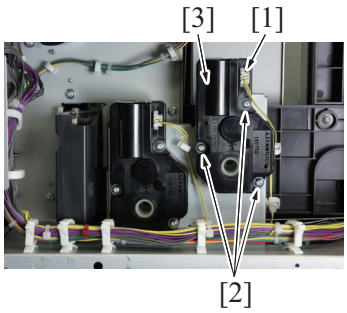


3. Disconnect the connector [1].
4. Remove three screws [2], and remove the shifter motor [3].

5. To reinstall, reverse the order of removal.

### 6.5.13 Wire (PC-410)

1. Slide out the paper feed tray.

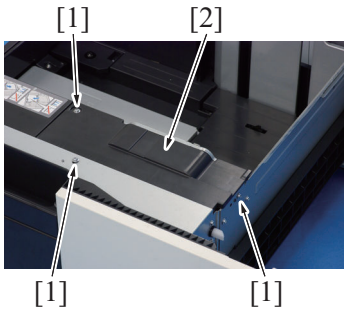


2. Remove three screws [1], and remove the cover [2].

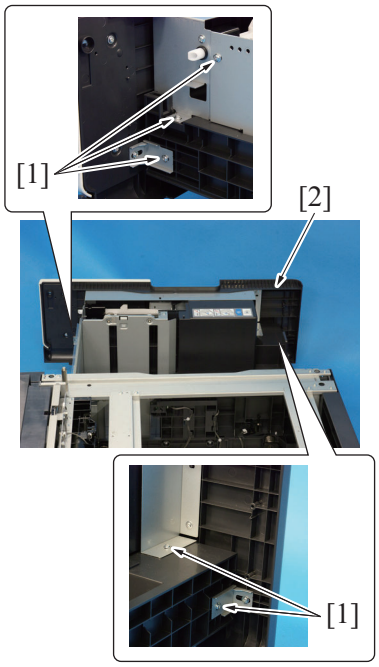


3. Remove five screws [1], and remove the front cover assy [2].

4. Remove the paper feed tray.
G.6.5.4 Paper feed tray (PC-410)

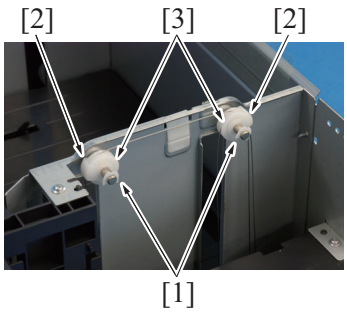


5. Remove two C-rings [1].
6. Remove two pulley covers [2].
7. Remove two pulleys [3].

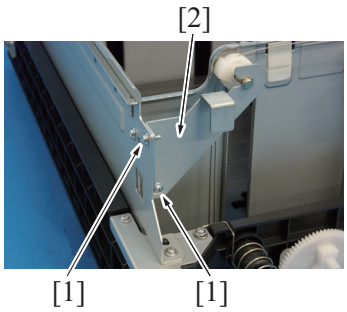


8. Remove two screws [1], and remove the metal plate [2].

9. Remove six screws [1] of the right paper guide plate.

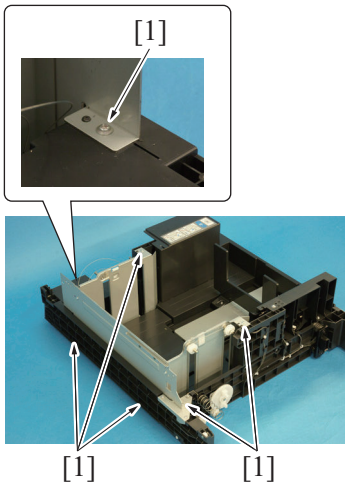


10. Remove the C-ring [1].
11. Remove two pulley covers [2].
12. Remove two pulleys [3].

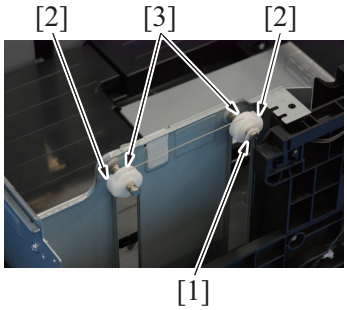


13. Remove three cable holding jigs (white) [1] and the cable holding jig (black) [2], and remove the main tray [3].
**NOTE**
- **Use care not to bend the wires.**

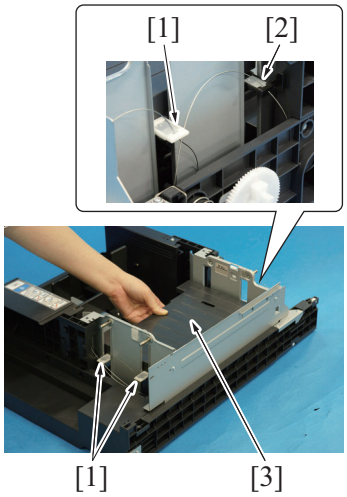


14. Remove the right paper guide plate assy [1].

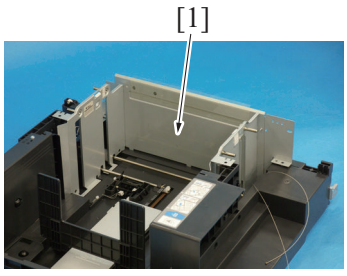

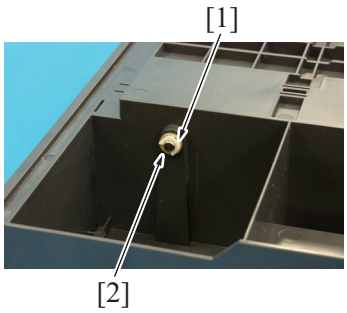


*15.* Turn the tray upside down.
*16.* Remove the C-ring [1] and the bushing [2].

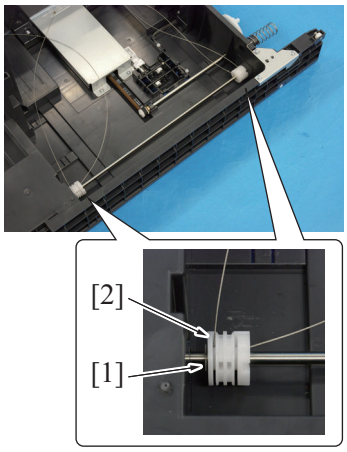


*17.* Turn the tray back to the original status.
*18.* Remove two C-rings [1] and two wire pulleys [2].
*19.* Remove the wire from the wire pulley [2].
**NOTE**
- **Take care not to lose the pin.**
- **When reinstalling the wire pulley [2], check that the direction of the wire coming from both wire pulleys are the same.**

*20.* To reinstall, reverse the order of removal.

## 6.6 Disassembly/reassembly procedure (LU-302)

### 6.6.1 Large capacity unit (LU-302)

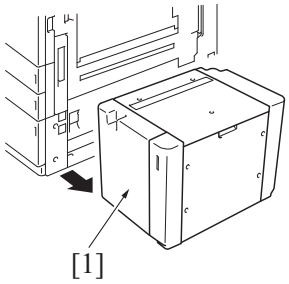


*1.* Remove the large capacity unit [1] from the main body.

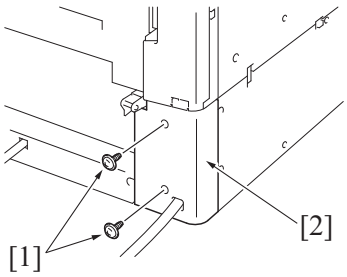


*2.* Remove the two screws [1], and remove the cover [2].

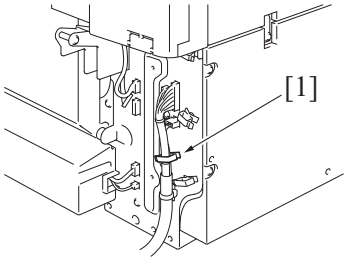


3. Remove the harness from the wire saddle [1].

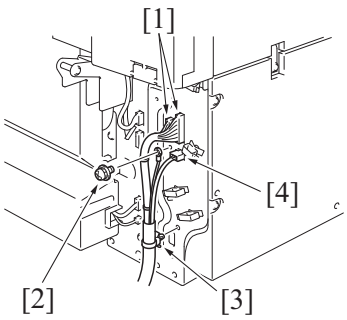


4. Disconnect two connector [1], the screw on the earth wire [2], and the cord clamp [3].
**NOTE**
- **When the optional transformer kit TK-101 is installed, disconnect the connector [4].**

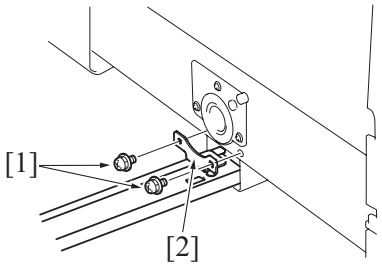


5. Remove two screws [1] and remove the mounting plate [2].

6. To reinstall, reverse the order of removal.

### 6.6.2 Upper door (LU-302)

1. Remove the right cover.
G.6.6.3 Right cover (LU-302)
2. Remove the front cover.
G.6.6.4 Front cover (LU-302)
3. Remove the rear cover.
G.6.6.5 Rear cover (LU-302)
4. Remove the feed cover.
G.6.6.6 Feed cover (LU-302)
5. Open the upper door.

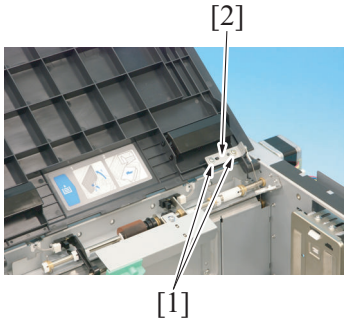


6. Remove two screws [1] and remove the fixed sheet metal [2].

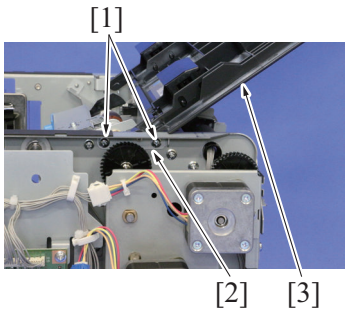


7. Remove two screws [1], the sheet metal [2] and remove the upper door [3].

8. To reinstall, reverse the order of removal.

### 6.6.3 Right cover (LU-302)

1. Open the upper door.

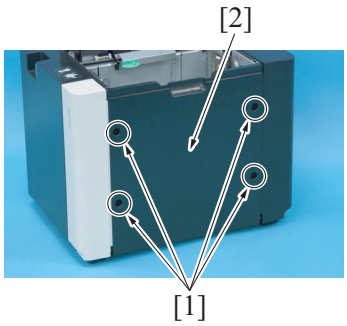


2. Remove four screws [1] and remove the right cover [2].

### 6.6.4 Front cover (LU-302)

1. Remove the right cover.
G.6.6.3 Right cover (LU-302)

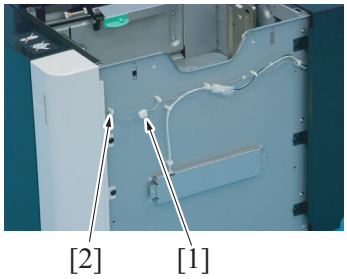


2. Disconnect the connector [1], and remove the harness from the wire saddle [2].

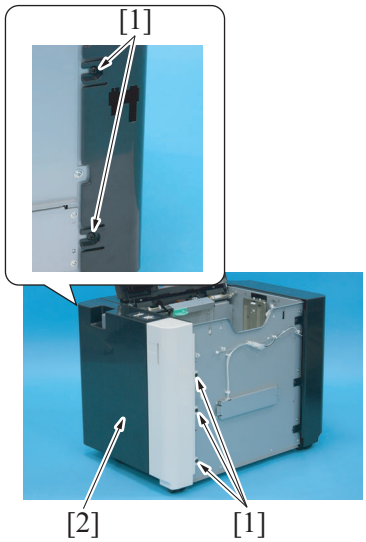


3. Loosen five screws [1] and remove the front cover [2].

### 6.6.5 Rear cover (LU-302)

1. Remove the right cover.

G.6.6.3 Right cover (LU-302)

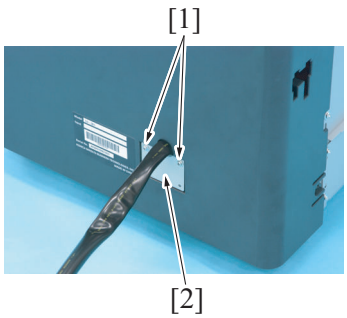


2. Remove two screws [1], and remove the metal plate [2].

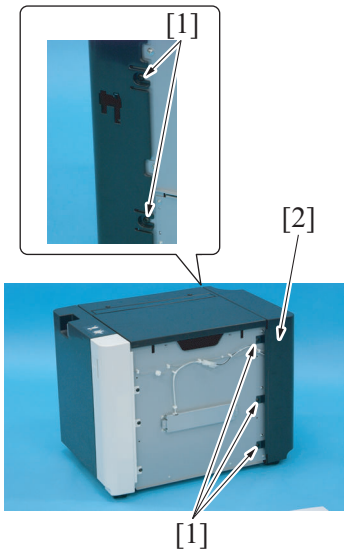


3. Loosen five screws [1] and remove the rear cover [2].

### 6.6.6 Feed cover (LU-302)

1. Remove the right cover.
   G.6.6.3 Right cover (LU-302)
2. Remove the front cover.
   G.6.6.4 Front cover (LU-302)
3. Remove the rear cover.
   G.6.6.5 Rear cover (LU-302)

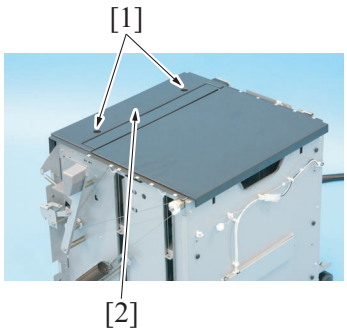


4. Remove two screws [1] and remove the feed cover [2].

### 6.6.7 Lift wire (LU-302)

#### (1) Removal

1. Remove the right cover.
   G.6.6.3 Right cover (LU-302)
2. Remove the front cover.
   G.6.6.4 Front cover (LU-302)
3. Remove the rear cover.
   G.6.6.5 Rear cover (LU-302)

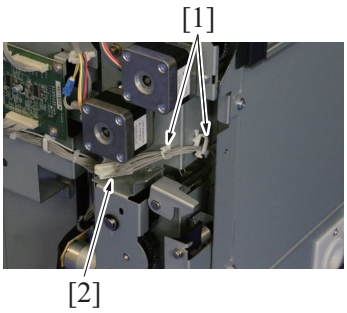


4. Remove the harness from two wire saddles [1], and disconnect the connector [2].

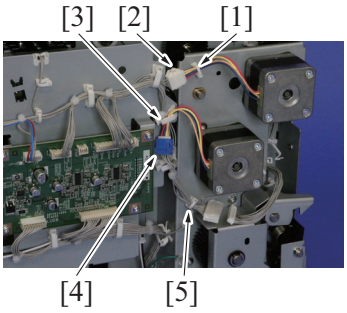


5. Remove the harness from the wire saddle [1], and disconnect the connector [2].
6. Remove the harness from the wire saddle [3], and disconnect the connector [4].
7. Remove the harness from the wire saddle [5].

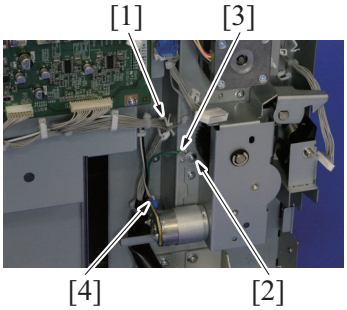


8. Remove the harness from the wire saddle [1].
9. Remove the screw [2], and remove the ground terminal [3].
10. Disconnect the connector [4].

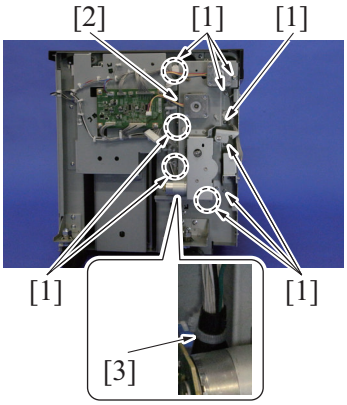


11. Remove nine screws [1], and remove the motor assy [2].
12. Remove the cable tie [3] from the motor assy [2].

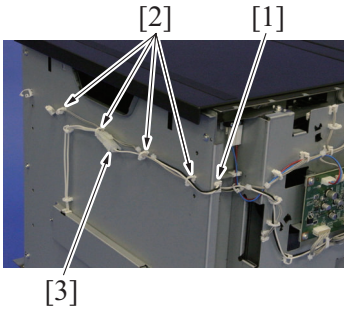


13. Remove the harness from the edge cover [1] and four wire saddles [2].
14. Disconnect the connector [3].

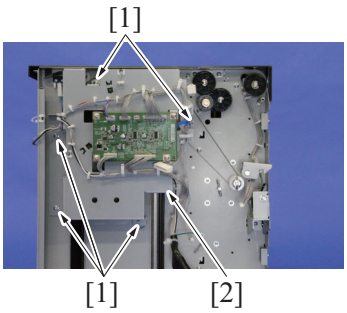


15. Remove five screws [1], and remove the drive board assy [2].

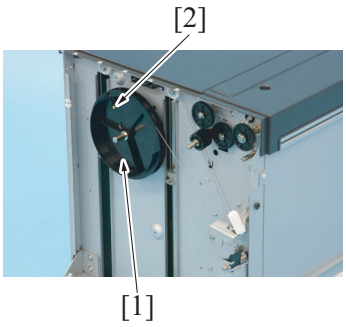


16. Remove the lift wire/L [2] from the rotation plate [1].

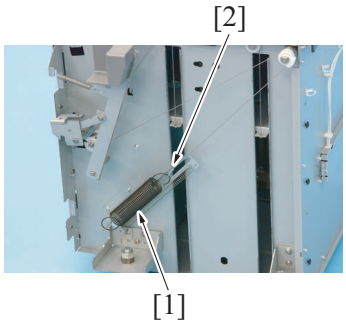


17. Remove the auxiliary wire [2] from the spring [1] on the front side.

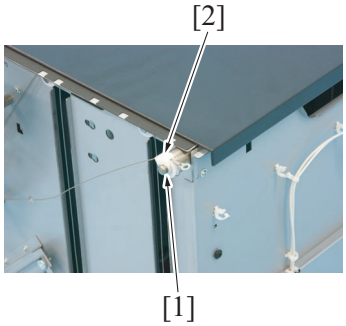


18. Remove the E-ring [1] on the front side to remove the wire holding jig [2].

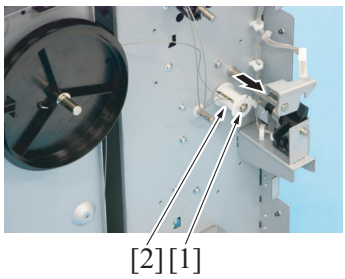


19. Remove the E-ring [1] on the rear side to remove the driving pulley [2].

20. Pull out three lift wires [1].

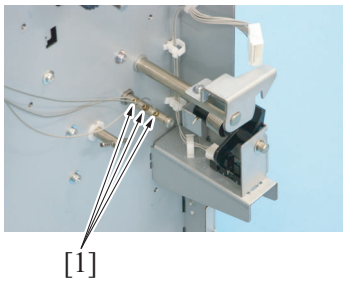


21. Remove two E-rings [1] and two wire pulleys [2] to remove the lift wire/S [3] and the lift wire/L [4].

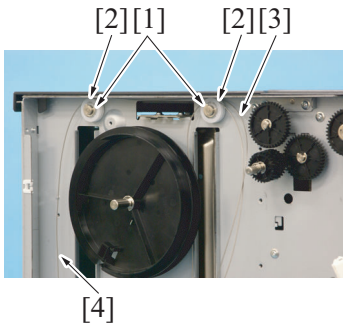


22. Remove the E-ring [1] on the front side to remove the driving pulley [2].

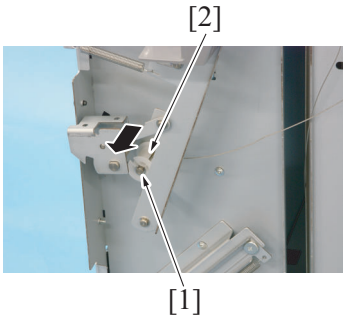


23. Pull out the auxiliary wire [1] and two lift wires [2].

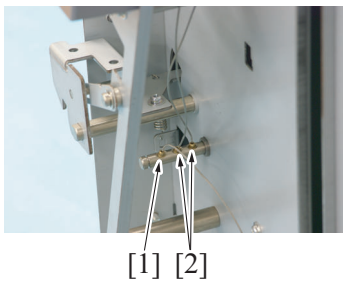


24. Remove two E-rings [1] and two wire pulleys [2] to remove the lift wire/S [3] and the lift wire/L [4].

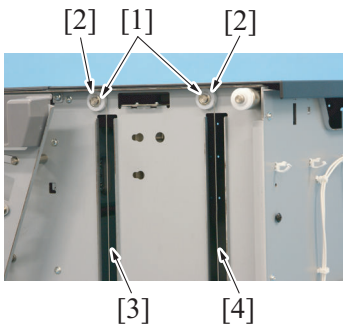

### (2) Mounting

1. Reinstall

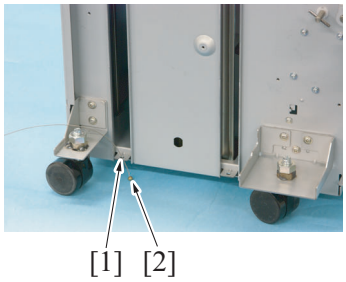


2. Set the lift wire/L [2] to the near side groove [1] on the wire pulley, and secure it with the E-ring [3].

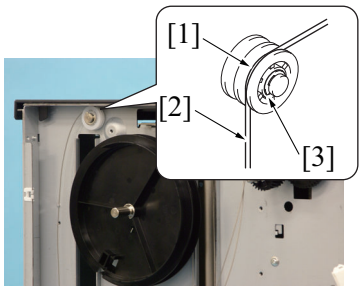


3. Insert the lift wire/S [2] to the right hole [1] on the rear face.

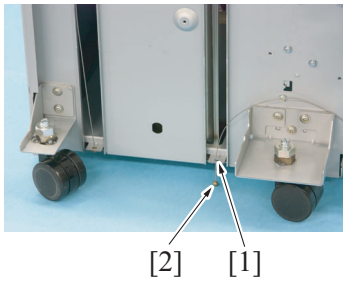


4. Set the lift wire/L [2] to the near side groove [1] on the wire pulley, and set the lift wire/S [4] to the far side groove [3] and secure them with the E-ring [5].

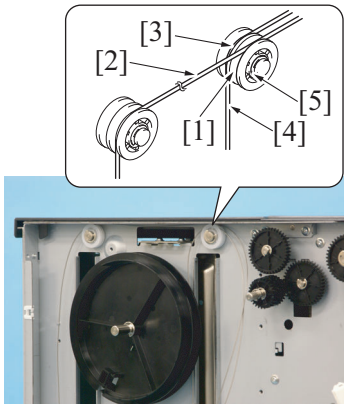


**NOTE**

- **They are properly fixed if both edges of the wire [1] are at the same position.**

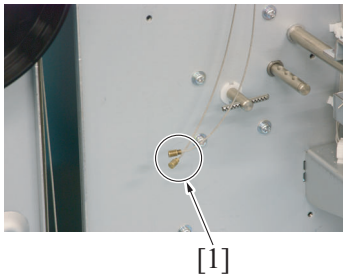

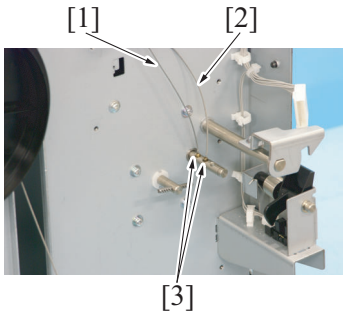


5. Take the edges of the lift wire/S [1] and the lift wire/L [2] and set them to the holes on the shaft [3].

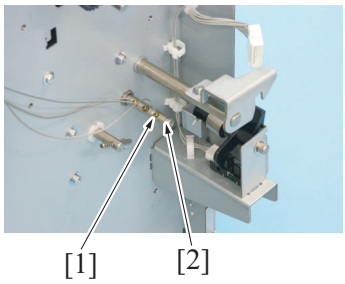


6. Take the edge of the lift wire/L [1] and set it to the hole on the shaft [2].

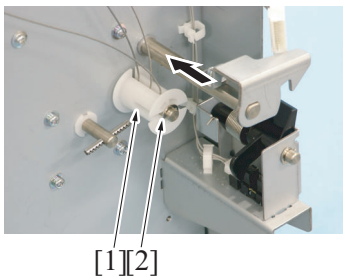


7. Mount the driving pulley [1] and secure it with the E-ring [2].

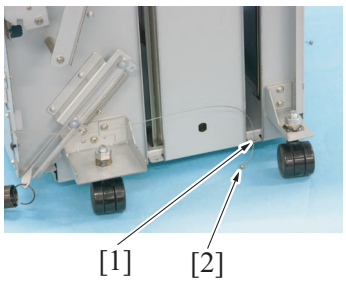


8. Insert the lift wire/L [2] to the right hole [1] on the front face.

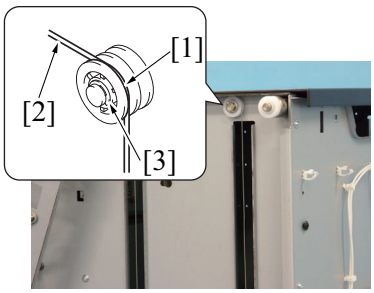


9. Set the lift wire/L [2] to the near side groove [1] on the wire pulley and secure it with the E-ring [3].

*10.* Insert the lift wire/S [2] to the left hole [1] on the front face.

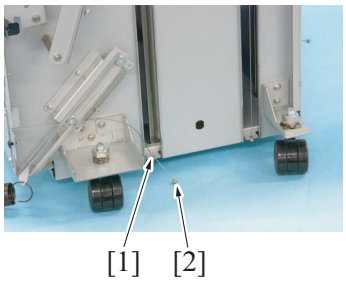


*11.* Set the lift wire/L [2] to the near side groove [1] on the wire pulley, and set the lift wire/S [4] to the far side groove [3] and secure them with the E-ring [5].

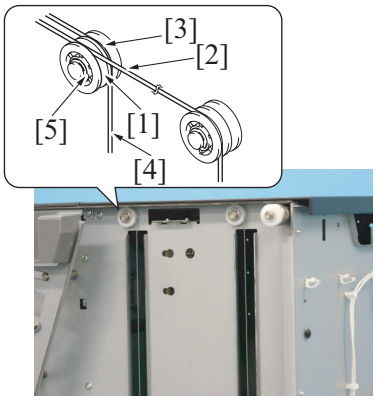


**NOTE**

- **They are properly fixed if both edges of the wire [1] are placed at the same position.**

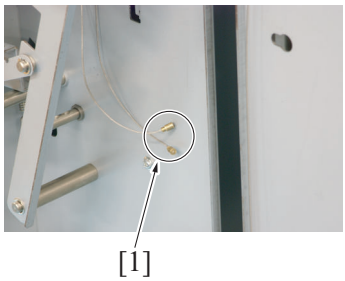


*12.* Take the edges of the lift wire/S [1] and the lift wire/L [2] to set them to the holes on the shaft [3].

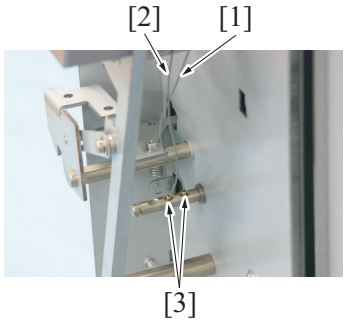


*13.* Take the edge of the auxiliary wire [1] and set it to the hole on the shaft [2].

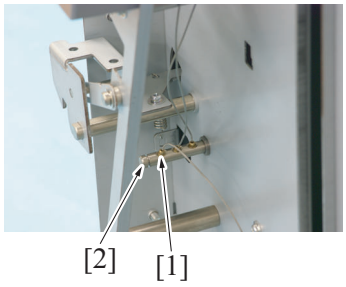

14. Mount the driving pulley [1] and secure it with the E-ring [2].

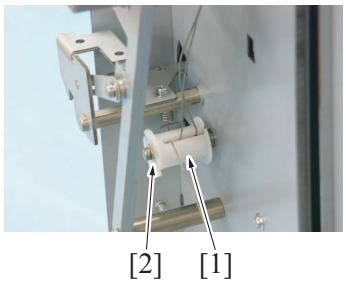


15. Wind the wire to the pulley [2] as rotating the lift up shaft [1] on the rear face counterclockwise and moving the tray assy to the upper end.
**NOTE**
- **Wind the wire to the direction shown by the arrow.**

Rear side

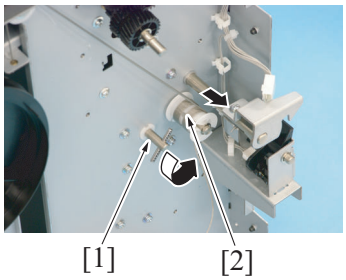


Front side

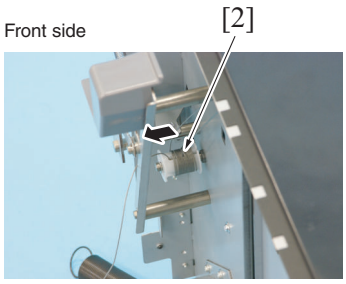


16. When the wire is wound with the tray assy being at the up end, wind the auxiliary wire [2] to the wire pulley [1] clockwise once.

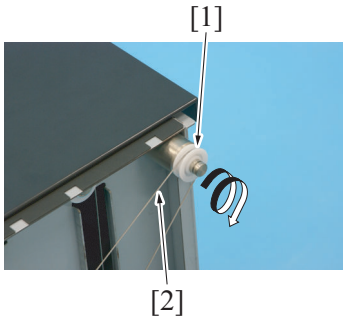


17. Set the auxiliary wire [1] on the front face to the hook of the slide spring [2].

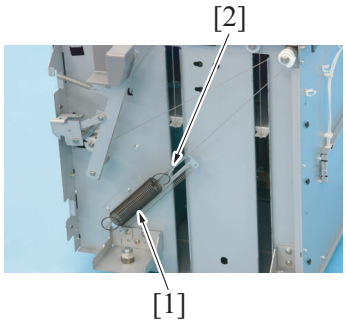

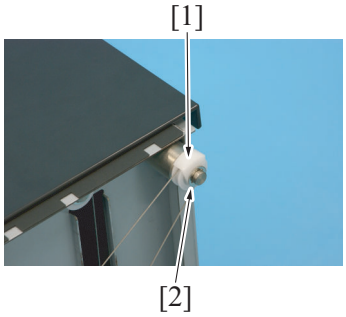


*18.* Mount the wire holding jig [1] and secure it with the E-ring [2].

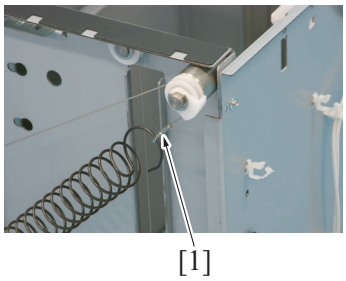


**NOTE**

- **Check to make sure that the wire hook [1] is at the position shown on the picture when the tray assy is at the lower end.**

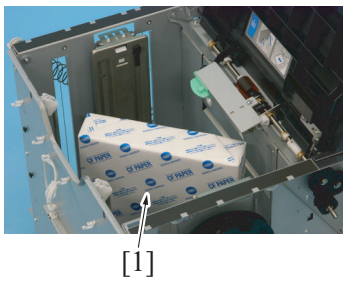


*19.* Place a weight such as a package of paper, etc. [1] to move the tray assy down to the lower end.

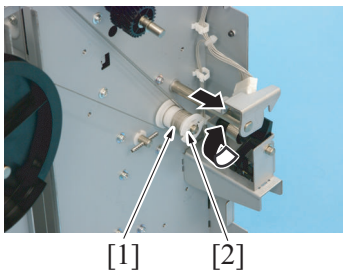


*20.* Wrap the lift wire/L [2] on the driving pulley [1] on the rear face clockwise seven times.

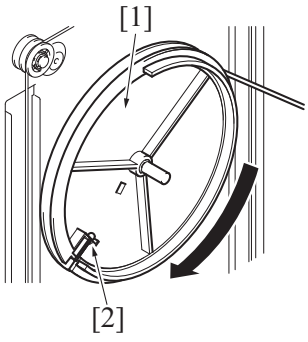


*21.* Turn the rotation plate [1] one and a half times clockwise from the position where the plate holds the tension, to set the lift wire/L [2].

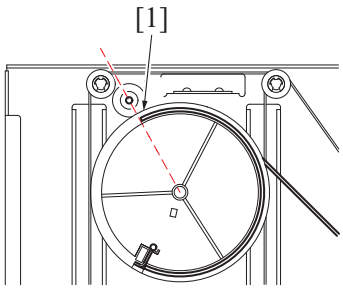


**NOTE**
- **The rib edge [1] of the rotation plate must be around the dotted lines as shown in the picture when the tray assy is at the lowest level.**

22. For the rest of the procedure for mounting, take the reverse steps from disassembling.

### 6.6.8 LU drive board (LUDB) (LU-302)

1. Remove the right cover.
   G.6.6.3 Right cover (LU-302)
2. Remove the rear cover.
   G.6.6.5 Rear cover (LU-302)

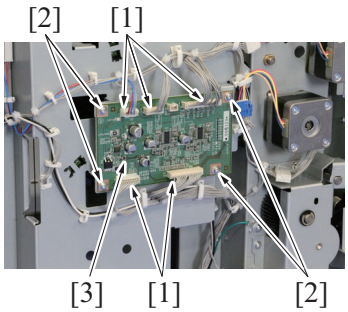


3. Disconnect five connectors [1], remove four screws [2] and remove the LU drive board [3].

### 6.6.9 Lift-up motor (M1) (LU-302)

1. Remove the right cover.
   G.6.6.3 Right cover (LU-302)
2. Remove the rear cover.
   G.6.6.5 Rear cover (LU-302)

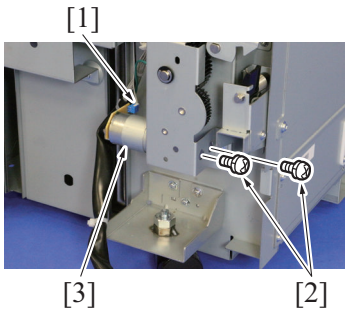


3. Disconnect the connector [1], remove two screws [2] and remove the lift-up motor [3].

### 6.6.10 Dehumidification heater (DH) (LU-302)

1. Remove the right cover.
   G.6.6.3 Right cover (LU-302)

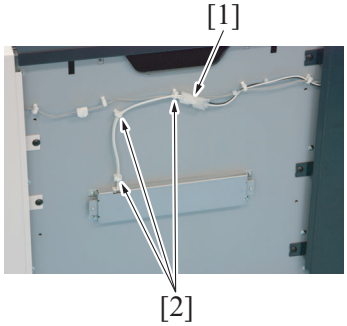


2. Remove the harness from the connector [1] and three wire saddles [2].

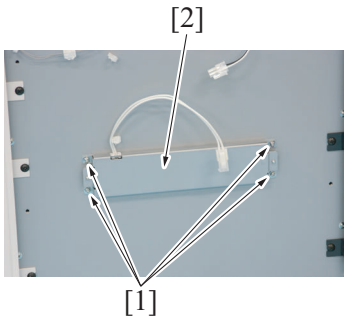


3. Remove four screws [1] and remove the dehumidification heater [2].

## 6.7 Disassembly/reassembly procedure (JS-506)

### 6.7.1 Exit tray 1 (JS-506)

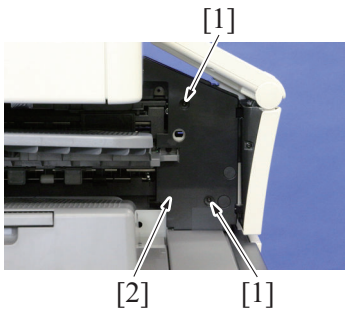


1. Remove two screws [1], and remove the control panel left cover/1 [2].

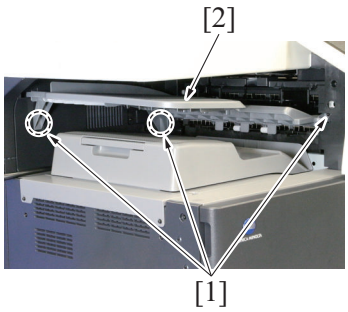


2. Remove three screws [1], and remove the exit tray [2].

3. To reinstall, reverse the order of removal.

### 6.7.2 Exit tray 2 (JS-506)

1. Remove the job separator.
G.6.7.3 Job separator (JS-506)

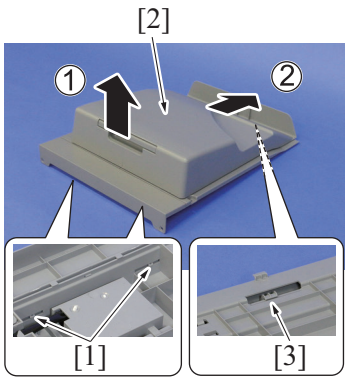


2. Remove two claws [1] and move the exit tray 2 [2] upward.
3. Slide the exit tray 2 [2] to unlock the claws [3], and remove the exit tray 2 [2].

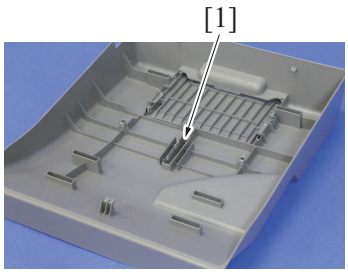


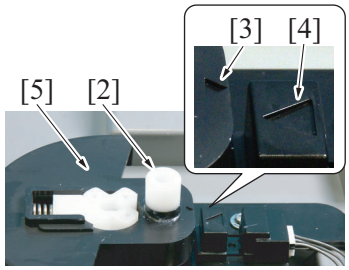


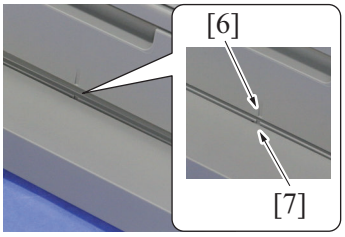


**NOTE**
- **When mounting the exit tray 2, mount the exit tray 2 in the following step so that the shaft [2] of the actuator can be set to the groove [1] of the exit tray 2.**
- **Adjust the actuator [5] so that the positioning marks [3] and [4] will be aligned.**
- **Press the exit tray 2 down with the positioning mark [6] for the exit tray 2 and the positioning mark [7] for the shift unit being aligned.**

*4.* To reinstall, reverse the order of removal.

### 6.7.3 Job separator (JS-506)

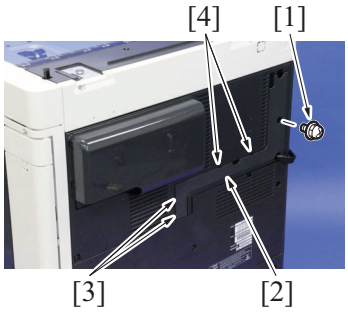


*1.* Remove the screw [1], and remove the cover [2].

**NOTE**
- **When mounting the cover, insert two claws [3] into the holes on the main unit cover first. Then fit two claws [4] into the holes. Be careful not to pinch the harness.**

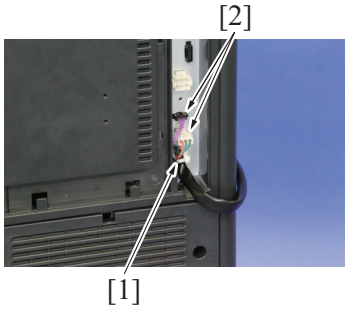


*2.* Remove the cable tie [1], and disconnect two connectors [2].

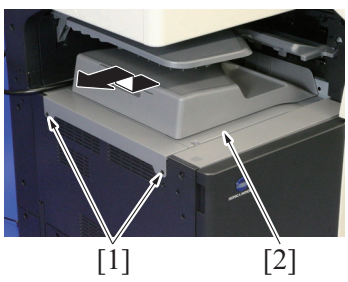


*3.* Remove two screws [1], and remove the job separator [2].

4. To reinstall, reverse the order of removal.

### 6.7.4 Sensor unit (JS-506)

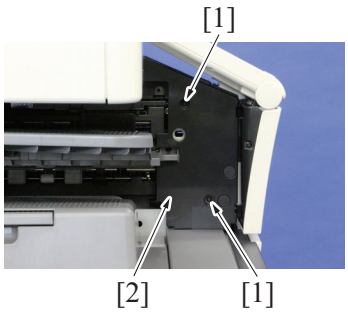


1. Remove two screws [1], and remove the control panel left cover/1 [2].

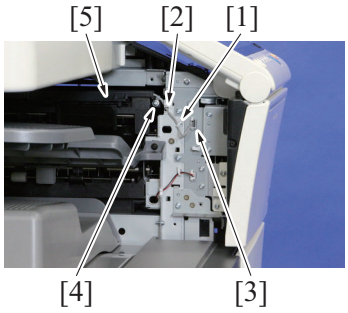


2. Remove the harness from the wire saddle [1] and the edge cover [2].
3. Disconnect the connector [3].
4. Remove the screw [4], and remove the sensor unit [5].

5. To reinstall, reverse the order of removal.

### 6.7.5 JS control board (JSCB) (JS-506)

1. Remove the job separator.
   G.6.7.3 Job separator (JS-506)
2. Remove the exit tray 2.
   G.6.7.2 Exit tray 2 (JS-506)

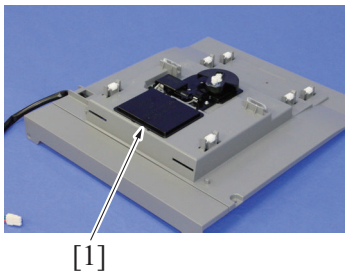


3. Remove the cover [1].

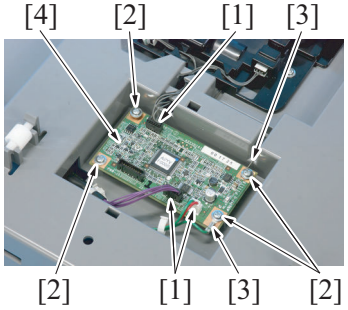


4. Disconnect three connectors [1].
5. Remove four screws [2], and remove two ground terminals [3].
6. Remove the JS control board [4].

7. To reinstall, reverse the order of removal.

### 6.7.6 Tray shift motor (M1) (JS-506)

1. Remove the job separator.
   G.6.7.3 Job separator (JS-506)
2. Remove the exit tray 2.
   G.6.7.2 Exit tray 2 (JS-506)

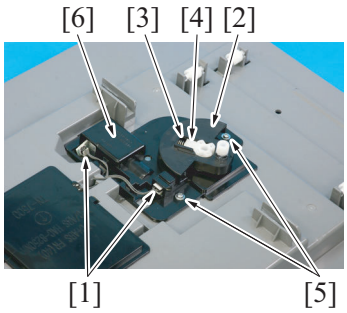


3. Disconnect two connectors [1].
4. Remove the actuator [2].
   **NOTE**
   - **Be careful not to lose the spring [3] and stopper [4].**
5. Remove two screws [5], and remove the cover [6].

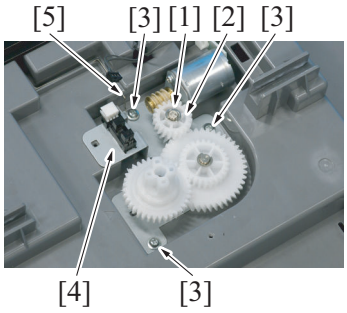


6. Remove the E-ring [1], and remove the gear [2].
7. Remove three screws [3], and remove the tray shift motor drive assy [4].
   **NOTE**
   - **When mounting the tray shift motor drive assy, place the earth terminal [5] on the plate for the tray shift motor drive assy and tighten the screw.**

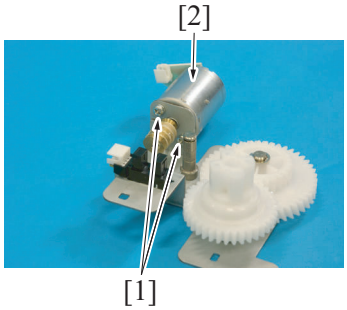


8. Remove two screws [1], and remove the tray shift motor [2].

9. To reinstall, reverse the order of removal.

## 6.8 Disassembly/reassembly procedure (FS-533)

### 6.8.1 Front cover (FS-533)

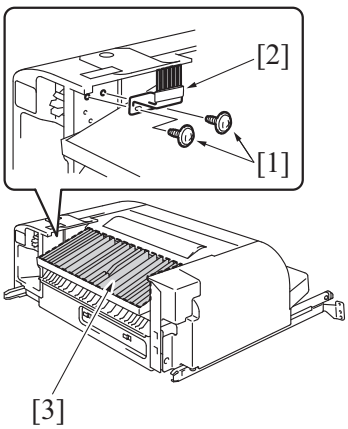


1. Remove two screws [1] and remove the antistatic brush [2].
   **NOTE**
   - **Make sure not to deform the brush by touching it.**
   - **Make sure not to touch the upper surface of the transport unit [3] as it damages the guide plates.**

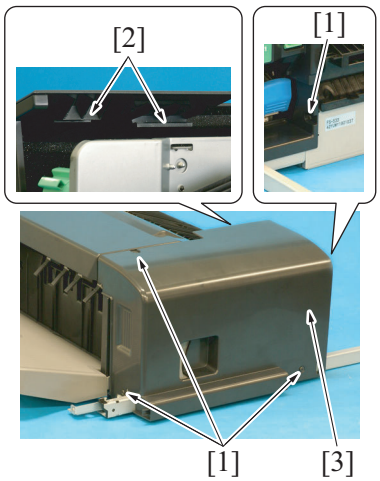


2. Remove four screws [1] and two tabs [2], and remove the front cover [3].

**NOTE**
- **When the punch kit (PK-519) is installed, the cover [1] should be removed.**

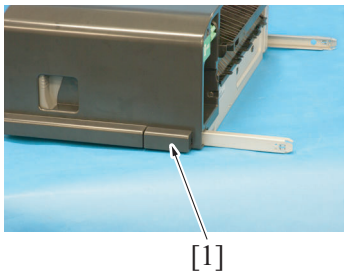


3. To reinstall, reverse the order of removal.

### 6.8.2 Upper cover (FS-533)

1. Remove the front cover.
   G.6.8.1 Front cover (FS-533)
2. Remove the rear cover.
   G.6.8.3 Upper cover (FS-533)

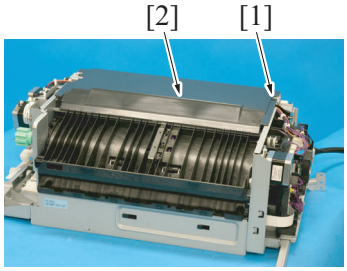


3. Remove the screw [1], and remove the cover [2].

4. To reinstall, reverse the order of removal.

### 6.8.3 Upper cover (FS-533)

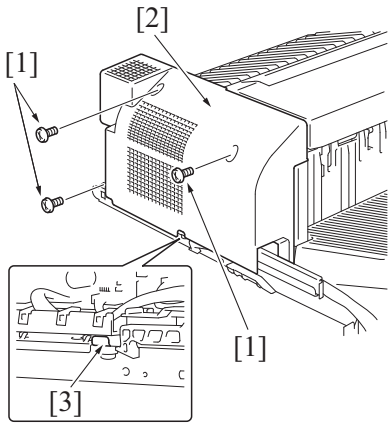


1. Remove three screws [1], and remove the rear cover [2].
   **NOTE**
   - **When mounting the rear cover, hook the tab [3] on the plate to the rear cover.**

2. To reinstall, reverse the order of removal.

### 6.8.4 Finisher (FS-533)

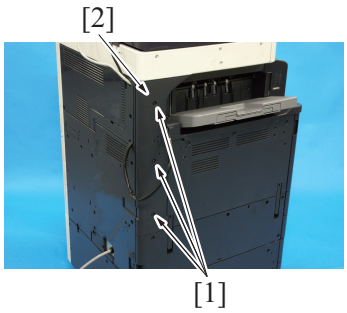


1. Remove three screws [1], and remove the rear left cover [2] of the main body.

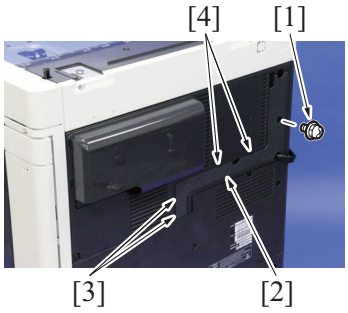


2. Remove the screw [1], and remove the cover [2].
**NOTE**
- **When mounting the cover, insert two claws [3] into the holes on the main unit cover first. Then fit two claws [4] into the holes.**
- **Be careful not to pinch the harness.**

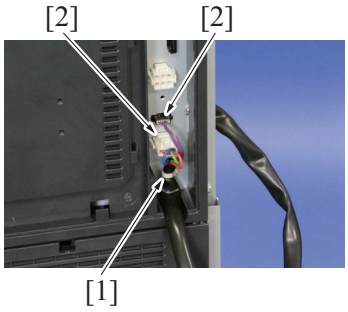


3. Remove the cable tie [1], and disconnect two connectors [2].

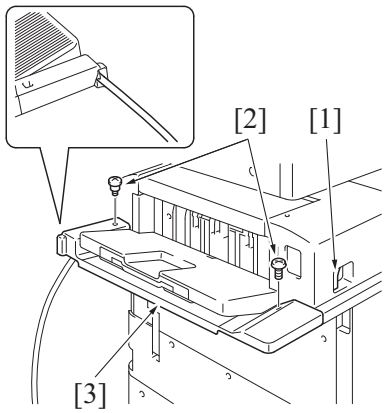


4. Slide the finisher by pulling the lever [1].
5. Remove two screws [2], and remove the cover [3].
**NOTE**
- **When mounting the cover, make the finisher's cable come out from the cover at the position shown in the illustration.**

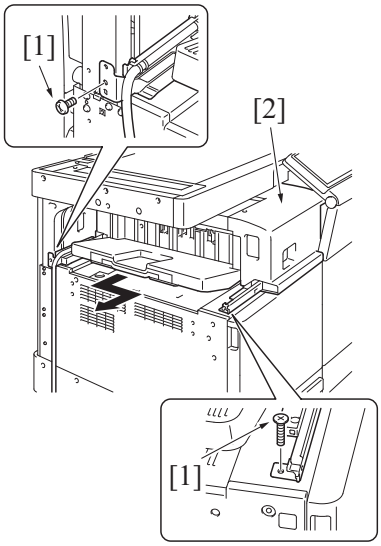


6. Remove two screws [1], and remove the finisher [2] from the main body.

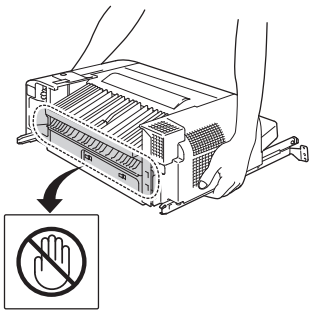

**NOTE**
- **When carrying the finisher, be sure to hold the finisher by the sides as shown in the illustration.**

7. To reinstall, reverse the order of removal.

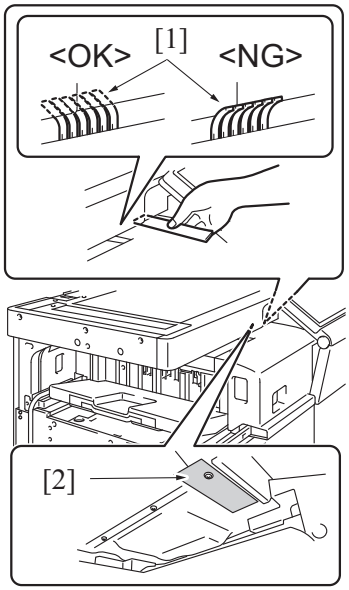


**NOTE**
- **After mounting the finisher to the main body, press the antistatic brush [1] toward the rear using a rule or the like.**
- **Make sure that brush [1] touches the aluminum sheet [2] affixed to the bottom of the scanner unit.**

### 6.8.5 Stapler unit (FS-533)

1. Remove the front cover.
G.6.8.1 Front cover (FS-533)

2. Disconnect two connectors [1].

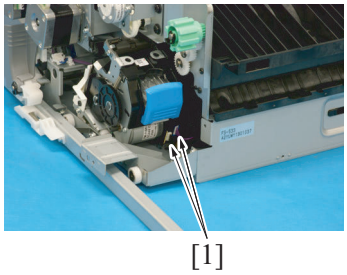


3. Remove two screws [1], and remove the cover [2].
4. Remove the screw [3], and remove the stapler unit assy [4].

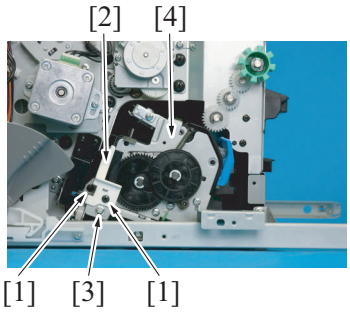


5. Remove two screws [1], and remove the stapler unit [2].
**NOTE**
- **When replacing the stapler unit, attach the guide [3] (Parts No.: A2YU PPE9 ##) to the stapler unit.**

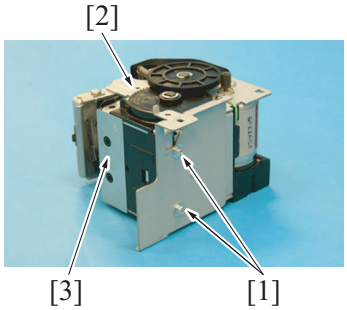


6. To reinstall, reverse the order of removal.

### 6.8.6 Paper exit tray unit (FS-533)

1. Remove five screws [1], and remove the paper exit tray unit [2].

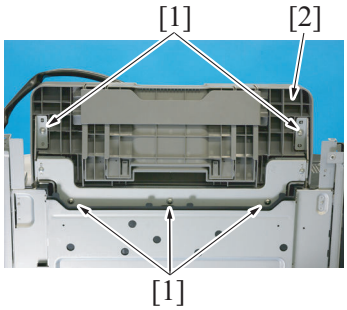


2. To reinstall, reverse the order of removal.

### 6.8.7 FS control board (FSCB) (FS-533)

1. Remove the rear cover.
G.6.8.3 Upper cover (FS-533)

2. Remove all connectors from the FS control board.
3. Remove the screw [1], and remove the FS control board [2].

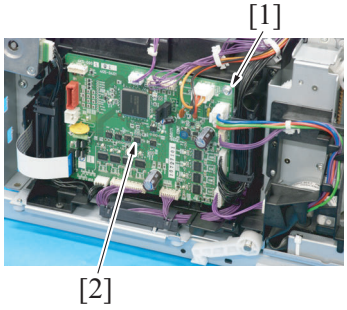

4. To reinstall, reverse the order of removal.
5. Install the firmware.

### 6.8.8 Stapler relay board (STREYB) (FS-533)

1. Remove the front cover.
   G.6.8.1 Front cover (FS-533)
2. Remove the stapler unit.
   G.6.8.5 Stapler unit (FS-533)

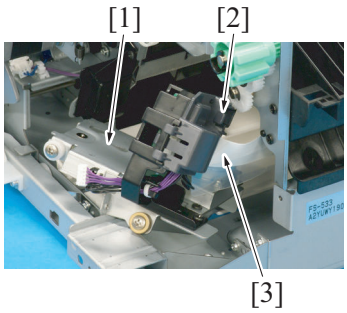


3. Pull out the stapler drive assy [1].
4. Release the lock [2] of the board cover, and remove the flat cable [3].

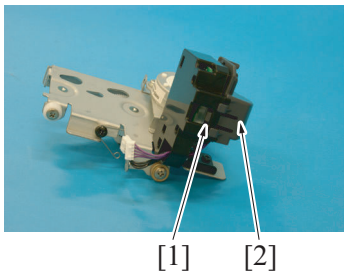


5. Unhook the tab [1], and remove the board cover [2].

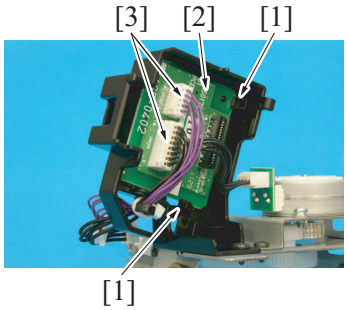


6. Unhook two tabs [1], and remove the stapler relay board [2].
7. Disconnect two connectors [3].
8. To reinstall, reverse the order of removal.

### 6.8.9 Paper conveyance motor (M101) (FS-533)

1. Remove the rear cover.
   G.6.8.3 Upper cover (FS-533)

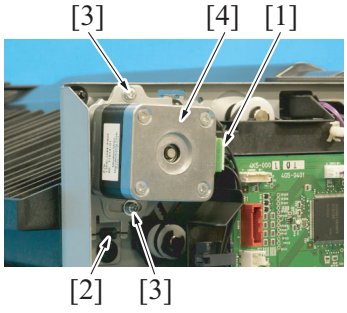


2. Disconnect the connector [1].
3. Remove the spring [2].
4. Remove two screws [3], and remove the paper conveyance motor assy [4].

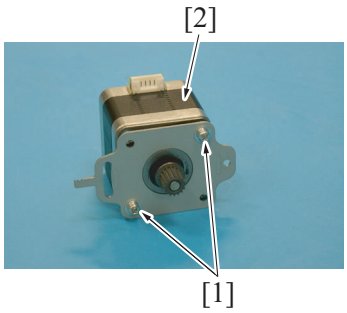


5. Remove two screws [1], and remove the paper conveyance motor [2].

6. To reinstall, reverse the order of removal.

### 6.8.10 Paper exit motor (M102) (FS-533)

1. Remove the front cover.
G.6.8.1 Front cover (FS-533)

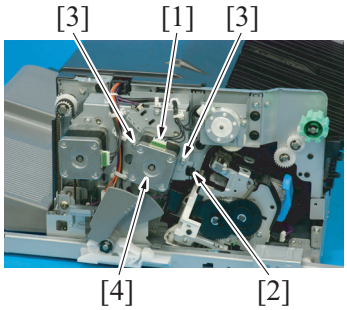


2. Disconnect the connector [1].
3. Remove the spring [2].
4. Remove two screws [3], and remove the paper exit motor assy [4].

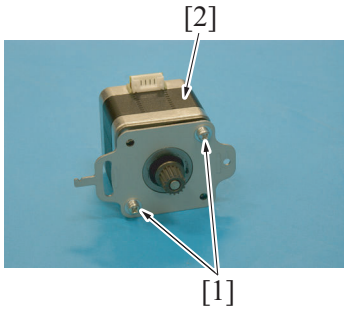


5. Remove two screws [1], and remove the paper exit motor [2].

6. To reinstall, reverse the order of removal.

### 6.8.11 Alignment roller motor (M103) (FS-533)

1. Remove the front cover.
G.6.8.1 Front cover (FS-533)

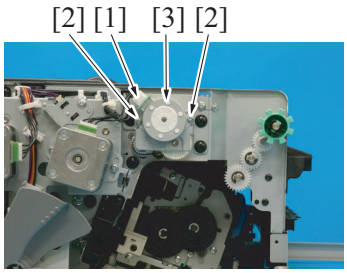


2. Disconnect the connector [1].
3. Remove two screws [2], and remove the alignment roller motor [3].

4. Reinstall the above parts following the removal steps in reverse.

### 6.8.12 Exit roller lift up motor (M104) (FS-533)

1. Remove the front cover.
G.6.8.1 Front cover (FS-533)

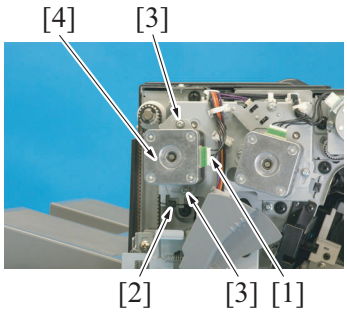


2. Disconnect the connector [1].
3. Remove the spring [2].
4. Remove two screws [3], and remove the exit roller lift up motor assy [4].

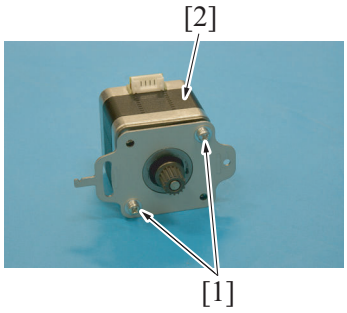


5. Remove two screws [1], and remove the exit roller lift up motor [2].

6. To reinstall, reverse the order of removal.

### 6.8.13 Alignment motor/F (M105), Alignment motor/R (M106) (FS-533)

1. Remove the paper exit tray unit.
G.6.8.6 Paper exit tray unit (FS-533)

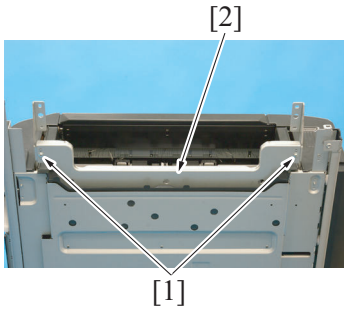


2. Remove two screws [1], and remove the plate [2].

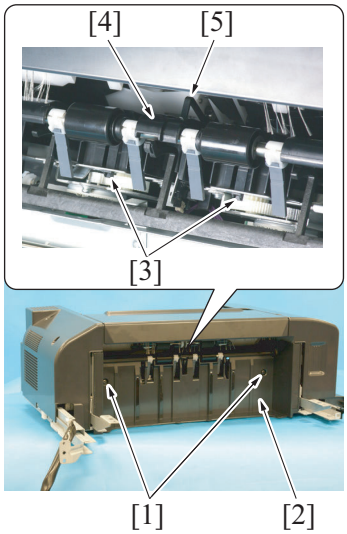


3. Remove two screws [1], and remove the cover [2].
**NOTE**
- **When removing the cover [2], two claws [3] may come off and the alignment tray [4] may come up. This may cause the alignment tray to contact the actuator [5] and cause malfunction of the actuator.**
- **When mounting the cover [2], make sure two claws [3] are attached to the plate.**

4. Remove two screws [1], and pull out the paper surface detect solenoid assy [2].

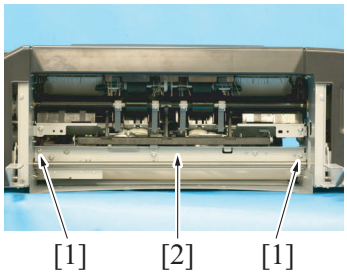


5. Disconnect the connector [1], remove two screws [2], and remove the alignment motor/F [3].
6. Disconnect the connector [4], remove two screws [5], and remove the alignment motor/R [6].

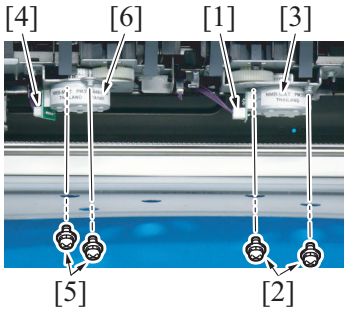


7. To reinstall, reverse the order of removal.

### 6.8.14 Stapler movement motor (M107) (FS-533)

1. Remove the front cover.
   G.6.8.1 Front cover (FS-533)
2. Remove the stapler unit.
   G.6.8.5 Stapler unit (FS-533)

3. Pull out the stapler drive assy [1].
4. Release the lock [2] of the board cover, and remove the flat cable [3].

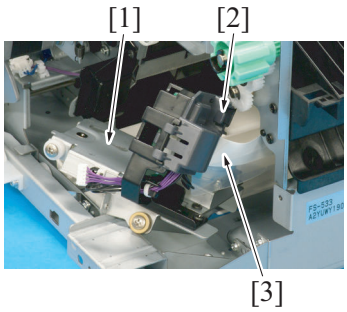


5. Remove two screws [1], and remove the stapler movement motor [2].
6. Disconnect the connector [3].

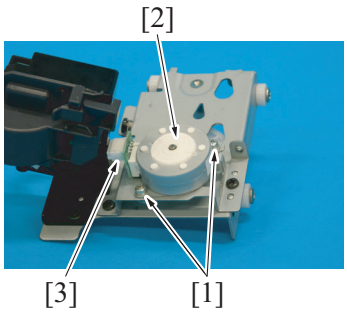


7. To reinstall, reverse the order of removal.

### 6.8.15 Tray lift up motor (M109) (FS-533)

1. Remove the rear cover.
   G.6.8.3 Upper cover (FS-533)

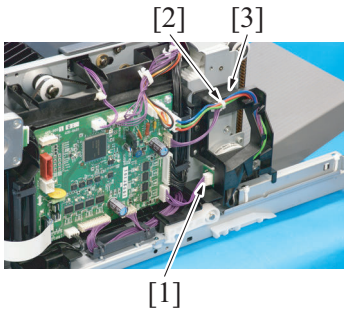


2. Disconnect the connector [1].
3. Remove the harness tie [2] and harness from the harness guide [3].

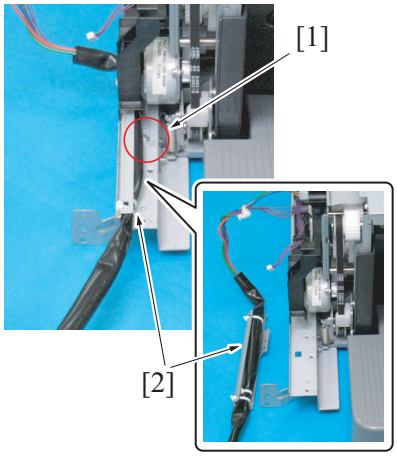


4. Remove the screw [1], and remove the finisher's cable [2].

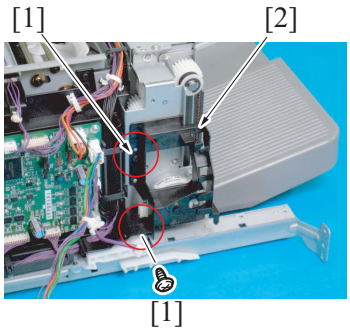


5. Remove two screws [1], and remove the harness guide [2].

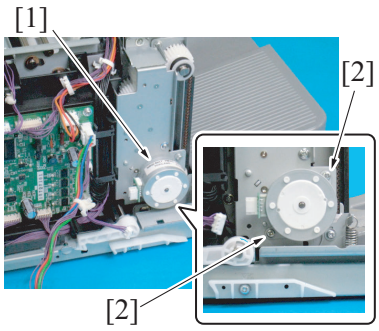


6. Remove two screws [2], and remove the tray lift up motor [1].

7. To reinstall, reverse the order of removal.

### 6.8.16 Paper surface detect solenoid (SD101) (FS-533)

1. Remove the paper exit tray unit.
G.6.8.6 Paper exit tray unit (FS-533)

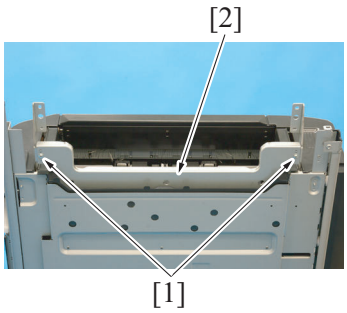


2. Remove two screws [1], and remove the plate [2].

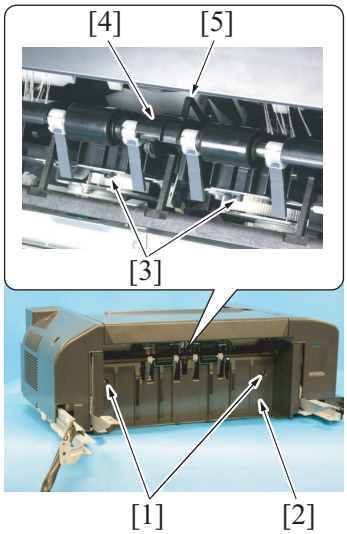


3. Remove two screws [1], and remove the cover [2].
**NOTE**
- **When removing the cover [2], two claws [3] may come off and the alignment tray [4] may come up. This may cause the alignment tray to contact the actuator [5] and cause malfunction of the actuator.**
- **When mounting the cover [2], make sure two claws [3] are attached to the plate.**

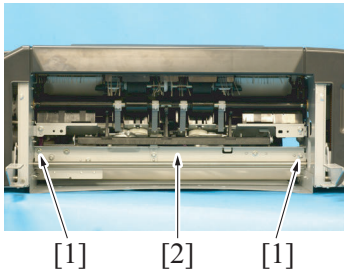


4. Remove two screws [1], and pull out the paper surface detect solenoid assy [2].

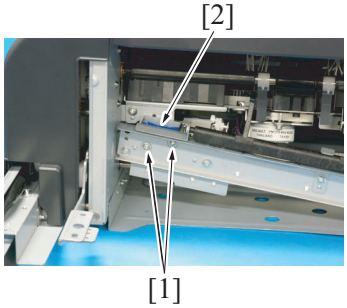


5. Remove two screws [1], and pull out the paper surface detect solenoid [2].

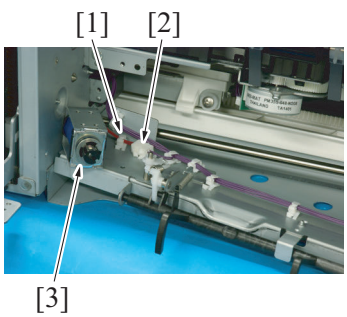


6. Remove the harness from wire saddle [1], and disconnect the connector [2] and remove the paper surface detect solenoid [3].

7. To reinstall, reverse the order of removal.

### 6.8.17 Batch solenoid (SD102) (FS-533)

1. Remove the rear cover.
   G.6.8.3 Upper cover (FS-533)
2. Remove the FS control board.
   G.6.8.7 FS control board (FSCB) (FS-533)
3. Remove the spring [1].

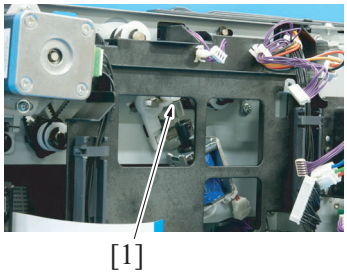


4. Remove the harness from the wire saddle [1].
5. Disconnect the connector [2].
6. Remove the screw [3], and remove the batch solenoid assy [4].

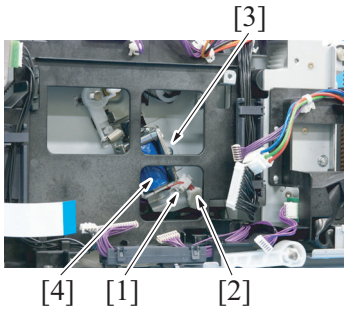


7. Remove the screw [1], and remove the batch solenoid [2].

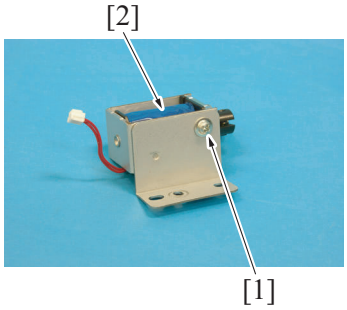


8. To reinstall, reverse the order of removal.

### 6.8.18 Paper exit roller solenoid (SD103) (FS-533)

1. Remove the front cover.
   G.6.8.1 Front cover (FS-533)
2. Remove the spring [1].

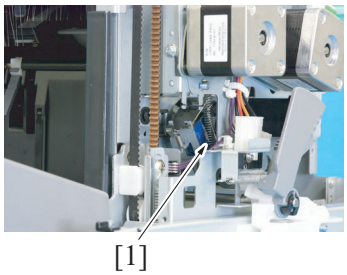

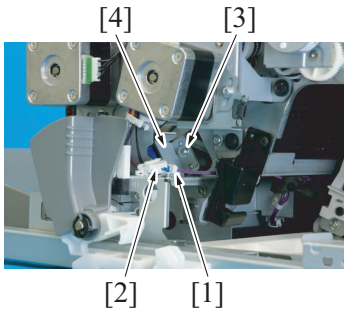


3. Remove the harness from the wire saddle [1].
4. Disconnect the connector [2].
5. Remove the screw [3], and remove the paper exit roller solenoid [4].

6. To reinstall, reverse the order of removal.

### 6.8.19 Paper exit paddle (FS-533)

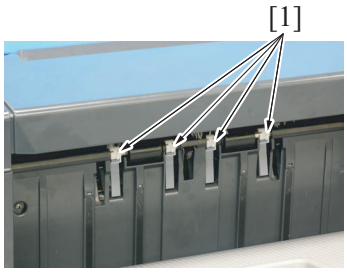


1. Pull the knobs [1] to remove the exit paddle.

2. To reinstall, reverse the order of removal.

## 6.9 Disassembly/reassembly procedure (PK-519)

### 6.9.1 Punch kit (PK-519)

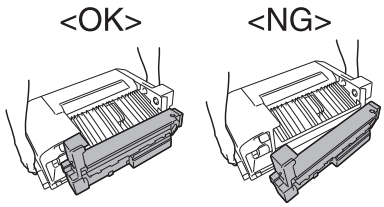


1. Remove the finisher from the main body.
G.6.8.4 Finisher (FS-533)
**NOTE**
- **Make sure that the punch unit is locked to the finisher before removing it.**

2. Remove the rear cover.
G.6.8.3 Upper cover (FS-533)

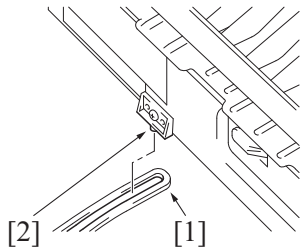


3. Open the punch unit.
4. Remove the stopper arm [1] from the stopper pin [2].

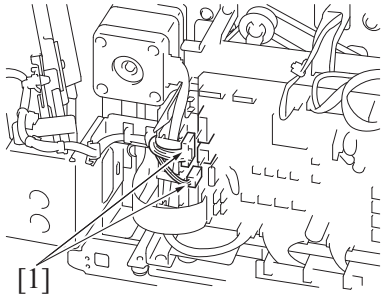


5. Disconnect two connectors [1].

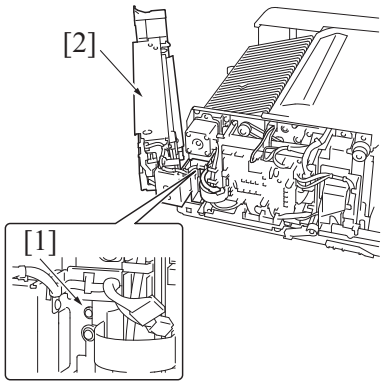


6. Remove the screw [1], and remove the punch unit [2].

7. To reinstall, reverse the order of removal.

### 6.9.2 PK control board (PKCB) (PK-519)

1. Remove the finisher.
G.6.8.4 Finisher (FS-533)

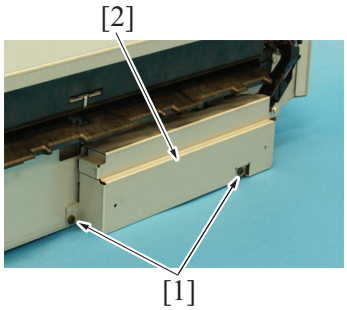


2. Remove two screws [1], and remove the plate [2].

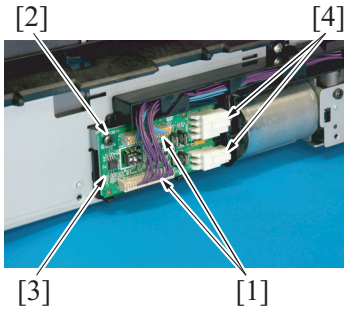


3. Disconnect two connectors [1].
4. Remove the screw [2], and pull out the PK control board [3].
5. Disconnect two connectors [4], and remove the PK control board [3].

6. To reinstall, reverse the order of removal.

### 6.9.3 Punch motor (M201) (PK-519)

1. Remove the finisher.
G.6.8.4 Finisher (FS-533)

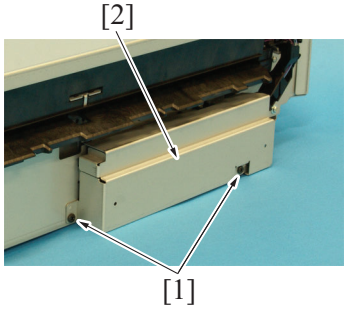


2. Remove two screws [1], and remove the plate [2].

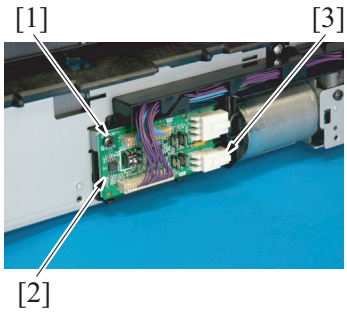


3. Remove the screw [1], and pull out the PK control board [2].
4. Disconnect the connector [3].

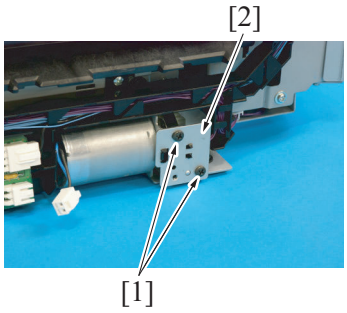


5. Remove two screws [1], and remove the plate [2].

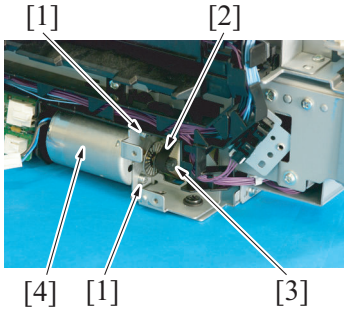


6. Remove two screws [1], and remove the drive belt [2] from the gear [3].
7. Remove the punch motor [4].

8. To reinstall, reverse the order of removal.

## 6.10 Disassembly/reassembly procedure (FS-534/FS-534SD/RU-513)

### 6.10.1 Rear cover (FS-534/FS-534SD)

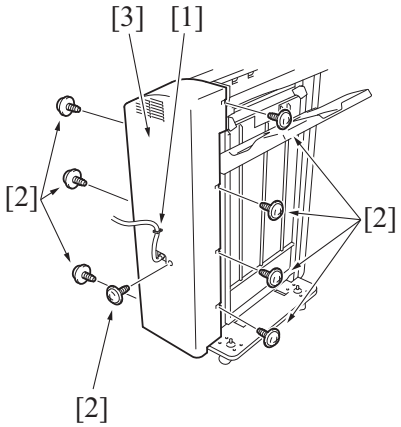


1. Remove the harness from the wire saddle [1].
2. Remove eight screws [2], and remove the rear cover [3].

3. To reinstall, reverse the order of removal.

### 6.10.2 Front door (FS-534/FS-534SD)

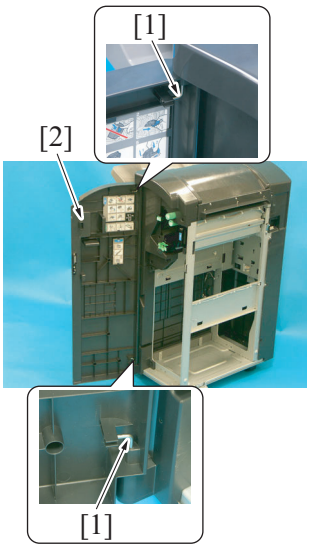


1. Remove the upper and lower stoppers [1], and remove the front door [2].
2. To reinstall, reverse the order of removal.

### 6.10.3 Front upper cover (FS-534/FS-534SD)

1. Remove the front door.
G.6.10.2 Front door (FS-534/FS-534SD)

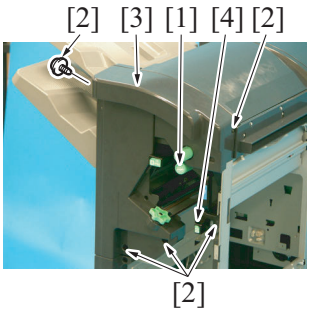


2. Remove the dial (FS5) [1].
3. Remove five screws [2], and remove the front upper cover [3].
**NOTE**
- **When the saddle unit is attached, move the guide plate [4] and then remove the front upper cover.**

4. To reinstall, reverse the order of removal.

### 6.10.4 Left lower cover (FS-534/FS-534SD)

1. Remove the finisher from the main body.
G.6.10.6 Finisher (FS-534/FS-534SD)

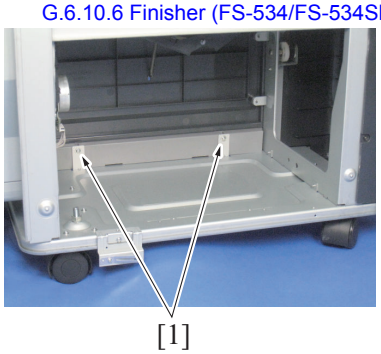


2. Remove two screws [1].
**NOTE**
- **If the saddle unit is installed, pull out the saddle unit, and then remove two screws [1].**

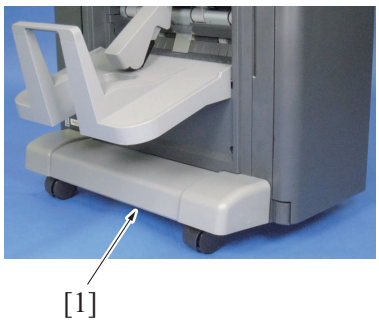


3. Remove the left lower cover [1].
4. To reinstall, reverse the order of removal.

### 6.10.5 Front lower cover (FS-534/FS-534SD)

1. Remove the front door.
   G.6.10.2 Front door (FS-534/FS-534SD)
2. Remove the front upper cover.
   G.6.10.3 Front upper cover (FS-534/FS-534SD)
3. Remove the left lower cover.
   G.6.10.4 Left lower cover (FS-534/FS-534SD)

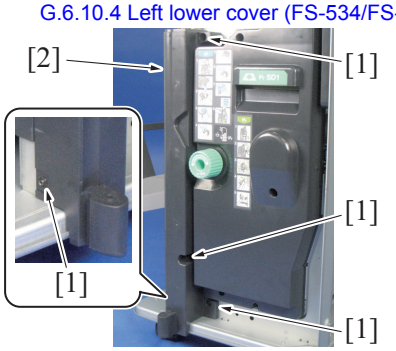


4. Remove four screws [1], and remove the front lower cover [2].
5. To reinstall, reverse the order of removal.

### 6.10.6 Finisher (FS-534/FS-534SD)

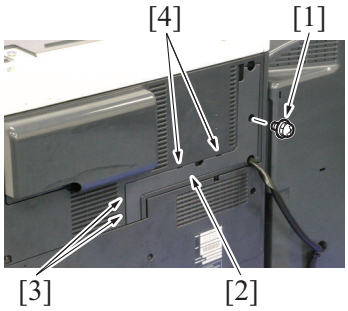


1. Remove the screw [1], and remove the cover [2].
   **NOTE**
   - **When mounting the cover, insert two claws [3] into the holes on the main unit cover first. Then fit two claws [4] into the holes.**
   - **Be careful not to pinch the harness.**

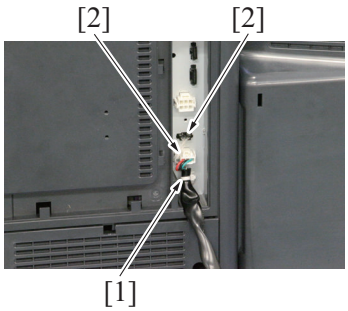


2. Remove the cable tie [1], and disconnect two connectors [2].
3. Open the front door.

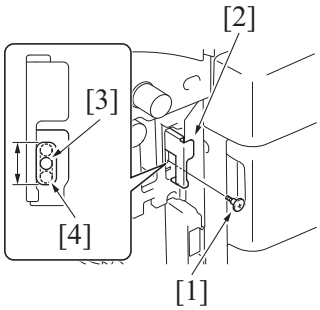


4. Remove the screw [1], and pull out the lever [2].
   **NOTE**
   - **At the time of the finisher installation, make sure that the screw hole [3] locates within the scope of the mounting hole of the lever [4].**

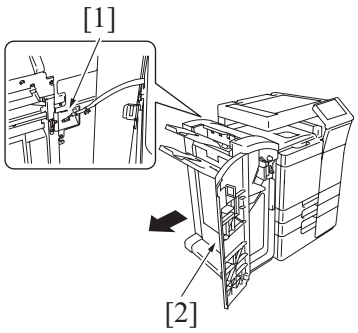


5. Disconnect the connector [1].
6. Remove the finisher [2] from the main body.

**CAUTION**

- When transporting the finisher, make sure to push it to the direction as shown in the illustration. (to prevent turnover during transportation)

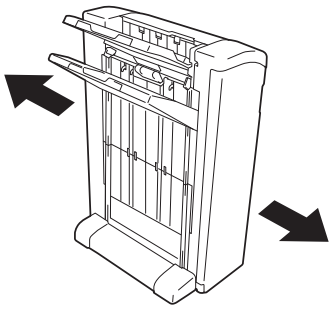

7. To reinstall, reverse the order of removal.

### 6.10.7 Relay unit (RU-513)

1. Remove the finisher from the main body.
G.6.10.6 Finisher (FS-534/FS-534SD)

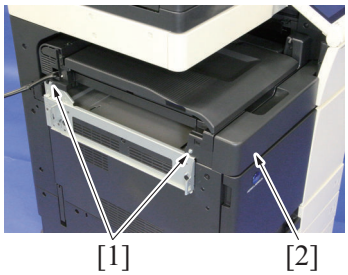


2. Remove two screws [1], and remove the RU transport unit [2].

3. To reinstall, reverse the order of removal.

### 6.10.8 Stapler unit (FS-534/FS-534SD)

1. Open the front door.
2. Remove the rear cover.
G.6.10.1 Rear cover (FS-534/FS-534SD)

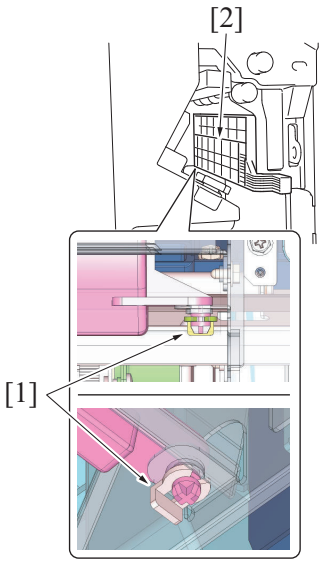


3. When the saddle unit is attached, remove the C-clip [1], and remove the guide plate [2].

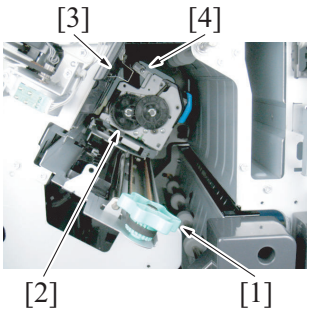


4. Rotate the stapler transfer dial [1] until the stapler [2] has been moved to the location shown in the figure (the location where the back-end stopper [3] does not interact with the clincher staple arm [4]).

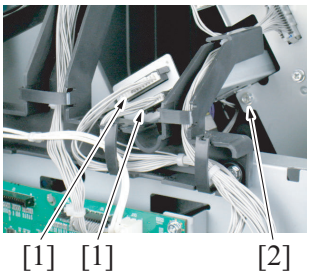


5. Disconnect two connectors [1] from the back of the finisher.
6. Remove the screw [2].

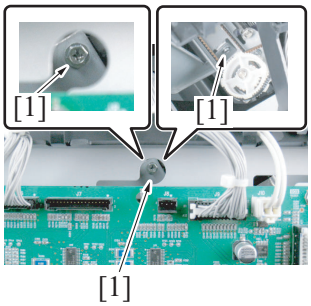


7. Remove the screw [1].

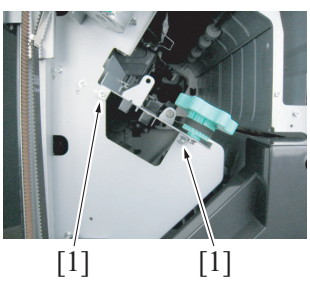


8. Remove two screws [1] from the front of the finisher.

9. Remove the stapler assy [1] from the finisher.
**NOTE**
- **While removing the stapler assy [1], be careful not to hit the stapler against the finisher frame.**

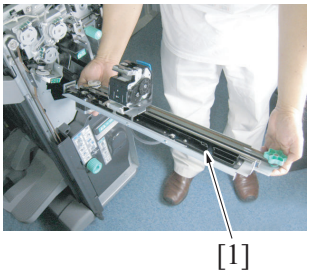


10. Put the stapler assy [2] on a stable workbench.
11. Rotate the stapler transfer dial [1] until the stapler unit [3] has been moved to the near side [4].

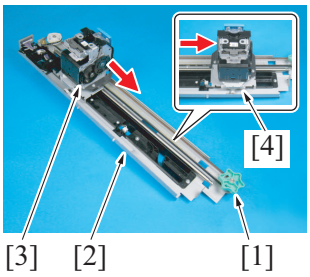


12. Remove two screws [2], and remove the cover [1].

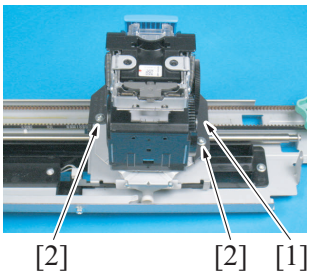


13. Disconnect two connectors [1] of the stapler unit [2].

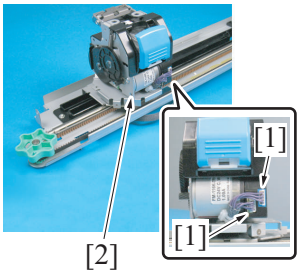


14. Flip the stapler assy [2] over.
15. Remove two E-rings [1] from the guide shafts.

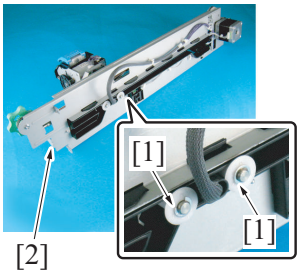

16. Remove the clear spacers [1] and white rollers [2] on both shafts [3].
**NOTE**
- **Be careful not to lose the clear spacers.**

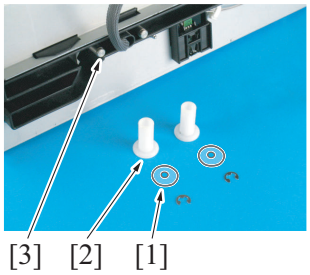


17. Slowly remove the stapler unit [1] from the stapler assy [4].
18. Remove the white rollers [2] on both shafts [3].
**NOTE**
- **Ensure that the harness does not get damaged in the process.**
- **Be careful not to lose the white rollers.**

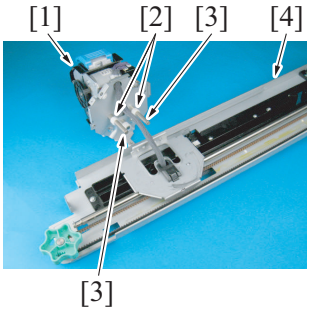


19. Remove two screws [3] of the stapler unit, and remove the stapler base plate [2] from the stapler unit [1].

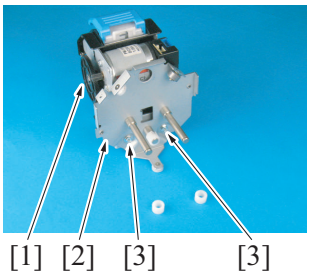


20. To reinstall, reverse the order of removal.
**NOTE**
- **When installing the stapler unit, ensure that the two connectors [1] removed in the process 13 are put through the hole in the base plate [2] and connected to the stapler unit before attaching the base plate.**

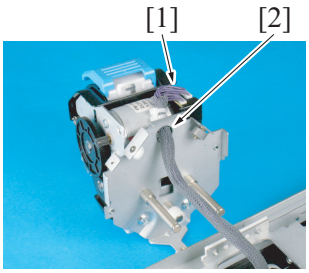


### 6.10.9 Sensor unit (FS-534/FS-534SD)

1. Remove the horizontal transport unit.
G.6.10.7 Relay unit (RU-513)

2. Remove two screws [1], and remove the control panel left cover/1 [2].

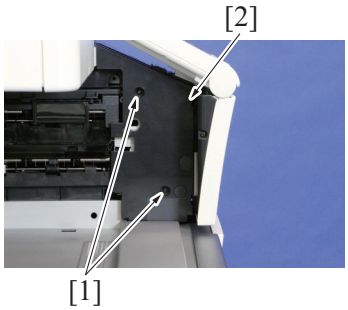

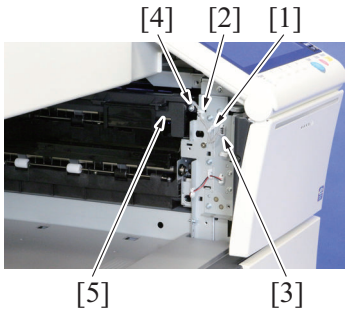


3. Remove the harness from the wire saddle [1] and the edge cover [2].
4. Disconnect the connector [3].
5. Remove the screw [4], and remove the sensor unit [5].
6. To reinstall, reverse the order of removal.

### 6.10.10 Saddle unit (FS-534SD)

# ⚠CAUTION

- Be careful not to catch your finger in the edge of the rail when mounting the saddle unit on the right rail for the saddle unit installation.
- Be careful not to jam your finger in the connecting section of the pantograph.

1. Remove the finisher.
   G.6.10.6 Finisher (FS-534/FS-534SD)
2. Remove the front door of the finisher.
   G.6.10.2 Front door (FS-534/FS-534SD)

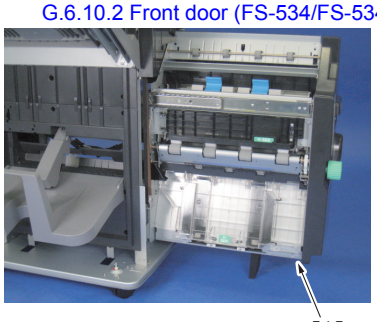


3. Pull out the saddle unit [1].

4. Remove the left lower cover.
   G.6.10.4 Left lower cover (FS-534/FS-534SD)
5. Remove the front upper cover.
   G.6.10.3 Front upper cover (FS-534/FS-534SD)
6. Remove the front lower cover.
   G.6.10.5 Front lower cover (FS-534/FS-534SD)

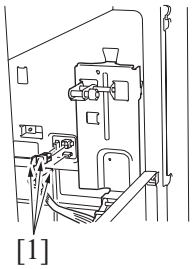


7. Disconnect three connectors [1].

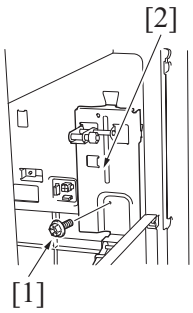


8. Remove the screw [1], and remove the pantograph [2].

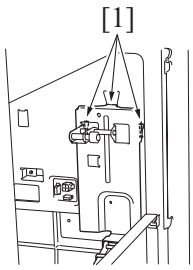


**NOTE**

- **For installation of the pantograph, insert three hooks [1] on the pantograph of the saddle unit into the back holes inside the finisher.**

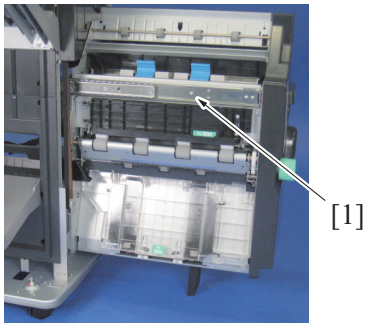


*9.* Remove the screw [1].

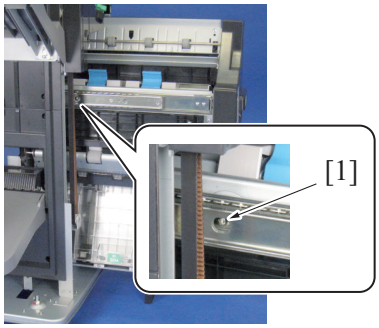


*10.* Push back the saddle unit into the position of the illustration, and then remove the screw [1].

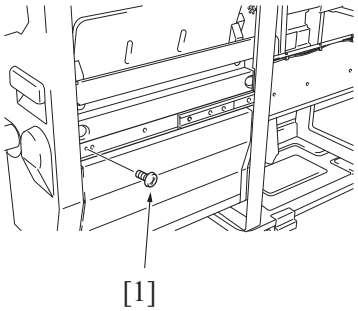


*11.* Pull out the saddle unit, and then remove the screw [1].

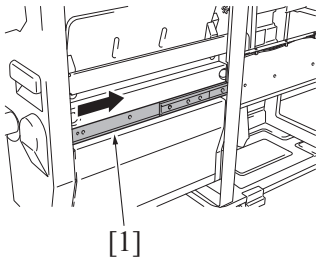


*12.* Insert the rail [1] on the right side into the finisher.

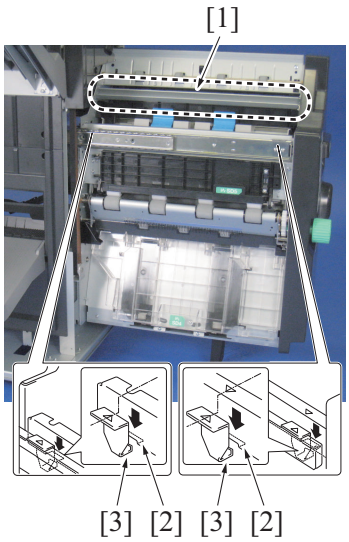


*14.* To reinstall, reverse the order of removal.

*13.* Grip the portion as shown in the illustration [1] to raise the saddle unit and take it out.

**NOTE**

- **For installation of the saddle unit, insert two hooks on the left rail [3] into the two holes of the saddle unit [2].**

# ⚠CAUTION

- Be careful not to catch your finger in the edge of the rail when mounting the saddle unit on the right rail for the saddle unit installation.

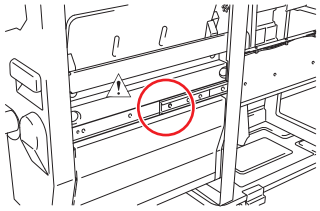

- Be careful not to jam your finger in the connecting section of the pantograph.

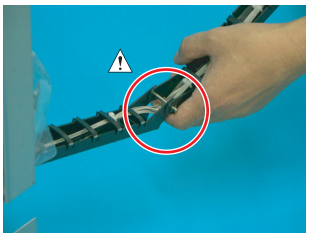

### 6.10.11 FS control board (FSCB) (FS-534/FS-534SD)

1. Remove the finisher from the main body.
   G.6.10.6 Finisher (FS-534/FS-534SD)
2. Remove the rear cover.
   G.6.10.1 Rear cover (FS-534/FS-534SD)

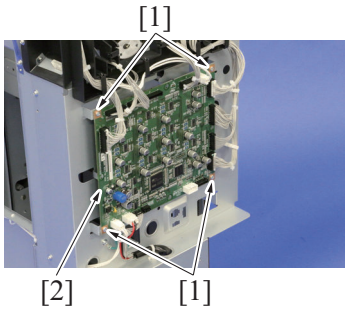


3. Remove all connectors from the FS control board.
4. Remove four screws [1], and remove the FS control board [2].
5. To reinstall, reverse the order of removal.

### 6.10.12 RU transport motor (M1) (RU-513)

1. Remove the finisher from the main body.
   G.6.10.6 Finisher (FS-534/FS-534SD)
2. Remove the RU transport unit.
   G.6.10.7 Relay unit (RU-513)

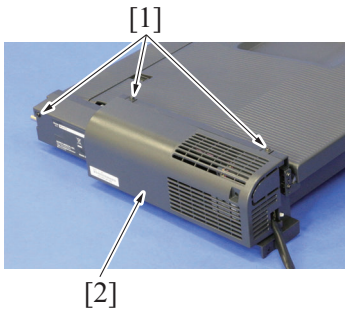


3. Remove three screws [1], and remove the rear cover [2] of the RU transport unit.

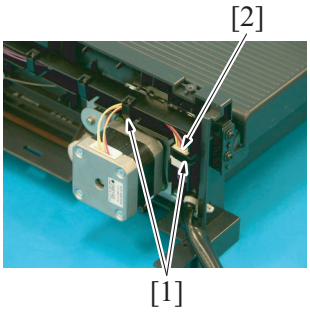


4. Remove the harness from two wire saddles [1].
5. Disconnect the connector [2].

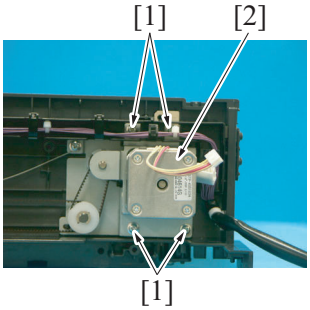


6. Remove four screws [1], and remove the RU transport motor assy [2].

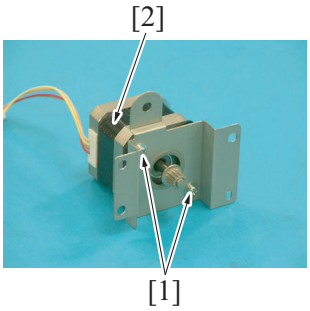


7. Remove two screws [1], and remove the RU transport motor [2].

8. To reinstall, reverse the order of removal.

### 6.10.13 FNS entry transport motor (M2) (FS-534/FS-534SD)

1. Remove the finisher from the main body.
   G.6.10.6 Finisher (FS-534/FS-534SD)
2. Remove the rear cover.
   G.6.10.1 Rear cover (FS-534/FS-534SD)

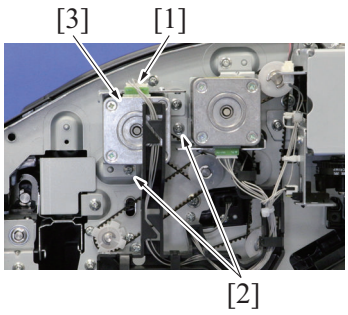


3. Disconnect the connector [1].
4. Remove two screws [2], and remove the FNS entry transport motor assy [3].

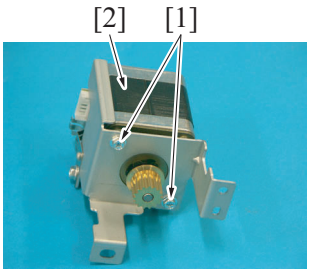


5. Remove two screws [1], and remove the FNS entry transport motor [2].

6. To reinstall, reverse the order of removal.

### 6.10.14 FNS discharge motor (M3) (FS-534/FS-534SD)

1. Remove the finisher from the main body.
   G.6.10.6 Finisher (FS-534/FS-534SD)
2. Remove the rear cover.
   G.6.10.1 Rear cover (FS-534/FS-534SD)

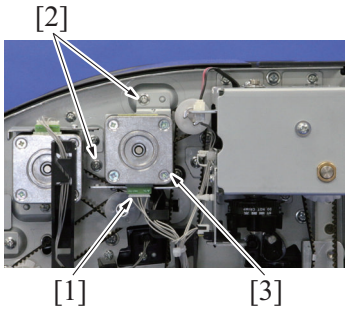


3. Disconnect the connector [1].
4. Remove two screws [2], and remove the FNS discharge motor assy [3].

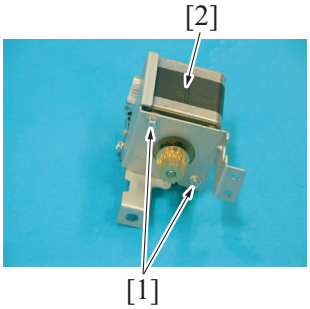


5. Remove two screws [1], and remove the FNS discharge motor [2].

6. To reinstall, reverse the order of removal.

### 6.10.15 Receiving roller retraction motor (M4) (FS-534/FS-534SD)

1. Remove the finisher from the main body.
   G.6.10.6 Finisher (FS-534/FS-534SD)
2. Remove the front door.
   G.6.10.2 Front door (FS-534/FS-534SD)
3. Remove the front upper cover.
   G.6.10.3 Front upper cover (FS-534/FS-534SD)

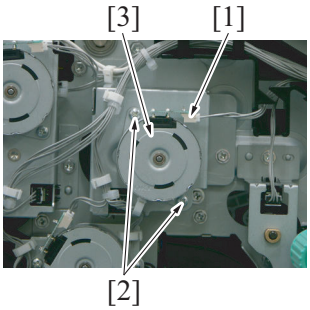


4. Disconnect the connector [1].
5. Remove two screws [2], and remove the receiving roller retraction motor [3].

6. To reinstall, reverse the order of removal.

### 6.10.16 FNS paddle motor (M5) (FS-534/FS-534SD)

1. Remove the finisher from the main body.
   G.6.10.6 Finisher (FS-534/FS-534SD)

2. Remove the front door.
   G.6.10.2 Front door (FS-534/FS-534SD)
3. Remove the front upper cover.
   G.6.10.3 Front upper cover (FS-534/FS-534SD)

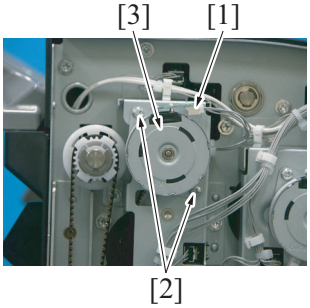


4. Disconnect the connector [1].
5. Remove two screws [2], and remove the FNS paddle motor [3].
6. To reinstall, reverse the order of removal.

### 6.10.17 Trailing edge stopper motor (M6) (FS-534/FS-534SD)

1. Remove the finisher from the main body.
   G.6.10.6 Finisher (FS-534/FS-534SD)
2. Remove the front door.
   G.6.10.2 Front door (FS-534/FS-534SD)
3. Remove the front upper cover.
   G.6.10.3 Front upper cover (FS-534/FS-534SD)

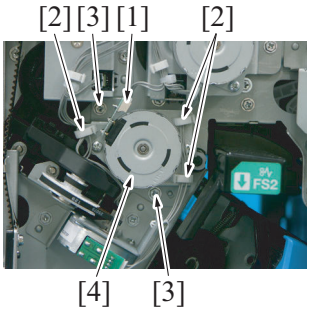


4. Disconnect the connector [1].
5. Remove the harness from three wire saddles [2].
6. Remove two screws [3], and remove the trailing edge stopper motor assy [4].

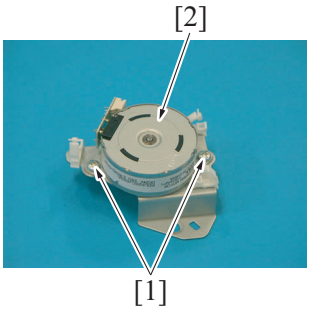


7. Remove two screws [1], and remove the trailing edge stopper motor [2].
8. To reinstall, reverse the order of removal.

### 6.10.18 Alignment motor/front (M7) (FS-534/FS-534SD)

1. Remove the finisher from the main body.
   G.6.10.6 Finisher (FS-534/FS-534SD)
2. Remove the front door.
   G.6.10.2 Front door (FS-534/FS-534SD)
3. Remove the front upper cover.
   G.6.10.3 Front upper cover (FS-534/FS-534SD)

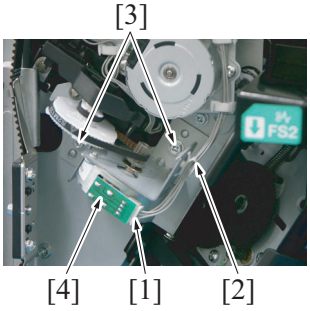


4. Disconnect the connector [1].
5. Remove the harness from the wire saddle [2].
6. Remove two screws [3], and remove the alignment motor/front assy [4].

7. Remove two screws [1], and remove the alignment motor/front [2].

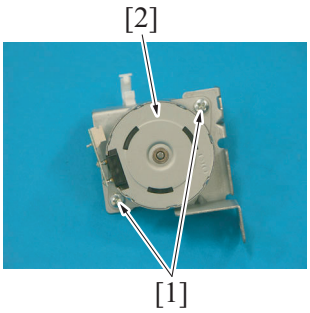


8. To reinstall, reverse the order of removal.

### 6.10.19 Alignment motor/rear (M8) (FS-534/FS-534SD)

1. Remove the finisher from the main body.
   G.6.10.6 Finisher (FS-534/FS-534SD)
2. Remove the rear cover.
   G.6.10.1 Rear cover (FS-534/FS-534SD)

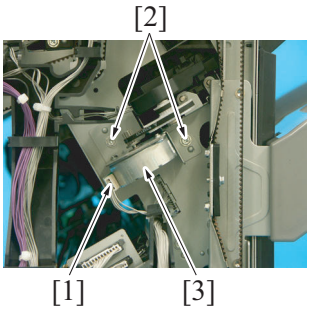


3. Disconnect the connector [1].
4. Remove two screws [2], and remove the alignment motor/rear assy [3].

5. Remove two screws [1], and remove the alignment motor/rear [2].

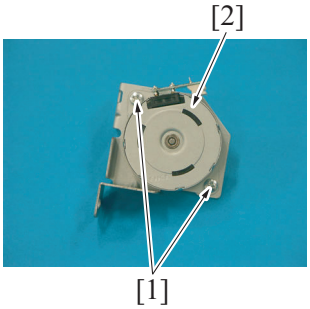


6. To reinstall, reverse the order of removal.

### 6.10.20 Pre-eject drive motor (M9) (FS-534/FS-534SD)

1. Remove the finisher from the main body.
   G.6.10.6 Finisher (FS-534/FS-534SD)
2. Remove the rear cover.
   G.6.10.1 Rear cover (FS-534/FS-534SD)
3. When the saddle unit is attached, open the front door and pull out the saddle unit.

4. Remove two screws [1], and remove the exit tray [2].

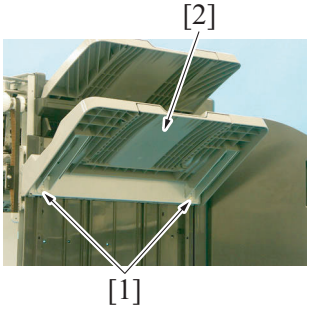

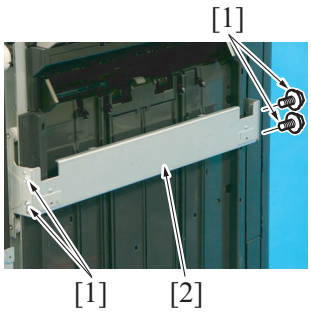


5. Remove four screws [1], and remove the plate [2].

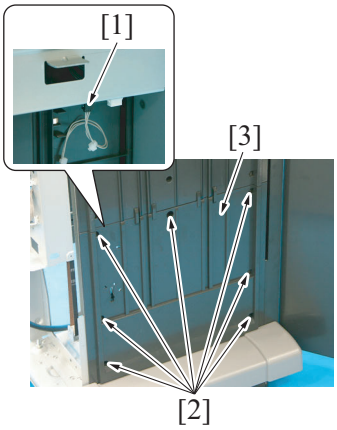


6. Disconnect the connector [1].
7. Remove seven screws [2], and remove the left lower cover [3].
   **NOTE**
   - **When the saddle unit is attached, disconnect two connectors.**

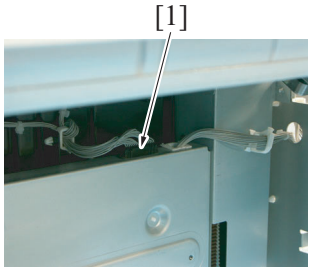


8. Disconnect the connector [1].

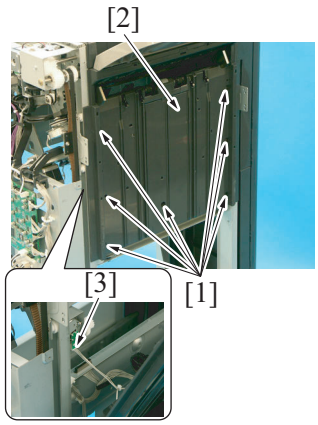


9. Remove seven screws [1], and remove the left upper cover [2].
10. Disconnect the connector [3].

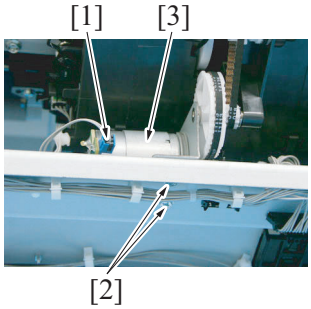


11. Disconnect the connector [1].
12. Remove two screws [2], and remove the pre-eject drive motor assy [3].

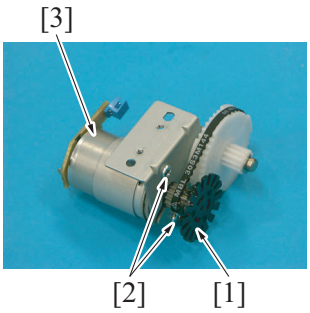


13. Remove the rotating disk [1].
14. Remove two screws [2], and remove the pre-eject drive motor [3].
15. To reinstall, reverse the order of removal.

### 6.10.21 Bundle eject motor (M10) (FS-534/FS-534SD)

1. Remove the finisher from the main body.
   G.6.10.6 Finisher (FS-534/FS-534SD)
2. Remove the rear cover.
   G.6.10.1 Rear cover (FS-534/FS-534SD)
3. When the saddle unit is attached, open the front door and pull out the saddle unit.

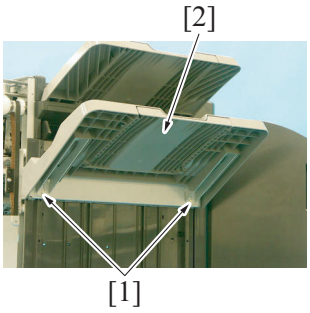


4. Remove two screws [1], and remove the exit tray [2].

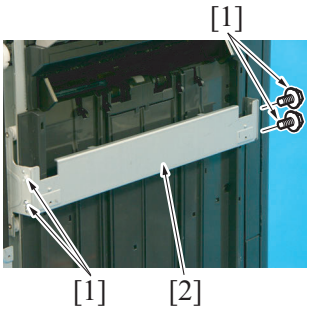


5. Remove four screws [1], and remove the plate [2].

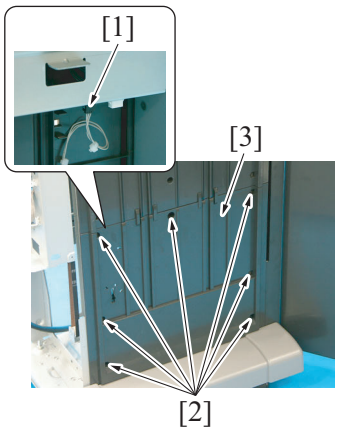


6. Disconnect the connector [1].
7. Remove seven screws [2], and remove the left lower cover [3].
   **NOTE**
   - **When the saddle unit is attached, disconnect two connectors.**

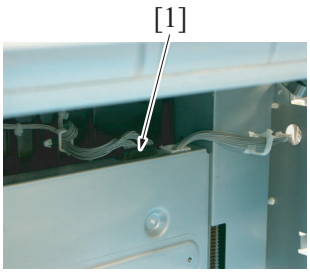


8. Disconnect the connector [1].

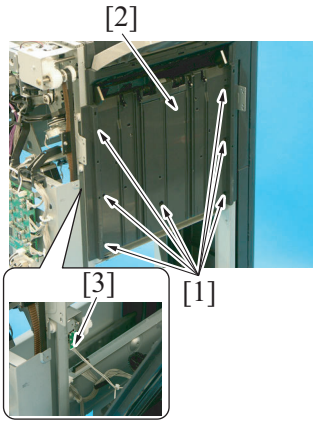


9. Remove seven screws [1], and remove the left upper cover [2].
10. Disconnect the connector [3].

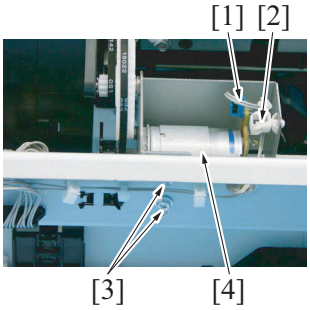


11. Disconnect the connector [1], and remove the harness from the wire saddle [2].
12. Remove two screws [3], and remove the bundle eject motor assy [4].

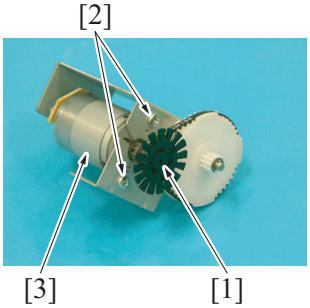


13. Remove the rotating disk [1].
14. Remove two screws [2], and remove the bundle eject motor [3].

15. To reinstall, reverse the order of removal.

### 6.10.22 Main tray up/down motor (M11) (FS-534/FS-534SD)

1. Remove the finisher from the main body.
   G.6.10.6 Finisher (FS-534/FS-534SD)
2. Remove the rear cover.
   G.6.10.1 Rear cover (FS-534/FS-534SD)

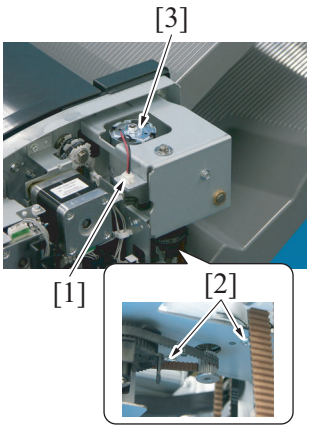


3. Disconnect the connector [1].
4. Remove two screws [2], and remove the main tray up/down motor [3].

5. To reinstall, reverse the order of removal.

### 6.10.23 Paper receiving control motor (M12) (FS-534/FS-534SD)

1. Remove the finisher from the main body.
   G.6.10.6 Finisher (FS-534/FS-534SD)
2. Remove the rear cover.
   G.6.10.1 Rear cover (FS-534/FS-534SD)
3. When the saddle unit is attached, open the front door and pull out the saddle unit.

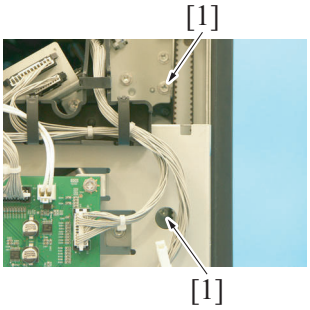


4. Remove two screws [1].

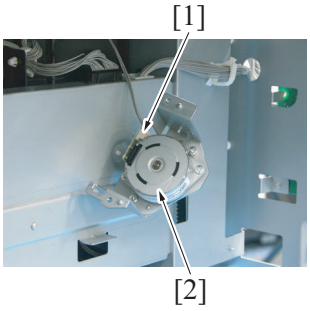


5. Disconnect the connector [1], and remove the paper receiving control motor assy [2].

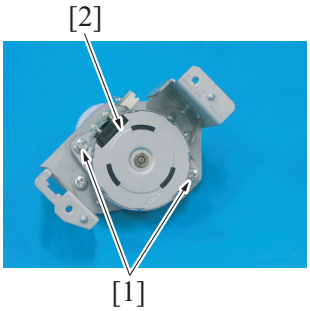


6. Remove two screws [1], and remove the paper receiving control motor [2].

7. To reinstall, reverse the order of removal.

### 6.10.24 Side stapler movement motor (M13) (FS-534/FS-534SD)

1. Remove the finisher from the main body.
   G.6.10.6 Finisher (FS-534/FS-534SD)
2. Remove the rear cover.
   G.6.10.1 Rear cover (FS-534/FS-534SD)
3. When the saddle unit is attached, open the front door and pull out the saddle unit.

4. Disconnect the connector [1].

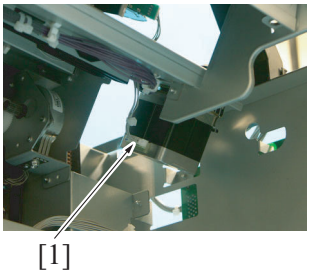


5. Remove two screws [1], and remove the side stapler movement motor [2].

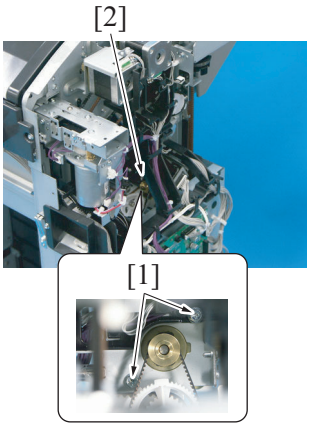


6. To reinstall, reverse the order of removal.

## 6.11 Disassembly/reassembly procedure (SD-511)

### 6.11.1 Front cover (SD-511)

1. Remove the screw [1], and remove the jam clearing dial [2].
2. Remove four screws [3], and remove the front cover [4].

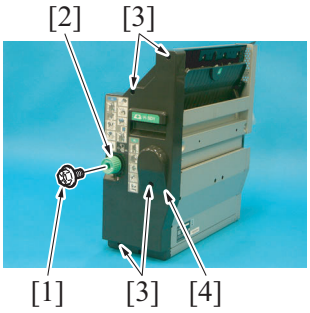


3. To reinstall, reverse the order of removal.

### 6.11.2 Paper exit tray (SD-511)

1. Remove the pin [1], and remove the exit lever [2].



2. Remove the paper exit tray [1].

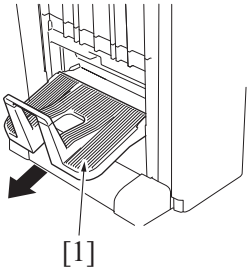


3. To reinstall, reverse the order of removal.

### 6.11.3 Staple unit (SD-511)

1. Remove the saddle unit.
   G.6.10.10 Saddle unit (FS-534SD)
2. Remove the front cover.
   G.6.11.1 Front cover (SD-511)

3. Remove four screws [1], and remove the plate [2].

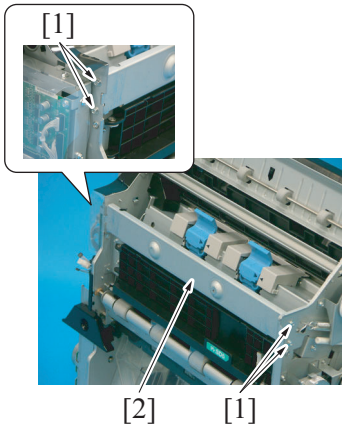


4. Remove three screws [1], and remove the tri-folding guide motor assy [2].

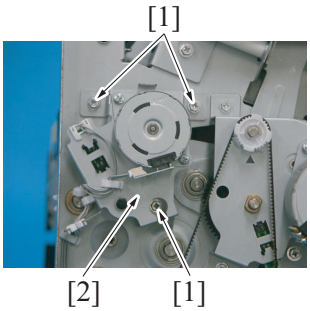


5. Remove four screws [1], and remove the conveyance assy [2].

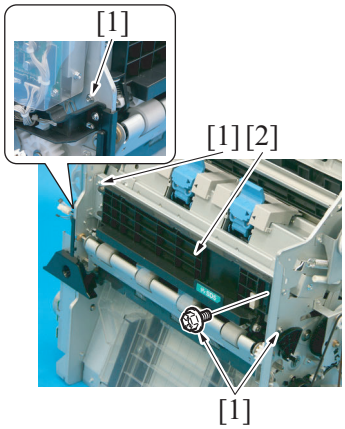

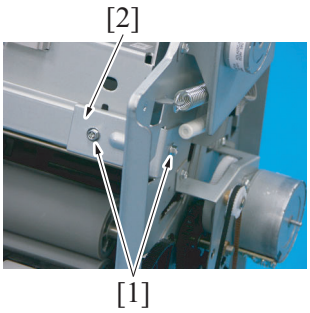


6. Remove two screws [1], and remove the plate [2].

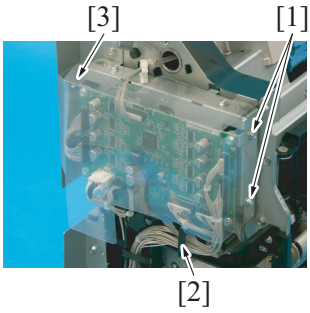


7. Remove two screws [1].
8. Detach the board support film [3] from the harness guide tabs [2].

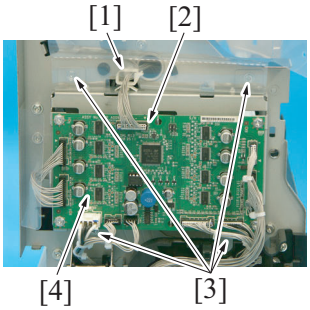


9. Remove the harness from the wire saddle [1].
10. Disconnect the connector [2].
11. Remove four screws [3], and remove the SD drive board assy [4].

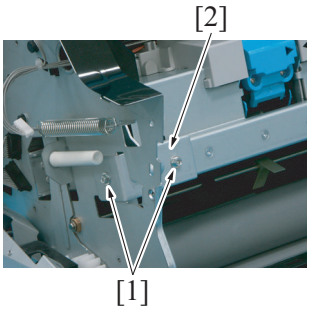


12. Remove two screws [1], and remove the plate [2].

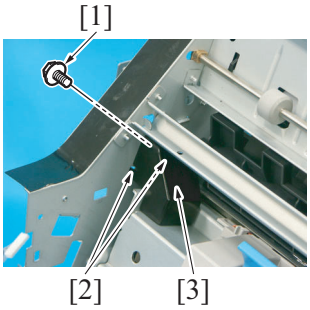


13. Remove the screw [1].
14. Release two tabs [2], and remove the cover [3].

15. Disconnect the connector [1].

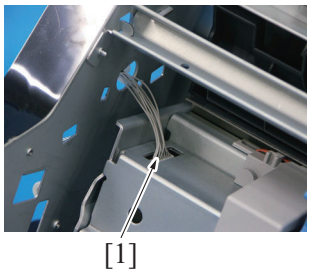


16. Remove two screws [1], and remove the staple unit [2].

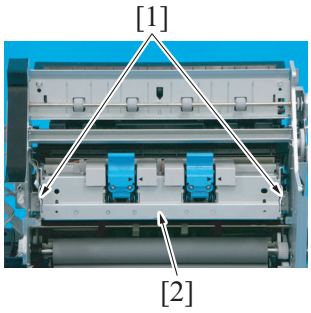


17. To reinstall, reverse the order of removal.

### 6.11.4 SD drive board (SDDB) (SD-511)

1. Remove the saddle unit.
G.6.10.10 Saddle unit (FS-534SD)

2. Remove two screws [1].
3. Remove the board support film [3] from the harness guide [2].

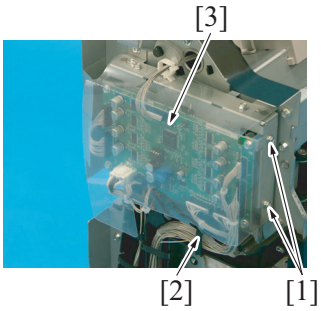


4. Disconnect all the connectors from the SD drive board.
5. Remove four screws [1].
6. Detach the SD drive board [3] from the two tabs [2].

**NOTE**
- **When the SD drive board (SDDB) has been replaced, be sure to remount EEPROM (U3) [4].**
**Remove EEPROM (U3) [4] from the old SD drive board and mount it on the new SD drive board.**

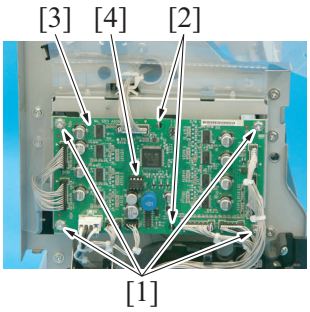


**NOTE**
- **When mounting EEPROM (U3), align the notches (indicated by “A” in the illustration).**

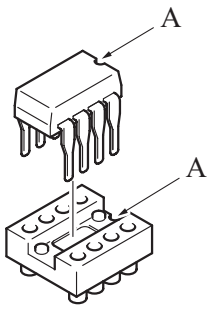


7. To reinstall, reverse the order of removal.

**NOTE**
- **After replacing the SD drive board, be sure to install the latest firmware.**

### 6.11.5 SD transport motor (M1) (SD-511)

1. Remove the saddle unit.
   G.6.10.10 Saddle unit (FS-534SD)
2. Remove the front cover.
   G.6.11.1 Front cover (SD-511)

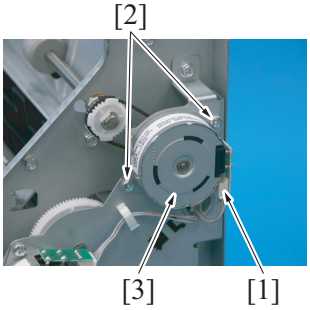


3. Disconnect the connector [1].
4. Remove two screws [2], and remove the SD transport motor [3].
5. To reinstall, reverse the order of removal.

### 6.11.6 Paper discharge control motor (M2) (SD-511)

1. Remove the saddle unit.
   G.6.10.10 Saddle unit (FS-534SD)
2. Remove the front cover.
   G.6.11.1 Front cover (SD-511)

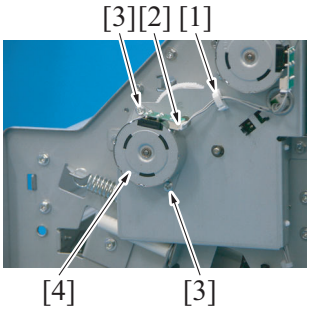


3. Remove the harness from the wire saddle [1], and disconnect the connector [2].
4. Remove two screws [3], and remove the paper discharge control motor [4].
5. To reinstall, reverse the order of removal.

### 6.11.7 Alignment motor (M3) (SD-511)

1. Remove the saddle unit.
   G.6.10.10 Saddle unit (FS-534SD)
2. Remove the front cover.
   G.6.11.1 Front cover (SD-511)

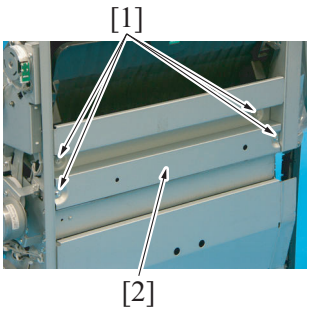


3. Remove four screws [1], and remove the plate [2].

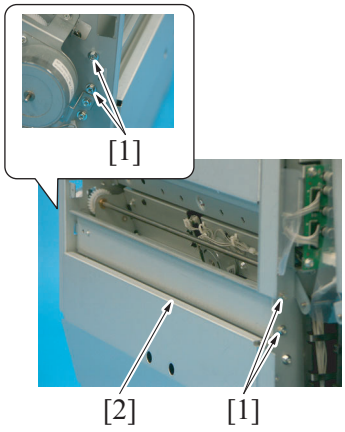


4. Remove four screws [1], and remove the plate [2].

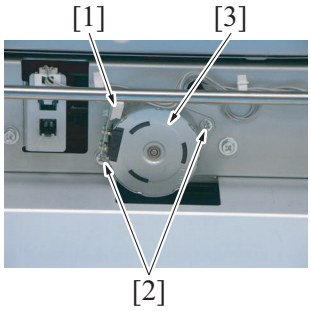


5. Disconnect the connector [1].
6. Remove two screws [2], and remove the alignment motor [3].

7. To reinstall, reverse the order of removal.

### 6.11.8 Stopper drive motor (M4) (SD-511)

1. Remove the saddle unit.
   G.6.10.10 Saddle unit (FS-534SD)
2. Remove the front cover.
   G.6.11.1 Front cover (SD-511)

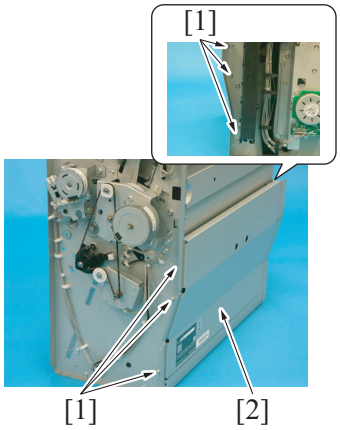


3. Remove six screws [1], and remove the plate [2].

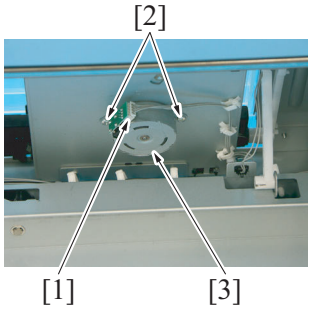


4. Disconnect the connector [1].
5. Remove two screws [2], and remove the stopper drive motor [3].

6. To reinstall, reverse the order of removal.

### 6.11.9 Center fold roller motor (M5) (SD-511)

1. Remove the saddle unit.
   G.6.10.10 Saddle unit (FS-534SD)

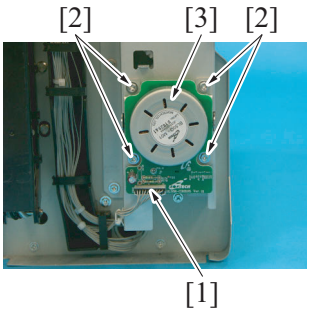


2. Disconnect the connector [1].
3. Remove four screws [2], and remove the center fold roller motor [3].

4. Reinstall the above parts following the removal steps in reverse.

### 6.11.10 Tri-folding guide motor (M6) (SD-511)

1. Remove the saddle unit.
   G.6.10.10 Saddle unit (FS-534SD)
2. Remove the front cover.
   G.6.11.1 Front cover (SD-511)

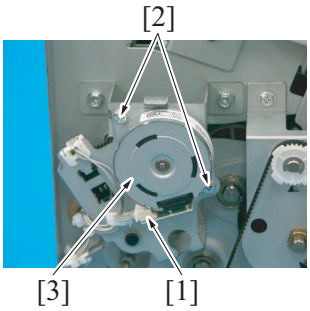


3. Disconnect the connector [1].
4. Remove two screws [2], and remove the tri-folding guide motor [3].

5. To reinstall, reverse the order of removal.

### 6.11.11 SD paddle motor (M7) (SD-511)

1. Remove the saddle unit.
   G.6.10.10 Saddle unit (FS-534SD)
2. Remove the front cover.
   G.6.11.1 Front cover (SD-511)

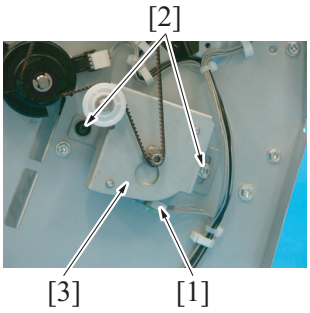


3. Disconnect the connector [1].
4. Remove two screws [2], and remove the SD paddle motor assy [3].

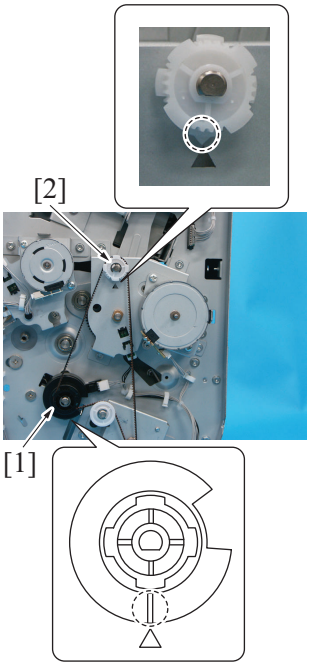


**NOTE**

- **When reinstalling the belt, align the portions of the gear [1] and the gear [2] indicated in the illustration with the triangular marking on the metal plate. Then, install the belt.**

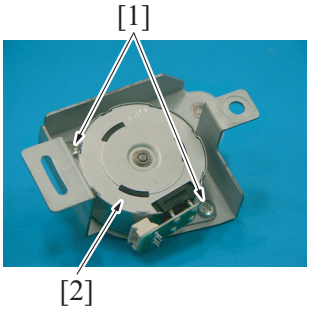


5. Remove two screws [1], and remove the SD paddle motor [2].

6. To reinstall, reverse the order of removal.

### 6.11.12 Center fold guide motor (M8) (SD-511)

1. Remove the saddle unit.
   G.6.10.10 Saddle unit (FS-534SD)
2. Remove the front cover.
   G.6.11.1 Front cover (SD-511)

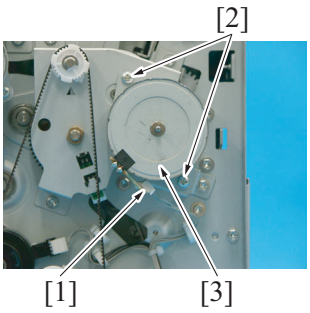


3. Disconnect the connector [1].
4. Remove two screws [2], and remove the center fold guide motor [3].

5. To reinstall, reverse the order of removal.

### 6.11.13 Center fold knife motor (M9) (SD-511)

1. Remove the saddle unit.
   G.6.10.10 Saddle unit (FS-534SD)
2. Remove the front cover.
   G.6.11.1 Front cover (SD-511)

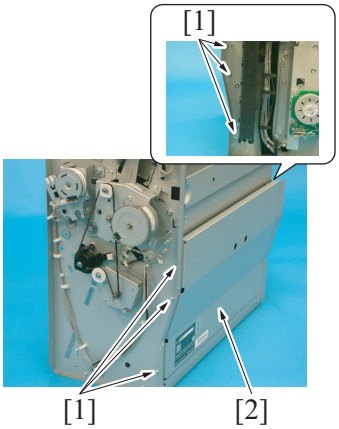


3. Remove six screws [1], and remove the plate [2].

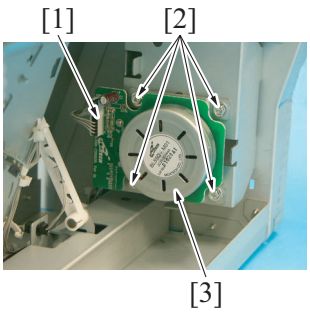


4. Disconnect the connector [1].
5. Remove four screws [2], and remove the center fold knife motor [3].

6. To reinstall, reverse the order of removal.

### 6.11.14 Stopper solenoid (SD1) (SD-511)

1. Remove the saddle unit.
   G.6.10.10 Saddle unit (FS-534SD)
2. Remove the front cover.
   G.6.11.1 Front cover (SD-511)

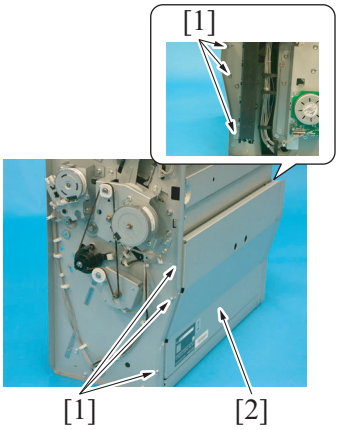


3. Remove six screws [1], and remove the plate [2].

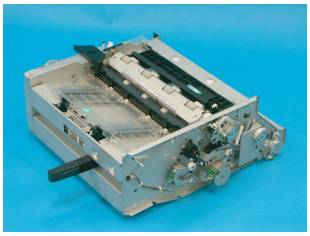

4. Place the saddle unit as shown in the illustration.

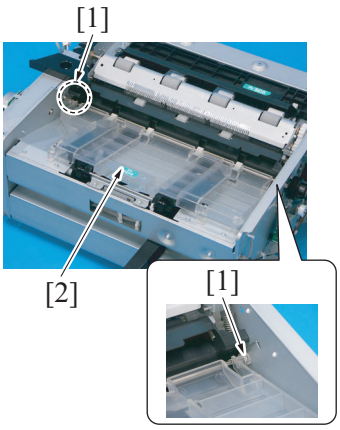


5. Remove two stoppers [1], and remove the guide plate [2].

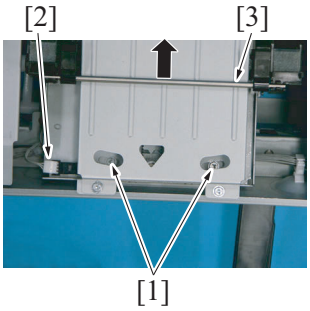


6. Slide the lever unit [3] upward.
7. Remove two screws [1], and disconnect the connector [2].

8. Raise the saddle unit.

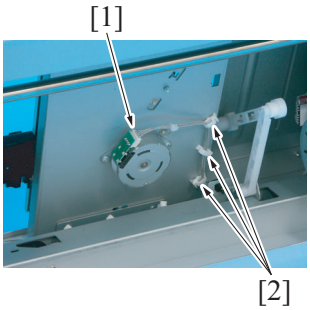


9. Disconnect the connector [1], and remove the harness from three wire saddles [2].

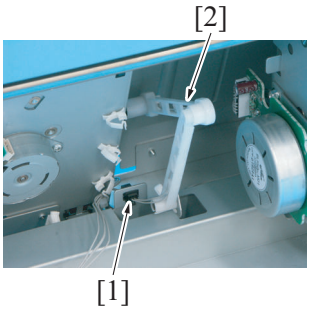


10. Disconnect the connector [1], and remove the drive lever [2].

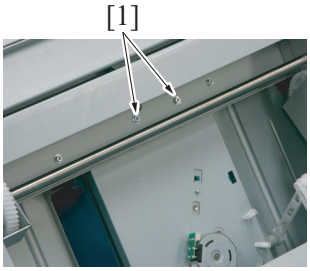


11. Remove two screws [1].

12. Remove the guide plate assy [1].

**NOTE**

- **When reinstalling the guide plate assy, perform mechanical adjustment.**
  **I.19.1.1 Half-fold skew adjustment**

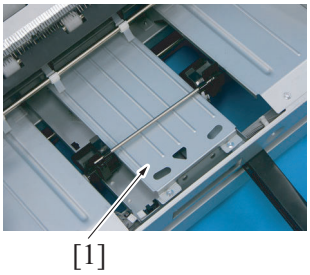


13. Remove four screws [1], and remove the plate [2].

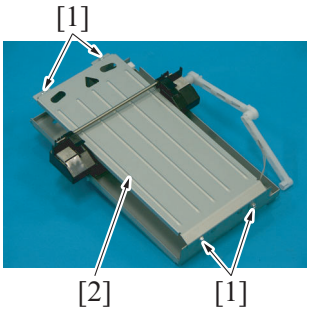


14. Remove two E-rings [1], and remove the stopper guide [2].

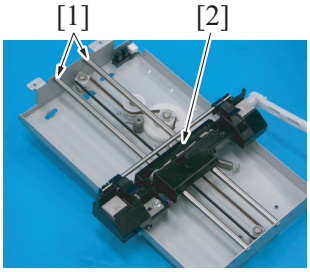


**NOTE**

- **When reinstalling the stopper guide, fit the belt into the stopper guide groove [1].**

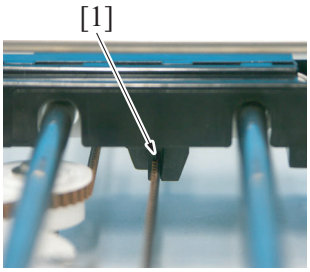


15. Remove the screw [1], and remove the plate [2].

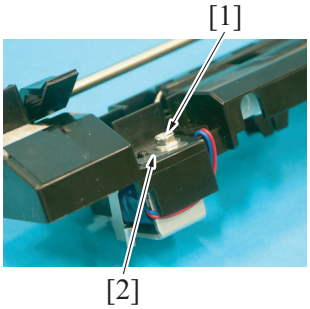

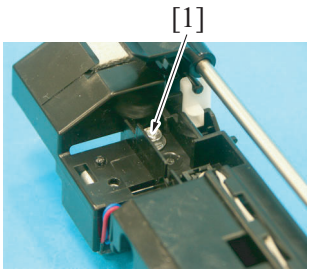


*16.* Remove the screw [1].

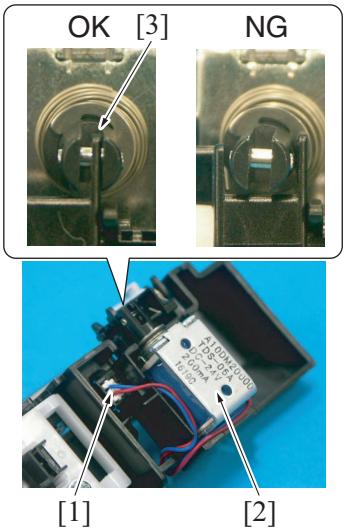


*17.* Disconnect the connector [1], and remove the stopper solenoid [2].
**NOTE**
- **When reinstalling the stopper solenoid, fit its tip into the place [3] shown in the illustration.**

*18.* To reinstall, reverse the order of removal.

## 6.12 Disassembly/reassembly procedure (PK-520)

### 6.12.1 Punch kit (PK-520)

*1.* Remove the finisher from the main body.
G.6.10.6 Finisher (FS-534/FS-534SD)

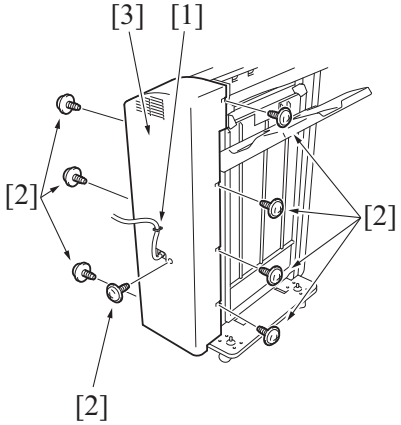


*2.* Remove the harness from the wire saddle [1].
*3.* Remove eight screws [2], and remove the rear cover [3].

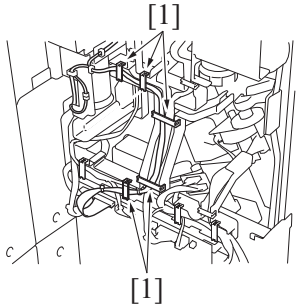


*4.* Remove the harness from five wire saddles [1].

5. Disconnect the connector [1].

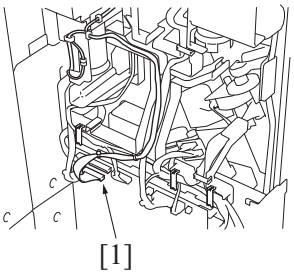


6. Remove the screw [1], and remove the punch kit [2].

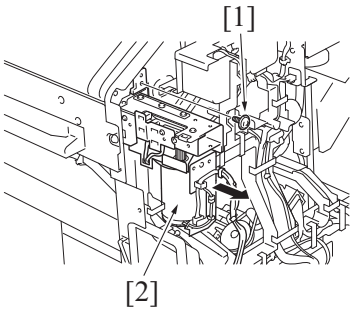


7. To reinstall, reverse the order of removal.

## 6.13 Disassembly/reassembly procedure (SC-508)

### 6.13.1 DSC board/1 (for front side) (SC-508)

1. Remove the lower rear cover.
   G.5.2.20 Lower rear cover
2. Remove the DSC board/2. (Option)
   G.6.13.2 DSC board/2 (for back side) (SC-508)
3. Remove the dual scan board. (Option)
   G.6.3.11 Dual scan board (DSIPB) (DF-704)

4. Remove three screws [1], and remove the DSC board/1 [2].

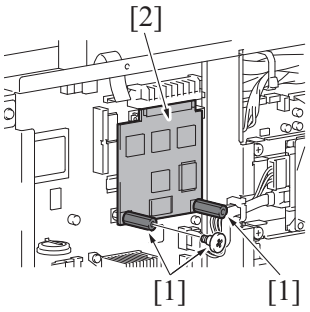


5. To reinstall, reverse the order of removal.

### 6.13.2 DSC board/2 (for back side) (SC-508)

1. Remove the lower rear cover.
   G.5.2.20 Lower rear cover

2. Remove two screws [1], and remove the DSC board/2 [2].

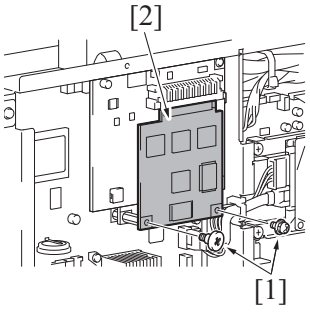


3. To reinstall, reverse the order of removal.

## 6.14 Disassembly/reassembly procedure (UK-211)

### 6.14.1 Upgrade kit (UK-211)

1. Remove the lower rear cover.

G.5.2.20 Lower rear cover

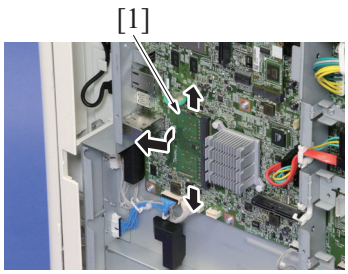


2. Remove the memory board [1] on the MFP board.

3. To reinstall, reverse the order of removal.

## 6.15 Disassembly/reassembly procedure (UK-212)

### 6.15.1 Upgrade kit (UK-212)

1. Remove the rear right cover.
G.5.2.18 Rear right cover

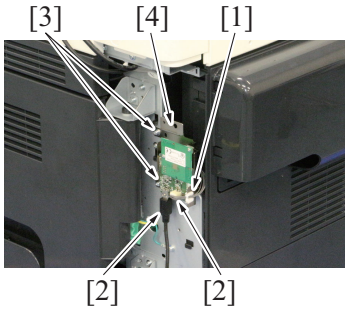


2. Remove the harness from the edge cover [1], and disconnect two connectors [2].
3. Remove two screws [3], and remove the upgrade kit [4].

4. To reinstall, reverse the order of removal.

## 6.16 Disassembly/reassembly procedure (FK-515)

### 6.16.1 FAX board (line 3), FAX board (line 4) (FK-515)

**NOTE**

- **When removing the FAX Kit, make sure of the correct line associated with the FAX Kit to be removed before removing the line.**
- **When installing a new board, check the FAX board switch and make settings involving the line settings.**

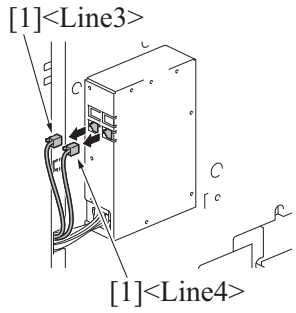


1. Disconnect the modular cable [1].

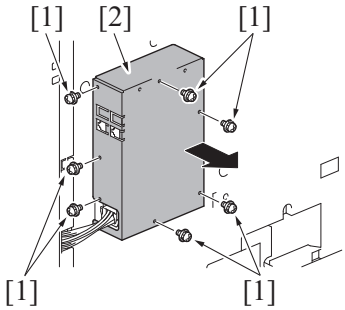


2. Remove seven screws [1], and remove the cover [2].

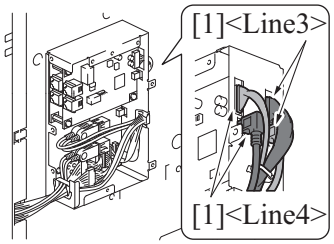


*3.* Disconnect four connectors [1].
**NOTE**
- **If the FAX board of Line 4 only is to be removed, there is no need to disconnect the Line 3 connector.**

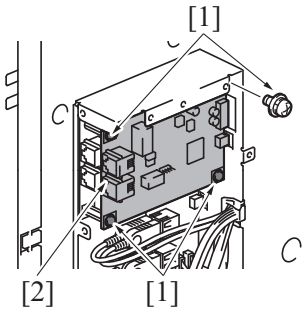


*4.* Remove four screws [1], and remove the FAX board (Line4) [2].

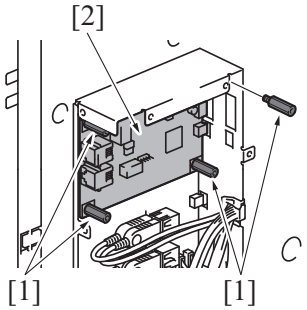


*5.* Remove four screws [1], and remove the FAX board (Line3) [2].

*6.* To reinstall, reverse the order of removal.

## 6.17 Disassembly/reassembly procedure (FK-514)

### 6.17.1 FAX Kit (Line1), FAX Kit (Line2) (FK-511)

**NOTE**
- **Following describe the procedure to be followed when removing the FAX Kit (Line 1) and FAX Kit (Line 2) at the same time. When removing the FAX Kit, make sure of the correct line associated with the FAX Kit to be removed before removing the line.**
- **When installing a new board, check the FAX board switch and make settings involving the line settings.**

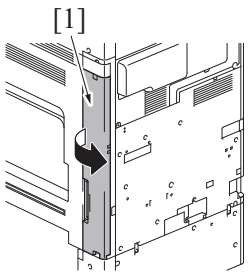


*1.* Open the cover [1].

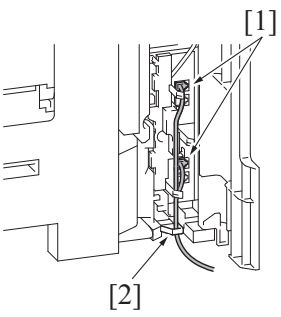


*2.* Disconnect the modular cable [1], and remove the modular cable from the guide [2].

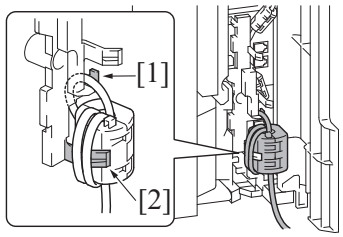


**NOTE**
**If there is a ferrite core attached to the modular cable when it is installed, follow the instructions and attach a ferrite core to the modular cable.**
- **Line 1 (LINE): Hook the cable onto the cable hook [1], and align the protrusion [2] between the ferrite core and cable.**

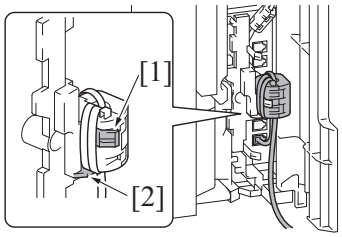


**NOTE**
**If there is a ferrite core attached to the modular cable when it is installed, follow the instructions and attach a ferrite core to the modular cable.**
- **Line 1 (TEL): Align the protrusion [1] between the ferrite core and cable, and place the ferrite core on the mounting seat [2].**

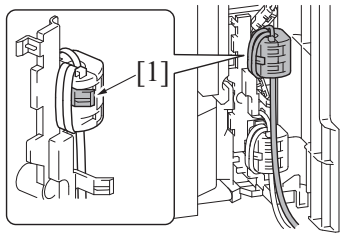


**NOTE**
**If there is a ferrite core attached to the modular cable when it is installed, follow the instructions and attach a ferrite core to the modular cable.**
- **Line 2 (LINE): Align the protrusion [1] between the ferrite core and cable.**

*3.* Remove the screw [1], and remove the connector cover [2].
**NOTE**
- **When installing the connector cover, insert the protrusion [3] on the connector cover into the holes [4] by taking care not to trap the harness.**

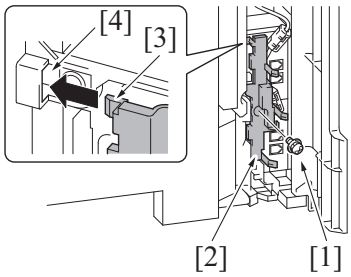


*4.* Remove the USB cable and harness from the harness guide [1].
*5.* Disconnect two connectors [2] and two USB cables [3].

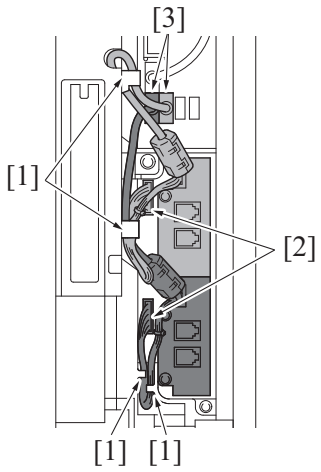

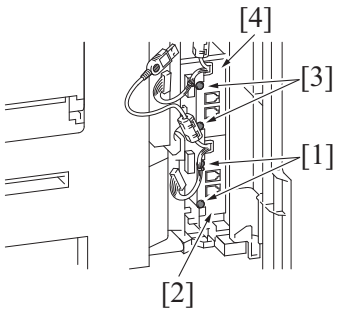


6. Remove two screws [1], and remove the Fax Kit (Line1) [2].
7. Remove two screws [3], and remove the Fax Kit (Line2) [4].
8. To reinstall, reverse the order of removal.

### 6.17.2 FAX Kit (Line1), FAX Kit (Line2) (FK-514) (with MK-742)

**NOTE**

- **Following describe the procedure to be followed when removing the FAX Kit (Line 1) and FAX Kit (Line 2) at the same time. When removing the FAX Kit, make sure of the correct line associated with the FAX Kit to be removed before removing the line.**
- **When installing a new board, check the FAX board switch and make settings involving the line settings.**

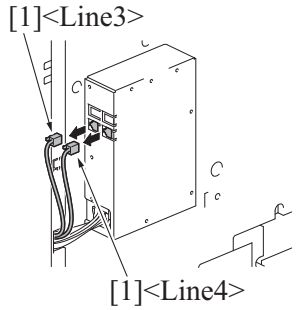


1. Disconnect the modular cable [1].

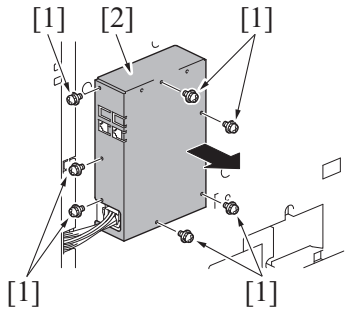


2. Remove seven screws [1], and remove the cover [2].

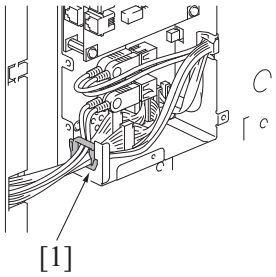


3. Remove the USB cable and harness from the wire saddle [1].

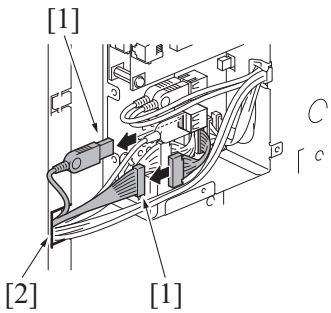


4. Disconnect two connectors [1] of the Line 2.
5. Remove the harness and USB cable from the cut-out section [2] in the cover

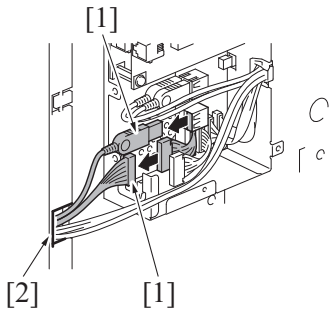


6. Disconnect two connectors [1] from Line 1.
7. Remove the harness and USB cable from the cut-out section [2] in the cover

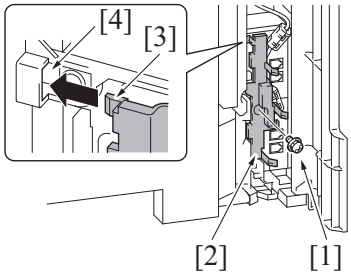


8. Remove the screw [1], and remove the connector cover [2].
**NOTE**
- **When installing the connector cover, insert the protrusion [3] on the connector cover into the holes [4] by taking care not to trap the harness.**

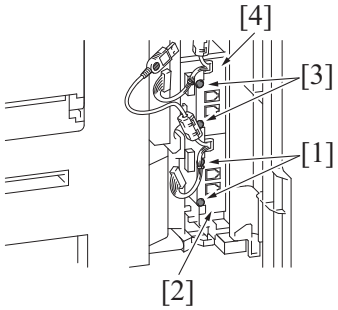


9. Remove two screws [1], and remove the Fax Kit (Line1) [2].
10. Remove two screws [3], and remove the Fax Kit (Line2) [4].

11. To reinstall, reverse the order of removal.

## 6.18 Disassembly/reassembly procedure (HD-524)

### 6.18.1 Hard disk (B) (HDD-524)

1. Remove the lower rear cover.
G.5.2.20 Lower rear cover
2. Remove the protective sheet.
G.5.2.21 Protective sheet

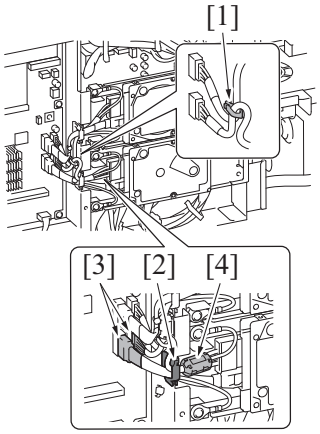


3. Remove the harness from the wire saddle [1].
4. Remove the harness from the edge cover [2].
5. Disconnect two connectors [3].
**NOTE**
- **When the ferrite core [4] has been installed, be sure to install the hard disk at the position shown in the illustration.**
- **Ensure that the cables do not contact with the MFP board at connecting the connectors [3].**
- **When the video interface kit VI-508 has been installed, ensure that the cables do not contact with the relay circuit board at connecting the connectors [3].**

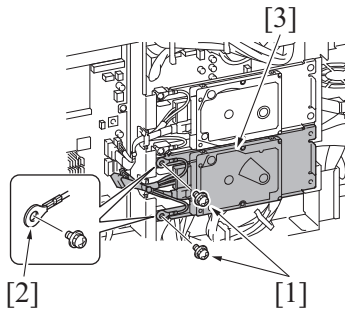


6. Remove two screws [1], and remove two ground wires [2].
7. Remove the hard disk assy [3].

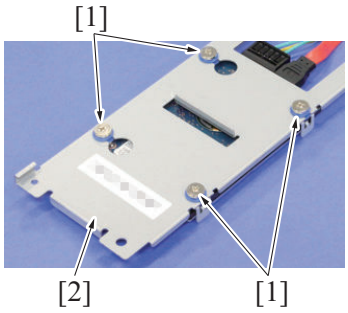


8. Remove four screws [1], and remove the metal plate [2].

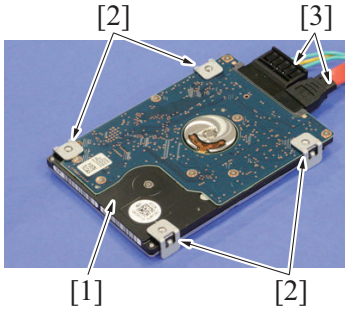


9. Remove four metal plates [2] and two connectors [3] from the hard disk [1].

10. To reinstall, reverse the order of removal.
11. After replacing, conduct hard disk mirroring.
[State Confirmation] -> [Memory/Storage Adjustment] -> [HDD Mirroring Rebuild]

## 6.19 Disassembly/reassembly procedure (CU-101)

### 6.19.1 Clean unit cover

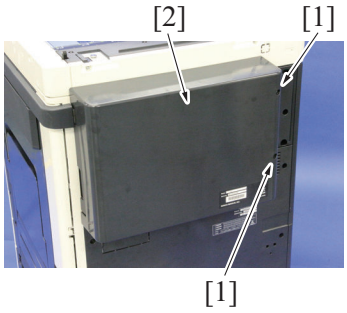


1. Remove two screws [1], and remove the clean unit cover [2].

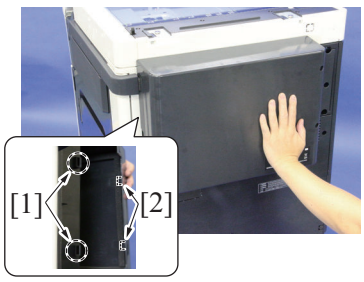


**NOTE**
- **When installing the clean unit cover, fit the clean unit cover tabs [2] into the clean unit holes [1], hold it in place and secure the screws.**

2. To reinstall, reverse the order of removal.

### 6.19.2 Clean unit (CU-101)

1. Remove the clean unit cover.
   G.6.19.1 Clean unit cover

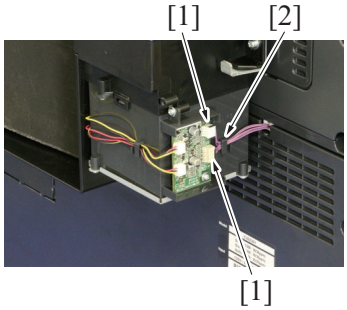


2. Disconnect two connectors [1], and remove the harness from the harness guide [2].

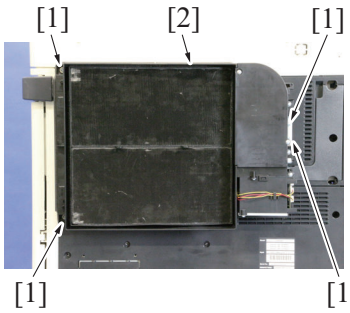


3. Remove the four screws [1], and remove the clean unit [2].

4. To reinstall, reverse the order of removal.

### 6.19.3 Clean unit drive board (CUDB)

1. Remove the clean unit cover.
   G.6.19.1 Clean unit cover

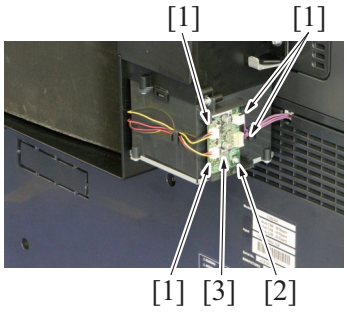


2. Disconnect four connectors [1].
3. Remove the screw [2], and remove the clean unit drive board [3].

4. To reinstall, reverse the order of removal.

### 6.19.4 Exhaust fan/1 (FM14)

1. Remove the clean unit cover.
   G.6.19.1 Clean unit cover

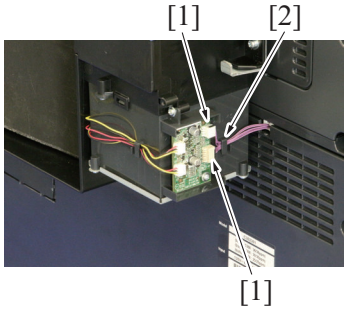


2. Disconnect two connectors [1], and remove the harness from the harness guide [2].

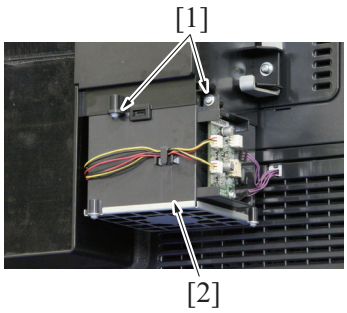


3. Remove two screws [2], and remove the exhaust fan assy [3].

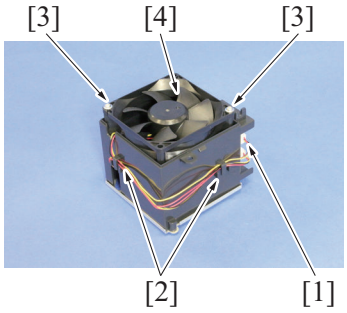


4. Disconnect the connector [1], and remove the harness from two harness guides [2].
5. Remove two screws [3], and remove the exhaust fan/1 [4].

6. To reinstall, reverse the order of removal.

### 6.19.5 Exhaust fan/2 (FM15)

1. Remove the clean unit cover.
G.6.19.1 Clean unit cover

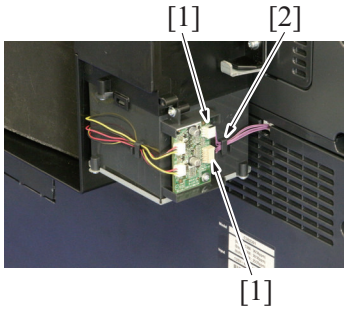


2. Disconnect two connectors [1], and remove the harness from the harness guide [2].

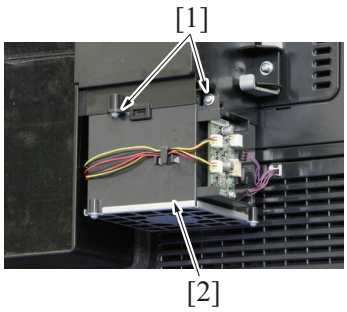


3. Remove two screws [1], and remove the exhaust fan assy [2].

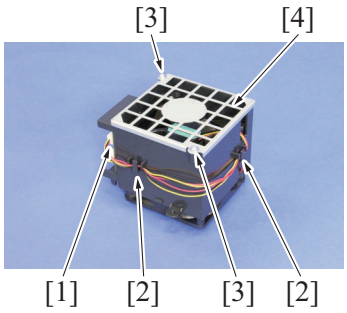


4. Disconnect the connector [1], and remove the harness from two harness guides [2].
5. Remove two screws [3], and remove the exhaust fan cover [4].

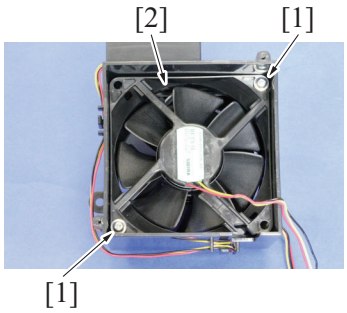


6. Remove two screws [1], and remove the exhaust fan/2 [2].

7. To reinstall, reverse the order of removal.

### 6.19.6 Suction fan (FM16)

1. Remove the clean unit cover.
   G.6.19.1 Clean unit cover
2. Remove the clean unit.
   G.6.19.2 Clean unit (CU-101)
3. Remove the lower rear cover.
   G.5.2.20 Lower rear cover

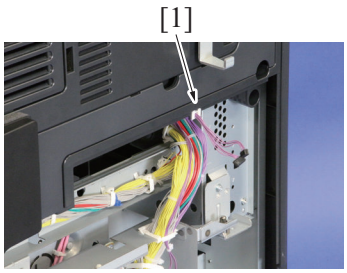


4. Remove the harness from the edge cover [1].

5. Remove the upper rear cover.
   G.5.2.22 Upper rear cover

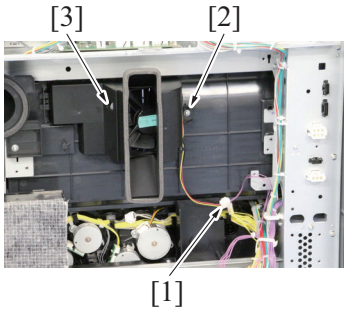


6. Disconnect the connector [1].
7. Remove the screw [2], and remove the suction fan assy [3].

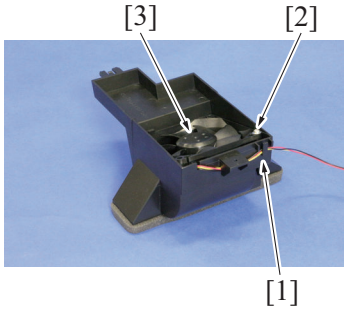


8. Remove the harness from the harness guide [1].
9. Remove the screw [2], and remove the suction fan [3].

10. To reinstall, reverse the order of removal.

### 6.19.7 Deodorant filter/UFP filter

1. Remove the clean unit cover.
   G.6.19.1 Clean unit cover

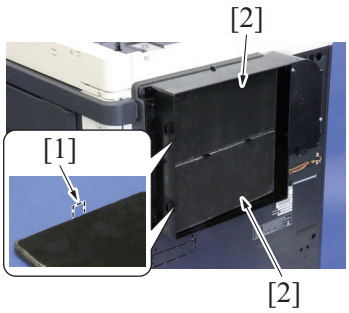


2. Hold the pull tab [1], and remove the deodorant filter [2].

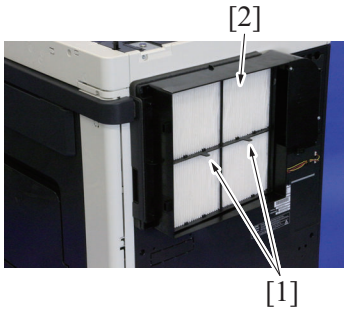


3. Hold the pull tab [1], and remove the UPF filter [2].

4. To reinstall, reverse the order of removal.

## 6.20 Disassembly/reassembly procedure (KP-101)

### 6.20.1 Keypad (KP-101)

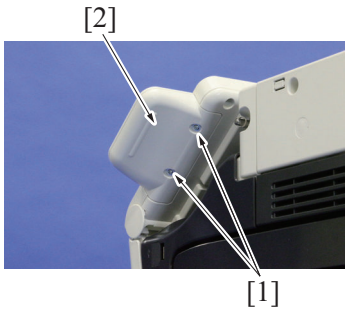


1. Remove the two screws [1], and remove the cover [2].

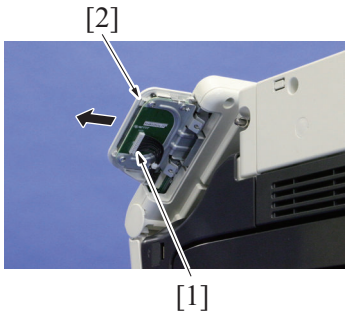


2. Disconnect the connector [1] and remove the keypad [2].

3. To reinstall, reverse the order of removal.

# 7. COMMERCIALLY AVAILABLE PARTS

## 7.1 Installing the key counter

### 7.1.1 Configuration

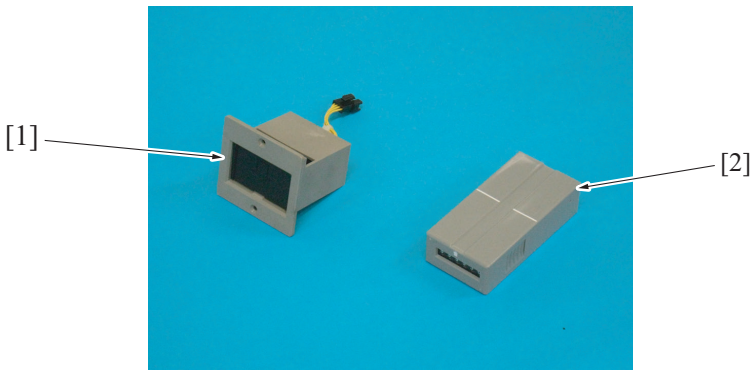


| | | | |
|---|---|---|---|
| [1] | Key counter socket | [2] | Key counter |

### 7.1.2 Procedure

**NOTE**

- **When mounting the key counter, the optional key counter kit KIT-1 (4623-474) or key counter kit KIT-CF (4623-484; only for Europe and Japan) is necessary.**
- **Procedure for directly mounting the key counter to the main unit is described below.**
  **For mounting the key counter to the optional working table WT-506, refer to WT-506 installation manual.**

#### (1) Key counter kit KIT-1 (4623-474)

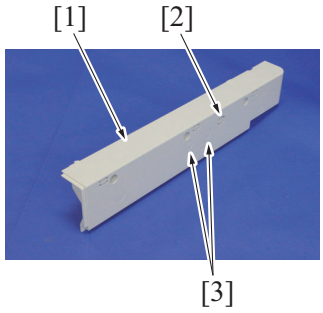


1. Remove the scanner right cover [1].
   G.5.2.2 Scanner right cover
2. Cut out the knockouts [2] of the scanner right cover.
3. Remove two caps [3].

4. Remove the upper right cover.
   G.5.2.19 Upper right cover

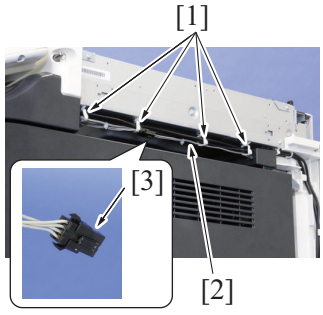


5. Remove the harness [2] for the key counter from the four wire saddles [1].
6. Remove the connector cover [3].

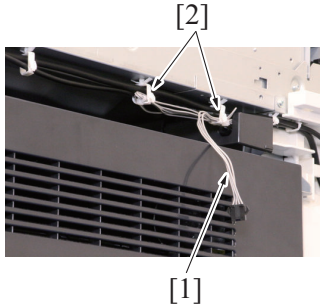


7. Route the harness [1] through two wire saddles [2] as shown in the illustration.

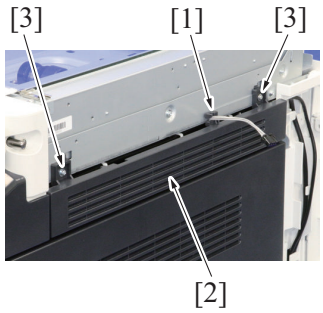


8. Route the harness through the hook [1] located at the middle of the upper right cover, and reinstall the upper right cover [2] using two screws [3].

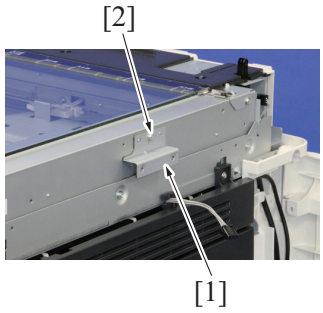


9. Prepare one screw (M3 x 6).
10. Install the mounting plate (4623 1670 ##) [1] included in the key counter kit with the prepared screw [2].

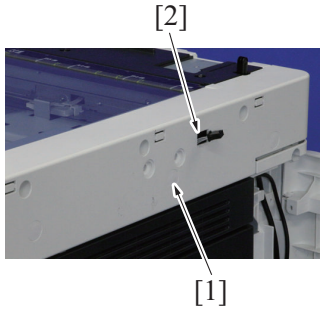


11. Mount the scanner right cover [1], and insert the harness for the key counter through the hole [2] knockouts were removed from.

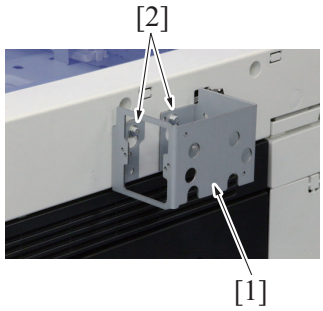


12. Using two screws [2], secure the counter mounting bracket [1].
**NOTE**
- **Secure the counter mounting bracket passing the connector into the bracket.**
- **Use the two long screws (V116 0418 14: M4 x 18) in the key counter kit to secure the counter mounting bracket.**

13. Insert the key counter socket [1].
14. Mount the edge cover [2] to the counter mounting bracket and set the harness to the edge cover.

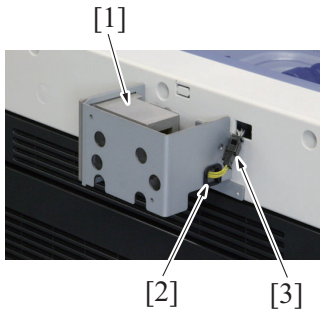


15. Connect the key counter socket connector [1].

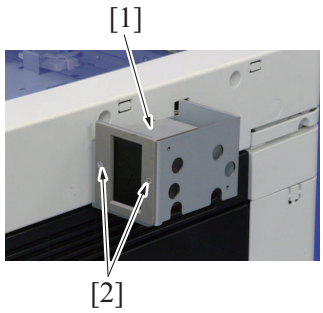


16. Using two screws [2], secure the key counter socket [1].

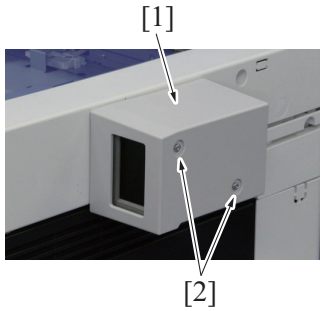


17. Using two screws [2], secure the key counter cover [1].

18. Select [Service Mode] -> [Billing Setting] -> [Management Function Choice] -> [Key Counter Only] or [Vendor 2] (Use the key counter and the vendor 2 together). Then, set the relative items.
For details on setting, see "I.8.3.2 Management Function Choice".

### (2) Key counter kit KIT-CF (4623-484)

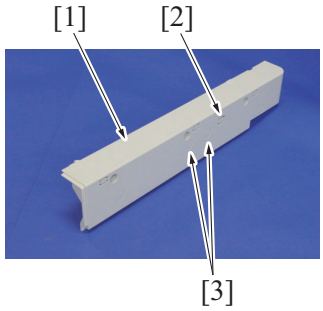


1. Remove the scanner right cover [1].
G.5.2.2 Scanner right cover
2. Cut out the knockouts [2] of the scanner right cover.
3. Remove two caps [3].

4. Remove the upper right cover.
G.5.2.19 Upper right cover

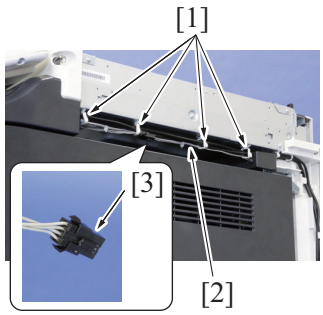


5. Remove the harness [2] for the key counter from the four wire saddles [1].
6. Remove the connector cover [3].

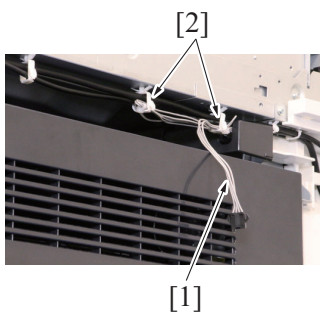


7. Route the harness [1] through two wire saddles [2] as shown in the illustration.

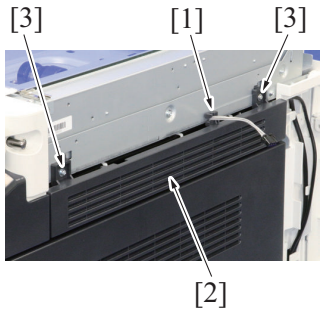


8. Route the harness through the hook [1] located at the middle of the upper right cover, and reinstall the upper right cover [2] using two screws [3].

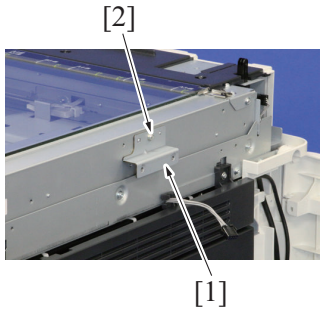


9. Prepare one screw (M3 x 6).
10. Install the mounting plate (4623 1670 ##) [1] included in the key counter kit with the prepared screw [2].

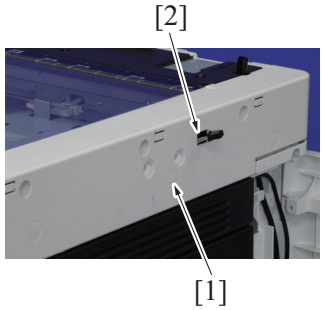


11. Mount the scanner right cover [1], and insert the harness for the key counter through the hole [2] knockouts were removed from.

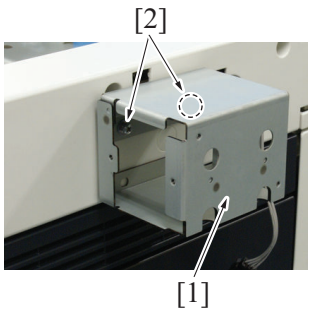


12. Using two screws [2], secure the counter mounting bracket [1].
**NOTE**
- **Secure the counter mounting bracket passing the connector into the bracket.**
- **Use the two long screws (V116 0418 14: M4 x 18) in the key counter kit to secure the counter mounting bracket.**

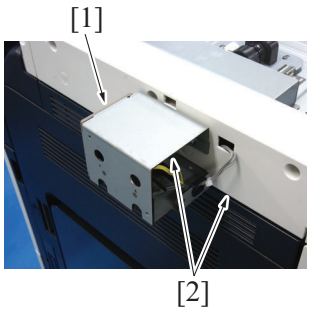


13. Insert the key counter socket [1].
14. Mount the edge cover [2] to the counter mounting bracket and set the harness to the edge cover.
15. Connect the key counter socket connector [3].

16. Using two screws [2], secure the key counter socket [1].

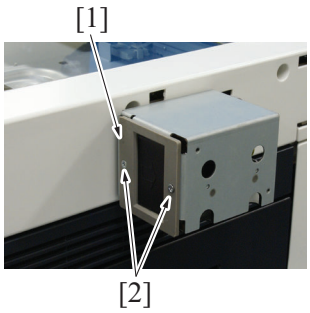


17. Using two screws [2], secure the key counter cover [1].

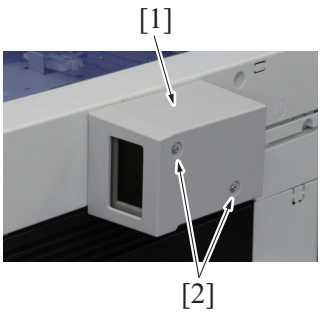


18. Select [Service Mode] -> [Billing Setting] -> [Management Function Choice] -> [Key Counter Only] or [Vendor 2] (Use the key counter and the vendor 2 together). Then, set the relative items.
For details on setting, see "I.8.3.2 Management Function Choice".

## 7.2 Installing the original size sensor/2 (Option)

1. Remove the scanner right cover.
G.5.2.2 Scanner right cover
2. Remove the original glass.
G.5.2.12 Original glass

3. Remove the harness from two wire saddles [1].

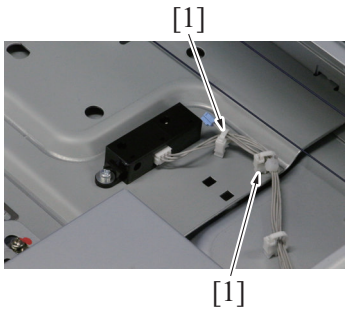


4. Connect the connector [2] to the original size sensor/2 [1].
5. Attach the harness to the wire saddle [3].
6. Fix the original size sensor/2 (PS205) [1] with screw [4].
**NOTE**
- **Refer to the Parts Guide Manual for the part numbers of the wire saddle, screws, and original size sensor.**

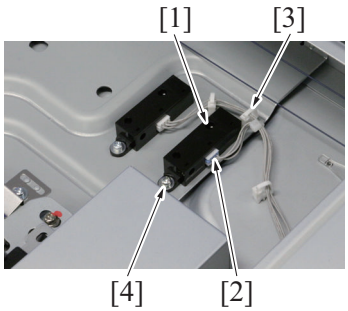

7. Select [Service Mode] -> [System 1] -> [Original Size Detection], and set the original glass to [Table2].

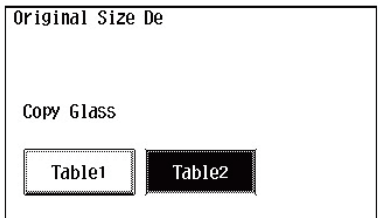


8. Select [Service Mode] -> [State Confirmation] -> [Sensor Check].

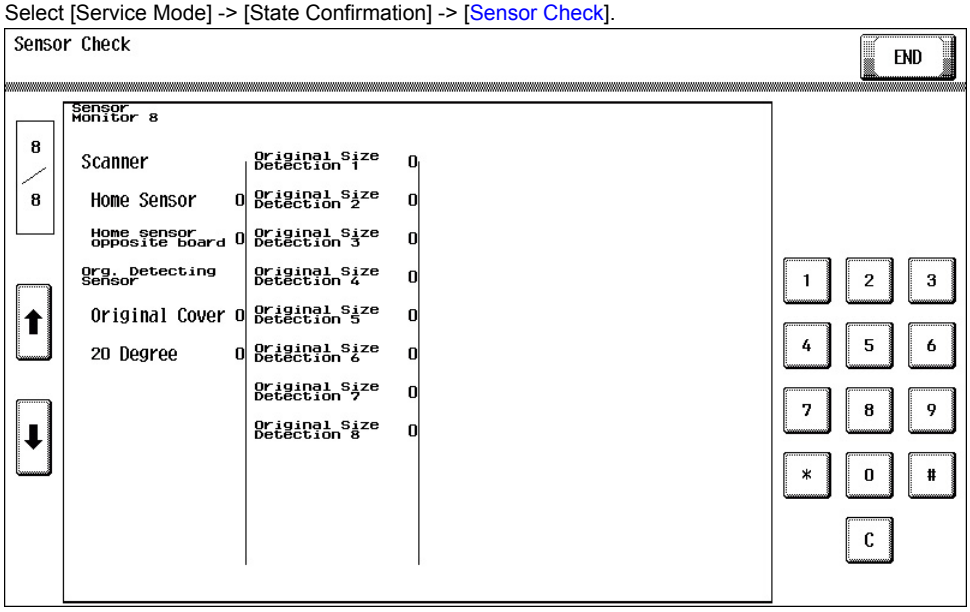


9. Set the original on the original glass, and check that the data for “Original Size Detection” changes from “0” to “1” on the screen.

# H CLEANING/LUBRICATION

## 1. bizhub C368/C308/C258

### 1.1 Cleaning parts list

| No. | Section | Part name | Ref. page |
|---|---|---|---|
| 1 | Processing section | Image Transfer Belt Unit | H.1.3.1 Image Transfer Belt Unit |
| 2 | | PH window | H.1.3.2 PH window |
| 3 | Tray 1 | Tray 1 feed roller | H.1.3.3 Tray 1 feed roller, tray 1 pick-up roller, tray 1 separation roller |
| 4 | | Tray 1 pick-up roller | |
| 5 | | Tray 1 separation roller | |
| 6 | Tray 2 | Tray 2 feed roller | H.1.3.4 Tray 2 feed roller, tray 2 pick-up roller, tray 2 separation roller |
| 7 | | Tray 2 pick-up roller | |
| 8 | | Tray 2 separation roller | |
| 9 | | Tray 2 transport roller | H.1.3.5 Tray 2 transport roller |
| 10 | Manual bypass tray | Manual bypass tray feed roller | H.1.3.6 Manual bypass tray feed roller |
| 11 | | Manual bypass tray separation roller | H.1.3.7 Manual bypass tray separation roller |
| 12 | Scanner section | Original glass | H.1.3.8 Original glass |
| 13 | | Scanner rails | H.1.3.9 Scanner rails |
| 14 | | Mirrors | H.1.3.10 Mirrors |
| 15 | | Lens | H.1.3.11 Lens |
| 16 | | CCD sensor | H.1.3.12 CCD sensor |

### 1.2 Lubrication parts list

**NOTE**

- **With this machine, the lubrication is not necessary.**

### 1.3 Cleaning procedure

**NOTE**

- **The alcohol described in the cleaning procedure of maintenance represents the isopropyl alcohol.**

#### 1.3.1 Image Transfer Belt Unit

1. Remove the transfer belt unit.
   F.6.4.3 Replacing the transfer belt unit

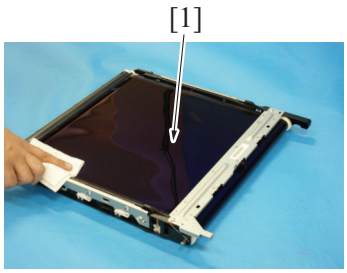


2. Using a hydro-wipe (65AA-99##), wipe the transfer belt [1].
   **NOTE**
   - **Do not wipe out with water.**
   - **Do not wipe out with any solvents.**

#### 1.3.2 PH window

1. Open the front door.
2. Remove the waste toner box.
   F.6.6.1 Replacing the waste toner box

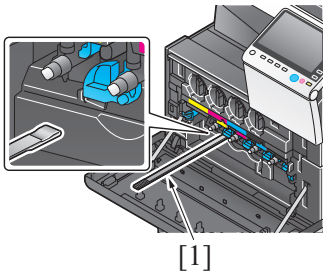


3. Clean the PH window by putting the PH window cleaning jig [1] back and forth a couple times.
   **NOTE**
   - **Clean every PH window of Y,M,C,K.**

### 1.3.3 Tray 1 feed roller, tray 1 pick-up roller, tray 1 separation roller

1. Remove the tray 1.
   G.5.2.23 Tray 1
2. Remove the tray 2.
   G.5.2.24 Tray 2

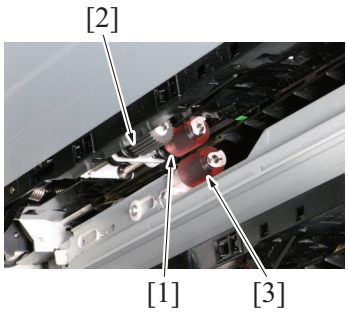


3. Using a cleaning pad dampened with alcohol, wipe the tray 1 feed roller [1], tray 1 pick-up roller [2], tray 1 separation roller [3] clean of dirt.

### 1.3.4 Tray 2 feed roller, tray 2 pick-up roller, tray 2 separation roller

1. Remove the tray 1.
   G.5.2.23 Tray 1
2. Remove the tray 2.
   G.5.2.24 Tray 2

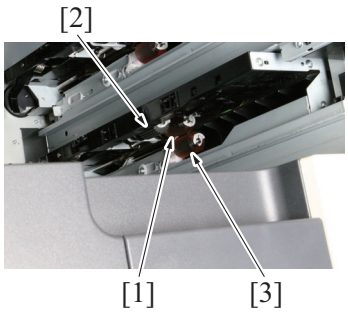


3. Using a cleaning pad dampened with alcohol, wipe the tray 2 feed roller [1], tray 2 pick-up roller [2], tray 2 separation roller [3] clean of dirt.

### 1.3.5 Tray 2 transport roller

1. Open the right door.

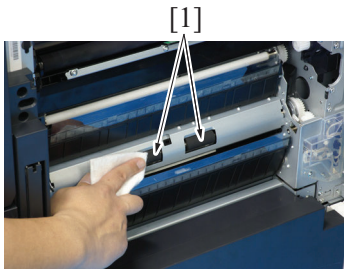


2. Using a cleaning pad dampened with alcohol, wipe the tray 2 transport rollers [1] clean of dirt.

### 1.3.6 Manual bypass tray feed roller

1. Open the right door.

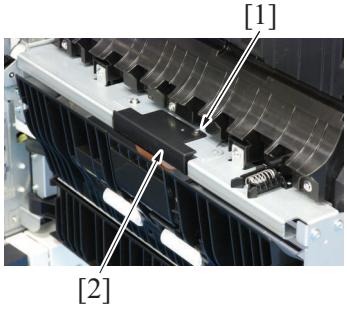


2. Remove the screw [1], and remove the feed roller cover [2].

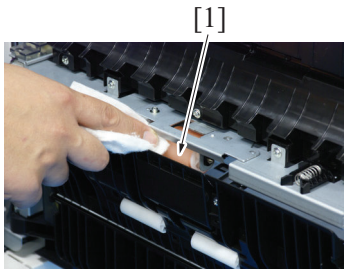


3. Using a cleaning pad dampened with alcohol, wipe the manual bypass tray feed roller [1] clean of dirt.

### 1.3.7 Manual bypass tray separation roller

1. Remove the manual bypass tray separation roller unit.
F.6.7.3 Replacing the manual bypass tray feed roller, manual bypass tray separation roller assy

2. Using a cleaning pad dampened with alcohol, wipe the manual bypass tray separation roller [1] clean of dirt.

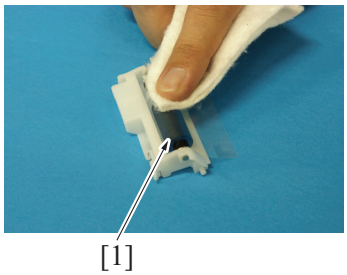


### 1.3.8 Original glass

1. Using a cleaning pad dampened with alcohol, wipe the original glass [1] clean of dirt.




2. Using a cleaning pad dampened with alcohol, wipe the document reading glass [1] clean of dirt.




### 1.3.9 Scanner rails

1. Remove the original glass.
G.5.2.12 Original glass

2. Using a cleaning pad dampened with alcohol, wipe the scanner rails [1] clean of dirt.
**NOTE**
- **Apply lubricant after cleaning.**

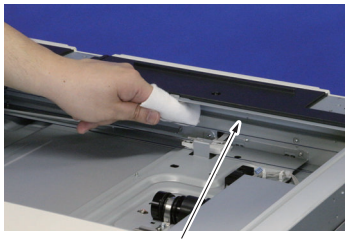


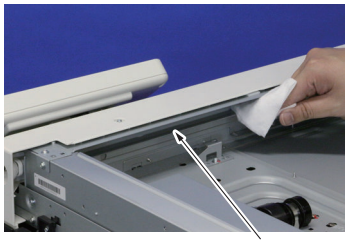


### 1.3.10 Mirrors

1. Remove the original glass.
G.5.2.12 Original glass

2. Using a cleaning pad dampened with alcohol, wipe the mirrors [1].




### 1.3.11 Lens

1. Remove the original glass.
G.5.2.12 Original glass

2. Using a cleaning pad dampened with alcohol, wipe the lens [1] clean of dirt.

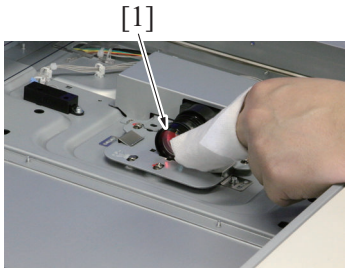


### 1.3.12 CCD sensor

1. Remove the original glass.
G.5.2.12 Original glass

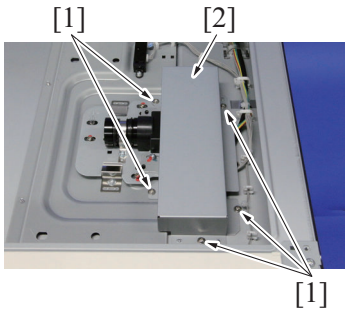


2. Remove five screws [1], and remove the CCD board protective shield [2].

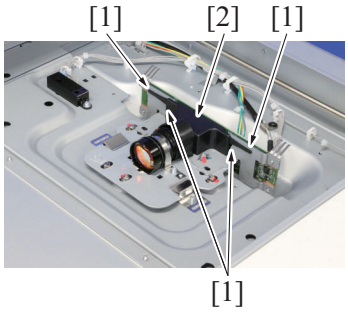


3. Unhook four tabs [1], and remove the CCD sensor cover [2].

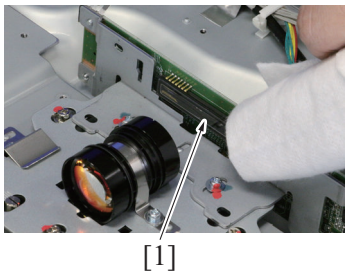


4. Using a cleaning pad dampened with alcohol, wipe the CCD sensor [1] clean of dirt.

# 2. Option

## 2.1 Cleaning parts list

### 2.1.1 DF-704

| No. | Section | Part name | Ref. page |
|---|---|---|---|
| 1 | Scanning section | Back side scanning glass | H.2.2.1 Back side scanning glass |
| | | Back side scanning guide | H.2.2.2 Back side scanning guide/Back side scanning shading shaft |
| | | Back side scanning shading shaft | |

### 2.1.2 PC-110/PC-210

| No. | Section | Part name | Ref. page |
|---|---|---|---|
| 1 | Feed section | Tray 3 feed roller | H.2.3.1 Tray 3 feed roller, tray 3 pick-up roller, tray 3 separation roller |
| 2 | | Tray 3 pick-up roller | |
| 3 | | Tray 3 separation roller | |
| 4 | | Tray 4 feed roller | H.2.3.2 Tray 4 feed roller, tray 4 pick-up roller, tray 4 separation roller |
| 5 | | Tray 4 pick-up roller | |
| 6 | | Tray 4 separation roller | |
| 7 | Transport section | Tray 3 vertical transport roller | H.2.3.3 Tray 3 vertical transport roller, tray 4 vertical transport roller |
| 8 | | Tray 4 vertical transport roller | |

### 2.1.3 PC-410

| No. | Section | Part name | Ref. page |
|---|---|---|---|
| 1 | Feed section | Feed roller | H.2.4.1 Feed roller, Pick-up roller, Separation roller |
| 2 | | Pick-up roller | |
| 3 | | Separation roller | |
| 4 | Transport section | Vertical transport roller | H.2.4.2 Vertical transport roller |

### 2.1.4 LU-302

| No. | Section | Part name | Ref. page |
|---|---|---|---|
| 1 | Paper feed section | Pick-up roller | H.2.5.1 Pick-up roller |
| 2 | | Feed roller | H.2.5.2 Feed roller |
| 3 | | Separation roller | H.2.5.3 Separation roller |
| 4 | Conveyance section | Conveyance roller | H.2.5.4 Duplex transport roller |

## 2.2 Cleaning procedure (DF-704)

### 2.2.1 Back side scanning glass

1. Open the dual scan document feeder.

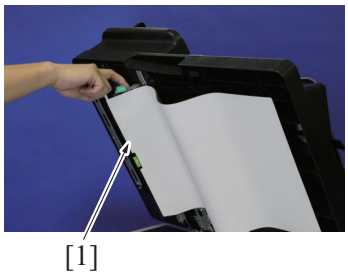


2. Open the opening and closing guide [1].

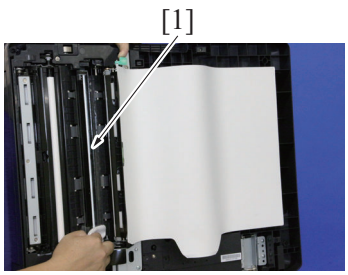


3. Using a cleaning pad, wipe the back side scanning glass [1].

### 2.2.2 Back side scanning guide/Back side scanning shading shaft

1. Open the dual scan document feeder.

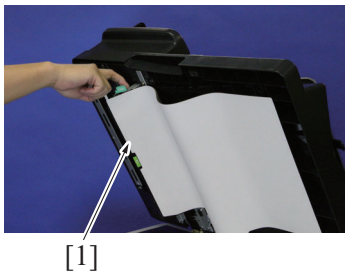


2. Open the opening and closing guide [1].

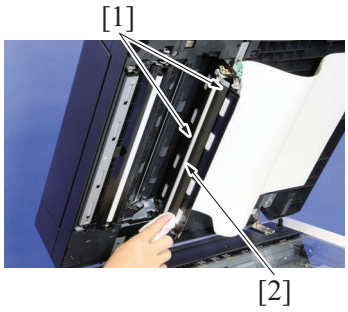


3. Using a cleaning pad with alcohol, wipe the back side scanning guide [1] and back side scanning shading shaft [2] clean of dirt.

## 2.3 Cleaning procedure (PC-110/PC-210)

**NOTE**

- **The alcohol described in the cleaning procedure of maintenance represents the isopropyl alcohol.**

### 2.3.1 Tray 3 feed roller, tray 3 pick-up roller, tray 3 separation roller

1. Remove the tray 3.
   G.6.4.4 Tray 3, tray 4 (PC-110/PC-210)
2. Remove the tray 4.
   G.6.4.4 Tray 3, tray 4 (PC-110/PC-210)

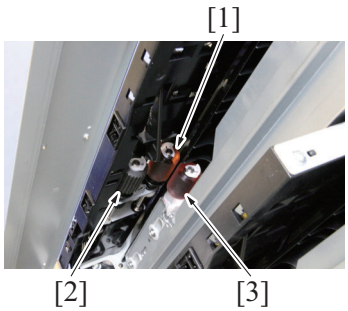


3. Using a cleaning pad dampened with alcohol, wipe the tray 3 feed roller [1], tray 3 pick-up roller [2], tray 3 separation roller [3] clean of dirt.

### 2.3.2 Tray 4 feed roller, tray 4 pick-up roller, tray 4 separation roller

1. Remove the tray 3.
   G.6.4.4 Tray 3, tray 4 (PC-110/PC-210)
2. Remove the tray 4.
   G.6.4.4 Tray 3, tray 4 (PC-110/PC-210)

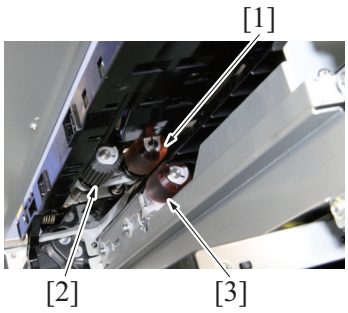


3. Using a cleaning pad dampened with alcohol, wipe the tray 4 feed roller [1], tray 4 pick-up roller [2], tray 4 separation roller [3] clean of dirt.

### 2.3.3 Tray 3 vertical transport roller, tray 4 vertical transport roller

1. Open the right door.

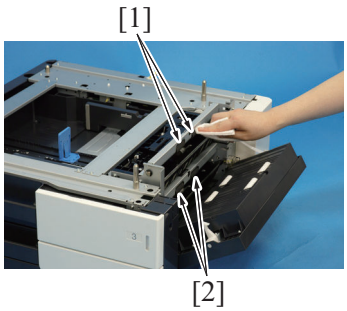


2. Using a cleaning pad dampened with alcohol, wipe the tray 3 vertical transport roller [1], tray 4 vertical transport roller [2] clean of dirt.

## 2.4 Cleaning procedure (PC-410)

**NOTE**

- **The alcohol described in the cleaning procedure of maintenance represents the isopropyl alcohol.**

### 2.4.1 Feed roller, Pick-up roller, Separation roller

1. Slide out the tray.
2. Open the right door.

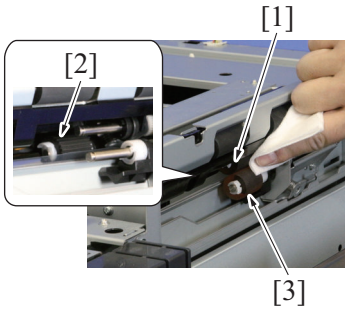


3. Using a cleaning pad dampened with alcohol, wipe the feed roller [1], pick-up roller [2], separation roller [3] clean of dirt.

### 2.4.2 Vertical transport roller

1. Open the right door.

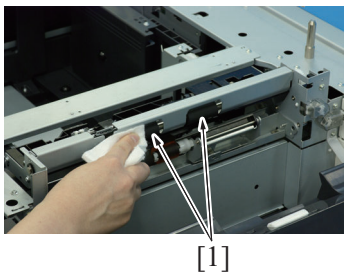


2. Using a cleaning pad dampened with alcohol, wipe the vertical transport roller [1] clean of dirt.

## 2.5 Cleaning procedure (LU-302)

**NOTE**

- **The alcohol described in the cleaning procedure of maintenance represents the isopropyl alcohol.**

### 2.5.1 Pick-up roller

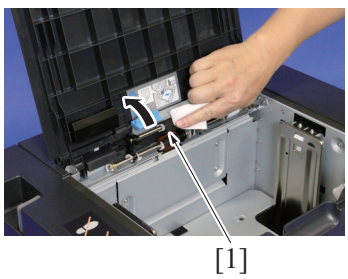


1. Open the upper door.
2. Move the feed roller assy up.

3. Using a cleaning pad dampened with alcohol, wipe the pick-up roller [1] clean of dirt.

### 2.5.2 Feed roller

1. Open the upper door.
2. Move the feed roller assy up.




3. Using a cleaning pad dampened with alcohol, wipe the feed roller [1] clean of dirt.

### 2.5.3 Separation roller

1. Open the upper door.
2. Move the feed roller assy up.

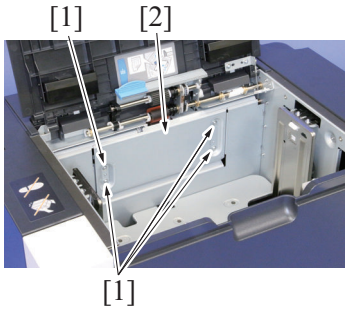


3. Remove four screws [1], and remove the plate [2].

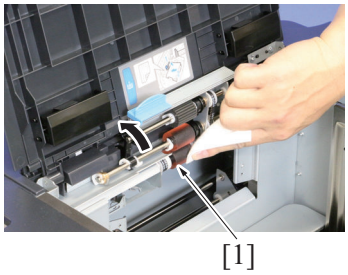


4. Using a cleaning pad dampened with alcohol, wipe the separation roller [1] clean of dirt.

### 2.5.4 Duplex transport roller

1. Remove the paper feed cover.
   G.6.6.6 Feed cover (LU-302)

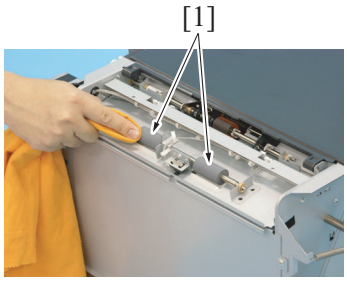


2. Using a cleaning pad dampened with alcohol, wipe the duplex transport roller [1] clean of dirt.

# I ADJUSTMENT/SETTING

## 1. How To Use The Adjustment/Setting Section

### 1.1 How to use the adjustment/setting section

- “Adjustment/Setting” contains detailed information on the adjustment items and procedures for this machine.

### 1.2 Advance checks

Before attempting to work adjustments and settings, the following advance checks must be made. Check to see if:

- The power supply voltage meets the specifications.
- The power supply is properly grounded.
- The machine shares the power supply with any other machine that draws large current intermittently. (e.g., elevator and air conditioner that generate electric noise)
- The installation site is environmentally appropriate:
  - High temperature, high humidity, direct sunlight, ventilation, etc.
  - Levelness of the installation site

  NOTICE
  - A.3.3.2 Installation Requirements

- The original has a problem that may cause a defective image.
- The density is properly selected.
- The original glass, document reading glass, or related part is dirty.
- Correct paper is being used for printing.
- The units, parts, and supplies used for printing (developer, PC drum, etc.) are properly replenished and replaced when they reach the end of their useful service life.
- Toner is not running out.

## ⚠WARNING

- To unplug the power cord of the machine before starting the service job procedures.
- If it is unavoidably necessary to service the machine with its power turned ON, use utmost care not to be caught in the scanner cables or gears of the exposure unit.
- Special care should be used when handling the fusing unit which can be extremely hot.

## ⚠CAUTION

- The developing unit has a strong magnetic field. Keep watches and measuring instruments away from it.
- Take care not to damage the PC drum with a tool or similar device.
- Do not touch IC pins with bare hands.

# 2. List of utility mode

## List of utility mode (outline)

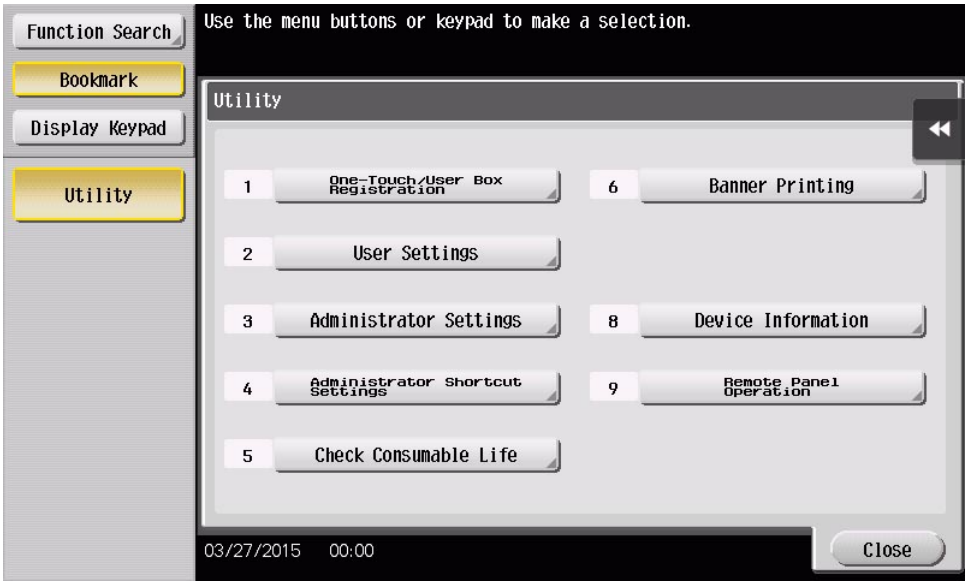


**NOTE**

- **Keys displayed on screens are different depending on the setting.**
- **For details of the utility functions, refer to "User's Guide."**
- One-Touch/User Box Registration
  - Create One-Touch Destination
  - Create User Box
  - Limiting Access to Destinations
- User Settings
  - System Settings
  - Custom Display Settings
  - Copier Settings
  - Scan/Fax Settings
  - Fax Settings
  - Printer Settings
  - Change Password
  - Change E-Mail Address
  - Register Authentication Information
  - Synchronize User Auth. and Account Track
- Administrator Settings [1/2]
  - System Settings
  - Administrator/Machine Settings
  - One-Touch/User Box Registration
  - User Authentication/Account Track
  - Network Settings
  - Copier Settings
  - Printer Settings
  - Fax Settings
  - System Connection
- Administrator Settings [2/2]
  - Security Settings
  - License Settings
  - Voice Guidance Settings
  - OpenAPI Certification Management Setting
  - External Memory Backup
  - Remote Access Setting
  - Eco Copier Settings
- Administrator Shortcut Settings
  - Register/Edit Shortcut
- Check Consumable Life
  - Print List
- Banner Printing
- My Panel Settings
- Device Information
- Remote Panel Operation

### (1) Starting procedure

1. Touch Menu.
2. Touch [Utility].
3. The Utility Mode screen will appear.

### (2) Exiting procedure

1. Touch the [Close] key.

## 2.1 One-Touch/User Box Registration

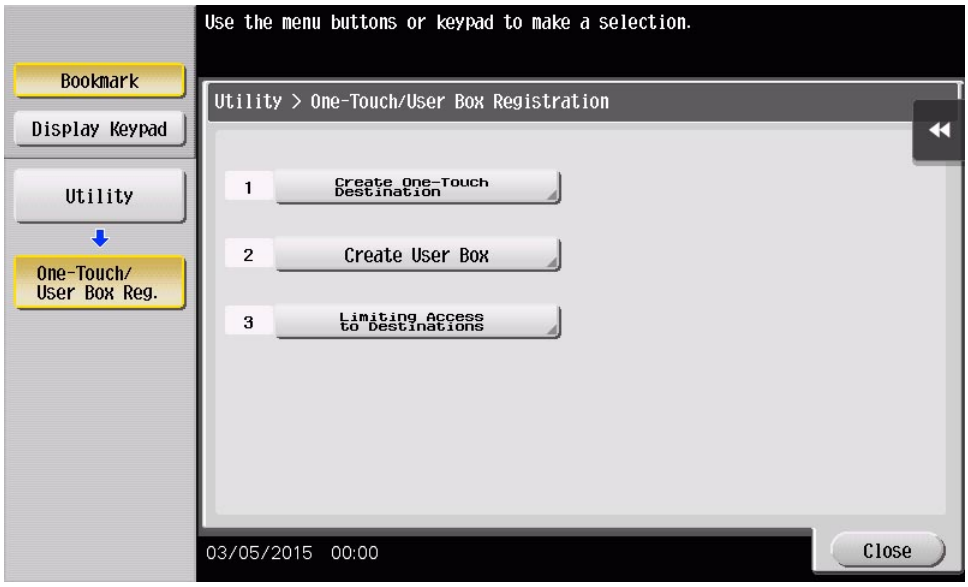


**NOTE**

- **Keys displayed on screens are different depending on the setting.**
- **For details of the utility functions, refer to "User's Guide."**
- **In a machine where the user authentication function that uses an external server or MFP is set to ON, when you operate the machine without performing user authentication, this menu is not displayed.**
- **It will not be displayed when [Service Mode] -> [Billing Setting] shows that the authentication device 2 is mounted.**

| Key name | Function/Precondition | | |
|---|---|---|---|
| Create One-Touch Destination | Address Book (Public)/ (Personal) | E-Mail | - |
| | | User Box | • It will not be displayed when [Service Mode] -> [Billing Setting] shows that the authentication device 2 is mounted.<br>• It will not be displayed when [Service Mode] -> [Billing Setting] -> [Management Function Choice] shows that the vendor 2 is mounted. (It will be displayed when the key counter is mounted.) |
| | | Fax | - |
| | | PC (SMB) | - |
| | | FTP | - |
| | | WebDAV | - |
| | | IP Address Fax | Setting will be available when [IP Address Fax Function] is set to “ON” in [Administrator Settings] -> [Network Settings] -> [Network Fax Settings] -> [Network Fax Function Settings]. |
| | | Internet Fax | Setting will be available when [Internet Fax Function] is set to “ON” in [Administrator Settings] -> [Network Settings] -> [Network Fax Settings] -> [Network Fax Function Settings]. |
| | Group | | - |
| | E-Mail Settings | E-Mail Subject | It will not be displayed when [Service Mode] -> [Billing Setting] -> [Management Function Choice] shows that the management device 2 is mounted. |
| | | E-mail Body | |
| Create User Box | Public/Personal User Box | | • It will not be displayed when [Service Mode] -> [Billing Setting] -> [Management Function Choice] shows that the vendor 2 is mounted. (It will be displayed when the key counter is mounted.)<br>• It will not be displayed due to functional restriction upon user authentication when [User Box] is set to “Restrict.”<br>• It will not be displayed when [Administrator Settings] -> [System Settings] -> [User Box Settings] -> [Allow/ Restrict User Box] is set to “Prohibit.” |

| Key name | Function/Precondition | | |
|---|---|---|---|
| | Bulletin Board User Box | | • It will be displayed when the optional fax kit FK-514 is mounted.<br>• It will not be displayed when [Service Mode] -> [Billing Setting] -> [Management Function Choice] shows that the vendor 2 is mounted. (It will be displayed when the key counter is mounted.)<br>• It will not be displayed due to functional restriction upon user authentication when [User Box] is set to "Restrict."<br>• It will not be displayed when [Administrator Settings] -> [System Settings] -> [User Box Settings] -> [Allow/Restrict User Box] is set to "Prohibit."<br>• It will not be displayed due to functional restriction upon user authentication when [Fax] is set to "Restrict." |
| | Relay User Box | | • It will be displayed when the optional fax kit FK-514 is mounted.<br>• It will be displayed when [Service Mode] -> [FAX] -> [System] -> [Display Setting] -> [Relay] is set to "ON."<br>• It will not be displayed when [Service Mode] -> [Billing Setting] -> [Management Function Choice] shows that the vendor 2 is mounted. (It will be displayed when the key counter is mounted.)<br>• It will not be displayed due to functional restriction upon user authentication when [User Box] is set to "Restrict."<br>• It will not be displayed when [Administrator Settings] -> [System Settings] -> [User Box Settings] -> [Allow/Restrict User Box] is set to "Prohibit." |
| Limiting Access to Destinations | Apply Levels/Groups to Destinations | Address Book | - |
| | | Group | - |
| | | Program | - |

## 2.2 User Settings List

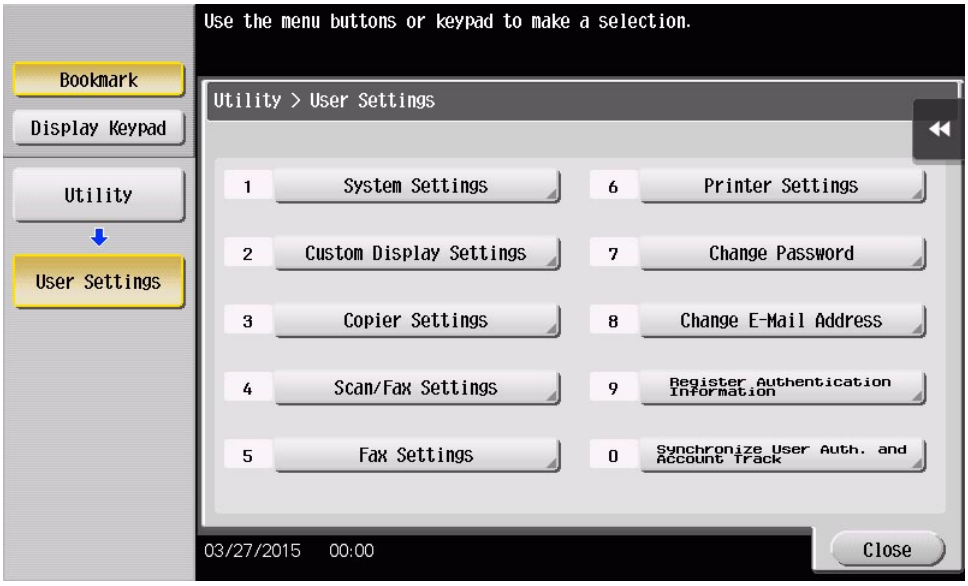


**NOTE**

- **Keys displayed on screens are different depending on the setting.**
- **For details of the utility functions, refer to "User's Guide."**
- User Settings
  - System Settings
  - Custom Display Settings
  - Copier Settings
  - Scan/Fax Settings
  - Fax Settings
  - Printer Settings
  - Change Password
  - Change E-Mail Address
  - Register Authentication Information
  - Synchronize User Auth. and Account Track

### 2.2.1 System Settings

#### (1) User Settings > System Settings [1/2]

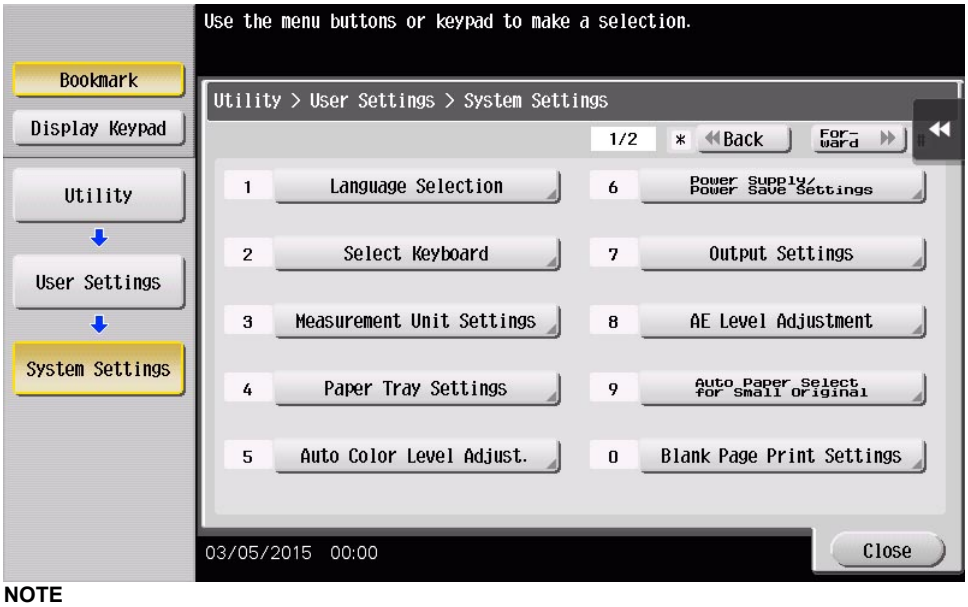


**NOTE**

- **Keys displayed on screens are different depending on the setting.**
- **For details of the utility functions, refer to "User's Guide."**

| Key name | Function/Precondition | |
|---|---|---|
| Language Selection | The language as a default depend on the marketing area selected in [Marketing Area] available from [System 1] under Service Mode. | |
| Select Keyboard | The type of keyboard to be displayed when [Local Keyboard] is selected depends on the language selected in [User Settings] -> [System Settings] -> [Language Selection]. | |
| Measurement Unit Settings | - | |
| Paper Tray Settings | Auto Tray Selection Settings | - |
| | Auto Tray Switch ON/OFF | - |
| | No Matching Paper in Tray Setting | - |
| | Print Lists | • It will not be displayed when [Service Mode] -> [Billing Setting] shows that the authentication device 2 is mounted.<br>• It will not be displayed when [Service Mode] -> [Billing Setting] -> [Management Function Choice] shows that the vendor 2 is mounted. (It will be displayed when the key counter is mounted.) |
| Auto Color Level Adjust. | - | |
| Power Supply/Power Save Settings | Low Power Mode Settings<br>Sleep Mode Settings | • It will be displayed when [Administrator Settings] -> [Security Settings] -> [Administrator Security Levels] is set to “Level 1” or “Level 2.”<br>• It will not be displayed when [Service Mode] -> [Billing Setting] -> [Management Function Choice] shows that the vendor 2 is mounted.<br>• The upper limit can be set up to 240 min. only when the switch number “157” is specified to “02” at HEX assignment by setting [Service Mode] -> [System 2] -> [Software Switch Setting]. |

| Key name | Function/Precondition | | |
|---|---|---|---|
| Output Settings | Print/Fax Output Settings | Print | • It will be displayed when [Administrator Settings] -> [Security Settings] -> [Administrator Security Levels] is set to “Level 1” or “Level 2.”<br>• It will not be displayed when [Service Mode] -> [Billing Setting] -> [Management Function Choice] shows that the vendor 2 is mounted. |
| | | Fax | • It will be displayed when the optional fax kit FK-514 is mounted.<br>• It will be displayed when [Administrator Settings] -> [Security Settings] -> [Administrator Security Levels] is set to “Level 1” or “Level 2.”<br>• It will not be displayed when [Service Mode] -> [Billing Setting] -> [Management Function Choice] shows that the vendor 2 is mounted. |
| | Output Tray Settings | | • It will be displayed when the optional finisher FS-534/FS-534SD is mounted.<br>• It will be displayed when [Administrator Settings] -> [Security Settings] -> [Administrator Security Levels] is set to “Level 1” or “Level 2.”<br>• It will not be displayed when [Service Mode] -> [Billing Setting] -> [Management Function Choice] shows that the vendor 2 is mounted. |
| AE Level Adjustment | • It will be displayed when [Administrator Settings] -> [Security Settings] -> [Administrator Security Levels] is set to “Level 2.”<br>• It will not be displayed when [Service Mode] -> [Billing Setting] -> [Management Function Choice] shows that the vendor 2 is mounted. | | |
| Auto Paper Select for Small Original | - | | |
| Blank Page Print Settings | • It will be displayed when [Administrator Settings] -> [Security Settings] -> [Administrator Security Levels] is set to “Level 2.”<br>• It will not be displayed when [Service Mode] -> [Billing Setting] -> [Management Function Choice] shows that the vendor 2 is mounted. | | |

### (2) User Settings > System Settings [2/2]

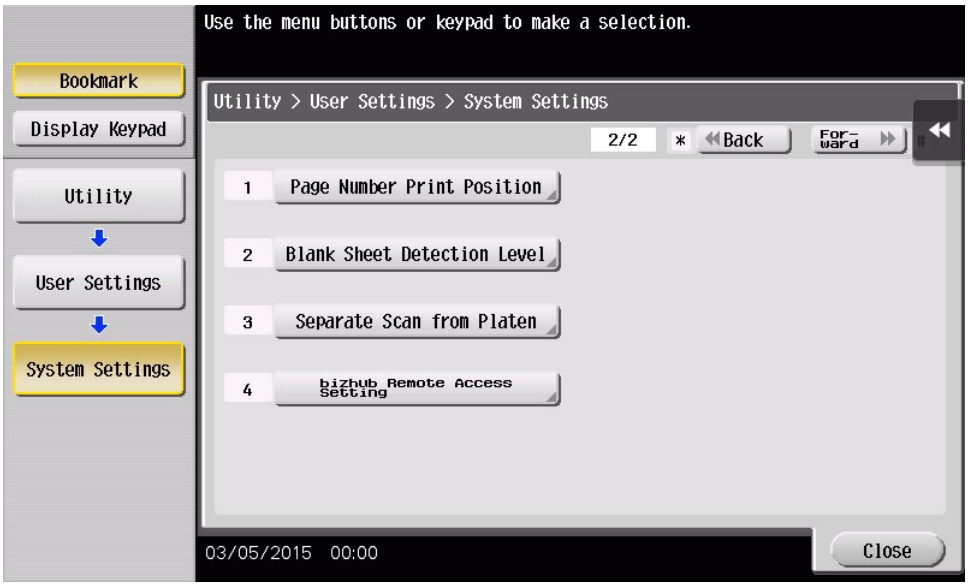


**NOTE**

- **Keys displayed on screens are different depending on the setting.**
- **For details of the utility functions, refer to "User's Guide."**

| Key name | Function/Precondition |
|---|---|
| Page Number Print Position | It will be displayed when [Administrator Settings] -> [Security Settings] -> [Administrator Security Levels] is set to “Level 2.” |
| Blank Sheet Detection Level | - |
| Separate Scan from Platen | - |
| bizhub Remote Access Setting | This is displayed when an Android tablet terminal is connected. |

### 2.2.2 Custom Display Settings

#### (1) User Settings > Custom Display Settings [1/2]

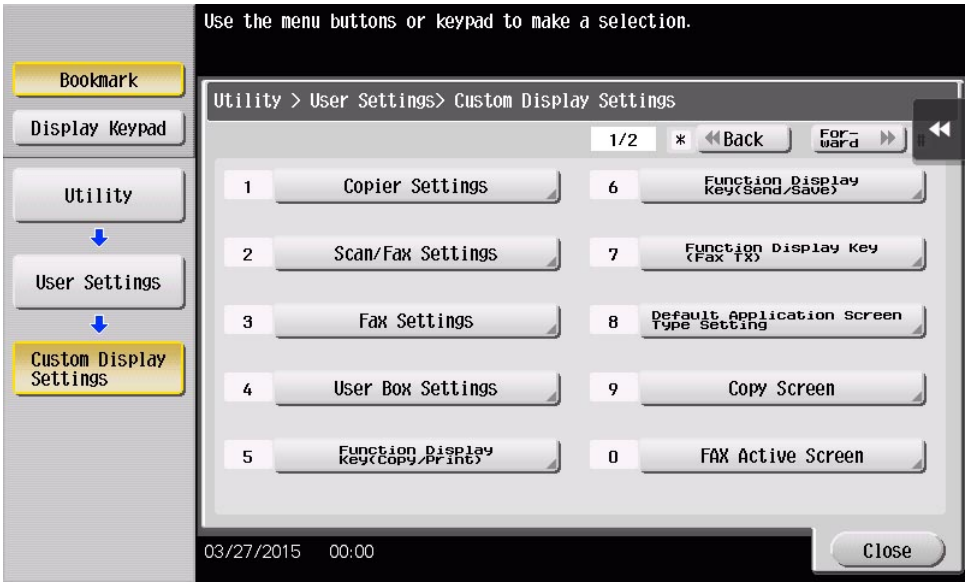


**NOTE**

- **Keys displayed on screens are different depending on the setting.**
- **For details of the utility functions, refer to "User's Guide."**

| Key name | Function/Precondition | |
|---|---|---|
| Copier Settings | Default Tab | - |
| | Quick Settings 1 | When this setting is set to ON, select the copy functions you wish to register. |
| | Quick Settings 2 | |
| | Default Paper Type Display | This displays when a custom paper is registered. |
| Scan/Fax Settings | Default Tab | - |
| | Program Default | - |
| | Address Book Index Default | - |
| | Default Address Sort Method | - |
| | Default Address Display Method | - |
| Fax Settings | Default Tab | - |
| | Program Default | - |
| | Address Book Index Default | - |
| | Default Address Sort Method | - |
| | Default Address Display Method | - |
| User Box Settings | Default Tab | - |
| | Shortcut Key 1 | When this setting is set to ON, select auxiliary functions to get their shortcut keys displayed on the screen. |
| | Shortcut Key 2 | |
| Function Display Key (Copy/Print) | This is not displayed when [Administrator Settings] -> [System Settings] -> [Custom Display Settings] -> [Function Display Key Permission Setting] -> [Copy/Print] is set to “Restrict.” | |
| Function Display Key (Send/Save) | This is not displayed when [Administrator Settings] -> [System Settings] -> [Custom Display Settings] -> [Function Display Key Permission Setting] -> [Send/Save] is set to “Restrict.” | |
| Function Display Key (Fax TX) | | |
| Default Application Screen Type Setting | - | |
| Copy Screen | Copy Operating Screen | It will not be displayed when [Service Mode] -> [Billing Setting] -> [Management Function Choice] shows that key counter or vendor 2 is mounted. However, this menu is available when the key counter is installed and [Service Mode] -> [Billing Setting] -> [Management Function Choice] -> [The next job reservation] is set to "License." |

| Key name | Function/Precondition | |
|---|---|---|
| Fax Active Screen | TX Display<br>RX Display | • It will be displayed when the optional fax kit FK-514 is mounted.<br>• It will not be displayed when [Service Mode] -> [Billing Setting] -> [Management Function Choice] shows that key counter or vendor 2 is mounted. |

### (2) User Settings > Custom Display Settings [2/2]

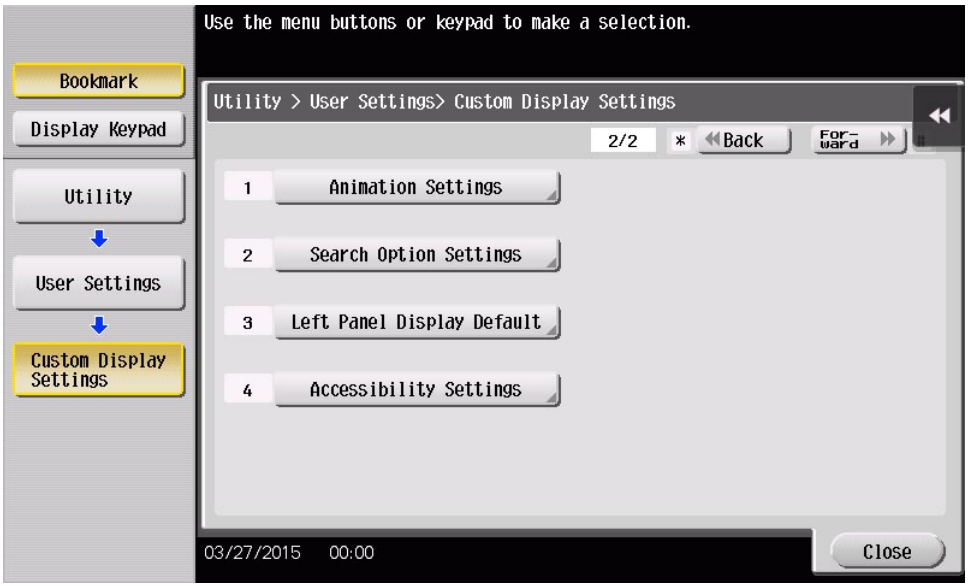


**NOTE**

- **Keys displayed on screens are different depending on the setting.**
- **For details of the utility functions, refer to "User's Guide."**

| Key name | Function/Precondition |
|---|---|
| Animation Settings | - |
| Search Option Settings | - |
| Left Panel Display Default | - |
| Accessibility Settings | - |

## 2.2.3 Copier Settings

### (1) User Settings > Copier Settings [1/4]

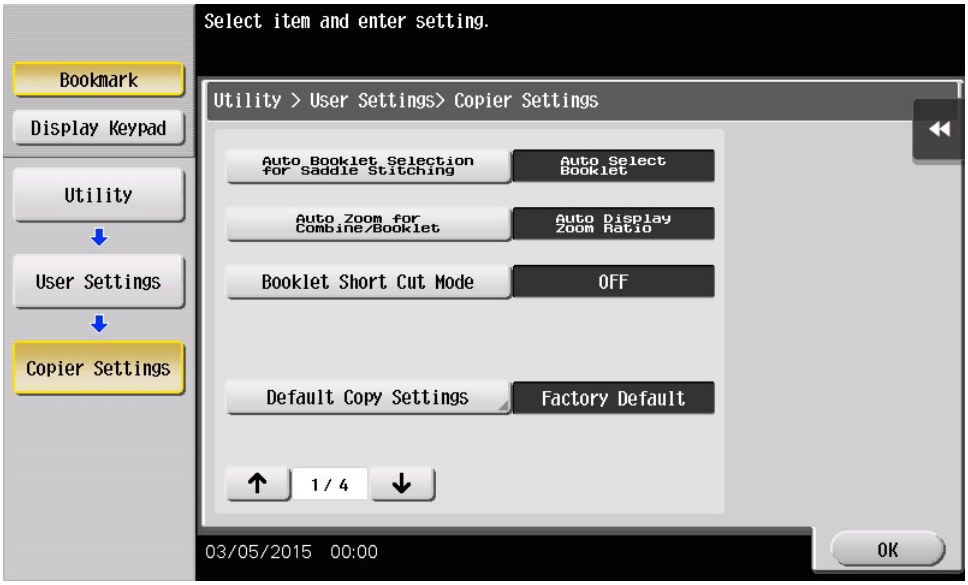


**NOTE**

- **Keys displayed on screens are different depending on the setting.**
- **For details of the utility functions, refer to "User's Guide."**

| Key name | Function/Precondition |
|---|---|
| Auto Booklet Selection for Saddle Stitching | It will be displayed when the optional finisher FS-534SD is installed. |
| Auto Zoom for Combine/ Booklet | - |
| Booklet Short Cut Mode | - |

| Key name | Function/Precondition |
|---|---|
| Default Copy Settings | • This menu is unavailable if user authentication is not made while either of authentication device 2 is set to Set in the [Service Mode] -> [Billing Setting].<br>• This menu is not available when the key counter is set or when a warning appears to inform that the vendor's main power switch needs to be checked or coins (a card) are not inserted under the condition where the vendor 2 is set to Set in the [Service Mode] -> [Billing Setting] -> [Management Function Choice]. |

### (2) User Settings > Copier Settings [2/4]

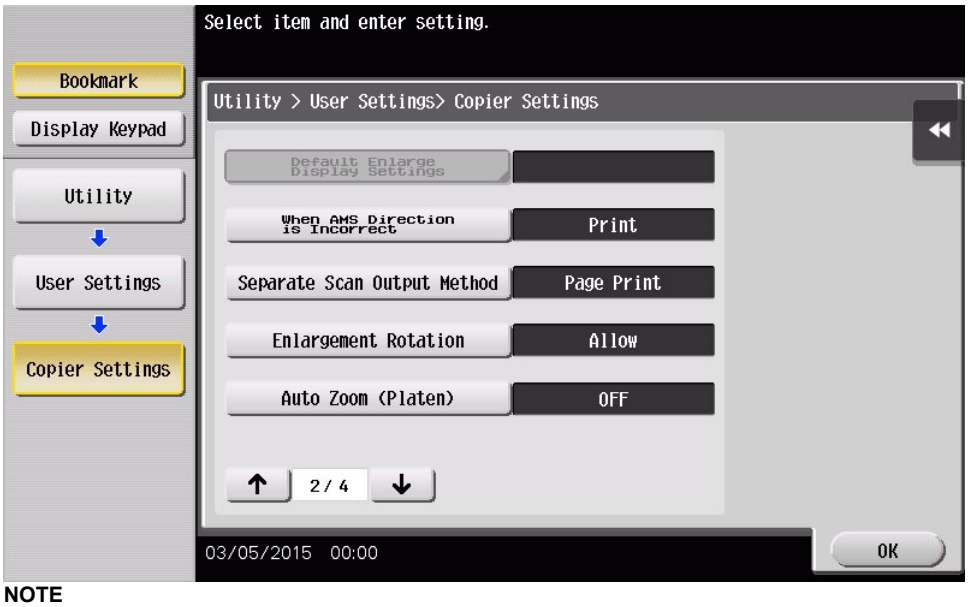


**NOTE**

- **Keys displayed on screens are different depending on the setting.**
- **For details of the utility functions, refer to "User's Guide."**

| Key name | Function/Precondition |
|---|---|
| Default Enlarge Display Settings | Displayed when you select [Utility] -> [User Settings] -> [Copier Settings] in the enlarge display mode. |
| When AMS Direction is Incorrect | - |
| Separate Scan Output Method | - |
| Enlargement Rotation | - |
| Auto Zoom (Platen) | It will be displayed when [Administrator Settings] -> [Security Settings] -> [Administrator Security Levels] is set to “Level 1” or “Level 2.” |

### (3) User Settings > Copier Settings [3/4]

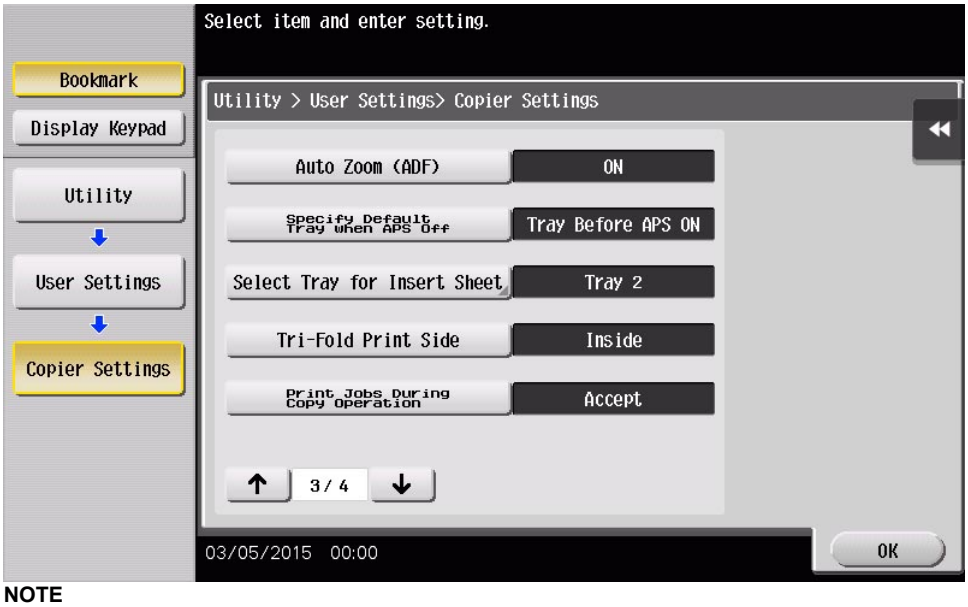


**NOTE**

- **Keys displayed on screens are different depending on the setting.**
- **For details of the utility functions, refer to "User's Guide."**

| Key name | Function/Precondition |
|---|---|
| Auto Zoom (ADF) | It will be displayed when [Administrator Settings] -> [Security Settings] -> [Administrator Security Levels] is set to “Level 1” or “Level 2.” |
| Specify Default Tray when APS Off | |
| Select Tray for Insert Sheet | - |
| Tri-Fold Print Side | • It will be displayed when the optional finisher FS-534SD is installed.<br>• It will be displayed when [Administrator Settings] -> [Security Settings] -> [Administrator Security Levels] is set to “Level 1” or “Level 2.” |
| Print Jobs During Copy Operation | It will be displayed when [Administrator Settings] -> [Security Settings] -> [Administrator Security Levels] is set to “Level 2.” |

### (4) User Settings > Copier Settings [4/4]

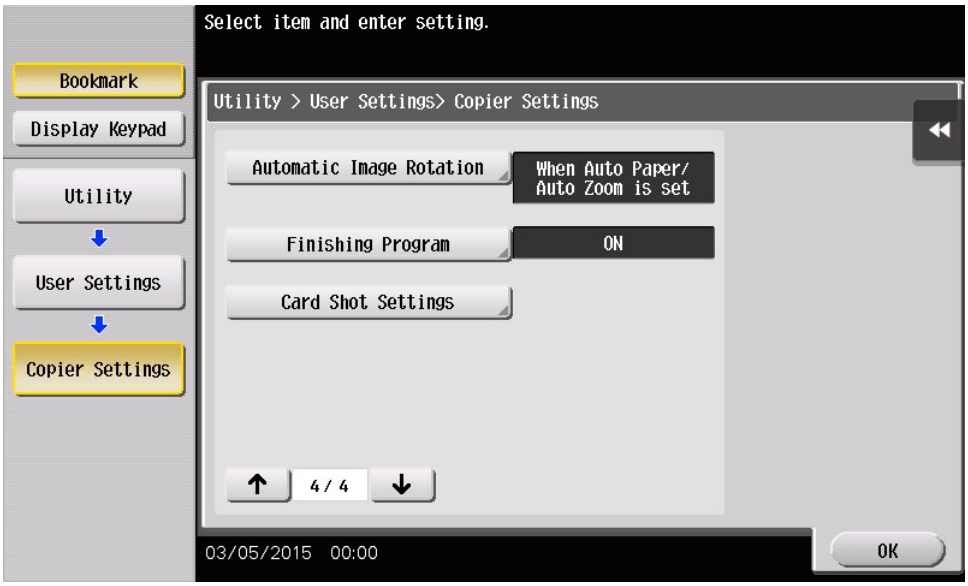


**NOTE**

- **Keys displayed on screens are different depending on the setting.**
- **For details of the utility functions, refer to "User's Guide."**

| Key name | Function/Precondition | |
|---|---|---|
| Automatic Image Rotation | It will be displayed when [Administrator Settings] -> [Security Settings] -> [Administrator Security Levels] is set to “Level 1” or “Level 2.” | |
| Finishing Program | • It will be displayed when the optional finisher FS-533/FS-534/FS-534SD is mounted.<br>• When selecting “ON,” select the contents to be registered in the finishing program. | |
| Card Shot Settings | Layout | - |
| | Zoom | - |
| | Store Original Size | - |

### 2.2.4 Scan/Fax Settings

#### (1) User Settings > Scan/Fax Settings [1/3]




**NOTE**

- **Keys displayed on screens are different depending on the setting.**
- **For details of the utility functions, refer to "User's Guide."**

| Key name | Function/Precondition |
|---|---|
| JPEG Compression Level | - |
| Black Compression Level | - |
| TWAIN Lock Time | - |
| Default Scan/Fax Settings | • This menu is unavailable if user authentication is not made while either of authentication device 2 is set to Set in the [Service Mode] -> [Billing Setting].<br>• This menu is not available when the key counter is set or when a warning appears to inform that the vendor's main power switch needs to be checked or coins (a card) are not inserted under the condition where the vendor 2 is set to Set in the [Service Mode] -> [Billing Setting] -> [Management Function Choice]. |
| Default Enlarge Display Settings | Displayed when you select [Utility] -> [User Settings] -> [Scan/Fax Settings] in the enlarge display mode. |

#### (2) User Settings > Scan/Fax Settings [2/3]

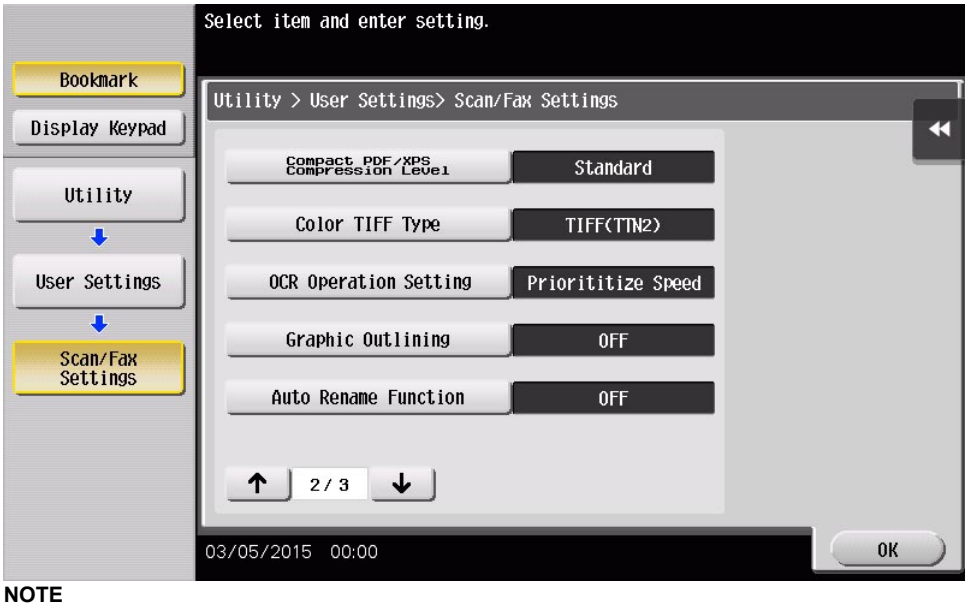


**NOTE**

- **Keys displayed on screens are different depending on the setting.**
- **For details of the utility functions, refer to "User's Guide."**

| Key name | Function/Precondition |
|---|---|
| Compact PDF/XPS Compression Level | - |
| Color TIFF Type | - |

| Key name | Function/Precondition |
|---|---|
| OCR Operation Setting | • This is displayed when the optional i-Option LK-105 v4 and upgrade kit UK-211 are enabled.<br>• To specify the file type to DOCX or XLSX, the optional i-Option LK-110 v2 and upgrade kit UK-211 are required. |
| Graphic Outlining | - |
| Auto Rename Function | - |

### (3) User Settings > Scan/Fax Settings [3/3]

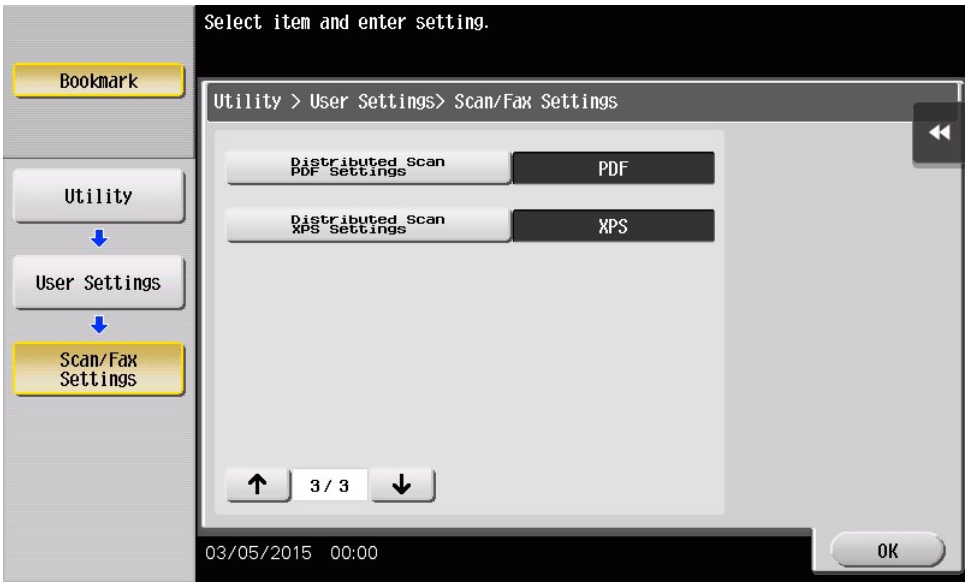


**NOTE**

- **Keys displayed on screens are different depending on the setting.**
- **For details of the utility functions, refer to "User's Guide."**

| Key name | Function/Precondition |
|---|---|
| Distributed Scan PDF Settings | This displays when the following conditions are satisfied.<br>• The authentication server type is set to Active Directory.<br>• [Distributed Scan Settings] is set to [Use] in [Administrator Settings] -> [Network Settings].<br>• User allows scan operation. |
| Distributed Scan XPS Settings | |

## 2.2.5 Fax Settings

### User Settings > Fax Settings




**NOTE**

- **Keys displayed on screens are different depending on the setting.**
- **For details of the utility functions, refer to "User's Guide."**

| Key name | Function/Precondition |
|---|---|
| Fax Default Settings | • This menu is unavailable if user authentication is not made while either of authentication device 2 is set to Set in the [Service Mode] -> [Billing Setting].<br>• This menu is not available when the key counter is set or when a warning appears to inform that the vendor's main power switch needs to be checked or coins (a card) are not inserted under the condition where the vendor 2 is set to Set in the [Service Mode] -> [Billing Setting] -> [Management Function Choice]. |

### 2.2.6 Printer Settings

**User Settings > Printer Settings**

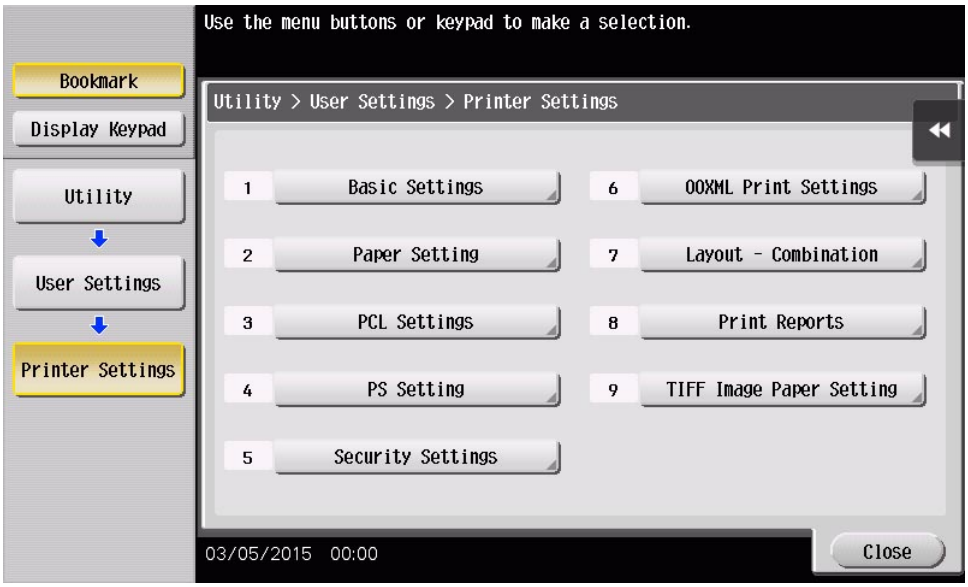


**NOTE**

- **Keys displayed on screens are different depending on the setting.**
- **For details of the utility functions, refer to "User's Guide."**

| Key name | Function/Precondition | |
|---|---|---|
| Basic Settings | PDL Setting | - |
| | Color Setting | - |
| | Edge Enhancement | - |
| | Number of Copies | - |
| | Original Direction | - |
| | Gloss Mode | - |
| | Toner Save | - |
| | Fold Type Settings | It will be displayed when the optional finisher FS-534SD is installed. |
| | Half-Fold/Tri-Fold Specification Settings | |
| | Binding Direction Adjustment | - |
| | Spool Print Jobs in HDD before RIP | - |
| | A4/A3 <--> LTR/LGR Auto Switch | - |
| | Banner Sheet Setting | - |
| | Line Width Adjustment (600dpi) | - |
| | Line Width Adjustment (1200dpi) | - |
| | Gray Background Text Correction | - |
| | Gray Background Text Correction (Fiery) | - |
| | Minimal Print | - |
| | OOXML Print Mode | - |
| Paper Setting | Paper Tray | - |
| | Paper size | - |
| | Paper Type | - |
| | 2-Sided Print | - |
| | Binding Position | - |

| Key name | Function/Precondition | | |
|---|---|---|---|
| | Staple | It will be displayed when the optional finisher FS-533/FS-534/FS-534SD is mounted. | |
| | Punch | • It will be displayed when the optional punch kit PK-519 is installed in the finisher FS-533.<br>• It will be displayed when the optional punch kit PK-520 is installed in the finisher FS-534/FS-534SD.<br>• The number of punch holes being set is available from [Service Mode] -> [Finisher]. | |
| | Banner Paper Tray | - | |
| PCL Settings | Select Color | - | |
| | Font Settings | - | |
| | Symbol Set | - | |
| | Font Size | - | |
| | Line/Page | Default setting value differs depending on the values by setting [Utility] -> [User Setting] -> [Printer Setting] -> [Basic Settings] -> [Original Direction] and setting [Utility] -> [User Setting] -> [Printer Setting] -> [Paper Setting] -> [Paper Size]. | |
| | Thin Line | - | |
| | CR/LF Mapping | - | |
| | Bar Code Font Settings | This is displayed when the optional i-Option LK-106 and upgrade kit UK-211 are enabled. | |
| PS Setting | Select Color | - | |
| | ICC Profile Settings | Photo - RGB Color | - |
| | | Photo - Output Profile | - |
| | | Text - RGB Color | - |
| | | Text - Output Profile | - |
| | | Figure/Table/Graph - RGB Color | - |
| | | Figure/Table/Graph - Output Profile | - |
| | | Simulation Profile | - |
| | Auto Trapping | - | |
| | Black Overprint | - | |
| | Print PS Errors | - | |
| Security Settings | Verify XPS/OOXML Digital Signature | - | |
| OOXML Print Settings | Print Sheet/Book | - | |
| | Paper size | The paper size selected in [Foolscap Size Setting] in service mode is displayed. | |
| | Paper Type | - | |
| Layout - Combination | - | | |
| Print Reports | Configuration Page | It will not be displayed when [Service Mode] -> [Billing Setting] -> [Management Function Choice] shows that the vendor 2 is mounted. (It will be displayed when the key counter is mounted.) | |
| | Demo Page | | |
| | PCL Font List | | |
| | PS Font List | | |
| TIFF Image Paper Setting | Paper Selection | When “Auto Paper Select” is selected and paper larger than the image size is not in the paper trays, paper size error occurs. | |

### 2.2.7 Change Password

**NOTE**

- **Keys displayed on screens are different depending on the setting.**
- **For details of the utility functions, refer to "User's Guide."**

| Key name | Function/Precondition |
|---|---|
| Change Password | • When conducting user authentication (MFP only), it will be displayed when the authentication is complete.<br>• When conducting user authentication or account track input, it will be displayed when login is authenticated as user box administrator.<br>• When [Password Rules] which can be displayed by [Utility] -> [Administrator Settings] -> [Security Settings] -> [Security Details] is set to “Enable”, password using the single letter or the password same with the previous one, less than 8-digit will not be modified.<br>• When [Administrator Settings] -> [Security Settings] -> [Enhanced Security Mode] is set to “ON”, entering the incorrect password three times will cause access lock. |

### 2.2.8 Change E-Mail Address

**NOTE**

- **Keys displayed on screens are different depending on the setting.**

- **For details of the utility functions, refer to "User's Guide."**

| Key name | Function/Precondition |
|---|---|
| Change E-Mail Address | • When conducting user authentication (MFP only), it will be displayed when the authentication is complete.<br>• It will be displayed when [Administrator Settings] -> [Security Settings] -> [Administrator Security Levels] is set to “Level 2.” |

### 2.2.9 Register Authentication Information

**NOTE**

- **Keys displayed on screens are different depending on the setting.**
- **For details of the utility functions, refer to "User's Guide."**

| Key name | Function/Precondition |
|---|---|
| Register Authentication Information | It will be displayed when user authentication (MFP) is completed and the following is met;<br>• [Biometric/IC Card Info. Registration] is set to “Allow” in [Administrator Settings] -> [System Settings] -> [Restrict User Access] -> [Restrict Access to Job Settings].<br>• [Biometric/IC Card Info. Registration] is set to “Allow” in [Administrator Settings] -> [User Authentication/ Account Track] -> [User Authentication Settings] -> [User Registration] -> [Function Permission]. |

### 2.2.10 Synchronize User Auth. and Account Track

**NOTE**

- **Keys displayed on screens are different depending on the setting.**
- **For details of the utility functions, refer to "User's Guide."**

| Key name | Function/Precondition |
|---|---|
| Synchronize User Auth. and Account Track | • When conducting user authentication (ON (MFP), External Server Authentication, or Main + External Server), it will be displayed only when the authentication is complete.<br>• It will be displayed when [Administrator Settings] -> [User Authentication/Account Track] -> [General Settings] -> [Synchronize User Authentication & Account Track] is set to “Synchronize by User.” |

## 2.3 Administrator Settings List [1/2]

### Administrator settings outline 1/2

**NOTE**

- **The Administrator Settings will be available by entering the administrator password (16 digits) set by the Administrator Settings or Service Mode. (The administrator password is initially set to “1234567812345678.”)**
- **When [Administrator Settings] -> [Security Settings] -> [Enhanced Security Mode] is set to “ON”, entering the incorrect administrator password three times will cause access lock. The access lock is released after the lapse of a predetermined period of time (Default setting: 5 min.) after the main power switch is turned OFF and then ON more than 10 seconds later. The access lock can be released by [Service Mode] -> [Enhanced Security] -> [Administrator unlocking].**
- **For details of the utility functions, refer to "User's Guide."**

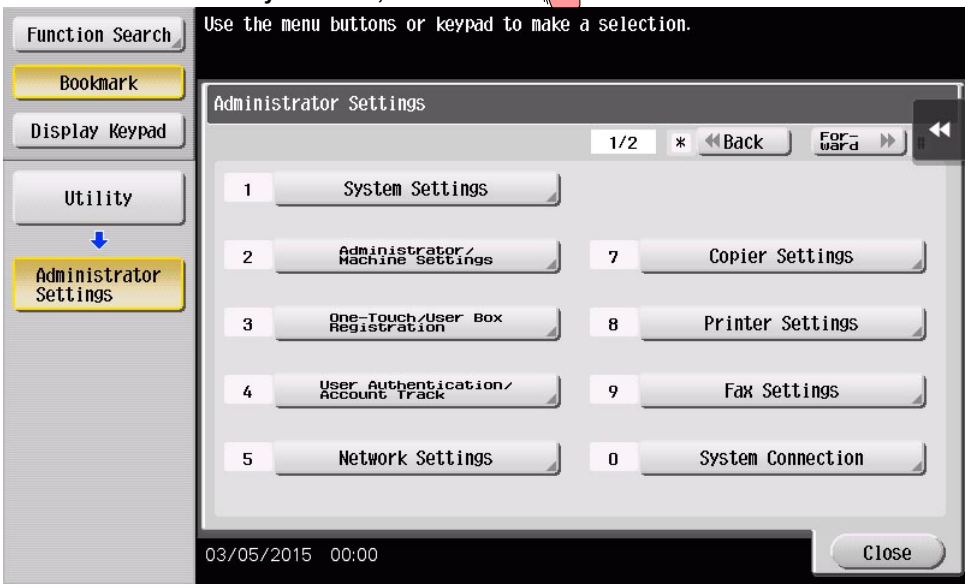


- Administrator Settings [1/2]
  - System Settings
  - Administrator/Machine Settings
  - One-Touch/User Box Registration
  - User Authentication/Account Track
  - Network Settings
  - Copier Settings
  - Printer Settings
  - Fax Settings
  - System Connection
- Administrator Settings [2/2]
  - Security Settings

- License Settings
- Voice Guidance Settings
- OpenAPI Certification Management Setting
- External Memory Backup
- Remote Access Setting
- Eco Copier Settings

### 2.3.1 System Settings

**NOTE**

- **Keys displayed on screens are different depending on the setting.**

#### (1) Administrator Settings > System Settings [1/3]

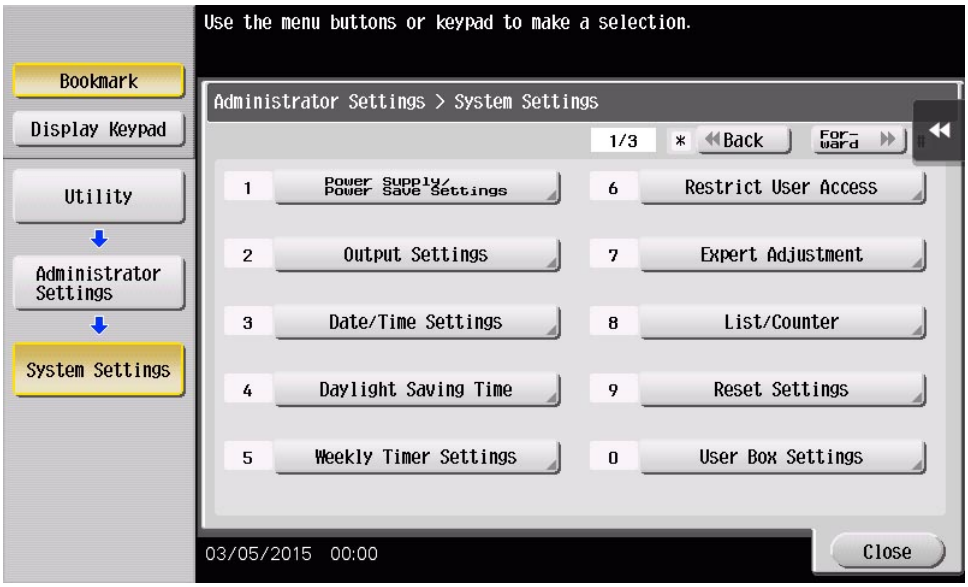


**NOTE**

- **Keys displayed on screens are different depending on the setting.**
- **For details of the utility functions, refer to "User's Guide."**

#### (a) Power Supply/Power Save Settings

| Key name | Function/Precondition |
|---|---|
| Low Power Mode Settings | The upper limit can be set up to 240 min. only when the switch number “157” is specified to “02” at HEX assignment by setting [Service Mode] -> [System 2] -> [Software Switch Setting]. |
| Sleep Mode Settings | • When [Service Mode] -> [System 1] -> [Sleep ON/OFF Choice Setting] is allowed, the setting to turn sleep on and off displays and becomes selectable.<br>• The sleep mode will begin in 48 hours even if it sets it to “OFF.”<br>• The upper limit can be set up to 240 min. only when the switch number “157” is specified to “02” at HEX assignment by setting [Service Mode] -> [System 2] -> [Software Switch Setting]. |
| Power Key Setting | In ErP auto power OFF mode, this machine cannot receive data or faxes, and also it cannot scan or print an original. |
| Power Save Settings | - |
| Enter Power Save Mode | - |
| Power Consumption in Sleep Mode | - |
| Power Saving Fax/Scan | This function is available when the option other than “Copy” is selected in [Administrator Settings] -> [System Settings] -> [Reset Settings] -> [System Auto Reset] -> [Priority Mode]. |
| Awake from Power Save Mode by Touching Control Panel | - |

#### (b) Output Settings

| Key name | Function/Precondition | |
|---|---|---|
| Print/Fax Output Settings | Print | - |
| | Fax | [Fax] will be displayed when the optional fax kit FK-514 is mounted. |
| Output Tray Settings | • It will be displayed when the optional finisher FS-534/FS-534SD is mounted.<br>• It will be displayed when the optional job separator JS-506 is mounted. | |
| Shift Output Each Job | • It will be displayed when the optional finisher FS-533/FS-534/FS-534SD is mounted.<br>• It will be displayed when the optional job separator JS-506 is mounted. | |

### (c) Date/Time Setting

| Key name | Function/Precondition |
|---|---|
| Date/Time Setting | When [Administrator Settings] -> [Network Settings] -> [Detail Settings] -> [Time Adjustment Setting] is set to "ON", [Set Date] will be displayed. Touch [Set Date] and modify the time. |

### (d) Daylight Saving Time

| Key name | Function/Precondition |
|---|---|
| Daylight Saving Time | When setting to "Yes", set the time difference to move up.<br>• Default setting: 60 min.<br>• Setting range: 1 to 150 |

### (e) Weekly Timer Settings

**NOTE**

- **It will not be displayed when [Service Mode] -> [Billing Setting] -> [Management Function Choice] shows that the vendor 2 is mounted.**

| Key name | Function/Precondition |
|---|---|
| Weekly Timer ON/OFF Settings | - |
| Time Settings | - |
| Date Settings | - |
| Select Time for Power Save | When "Yes" is selected, using the 10-key pad, input the Power Save Start Time and Power Save End Time. |
| Password for Non-Business Hours | When setting to "Yes", enter the password (eight digits). |
| Tracking Function Settings | - |
| Display ON/OFF Time | - |

### (f) Restrict User Access

| Key name | | Function/Precondition |
|---|---|---|
| Restrict Program Function Setting | - | |
| Copy Program Lock Settings | - | |
| Delete Saved Copy Program | - | |
| Restrict Access to Job Settings | Changing Job Priority | • It will not be displayed when [Service Mode] -> [Billing Setting] -> [Management Function Choice] shows that the vendor 2 is mounted.<br>• If [Administrator Settings] -> [Security Settings] -> [Enhanced Security Mode] is set to "ON", selecting "Allow" for [Registering and Changing Addresses] cancels enhanced security mode.<br>• The [Biometric/IC Card Info. Registration] key displays if authentication device 2 is mounted via [Service Mode] -> [Billing Setting], and [Administrator Settings] -> [User Authentication/Account Track] -> [General Settings] -> [User Authentication] is set to "ON (MFP)."<br>• [Synchronize User Auth. and Account Track] does not display when [Administrator Settings] -> [User Authentication/Account Track] -> [General Settings] -> [Synchronize User Authentication & Account Track] is set to "Synchronize by User." |
| | Delete Other User Jobs | |
| | Registering and Changing Addresses | |
| | Changing Zoom Ratio | |
| | Changing the "From" Address | |
| | Change Registered Overlay | |
| | Biometric/IC Card Info. Registration | |
| | Synchronize User Authentication & Account Track | |
| Restrict Operation | Restrict Broadcasting | - |

### (g) Expert Adjustment

**NOTE**

- **It will not be displayed when [Service Mode] -> [Billing Setting] -> [Management Function Choice] shows that the vendor 2 is mounted. (It will be displayed when the Key Counter is mounted when [Service Mode] -> [System 2] -> [Software Switch Setting] shows that switch No.33 is set to [00000001] at Bit assignment/[01] at HEX assignment.)**

| Key name | | Function/Precondition |
|---|---|---|
| AE Level Adjustment | - | |
| Printer Adjustment | Leading Edge Adjustment | This menu is unavailable when the key counter is not inserted while only the key counter is set to Set by [Service Mode] -> [Billing Setting] -> [Management Function Choice]. |
| | Centering | |
| | Leading Edge Adjustment (Duplex Side 2) | |

| Key name | Function/Precondition | |
|---|---|---|
| | Centering (Duplex 2nd Side) | |
| | Erase Leading Edge | It will be displayed when [Service Mode] -> [Enhanced Security] -> [Administrator Feature Level] is set to “Level 2.”<br>• The adjusted values from [Erase Leading Edge] are also updated to the service mode as the "I.5.4.12 Lead Edge Erase Adjustment" function in service mode is opened to administrators.<br>• The adjusted values from [Vertical Adjustment] are also updated to the service mode as the "I.5.4.5.(5) Paper Feed Direction Adj." function in service mode is opened to administrators. |
| | Vertical Adjustment | |
| | Media Adjustment | This function is provided to open [2nd Transfer Adj] of Service Mode up to administrator and the fine-adjusted value is reflected in the Service Mode setting. |
| Finisher Adjustment | Center Staple Position | It will be displayed when the optional finisher FS-534/FS-534SD is mounted. |
| | Half-Fold Position | It will be displayed when the optional finisher FS-534SD is installed. |
| | 1st Tri-Fold Position Adjustment | |
| | 2nd Tri-Fold Position Adjustment | |
| | Punch Horizontal Position Adjustment | It will be displayed when the optional punch kit PK-520 is installed in the finisher FS-534/FS-534SD. |
| | Paper Alignment Plate Settings | It will be displayed when the optional finisher FS-533 is installed. |
| | Punch Regist Loop Size Adjustment | • It will be displayed when the optional punch kit PK-519 is installed in the finisher FS-533.<br>• It will be displayed when the optional punch kit PK-520 is installed in the finisher FS-534/FS-534SD. |
| Density Adjustment | Thick - Yellow | - |
| | Thick - Magenta | - |
| | Thick - Cyan | - |
| | Thick - Black | - |
| | Black Image Density | - |
| Image Stabilization | Image Stabilization Only | - |
| | Image Stabilization Setting | - |
| Paper Separation Adjustment | - | |
| Color Registration Adjustment | Color Registration Adjust (Yellow) | This menu is unavailable when the key counter is not inserted while only the key counter is set to Set by [Service Mode] -> [Billing Setting] -> [Management Function Choice]. |
| | Color Registration Adjust (Magenta) | |
| | Color Registration Adjust (Cyan) | |
| Gradation Adjustment | Image Stabilization Only | • This menu is unavailable when the key counter is not inserted while only the key counter is set to Set by [Service Mode] -> [Billing Setting] -> [Management Function Choice].<br>• Before executing Gradation adjust, be sure to perform Stabilizer. |
| | Printer (600dpi) | |
| | Printer (1200dpi) | |
| | Copy | |
| Scanner Area | Scanner Adjustment: Leading Edge | • It will be displayed when [Service Mode] -> [Enhanced Security] -> [Administrator Feature Level] is set to “Level 2.”<br>• This menu is unavailable when the key counter is not inserted while only the key counter is set to Set by [Service Mode] -> [Billing Setting] -> [Management Function Choice].<br>• The adjusted values from [Scan Area] are also updated to the service mode as the "I.5.4.6 Scan Area" function in service mode is opened to administrators. |
| | Scanner Adjustment: Centering | |
| | Horizontal Adjustment | |
| | Vertical Adjustment | |
| ADF Adjustment | Centering | It will be displayed when [Service Mode] -> [Enhanced Security] -> [Administrator Feature Level] is set to “Level 2.” |
| | Original Stop Position | |
| | Centering Auto Adjustment | • It will be displayed when [Service Mode] -> [Enhanced Security] -> [Administrator Feature Level] is set to “Level 2.”<br>• When the adjustment result is [Unable], confirm the orientation of the original document and manually adjust the [Original Stop Position]. |
| | Auto Adj. of Stop Position | |
| Line Detection | Prior Detection Setting | Be aware that selecting “No” and performing the pre-detection with [Service Mode] -> [Machine] -> [ADF Scan Glass Contamination] will display “NG.” |
| | Feed Cleaning Settings | - |
| Trail Edge Adjust | - | |
| User Paper Settings | • It will be displayed when [Service Mode] -> [Enhanced Security] -> [Administrator Feature Level] is set to “Level 2.” | |

| Key name | Function/Precondition | |
|---|---|---|
| | • The feature available from [Service Mode] -> [System 2] -> [User Paper Settings] is extended to Administrator. However, the fusing temperature setting is not possible in Administrator Settings. | |
| Erase Adjustment | Non-Image Area Erase Operation Settings | - |
| PS Designer Settings | - | |

### (h) List/Counter

| Key name | Function/Precondition | |
|---|---|---|
| Management List | Job Settings List | It will not be displayed when [Service Mode] -> [Billing Setting] -> [Management Function Choice] shows that the vendor 2 is mounted. (It will be displayed when the Key Counter is mounted when [Service Mode] -> [System 2] -> [Software Switch Setting] shows that switch No.33 is set to [00000001] at Bit assignment/ [01] at HEX assignment.) |
| Paper Size/Type Counter | - | |
| Meter Counter List | Setting will be available when [Service Mode] -> [Billing Setting] -> [Management Function Choice] shows that management device 2 or vendor 2 is mounted. | |
| Check Consumables List | | |
| Transmission Meter Count and Device Information | • The counter information is collected via CS Remote Care.<br>• Though this setting is set to [Allow], the information is not sent if [Service Mode] -> [System 2] -> [Acquiring Settings] is set to “OFF.” | |
| TX Operation Log Output | This is displayed when [Administrator Settings] -> [Security Settings] -> [Security Details] -> [TX Operation Log] is set to “Save.” | |

### (i) Reset Settings

| Key name | Function/Precondition | | |
|---|---|---|---|
| System Auto Reset | • The screen saver function displays when the screen saver application is registered.<br>• The screen saver function is available when the screen saver application is registered. The screen saver that accesses local content can be started only when the following function is set to [Allow]: [Administrator Settings] -> [Security Settings] -> [Security Details] -> [Web browser contents access].* | | |
| Auto Reset | - | | |
| Job Reset | When Account is changed | It will not be displayed when [Service Mode] -> [Billing Setting] -> [Management Function Choice] shows that the authentication device 2 is mounted. | |
| | When original is set on ADF | - | |
| | Next Job | Staple Setting | - |
| | | Original Set/Bind Direction | - |
| | | Reset Data After Job | - |
| | Default Basic/Enlarge Display Common Setting | - | |

• *: North America only.

### (j) User Box Settings

| Key name | Function/Precondition |
|---|---|
| Delete Unused User Box | - |
| Delete Secure Print Documents | - |
| Auto Delete Secure Document | - |
| Encrypted PDF Delete Time | - |
| ID & Print Delete Time | This is displayed when [Administrator Settings] -> [User Authentication/Account Track] -> [User Authentication Settings] -> [Administrative Settings] -> [ID & Print Settings] is set to “ON.” |
| Document Hold Setting | - |
| External Memory Function Settings | - |
| Allow/Restrict User Box | - |
| ID & Print Delete after Print Setting | - |
| Document Delete Time Setting | - |
| Document in MFP Shared Folder Delete Time Setting | This is displayed when [Administrator Settings] -> [Network Settings] -> [SMB Settings] -> [SMB Server Settings] -> [Share SMB File Setting] is set to “ON”. |

### (2) Administrator Settings > System Settings [2/3]

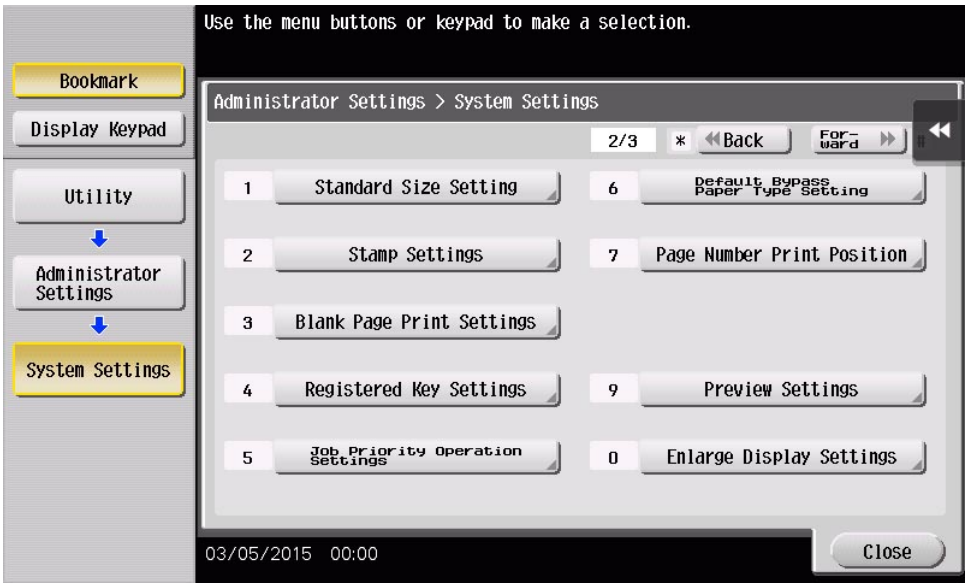


**NOTE**

- **Keys displayed on screens are different depending on the setting.**
- **For details of the utility functions, refer to "User's Guide."**

| Key name | Function/Precondition | |
|---|---|---|
| Standard Size Setting | Original Glass Original Size Detect | It will be displayed when [Service Mode] -> [Enhanced Security] -> [Administrator Feature Level] is set to “Level 2.” |
| | Foolscap Size Setting | |
| Stamp Settings | Header/Footer Settings | - |
| | Fax TX Settings | - |
| Blank Page Print Settings | - | |
| Registered Key Settings | Hard Key | - |
| | Softkey | - |
| Job Priority Operation Settings | Fax RX Job Priority | - |
| | Skip Job (Fax) | - |
| | Skip Job (Copy, Print) | - |
| Default Bypass Paper Type Setting | - | |
| Page Number Print Position | - | |
| Preview Settings | Original Direction Confirmation Screen | - |
| | Realtime Preview | - |
| | Set key Initial display | - |
| | Preview Display Conditions (Standard Application) | - |
| | Preview Display Conditions (Registered Application) | - |
| Enlarge Display Settings | Display Default Settings | - |
| | Apply Basic Setting to Enlarge Display | - |

### (3) Administrator Settings > System Settings [3/3]

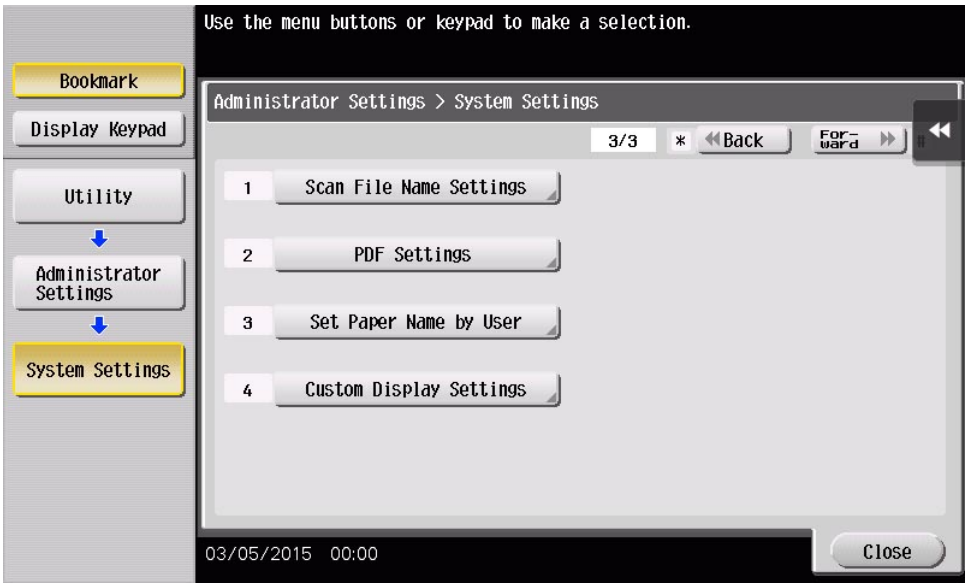


**NOTE**

- **Keys displayed on screens are different depending on the setting.**
- **For details of the utility functions, refer to "User's Guide."**

| Key name | Function/Precondition | | |
|---|---|---|---|
| Scan File Name Settings | Function Mode Initial | - | |
| | Supplementary File Name | - | |
| PDF Settings | PDF/A Default Settings | • This is displayed when the optional i-Option LK-102 v3 and upgrade kit UK-211 are enabled.<br>• To use the searchable PDF function, the optional upgrade kit UK-211 and i-Option LK-105 v4 is required. | |
| | PDF Web Optimization Default Settings | | |
| | Searchable PDF Settings | | |
| Set Paper Name by User | - | | |
| Custom Display Settings | Main Menu Default Settings | - | |
| | Main Menu Display Settings | - | |
| | Custom Function Pattern Selection | When a custom function pattern is registered or imported in [Service Mode] -> [System 2] -> [Custom Pattern], the pattern ([Custom Pattern 1] to [Custom Pattern 3]) also can be selected. | |
| | User/Admin Function Permissions | Setting is disabled if user authentication or account track is not performed. | |
| | Function Display Key Permission Setting | Copy/Print | When selecting [Allow], [Function Display Key (Copy/Print)] is displayed in [User Settings] -> [Custom Display Settings] and you can configure the setting. |
| | | Send/Save | • When selecting [Allow], [Function Display Key (Send/Save)] is displayed in [User Settings] -> [Custom Display Settings] and you can configure the setting.<br>• When selecting [Allow], [Function Display Key (Fax TX)] is displayed in [User Settings] -> [Custom Display Settings] and you can configure the setting. |
| | Temporary Change Language Setting | The temporarily enabled language is returned to the language configured in [User Settings] after any of the following operations.<br>• Main power switch OFF<br>• Power key OFF<br>• Sleep mode<br>• Low power mode<br>• System Auto Reset<br>• Logout | |
| | Display 10 Keypad when entering Number of Sets | - | |
| | Widget Settings | - | |
| | Slide Menu Settings | - | |

### 2.3.2 Administrator/Machine Settings

**Administrator Settings > Administrator/Machine Settings**

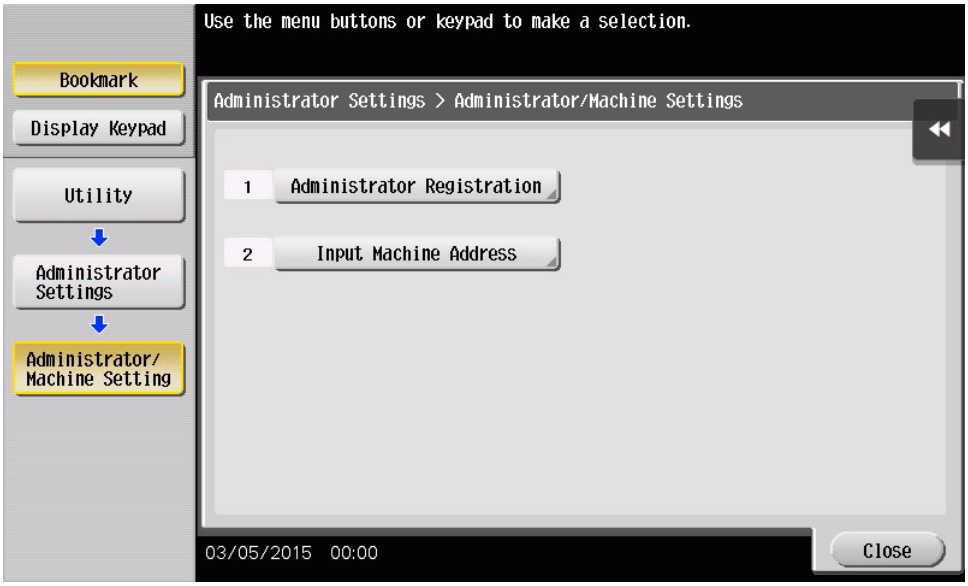


**NOTE**

- **Keys displayed on screens are different depending on the setting.**
- **For details of the utility functions, refer to "User's Guide."**

| Key name | Function/Precondition |
|---|---|
| Administrator Registration | - |
| Input Machine Address | - |

### 2.3.3 One-Touch/User Box Registration

**Administrator Settings > One-Touch/User Box Registration**

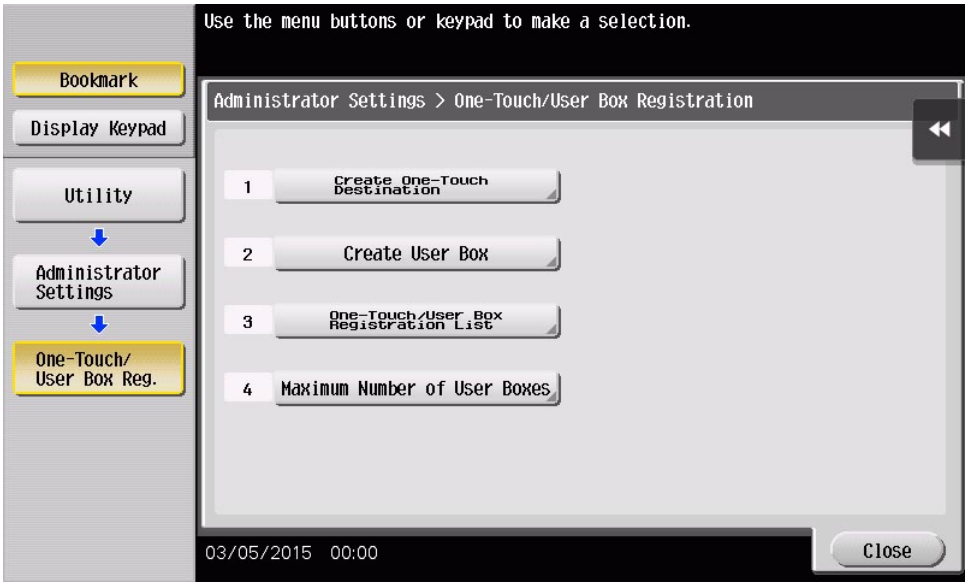


**NOTE**

- **Keys displayed on screens are different depending on the setting.**
- **For details of the utility functions, refer to "User's Guide."**

| Key name | Function/Precondition | | |
|---|---|---|---|
| Create One-Touch Destination | Address Book (Public)/ (Personal) | E-Mail | - |
| | | User Box | • It will not be displayed when [Service Mode] -> [Billing Setting] shows that the authentication device 2 is mounted.<br>• It will not be displayed when [Service Mode] -> [Billing Setting] -> [Management Function Choice] shows that the vendor 2 is mounted. |
| | | Fax | It will be displayed only when [Service Mode] -> [System 2] -> [Option Board Status] shows that fax is set to “Set.” |
| | | PC (SMB) | - |
| | | FTP | - |

| Key name | Function/Precondition | | |
|---|---|---|---|
| | | WebDAV | - |
| | | IP Address Fax | It will be displayed when [Administrator Settings] -> [Network Settings] -> [Network Fax Settings] -> [Network Fax Function Settings] -> [IP Address Fax Function] is set to “ON.” |
| | | Internet Fax | It will be displayed when [Administrator Settings] -> [Network Settings] -> [Network Fax Settings] -> [Network Fax Function Settings] -> [Internet Fax Function] is set to “ON.” |
| | Group | - | |
| | E-Mail Settings | E-Mail Subject | - |
| | | E-mail Body | - |
| Create User Box | Public/Personal User Box | - | |
| | Bulletin Board User Box | - | |
| | Relay User Box | - | |
| | Annotation User Box | - | |
| One-Touch/User Box Registration List | Address Book List | - | |
| | Group List | - | |
| | Program List | - | |
| | E-Mail Subject/Text List | - | |
| Maximum Number of User Boxes | • If the maximum number of user boxes is set to “0”, you cannot create new ones.<br>• If the selected user has already created three user boxes, for example, you can set the maximum number of user boxes within the range of 3 to 1000. | | |

### 2.3.4 User Authentication/Account Track

#### (1) Administrator Settings > User Authentication/Account Track [1/2]

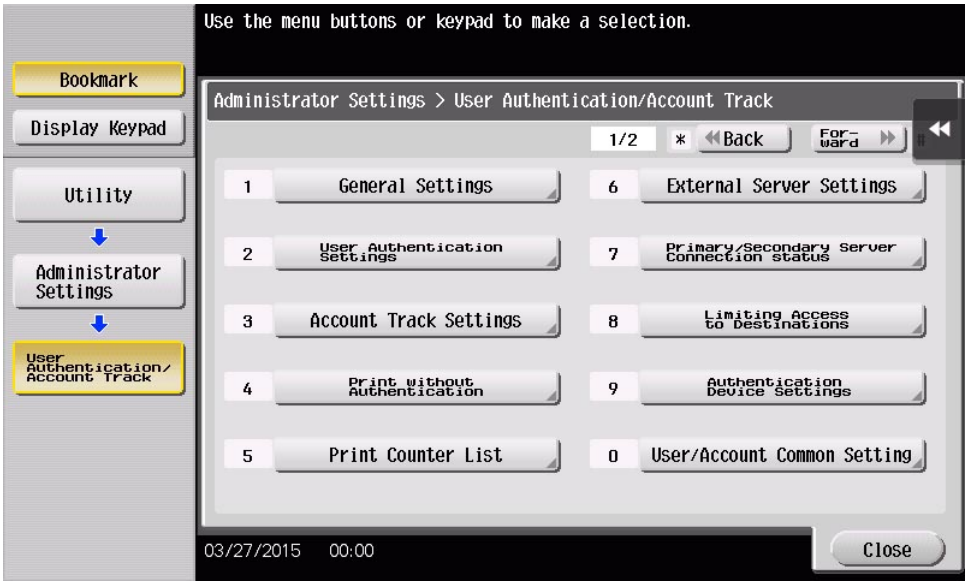


**NOTE**

- **Keys displayed on screens are different depending on the setting.**
- **It will not be displayed when [Service Mode] -> [Billing Setting] -> [Management Function Choice] shows that key counter or vendor 2 is mounted.**
- **Before registering a user, select an authentication method. If all management data is cleared after the authentication method was selected, the histories of the registered users, print, send, receive, and save jobs are deleted.**
- **For details of the utility functions, refer to "User's Guide."**

| Key name | Function/Precondition | | |
|---|---|---|---|
| General Settings | User Authentication | Authentication Method | • If [Administrator Settings] -> [Security Settings] -> [Enhanced Security Mode] is set to “ON”, selecting “OFF” in this setting cancels enhanced security mode. |
| | | Default Authentication Method | • [External Server Authentication] cannot be selected when external servers are not registered in [Administrator Settings] -> [User Authentication/ Account Track] -> [External Server Settings].<br>• [External Server Authentication] cannot be selected when the presence of management device is set in [Service Mode] -> [Billing Setting] -> [Management Function Choice]. |
| | | Overwrite User Info | • When the external server authentication is used, authenticated user information is also managed on this machine. If the number of users who have executed the external server authentication reaches the maximum number of users this machine can manage, authentication of any new users will not be permitted. If you select [Allow], the oldest authenticated user information is erased and the new user is registered.<br>• If [Enhanced Server Authentication] or [Main + Enhanced Server] is selected with [Authentication Method], [Allow] is specified forcibly. |
| | | Temporarily Save Authentication Info. | - |
| | Public User Access | • This setting is not available without user authentication.<br>• If [Administrator Settings] -> [Security Settings] -> [Enhanced Security Mode] is set to “ON”, selecting “ON” in this setting cancels enhanced security mode. | |
| | Prohibited Function Login Setting | - | |
| | Account Track | - | |
| | Account Track Input Method | • This setting is not available without the account track.<br>• “Password Only” cannot be set when using both user authentication and account track. | |
| | Synchronize User Authentication & Account Track | The setting is available only when carrying out the user authentication and account track. | |
| | When # of Jobs Reach Maximum | - | |
| | Number of Counters Assigned | • It will not be displayed when [Service Mode] -> [Billing Setting] -> [Management Function Choice] shows that the management device 2 is mounted.<br>• The setting is available only when carrying out the user authentication and account track. | |
| | Ticket Hold Time Setting | This setting takes effect only when the authentication server type is set to active directory. | |
| | LDAP-IC Card Authentication Setting | Setting Up LDAP | • It will be displayed when [Service Mode] -> [Billing Setting] shows that the authentication device 2 is mounted.<br>• When [Administrator Settings] -> [User Authentication/Account Track] -> [General Settings] -> [User Authentication] is set to [External Server Authentication] or [Main + External Server], this function is available. |
| | | LDAP Server Connection Settings | |
| | | Secondary Auth. server setting | |
| | Enable NFC | This setting is synchronized with [Administrator Settings] -> [System Connection] -> [Mobile Connection Settings] -> [Simple Connection Setting] -> [Enable NFC]. | |
| | Enable Bluetooth LE | • It will be displayed when the optional local interface kit EK-609 is mounted.<br>• This setting is synchronized with [Administrator Settings] -> [System Connection] -> [Mobile Connection Settings] -> [Simple Connection Setting] -> [Enable Bluetooth LE]. | |

| Key name | Function/Precondition | | |
|---|---|---|---|
| User Authentication Settings | Administrative Settings | User Name List | • This setting is not available without user authentication.<br>• If [Administrator Settings] -> [Security Settings] -> [Enhanced Security Mode] is set to “ON”, selecting “ON” in this setting cancels enhanced security mode. |
| | | Default Function Permission | This setting is not available without user authentication. |
| | | ID & Print Settings | |
| | | ID & Print Operation Settings | • This setting is not available without user authentication.<br>• It will be displayed when [Service Mode] -> [Billing Setting] shows that the authentication device 2 is mounted. |
| | | Default Operation Selection | - |
| | | Login Allowed with Administrative Rights | - |
| | User Registration | • It cannot be entered when conducting authentication by external server.<br>• [Register Auth. Info.] does not appear when the presence of Authentication Device 2 is unset in [Service Mode] -> [Billing Setting].<br>• [Custom Pattern Function] does not appear when [Administrator Settings] -> [System Settings] -> [Custom Display Settings] -> [User/Admin Function Permissions] is unset to “Allow.”<br>• [Synchronize Account Track] does not appear when [Administrator Settings] -> [User Authentication/Account Track] -> [General Settings] -> [Synchronize User Authentication & Account Track] is unset to “Synchronize by User.”<br>• [Permission Setting] in [Function Permission/Authority] does not appear when [Administrator Settings] -> [User Authentication/Account Track] -> [User Authentication Settings] -> [Administrative Settings] -> [Login Allowed with Administrative Rights] is unset to “Allow.” | |
| | User Counter | - | |
| Account Track Settings | Account Track Registration | • When the “Password Only” is selected for [Account Track Input Method], [Account Name] does not appear.<br>• When the “Account Name & Password” is selected for [Account Track Input Method], [Name] does not appear.<br>• [Custom Pattern Function] does not appear when [Administrator Settings] -> [System Settings] -> [Custom Display Settings] -> [User/Admin Function Permissions] is unset to “Allow.” | |
| | Account Track Counter | - | |
| Print without Authentication | If [Administrator Settings] -> [Security Settings] -> [Enhanced Security Mode] is set to “ON”, selecting “Allow” in this setting cancels enhanced security mode. | | |
| Print Counter List | • The setting is available only when carrying out the user authentication or account track.<br>• It will not be displayed when [Service Mode] -> [Billing Setting] -> [Management Function Choice] shows that key counter, vendor 2, or management device 2 is mounted. | | |
| External Server Settings | • Neither [NTLM v1] nor [NTLM v2] appear when “OFF” is selected in [Administrator Settings] -> [Network Settings] -> [SMB Settings] -> [Client Settings] -> [User Authentication (NTLM)].<br>• [NDS over IPX] and [NDS over TCP/IP] do not appear when “OFF” is selected in [Administrator Settings] -> [Network Settings] -> [NetWare Settings] -> [User Authentication Setting (NDS)].<br>• [NDS over IPX] does not appear when "OFF" is selected in [Administrator Settings] -> [Network Settings] -> [NetWare Settings] -> [IPX Settings]. | | |
| Primary/Secondary Server Connection Status | - | | |
| Limiting Access to Destinations | Create Group | - | |
| | Apply Levels/Groups to Destinations | - | |
| | Apply Levels/Groups to Users | - | |
| Authentication Device Settings | General Settings | • It will be displayed when [Service Mode] -> [Billing Setting] -> [Management Function Choice] shows that the authentication device 2 is mounted.<br>• It will be displayed when [Administrator Settings] -> [Network Settings] -> [IWS Settings] is set to “ON.”<br>• For details of the functions, refer to "I.2.11.1 User Authentication/Account Track-Authentication Device Settings." | |
| | Logoff Settings | | |
| User/Account Common Setting | Logout Confirmation Screen Display Setting | - | |
| | Single Color > 2 Color Output Management | - | |
| | Counter Remote Control | - | |

### (2) Administrator Settings > User Authentication/Account Track [2/2]

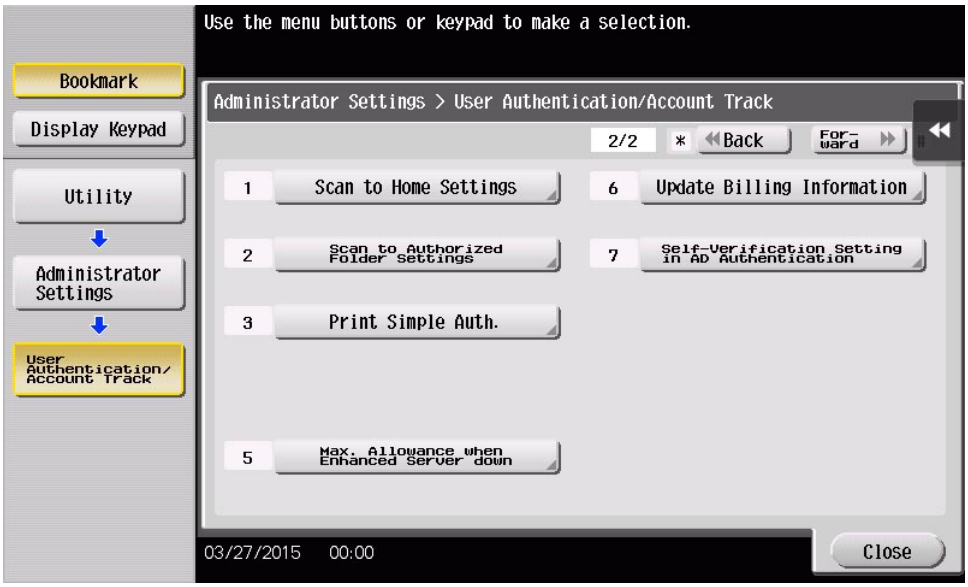


**NOTE**

- **Keys displayed on screens are different depending on the setting.**
- **It will not be displayed when [Service Mode] -> [Billing Setting] -> [Management Function Choice] shows that key counter or vendor 2 is mounted.**
- **Before registering a user, select an authentication method. If all management data is cleared after the authentication method was selected, the histories of the registered users, print, send, receive, and save jobs are deleted.**
- **For details of the utility functions, refer to "User's Guide."**

| Key name | Function/Precondition | |
|---|---|---|
| Scan to Home Settings | - | |
| Scan to Authorized Folder Settings | - | |
| Print Simple Auth. | Authentication Setting | - |
| | Register Authentication Server | When [Administrator Settings] -> [User Authentication/Account Track] -> [General Settings] -> [User Authentication] is set to [External Server Authentication], this function is available. |
| | Secondary Auth. server setting | - |
| Max. Allowance when Enhanced Server down | It will be displayed when [Administrator Settings] -> [User Authentication/Account Track] -> [General Settings] -> [User Authentication] -> [Temporarily Save Authentication Info.] is set to “Enable.” | |
| Update Billing Information | - | |
| Self-Verification Setting in AD Authentication | If you change [Host Name] or [Domain Name] while Active Directory's single sign-on is enabled on this machine, [Administrator Settings] -> [Network Settings] -> [Single Sign-On Setting] -> [Domain Login Setting] is changed to [OFF]. | |

## 2.3.5 Network Settings

### (1) Administrator Settings > Network Settings [1/4]

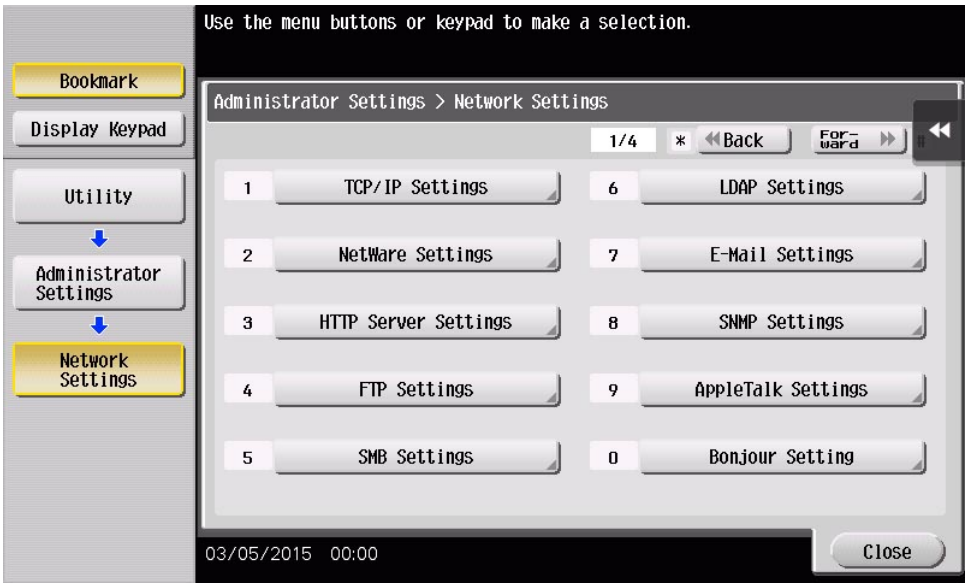

**NOTE**

- **Keys displayed on screens are different depending on the setting.**
- **For details of the utility functions, refer to "User's Guide."**

| Key name | Function/Precondition | |
|---|---|---|
| TCP/IP Settings<br>TCP/IP Settings - Wired Setting *1 | IPv4 Settings | - |
| | IPv6 Settings | - |
| | DNS Host | - |
| | DNS Domain | - |
| | DNS Server Settings (IPv4) | - |
| | DNS Server Settings (IPv6) | - |
| | IPsec Settings | - |
| | IPv4 Filtering (Permit Access) | Setting will be available when [Administrator Settings] -> [Network Settings] -> [TCP/IP Settings] -> [Quick IP Filtering] is set to “No Filtering”. |
| | IPv4 Filtering (Deny Access) | |
| | IPv6 Filtering (Permit Access) | |
| | IPv6 Filtering (Deny Access) | |
| | Quick IP Filtering | - |
| | RAW Port Number | - |
| | LLMNR Setting | - |
| TCP/IP Settings - Wireless Setting *1 | IPv4 Settings | - |
| | IPv6 Settings | - |
| NetWare Settings | IPX Settings | - |
| | NetWare Print Settings | - |
| | User Authentication Setting (NDS) | - |
| HTTP Server Settings | • It will not be displayed when [Service Mode] -> [Billing Setting] shows that the authentication device 2 is mounted.<br>• To use the PageScope Web Connection, enable "JavaScript" and "Cookie" of the Web browser. If this machine is connected to the internet via a proxy server, register the Proxy Settings of the Web browser as "Exceptions". When the PageScope Web Connection is not displayed properly even if the above settings have been conducted, delete the cache of the Web browser. | |
| FTP Settings | FTP TX Settings | - |
| | FTP Server Settings | If [Administrator Settings] -> [Security Settings] -> [Enhanced Security Mode] or [Image Log Transfer Settings] is set to “ON”, selecting “ON” for the [FTP Server Settings] cancels enhanced security mode. |
| SMB Settings | Client Settings | • It will not be displayed when [Service Mode] -> [Billing Setting] shows that the authentication device 2 is mounted.<br>• Select [ON] for [DFS Setting] when using SMB transmission under an environment that uses a distributed file system (DFS). DFS function is supported only in the environment that structured with the following Windows server operating systems.<br>:Windows Server 2003 , Windows Server 2008, Windows Server 2008 R2, Windows Server 2012 , Windows Server 2012 R2 |
| | SMB Server Settings | It will not be displayed when [Service Mode] -> [Billing Setting] shows that the authentication device 2 is mounted. |
| | WINS/NetBIOS Settings | |
| | Direct Hosting Setting | |
| LDAP Settings | Enabling LDAP | It will not be displayed when [Service Mode] -> [Billing Setting] shows that the authentication device 2 is mounted. |
| | Setting Up LDAP | • It will not be displayed when [Service Mode] -> [Billing Setting] shows that the authentication device 2 is mounted.<br>• The [Check Connection] does not display when [Enabling LDAP] is set to “OFF.”<br>• [Check Connection] does not display when [Administrator Settings] -> [Security Settings] -> [Security Details] -> [Manual Destination Input] is set to “Restrict.”<br>• [Login Name] and [Password] cannot be configured when authentication method is set to anonymous. |
| | Default LDAP Server Setting | - |
| | Default Search Result Display Setting | |
| E-Mail Settings | E-Mail TX (SMTP) | • It will not be displayed when [Service Mode] -> [Billing Setting] shows that the authentication device 2 is mounted. |

| Key name | Function/Precondition | |
|---|---|---|
| | | • When [SMTP Authentication] is set to "ON", enter the [User ID], [Password], [Domain Name], [Authentication Setting], and [SMTP Authentication Method]. |
| | E-Mail RX (POP) | • It will not be displayed when [Service Mode] -> [Billing Setting] shows that the authentication device 2 is mounted.<br>• [Check for New Messages] and [Polling Interval] do not display when [Administrator Settings] -> [Network Setting] -> [Network Fax Settings] -> [Network Fax Function Settings] -> [Internet Fax Function] is set to “OFF”. |
| | E-mail RX Print | • It will not be displayed when [Service Mode] -> [Billing Setting] shows that the authentication device 2 is mounted.<br>• This is displayed when the optional i-Option LK-110 v2 and upgrade kit UK-211 are enabled.<br>• [E-Mail Body Print] displays only when Switch No. “152” is set to “01” in HEX Assignment in [Service Mode] -> [System 2] -> [Software Switch Setting]. |
| | S/MIME Communication Settings | It will not be displayed when [Service Mode] -> [Billing Setting] shows that the authentication device 2 is mounted. |
| SNMP Settings | • It will not be displayed when [Service Mode] -> [Billing Setting] shows that the authentication device 2 is mounted.<br>• If [Administrator Settings] -> [Security Settings] -> [Enhanced Security Mode] is set to “ON”, enabling [SNMP v1/v2 Settings] cancels enhanced security mode.<br>• If [Administrator Settings] -> [Security Settings] -> [Enhanced Security Mode] is set to “ON”, setting [Security Level] to [OFF] cancels enhanced security mode. | |
| AppleTalk Settings | It will not be displayed when [Service Mode] -> [Billing Setting] shows that the authentication device 2 is mounted. | |
| Bonjour Setting | - | |

• *1: It will be displayed when the optional upgrade kit UK-212 is mounted.

### (2) Administrator Settings > Network Settings [2/4]

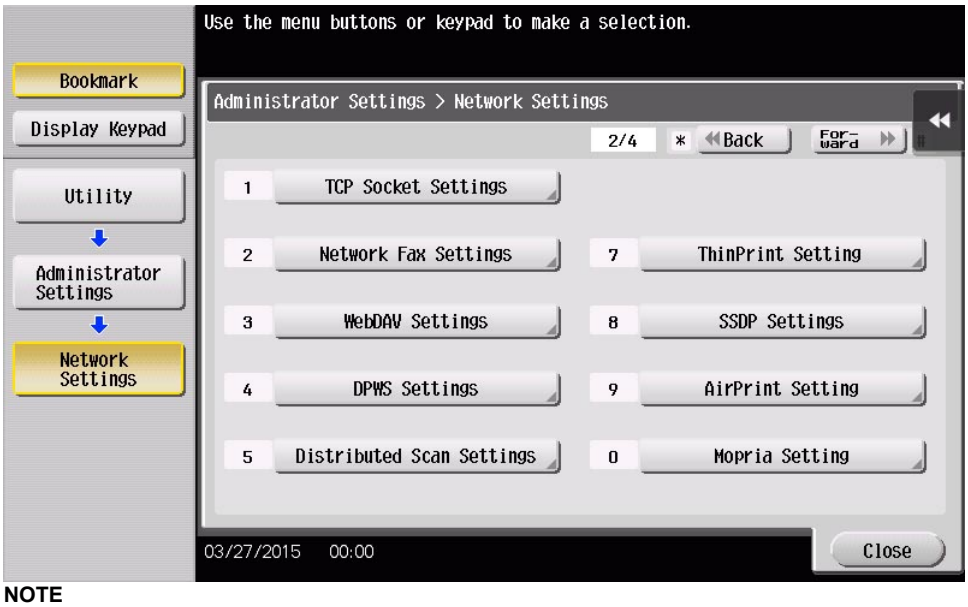


**NOTE**

- **Keys displayed on screens are different depending on the setting.**
- **For details of the utility functions, refer to "User's Guide."**

| Key name | Function/Precondition | | |
|---|---|---|---|
| TCP Socket Settings | TCP Socket | - | |
| | TCP Socket (ASCII Mode) | - | |
| Network Fax Settings | Network Fax Function Settings | IP Address Fax Function | • This setting is available when [IP Address Fax] or [Internet Fax] is set to “ON” from [Service Mode] -> [System 2] -> [Network Fax Settings].<br>• For details of the functions, refer to I.2.11.2 Network Settings-Network Fax Settings. |
| | | Internet Fax Function | |
| | SMTP TX Settings | - | |
| | SMTP RX Settings | - | |
| WebDAV Settings | WebDAV Client Settings | - | |
| | WebDAV Server Settings | • If [Administrator Settings] -> [Security Settings] -> [Enhanced Security Mode] is set to “ON”, setting [SSL Setting] to [SSL Only] cancels enhanced security mode.<br>• Press [Initial Password] under [Password Setting] to initialize the password. (Default password: sysadm) | |

| Key name | Function/Precondition | |
|---|---|---|
| | Proxy Setting for Remote Access | To configure the settings of the proxy server used when MFP accesses to KM license server via WebDAV connection from [Administrator Settings] -> [License Settings] -> [Install License] (WebDAV connection) or [Service Mode] -> [Billing Setting] to activate i-Option function. |
| DPWS Settings | DPWS Common Settings | - |
| | DPWS Extension Settings | - |
| | Printer Settings | - |
| | Scanner Settings | - |
| Distributed Scan Settings | • It will be displayed when [Administrator Settings] -> [Network Settings] -> [DPWS Settings] -> [Scanner Settings] is set to “ON.”<br>• It will be displayed when [Administrator Settings] -> [Network Settings] -> [DPWS Settings] -> [DPWS Common Settings] -> [Enable SSL] is set to “ON.” | |
| ThinPrint Setting | This is displayed only when the optional i-Option LK-111 is enabled. | |
| SSDP Settings | - | |
| AirPrint Setting | Print Settings | - |
| | Scanner Setting | - |
| Mopria Setting | - | |

### (3) Administrator Settings > Network Settings [3/4]

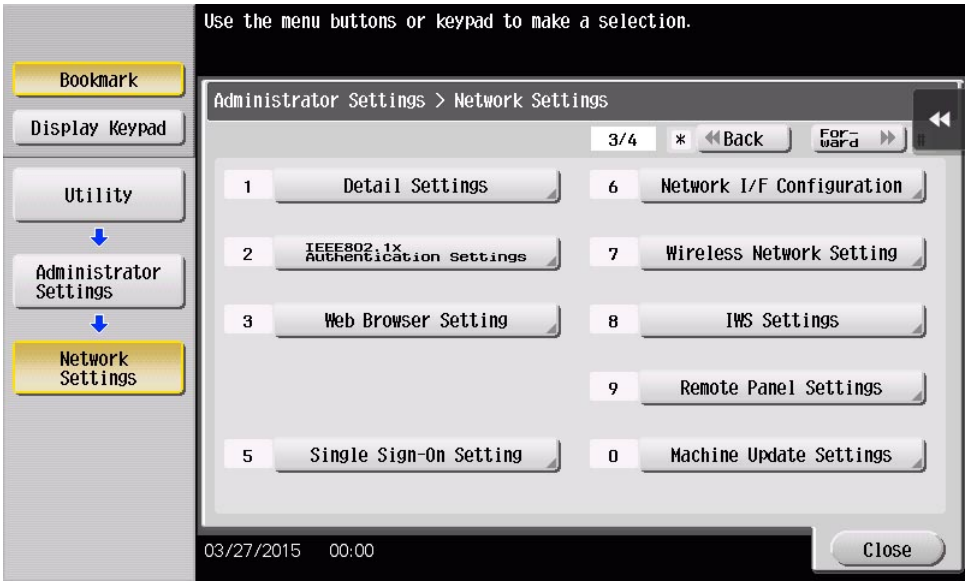


**NOTE**

- **Keys displayed on screens are different depending on the setting.**
- **For details of the utility functions, refer to "User's Guide."**

| Key name | Function/Precondition | | |
|---|---|---|---|
| Detail Settings | Device Setting | - | |
| | Time Adjustment Setting | - | |
| | Status Notification Setting | Register Notification Address | It will not be displayed when [Service Mode] -> [Billing Setting] shows that the authentication device 2 is mounted. |
| | Total Counter Notification Settings | - | |
| | PING Confirmation | - | |
| | SLP Setting | - | |
| | LPD Setting | - | |
| | Prefix/Suffix Setting | ON/OFF Setting | - |
| | | Prefix/Suffix Setting | - |
| | Error Code Display Setting | - | |
| IEEE802.1X Authentication Settings | IEEE802.1X authentication settings are made with PageScope Web Connection. | | |
| Web Browser Setting | Web Browser Usage Settings | To enable the Web browser function, this machine is automatically connected to the License Management Server (LMS) on the Internet in order to register the license. Check that this machine can be connected to the Internet before beginning this procedure. | |
| | File Operation Permission Setting | | |

| Key name | Function/Precondition | | |
|---|---|---|---|
| Single Sign-On Setting | Domain Login Setting | When [Administrator Settings] -> [User Authentication/Account Track] -> [General Settings] -> [User Authentication] is set to [External Server Authentication] or [Main + External Server], this function is available. | |
| | Applications and Settings | | |
| | Auto Log Out Time | | |
| Network I/F Configuration *1 | For details of the functions, refer to I.2.11.3 Network Settings-Network I/F Configuration. | | |
| Wireless Network Setting *1 | For details of the functions, refer to I.2.11.4 Network Settings-Wireless Network Setting. | | |
| IWS Settings | For details of the functions, refer to I.2.11.5 Network Settings-IWS Settings. | | |
| Remote Panel Settings | For details of the functions, refer to "I.2.11.6 Network Settings - Remote Panel Settings (outline)", "I.2.11.7 Network Settings - Remote Panel Settings (Server Settings)", and"I.2.11.8 Network Settings - Remote Panel Settings (Client Settings)". | | |
| Machine Update Settings | Internet ISW Settings | Update Firmware at Specified Time | • This is displayed when [Function Setting] is set to [ON] in [Service Mode] -> [Machine Update Setting] -> [Internet ISW] -> [Internet ISW Set].<br>• This is displayed when [Open Mode Settings] is set to [Set] in [Service Mode] -> [Machine Update Setting] -> [Internet ISW] -> [Internet ISW Set].<br>• For details of the functions, refer to I.2.11.9 Machine Update Settings - Internet ISW Settings. |
| | | FTP Server Settings | • This is displayed when [Function Setting] is set to [ON] in [Service Mode] -> [Machine Update Setting] -> [Internet ISW] -> [Internet ISW Set].<br>• This is displayed when [FTP data acquisition setting] is set to [ON] in [Service Mode] -> [Machine Update Setting] -> [Internet ISW] -> [FTP Setting].<br>• For details of the functions, refer to I.2.11.9 Machine Update Settings - Internet ISW Settings. |
| | | Firmware Update Parameters | • This is displayed when [Function Setting] is set to [ON] in [Service Mode] -> [Machine Update Setting] -> [Internet ISW] -> [Internet ISW Set].<br>• This is displayed when [Open Mode Settings] is set to [Set] in [Service Mode] -> [Machine Update Setting] -> [Internet ISW] -> [Internet ISW Set].<br>• To download the firmware, in addition to the necessary proxy settings configured in [FTP Server Settings], you need to configure appropriate settings in [Service Mode] -> [Machine Update Setting] ->[Internet ISW] -> [HTTP Setting], [FTP Setting], and [Forwarding Access Setting].<br>• For details of the functions, refer to I.2.11.9 Machine Update Settings - Internet ISW Settings. |
| | Machine Auto Update setting | Auto Update Settings for This Machine | • This is displayed when [Function Setting] is set to [ON] in [Service Mode] -> [Machine Update Setting] -> [Internet ISW] -> [Internet ISW Set].<br>• This function is same (I.5.31.7 Machine Auto Update setting - Auto Update setting) as that of the service mode, but it will not be used together with the function of the service mode.<br>• For details of the functions, refer to I.2.11.10 Machine Update Settings - Machine Auto Update setting. |
| | | Relay Server Function Setting | |
| | | Log TX setting | |
| | | Log Confirmation | |
| | | Immediate Update | |
| | | Machine Update Password | |
| | HTTP Proxy Settings | For details of the functions, refer to I.2.11.11 Machine Update Settings - HTTP Proxy Settings. | |

- *1: It will be displayed when the optional upgrade kit UK-212 is mounted.

### (4) Administrator Settings > Network Settings [4/4]




**NOTE**

- **Keys displayed on screens are different depending on the setting.**
- **For details of the utility functions, refer to "User's Guide."**

| Key name | Function/Precondition |
|---|---|
| bizhub Remote Access Setting | To remote-control the Control Panel of this machine using an Android/iOS terminal, you need to install Remote Access on the Android/iOS terminal. Also, [TCP Socket] must be set to [ON] for [Administrator Settings] -> [Network Settings] -> [TCP Socket Settings]. |
| Network Settings List | - |

## 2.3.6 Copier Settings

### (1) Administrator Settings > Copier Settings [1/2]

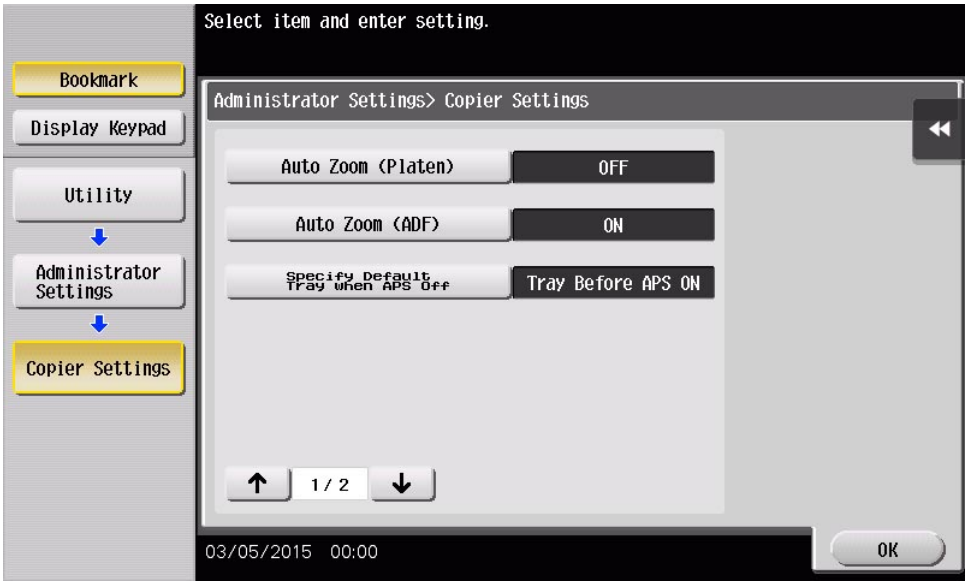


**NOTE**

- **Keys displayed on screens are different depending on the setting.**
- **For details of the utility functions, refer to "User's Guide."**

| Key name | Function/Precondition |
|---|---|
| Auto Zoom (Platen) | - |
| Auto Zoom (ADF) | - |
| Specify Default Tray when APS Off | - |

### (2) Administrator Settings > Copier Settings [2/2]

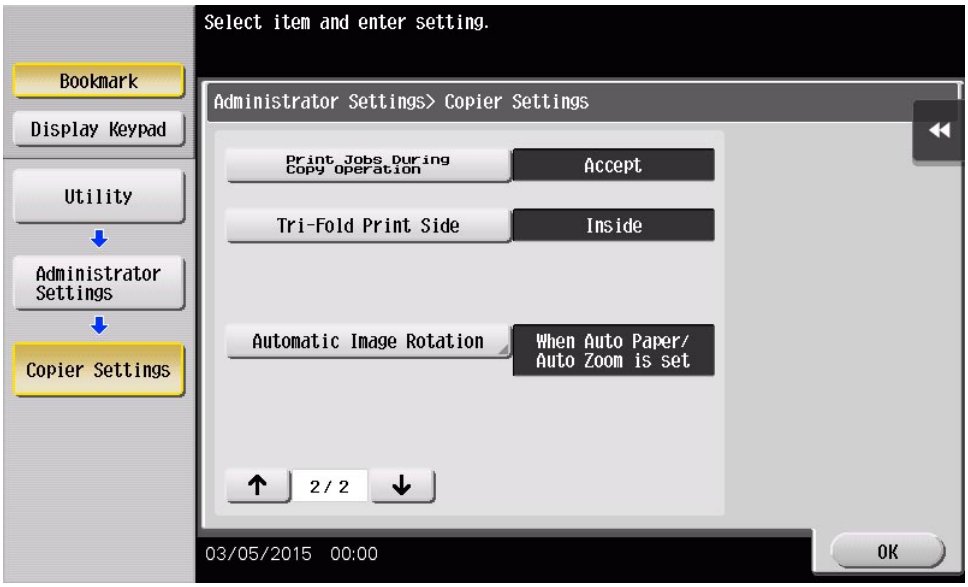


**NOTE**

- **Keys displayed on screens are different depending on the setting.**
- **For details of the utility functions, refer to "User's Guide."**

| Key name | Function/Precondition |
|---|---|
| Print Jobs During Copy Operation | - |
| Tri-Fold Print Side | It will be displayed when the optional finisher FS-534SD is mounted. |
| Automatic Image Rotation | - |

## 2.3.7 Printer Settings

### Administrator Settings > Printer Settings

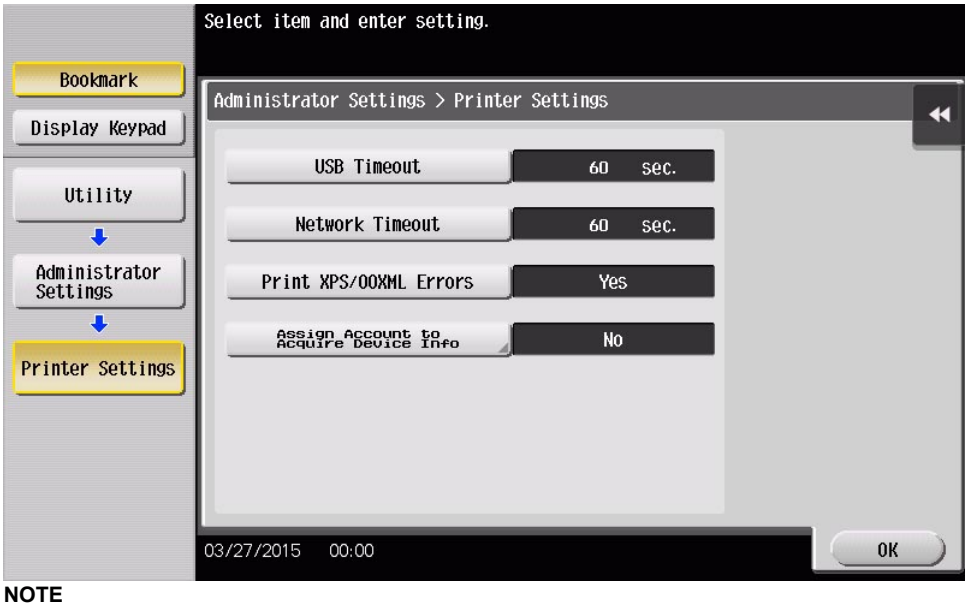


**NOTE**

- **Keys displayed on screens are different depending on the setting.**
- **For details of the utility functions, refer to "User's Guide."**

| Key name | Function/Precondition |
|---|---|
| USB Timeout | - |
| Network Timeout | - |
| Print XPS/OOXML Errors | - |
| Assign Account to Acquire Device Info | - |

### 2.3.8 Fax Settings

#### (1) Administrator Settings > Fax Settings [1/2]

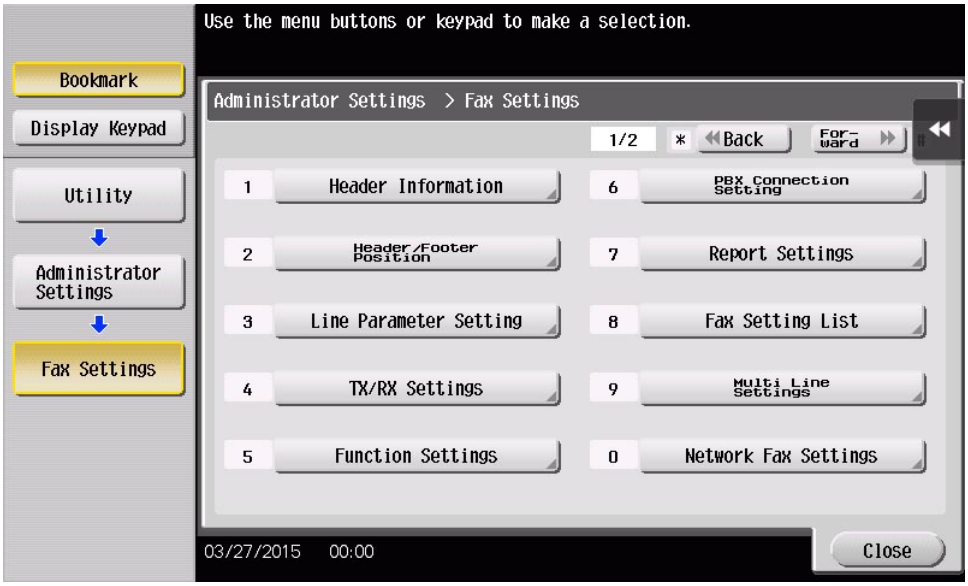


**NOTE**

- **Keys displayed on screens are different depending on the setting.**
- **It will be displayed when the optional fax kit FK-514 is mounted.**
- **For details of the utility functions, refer to "User's Guide."**

#### (a) Header Information

| Key name | Function/Precondition |
|---|---|
| Header Information | - |

#### (b) Header/Footer Position

| Key name | Function/Precondition |
|---|---|
| Header Position | [OFF] cannot be used on the USA and Hong Kong models. |
| TTI Print Position and Character Size | - |
| Print Receiver's Name | This setting is not available on the USA and Hong Kong models. |
| Footer Position | - |

#### (c) Line Parameter Setting

| Key name | Function/Precondition |
|---|---|
| Dialing Method | - |
| Receive Mode | It will not be displayed when [Service Mode] -> [Billing Setting] -> [Management Function Choice] shows that the management device 2 is mounted. |
| Number of RX Call Rings (Receive Time Interval Setting) | When [Service Mode] -> [FAX] -> [Network] -> [Network Setting 1] -> [Receive Signal Detection Mode] is set to "Time", [Receive Time Interval Setting] will be displayed. |
| Number of Redials | It will not be displayed when [Service Mode] -> [Billing Setting] -> [Management Function Choice] shows that the vendor 2 is mounted. |
| Redial Interval | |
| Line Monitor Sound | - |
| Line Monitor Sound Volume (Send) | - |
| Line Monitor Sound Volume (Receive) | - |
| Manual RX V34 Settings | - |
| Ring Detection Pattern | This setting is available only on the New Zealand model. |

#### (d) TX/RX Settings

| Key name | Function/Precondition |
|---|---|
| Duplex Print (RX) | It will not be displayed when [Administrator Settings] -> [Fax Settings] -> [TX/RX Settings] -> [Print Separate Fax Pages] is set to "ON." |
| Letter/Ledger over A4/A3 | - |
| Print Paper Selection | - |

| Key name | Function/Precondition |
|---|---|
| Print Paper Size | To make the setting of Print Paper Size enable, set [Administrator Settings] -> [Fax Settings] -> [TX/RX Settings] -> [Tray Selection for RX Print] to “Auto.” |
| Incorrect User Box No. Entry | - |
| Tray Selection for RX Print | - |
| Min. Reduction for RX Print | - |
| Print Separate Fax Pages | It will not be displayed when [Administrator Settings] -> [Fax Settings] -> [TX/RX Settings] -> [Duplex Print (RX)] is set to “ON.” |
| File After Polling TX | - |
| No. of Sets (RX) | - |
| Individual Receiving Line Setup | It will be displayed only when multiple lines are used and [Administrator Settings] -> [Fax Settings] -> [Multi Line Settings] -> [Fax Line 2 to 4] -> [Multi Line Settings] -> [Line 2 to 4 Setting] is set to “TX and RX” or “RX Only”. |
| Individual Sender Line Setup | It will be displayed only when multiple lines are used and [Administrator Settings] -> [Fax Settings] -> [Multi Line Settings] -> [Fax Line 2 to 4] -> [Multi Line Settings] -> [Line 2 to 4 Setting] is set to “TX and RX” or “TX Only”. |
| RX Document Print Settings | - |

### (e) Function Settings

| Key name | | Function/Precondition |
|---|---|---|
| Function ON/OFF Setting | F-Code TX | When the setting is changed, turn off the main power switch and turn it on again more than 10 seconds after. |
| | Relay RX | It will be displayed when [Service Mode] -> [FAX] -> [System] -> [Display Setting] -> [Relay] is set to “ON.” |
| | Relay Printing | |
| | Destination Check Display Function | - |
| | Confirm Address (TX) | - |
| | Confirm Address (Register) | - |
| | PIN Code Display Mask Function | - |
| Memory RX Setting | | • It will be displayed when [Service Mode] -> [FAX] -> [System] -> [Display Setting] - [Compulsory Memory RX] is set to “ON.”<br>• It will not be displayed when any one of [Administrator Settings] -> [Fax Settings] -> [Function Settings] -> [PC-Fax RX Setting], [Forward TX Setting], or [TSI User Box Setting] is set to “ON.” |
| RX Data Deletion Restriction Settings | Password Deletion | • This setting is not available without user authentication.<br>• This setting is not available without the account track.<br>• This function cannot be set if the User Box Administrator has not been set. |
| | Administrator User Box Deletion | |
| Closed Network RX | | It will be displayed when [Service Mode] -> [FAX] -> [System] -> [Display Setting] -> [Closed area RX] is set to “ON.” |
| Forward TX Setting | | • It will not be displayed when [Service Mode] -> [Billing Setting] shows that the authentication device 2 is mounted.<br>• It will not be displayed when [Service Mode] -> [Billing Setting] -> [Management Function Choice] shows that the vendor 2 is mounted.<br>• It will not be displayed when any one of [Administrator Settings] -> [Fax Settings] -> [Function Settings] -> [PC-Fax RX Setting], [Memory RX Setting], or [TSI User Box Setting] is set to “ON.”<br>• A forwarding address except a case of the fax, specify [File Type] a fax can be converted into a file. The file types able to be specified are PDF, XPS, and TIFF. To specify other file types, set the switch No.124 to [00000001] at Bit assignment/[01] at HEX assignment in [Service Mode] -> [System 2] -> [Software Switch Setting]. |
| Incomplete TX Hold | | • It will be displayed when [Service Mode] -> [FAX] -> [System] -> [Display Setting] -> [Re-Transmission] is set to “ON.”<br>• It will not be displayed when [Service Mode] -> [Billing Setting] -> [Management Function Choice] shows that key counter or vendor 2 is mounted. |
| PC-Fax Permission Setting | | - |
| PC-Fax RX Setting | | It will not be displayed when any one of [Administrator Settings] -> [Fax Settings] -> [Function Settings] -> [Forward TX Setting], [Memory RX Setting], or [TSI User Box Setting] is set to “ON.” |
| TSI User Box Setting | | It will not be displayed when any one of [Administrator Settings] -> [Fax Settings] -> [Function Settings] -> [Forward TX Setting], [Memory RX Setting], or [PC-Fax RX Setting] is set to “ON.” |
| TSI All File Type Settings | | • It will not be displayed when [Service Mode] -> [Billing Setting] -> [Management Function Choice] shows that vendor 2 or key counter IF vendor is mounted.<br>• It will not be displayed when any one of [Administrator Settings] -> [Fax Settings] -> [Function Settings] -> [Forward TX Setting], [Memory RX Setting], or [PC-Fax RX Setting] is set to “ON.” |

| Key name | Function/Precondition |
|---|---|
| | • This is displayed when the optional i-Option LK-110 v2 and upgrade kit UK-211 are enabled. |
| TX-Line Auto Switch Setting | - |

### (f) PBX Connection Setting

| Key name | Function/Precondition |
|---|---|
| PBX Connection Setting | - |

### (g) Report Settings

| Key name | Function/Precondition |
|---|---|
| TX Result Report | - |
| TX Result Report Print Confirmation screen | - |
| Sequential TX Report | - |
| Broadcast Result Report | - |
| Bulletin TX Report | - |
| Relay TX Result Report | It will be displayed when [Service Mode] -> [FAX] -> [System] -> [Display Setting] -> [Relay] is set to “ON.” |
| TX Result Report Print Settings | • This function can be set if E-mail address has been set in [Administrator Settings] -> [Administrator/Machine Settings] -> [Administrator Registration].<br>• This function can be set if "ON" is set for [E-Mail TX (SMTP)] and "ON" is set for [Scan to E-mail] in [Administrator Settings] -> [Network Settings] -> [E-Mail Settings]. |
| Activity Report | It will not be displayed when [Service Mode] -> [Billing Setting] -> [Management Function Choice] shows that the vendor 2 is mounted. |
| Relay Request Report | It will be displayed when [Service Mode] -> [FAX] -> [System] -> [Display Setting] -> [Relay] is set to “ON.” |
| PC-Fax TX Error Report | - |
| Timer Reservation TX Report | - |
| Confidential RX Report | - |
| Network Fax RX Error Report | It will be displayed when either [IP Address Fax Function] or [Internet Fax Function] is set to “ON” in [Administrator Settings] -> [Network Settings] -> [Network Fax Settings] -> [Network Fax Function Settings]. |
| Print Job Number | • It will not be displayed when the report addition information is set to “Diagnosis Code” or “Dial Number” by [Service Mode] -> [FAX] -> [List Output] -> [Report Addition].<br>• It will not be displayed when [Service Mode] -> [System 2] -> [Software Switch Setting] shows that switch No.77 is set to [00000100] at Bit assignment/[04] at HEX assignment. |
| MDN Message | It will be displayed when [Administrator Settings] -> [Network Settings] -> [Network Fax Settings] -> [Network Fax Function Settings] -> [Internet Fax Function] is set to “ON”. |
| DSN Message | |
| Print E-mail Message Body | |

### (h) Fax Setting List

| Key name | Function/Precondition |
|---|---|
| Fax Setting List | It will not be displayed when [Service Mode] -> [Billing Setting] -> [Management Function Choice] shows that the vendor 2 is mounted. (It will be displayed when the Key Counter is mounted when [Service Mode] -> [System 2] -> [Software Switch Setting] shows that switch No.33 is set to [00000001] at Bit assignment/[01] at HEX assignment.) |

### (i) Multi Line Settings

**NOTE**

- **It will be displayed each only when the optional fax kit FK-514 (line 2) or FK-515 (line 3 or line 4) is mounted.**

| Key name | Function/Precondition |
|---|---|
| PC-FAX TX Line Setting | • It will be not displayed when [PC-Fax Permission Setting] is set to “Restrict” in [Administrator Settings] -> [Fax Settings] -> [Function Settings].<br>• Line 2 to 4 will be displayed when [Administrator Settings] -> [Fax Settings] -> [Multi Line Settings] -> [Fax Line 2 to 4] -> [Multi Line Settings] -> [Line 2 to 4 Setting] is set to “TX and RX” or “TX Only”. |

| Key name | Function/Precondition | | |
|---|---|---|---|
| Fax Line 2<br>Fax Line 3<br>Fax Line 4 | Line Parameter Setting | Dialing Method | - |
| | | Number of RX Call Rings (Receive Time Interval Setting) | When [Service Mode] -> [FAX] -> [Line2 to 4] -> [Network] -> [Network Setting 1] -> [Receive Signal Detection Mode] is set to “Time”, [Receive Time Interval Setting] will be displayed. |
| | | Line Monitor Sound | - |
| | Function Settings | - | |
| | Multi Line Settings | - | |
| | Sender Fax No. | - | |

### (j) Network Fax Settings

| Key name | Function/Precondition |
|---|---|
| Black Compression Level | It will be displayed when either [IP Address Fax Function] or [Internet Fax Function] is set to “ON” in [Administrator Settings] -> [Network Settings] -> [Network Fax Settings] -> [Network Fax Function Settings]. |
| Color/Grayscale Multi-Value Compression Method | |
| Internet Fax Self RX Ability | It will be displayed when [Administrator Settings] -> [Network Settings] -> [Network Fax Settings] -> [Network Fax Function Settings] -> [Internet Fax Function] is set to “ON”. |
| Internet Fax Advanced Settings | |
| IP Address Fax Operation Settings | It will be displayed when [Administrator Settings] -> [Network Settings] -> [Network Fax Settings] -> [Network Fax Function Settings] -> [IP Address Fax Function] is set to “ON”. |

## (2) Administrator Settings > Fax Settings [2/2]




**NOTE**

- **Keys displayed on screens are different depending on the setting.**
- **It will be displayed when the optional fax kit FK-514 is mounted.**
- **For details of the utility functions, refer to "User's Guide."**

| Key name | Function/Precondition |
|---|---|
| Fax Print Quality Settings | - |

### 2.3.9 System Connection

**Administrator Settings > System Connection**

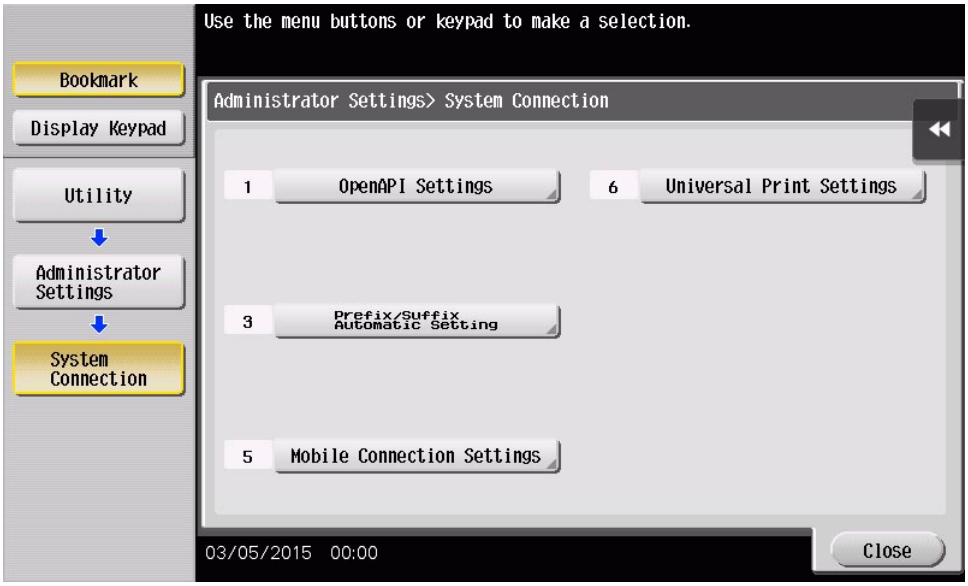


**NOTE**

- **Keys displayed on screens are different depending on the setting.**
- **For details of the utility functions, refer to "User's Guide."**

| Key name | Function/Precondition | | |
|---|---|---|---|
| OpenAPI Settings | Access Setting | - | |
| | SSL/Port Settings | - | |
| | Authentication | - | |
| | External Application Connection | - | |
| | Proxy Settings | - | |
| | Specified Application Start Setting | • It will be displayed when [Service Mode] -> [System 2] -> [Application Change Setting] is set to “Permit.”<br>• Setting the software switch No. 223 to HEX01 allows [Specified Application Start Setting] to be set to [Enable] with respect to the IWS application. *1 | |
| | Single Sign-On Setting | This displays when an authentication application is registered. | |
| Call Remote Center | For details of the functions, refer to "I.5.7 CS Remote Care (Outlines)". | | |
| Prefix/Suffix Automatic Setting | - | | |
| Mobile Connection Settings | Simple Connection Setting | QR Code Display Setting | - |
| | | Enable NFC | This setting is synchronized with [Administrator Settings] - [User Authentication/Account Track] -> [General Settings] -> [Enable NFC]. |
| | | Enable Bluetooth LE | • It will be displayed when the optional local interface kit EK-609 is mounted.<br>• This setting is synchronized with [Administrator Settings] - [User Authentication/Account Track] -> [General Settings] -> [Enable Bluetooth LE]. |
| | Wireless Connection Setting | This setting is available when [Simple Connection Setting] -> [QR Code Display Setting] is set to “ON.” | |
| | Default NFC Application Setting | - | |
| Universal Print Settings *2 | Store Print Documents Settings | This setting is disabled when the following settings are made in [Service Mode] -> [Network Settings] -> [2nd Network Setting] -> [Network Interface Settings]:<br>• Wired + Wireless (Secondary Mode)<br>• Wired + Wireless (Primary Mode)<br>• Wired + Wireless (Wi-Fi Direct) | |
| | Client Function Setting | - | |
| | Universal Print Group Setting | - | |

- *1: North America only.
- *2: This setting will be available when the optional i-Option LK-114 and upgrade kit UK-211 are enabled.

## 2.4 Administrator Settings List [2/2]

### Administrator settings outline 2/2

**NOTE**

- **The Administrator Settings will be available by entering the administrator password (16 digits) set by the Administrator Settings or Service Mode. (The administrator password is initially set to "1234567812345678.")**
- **When [Administrator Settings] -> [Security Settings] -> [Enhanced Security Mode] is set to "ON", entering the incorrect administrator password three times will cause access lock. The access lock is released after the lapse of a predetermined period of time (Default setting: 5 min.) after the main power switch is turned OFF and then ON more than 10 seconds later. The access lock can be released by [Service Mode] -> [Enhanced Security] -> [Administrator unlocking].**
- **For details of the utility functions, refer to "User's Guide."**

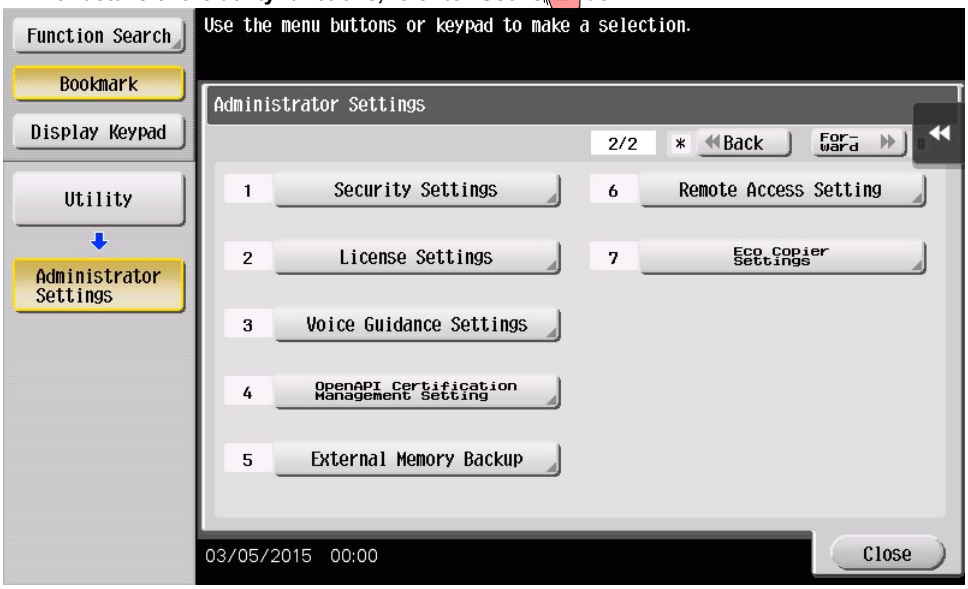


- Administrator Settings [1/2]
  - System Settings
  - Administrator/Machine Settings
  - One-Touch/User Box Registration
  - User Authentication/Account Track
  - Network Settings
  - Copier Settings
  - Printer Settings
  - Fax Settings
  - System Connection
- Administrator Settings [2/2]
  - Security Settings
  - License Settings
  - Voice Guidance Settings
  - OpenAPI Certification Management Setting
  - External Memory Backup
  - Remote Access Setting
  - Eco Copier Settings

### 2.4.1 Security Settings

#### (1) Administrator Settings > Security Settings [1/2]

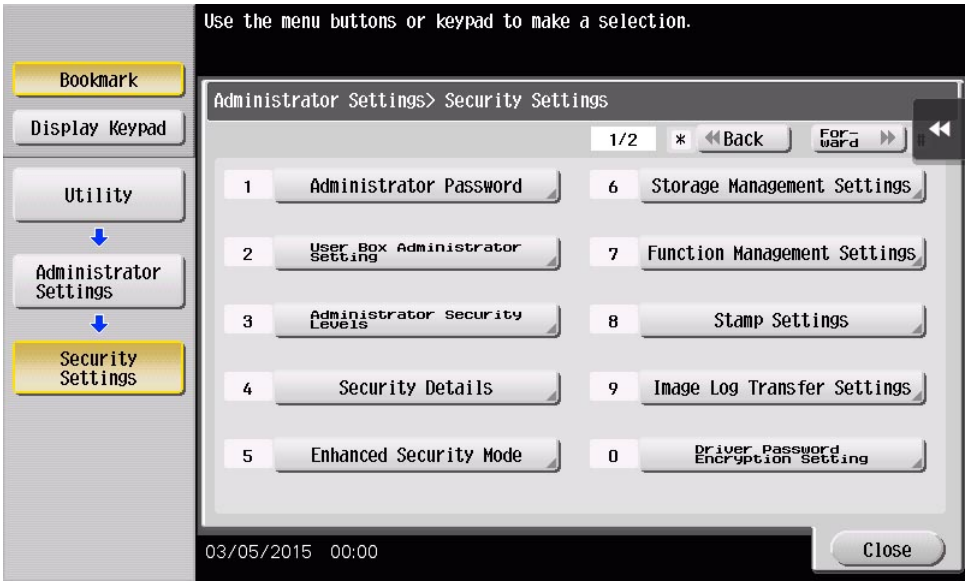

**NOTE**

- **Keys displayed on screens are different depending on the setting.**
- **For details of the utility functions, refer to "User's Guide."**

| Key name | Function/Precondition | |
|---|---|---|
| Administrator Password | When “Enable” is selected in [Administrator Settings] -> [Security Settings] -> [Security Details] -> [Password Rules], the following passwords cannot be accepted: password of single repeated characters, password same as the one before being changed, and password where the number of characters is less than the minimum number specified in [Set Minimum Password Length]. | |
| User Box Administrator Setting | • [Allow] cannot be selected when user authentication and account track are not conducted.<br>• If [Administrator Settings] -> [Security Settings] -> [Enhanced Security Mode] is set to “ON”, selecting “Allow” in this setting cancels enhanced security mode.<br>• When “Enable” is selected in [Administrator Settings] -> [Security Settings] -> [Security Details] -> [Password Rules], the following passwords cannot be accepted: password of single repeated characters, password same as the one before being changed, and password where the number of characters is less than the minimum number specified in [Set Minimum Password Length]. | |
| Administrator Security Levels | It will not be displayed when [Service Mode] -> [Billing Setting] -> [Management Function Choice] shows that the vendor 2 is mounted. | |
| Security Details | Password Rules | • [Enable] cannot be selected when [Service Mode] -> [Enhanced Security] -> [CE Authentication] is set to “OFF.” “OFF” setting of [CE Authentication] will not be displayed and cannot be set to “OFF” when [Password Rules] is set to “Enable.”<br>• If [Administrator Settings] -> [Security Settings] -> [Enhanced Security Mode] is set to “ON”, selecting “Disable” in this setting cancels enhanced security mode.<br>• When the password rule is set to [Enable], the password cannot be changed or registered unless it follows the above conditions. |
| | Prohibited Functions When Authentication Error | • If [Administrator Settings] -> [Security Settings] -> [Enhanced Security Mode] is set to “ON”, selecting “Mode 1” in this setting cancels enhanced security mode. Only the number of times for trials up to the access lock can be changed.<br>• For details of the functions, refer to "I.2.11.12 Security Settings - Prohibited Functions When Authentication Error." |
| | Confidential Document Access Method | It cannot be changed at the operator’s option since it will automatically be set according to the [Prohibited Functions When Authentication Error] setting.<br>• It will be set to [Mode 1] when [Prohibited Functions When Authentication Error] is set to [Mode 1].<br>• It will be set to [Mode 2] when [Prohibited Functions When Authentication Error] is set to [Mode 2]. |
| | Manual Destination Input | - |
| | Print Data Capture | • To be used when carrying out [Service Mode] -> [System 2] -> [Data Capture].<br>• If [Administrator Settings] -> [Security Settings] -> [Enhanced Security Mode] is set to “ON”, selecting “Allow” in this setting cancels enhanced security mode. |
| | Job Log Settings | When “ON” is selected in [Administrator Settings] -> [Security Settings] -> [Enhanced Security Mode], this setting is automatically set to “Yes.” |
| | Restrict Fax TX | - |
| | Address Selection Confirmation Display | It will be displayed when [Administrator Settings] -> [System Settings] -> [Restrict User Access] -> [Restrict Operation] -> [Restrict Broadcasting] is set to “OFF.” |
| | Personal Data Security Settings | - |
| | Hide Personal Information (MIB) | If [Administrator Settings] -> [Security Settings] -> [Enhanced Security Mode] is set to “ON”, selecting “OFF” in this setting cancels enhanced security mode. |
| | Display Activity Log | - |
| | Initialize | - |
| | Secure Print Only | - |
| | Copy Guard | It will be displayed when the optional security kit SC-508 is mounted. |
| | Password Copy | |
| | Web browser contents access | • It will be displayed when an extended function of the web browser via OpenAPI application is enabled.<br>• When using the application where server authentication is carried out by web browser extensions, [Allow] is automatically selected. |
| | TX Operation Log | To print the saved sending operation logs or save them in USB memory, select [Utility] -> [Administrator Settings] -> [System Settings] -> [List/Counter] -> [TX Operation Log Output] on the Control Panel. |
| | Hardware Encryption | - |
| | Export Debug Log | • This is displayed when Switch No. “155” is set to “01” in HEX Assignment in [Service Mode] -> [System 2] -> [Software Switch Setting].<br>• Use: To select whether or not allow CE to export debug information (logs) from the MFP to use the information to analyze problem in the MFP.<br>• Default setting: Restrict |
| | Write the Configuration from USB | - |

| Key name | Function/Precondition | |
|---|---|---|
| | Storage data backup | • To set whether to permit our service representative to back up or restore the storage on this machine.<br>• For details of the functions, refer to [Service Mode] -> [Enhanced Security] -> [HDD Data Backup]. |
| Enhanced Security Mode | Enhanced Security Mode | For details of the functions, refer to "I.2.11.13 Security Settings - Enhanced Security Mode." |
| Storage Management Settings | Check Capacity | - |
| | Overwrite HDD Data | It is necessary to make HDD format when encryption priority/overwrite priority setting is changed. Make sure to configure the following settings after formatting the HDD.<br>• Installing the firmware.<br>• Reinstall movie data, voice data, OCR dictionary data, and PDF/A fonts from [Service Mode] -> [System 2] -> [Install Data]. |
| | Overwrite All Data | - |
| | Overwrite All Data-Report Settings | - |
| | HDD Lock Password | • Don't forget the password.<br>• After setting a lock password, if you replace the HDD due to its breakage or other reasons and install a new HDD, an error message is displayed. In that case, clear the HDD lock password and set a new password using this function. |
| | Format | • It is subject to logical formatting here, therefore if starting with physical formatting, follow as [Service Mode] -> [State Confirmation] -> [Memory/Storage Adjustment] -> [Format].<br>• Make sure to configure the following settings after formatting the HDD.Installing the firmware. Next, reinstall movie data, voice data, OCR dictionary data, and PDF/A fonts from [Service Mode] -> [System 2] -> [Install Data].<br>• Make sure to install the firmware after the format of the hard disk. Otherwise a trouble code “C-D012 mount error due to unformatted HDD” will appear. |
| | HDD Encryption Setting | For details of the functions, refer to "I.2.11.14 Security Settings - HDD Encryption Setting." |
| | Debug Log Encryption Settings | • Use: To set a password used to encrypt debug data when storing it into the HDD.<br>• Default setting: 01234567890123456789<br>• For details of the functions, refer to "I.2.11.15 Security Settings - Debug Log Encryption Settings." |
| Function Management Settings | Usage Setting for Each Function | It will be displayed when [Service Mode] -> [Billing Setting] -> [Management Function Choice] shows that vendor 2 or management device 2 is mounted. |
| | Maximum Job Allowance | |
| | Network Function Usage Settings | When the vendor or management device setting in the Service Mode is set, this setting is set to “OFF.” Exercise caution since it will stay in “OFF” setting even when “unset” is selected on vendor or management device setting in Service Mode later. |
| Stamp Settings | Apply Stamps | - |
| | Delete Registered Stamp | - |
| Image Log Transfer Settings | • This is displayed only when Switch No. “63” is set to [00000001] at Bit assignment/[01] at HEX assignment (Type 1) or [00000010] at Bit assignment/[02] at HEX assignment (Type 2) in [Service Mode] -> [System 2] -> [Software Switch Setting].<br>• For details of the functions, refer to [I.2.11.16 Security Settings - Image Log Transfer Settings (Type1).]<br>• For details of the functions, refer to [I.2.11.17 Security Settings - Image Log Transfer Settings (Type2).] | |
| Driver Password Encryption Setting | For details of the functions, refer to [I.2.11.18 Security Settings - Driver Password Encryption Setting.] | |

### (2) Administrator Settings > Security Settings [2/2]




**NOTE**

- **Keys displayed on screens are different depending on the setting.**
- **For details of the utility functions, refer to "User's Guide."**

| Key name | Function/Precondition |
|---|---|
| FIPS Settings | - |
| Maintenance Mode Access | To enable Maintenance Mode Access, set [Maintenance Mode] of Service Mode to [Effective].<br>[Service Mode] -> [System 2] -> [Maintenance Mode] |
| Quick Security Setting | For details of the functions, refer to Quick Security setting. |

## 2.4.2 License Settings

### Administrator Settings > License Settings

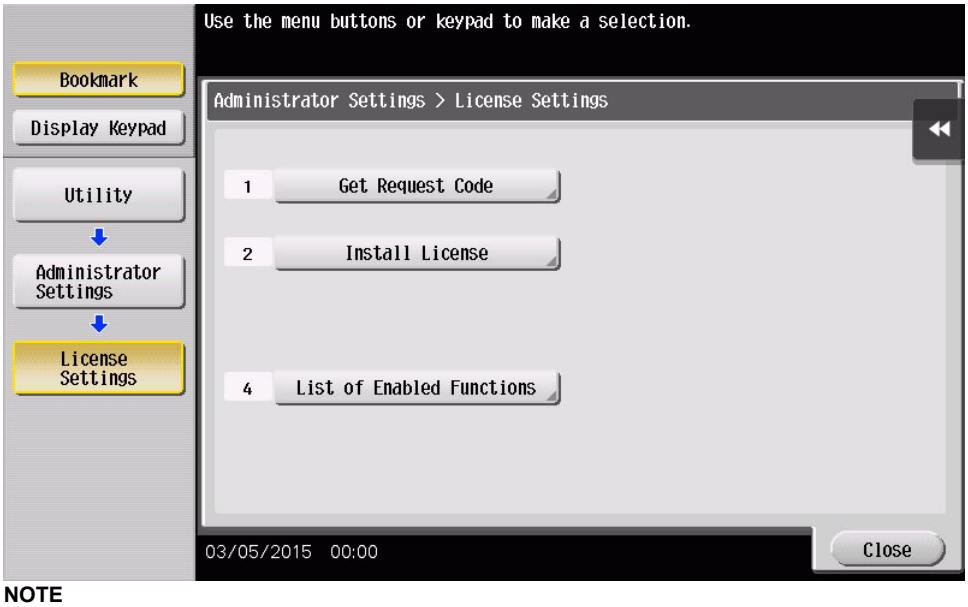


**NOTE**

- **Keys displayed on screens are different depending on the setting.**
- **For details of the utility functions, refer to "User's Guide."**

| Key name | Function/Precondition |
|---|---|
| Get Request Code | - |
| Install License | • By making settings in [Service Mode] -> [Billing Setting], CE can also activate functions provided by i-Option.<br>• When activating i-Option, MFP accesses to KM license server via WebDAV connection. Set the proxy server setting in [Administrator Settings] -> [Network Settings] -> [WebDAV Settings] -> [Proxy Setting for Remote Access] as occasion demands.<br>• For accessing to KM license server, it is necessary to select “Fixed Address” in [Service Mode] -> [Billing Setting] -> [WebDAV Server Setting].<br>• For details of the functions, refer to I.2.11.24 License Settings. |
| List of Enabled Functions | It is displayed when this machine is equipped with an optional upgrade kit UK-211. |

### 2.4.3 Voice Guidance Settings

**NOTE**

- **Keys displayed on screens are different depending on the setting.**
- **For details of the utility functions, refer to "User's Guide."**

| Key name | Function/Precondition |
|---|---|
| Voice guidance | • To use voice guidance, the optional upgrade kit UK-211 and i-Option LK-104 v3 must be activated, and the optional local interface kit EK-608 or EK-609 must be mounted.<br>• For details of the functions, refer to I.2.11.25 Voice Guidance Settings-Voice Guidance. |

### 2.4.4 OpenAPI Certification Management Setting

**Administrator Settings > OpenAPI Certification Management Setting**

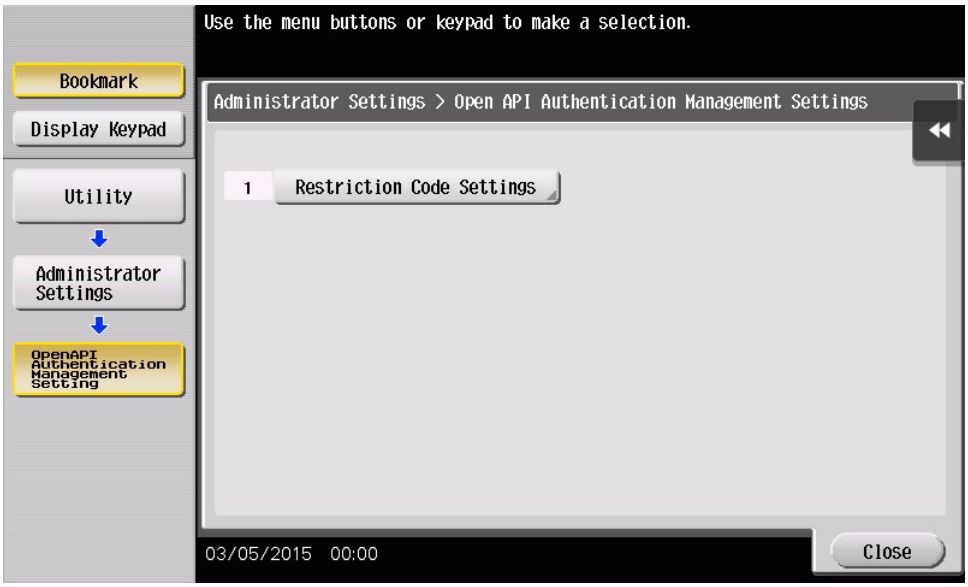


**NOTE**

- **Keys displayed on screens are different depending on the setting.**
- **For details of the utility functions, refer to "User's Guide."**

| Key name | Function/Precondition |
|---|---|
| Restriction Code Settings | These are communication settings for the application which is developed by the third vendor. Do not set or change these settings without vendor's instructions. |

### 2.4.5 External Memory Backup

**Administrator Settings > External Memory Backup**

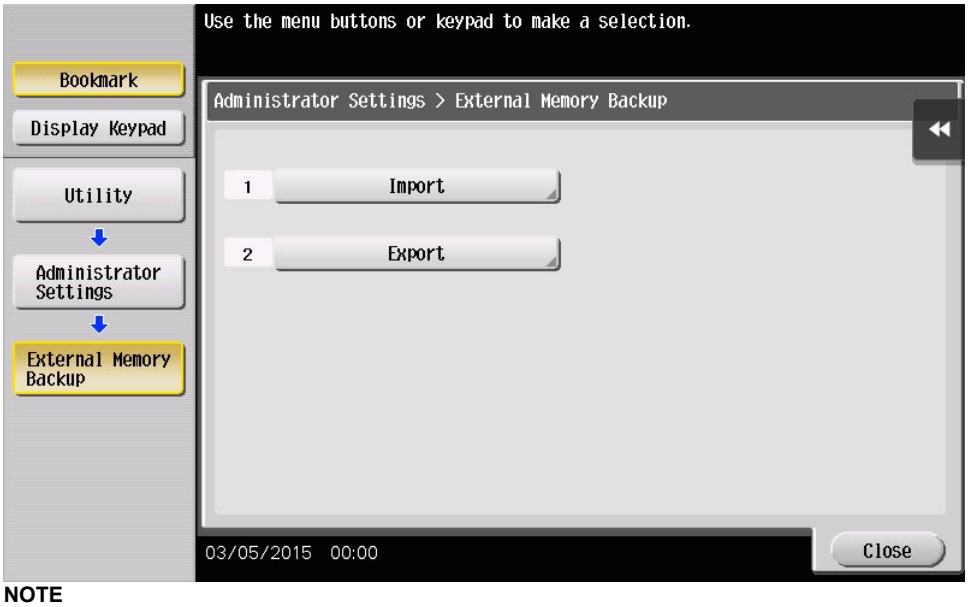


**NOTE**

- **Keys displayed on screens are different depending on the setting.**

| Key name | Function/Precondition |
|---|---|
| Import | • It will be displayed when [Service Mode] -> [System 2] -> [Software Switch Setting] shows that switch No.72 is set to [00000100] at Bit assignment/[04] at HEX assignment.<br>• For details of the functions, refer to "I.2.11.26 External Memory Backup - Import/Export". |
| Export | |

### 2.4.6 Remote Access Setting

**NOTE**

- **Keys displayed on screens are different depending on the setting.**
- **For details of the utility functions, refer to "User's Guide."**

| Key name | Function/Precondition | |
|---|---|---|
| Import/Export User Data | Allow | This displays when using the CS Remote Care system. |
| | Restrict | |

### 2.4.7 Eco Copier Settings

**NOTE**

- **Keys displayed on screens are different depending on the setting.**
- **For details of the utility functions, refer to "User's Guide."**

| Key name | Function/Precondition |
|---|---|
| Eco Copier Settings | - |

## 2.5 Administrator Shortcut Settings

**NOTE**

- **Keys displayed on screens are different depending on the setting.**
- **For details of the utility functions, refer to "User's Guide."**

### 2.5.1 Administrator Shortcut Settings [1/2]

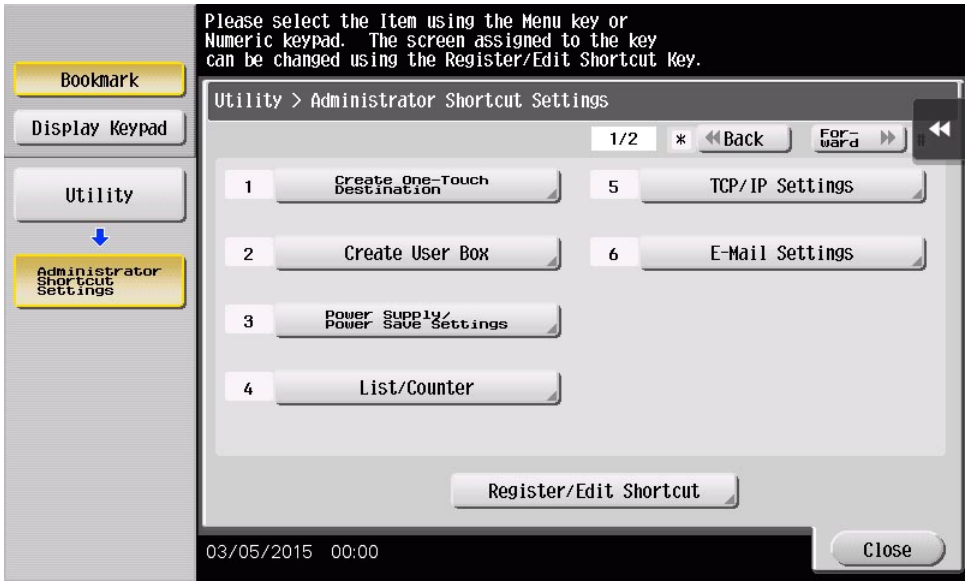


| Key name | Function/Precondition |
|---|---|
| Create One-Touch Destination | The default setting for short cut keys 7/8 is "Do Not Use". |
| Create User Box | |
| Power Supply/Power Save Settings | |
| List/Counter | |
| TCP/IP Settings | |
| E-Mail Settings | |

### 2.5.2 Administrator Shortcut Settings [2/2]

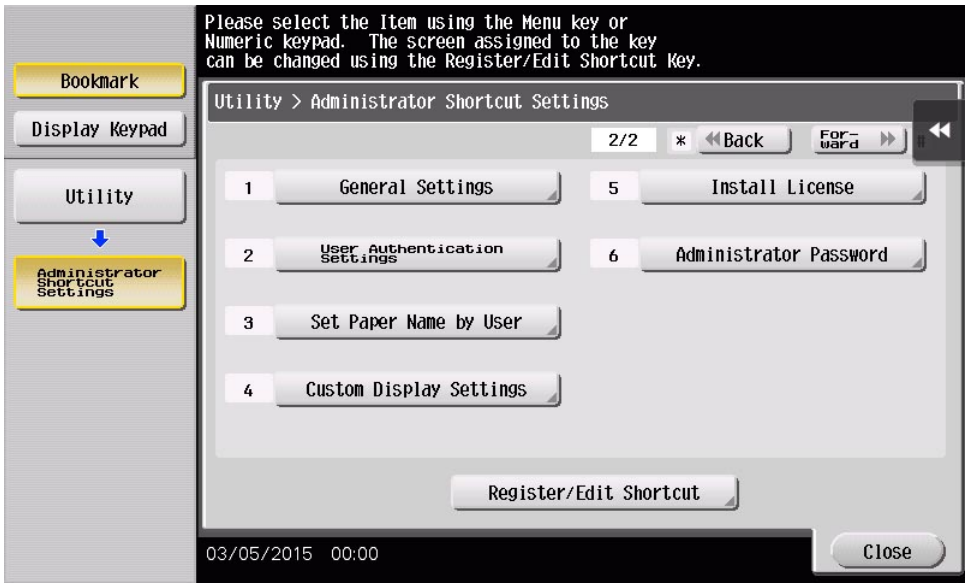


| Key name | Function/Precondition |
|---|---|
| General Settings | The default setting for short cut keys 15/16 is "Do Not Use". |
| User Authentication Settings | |
| Set Paper Name by User | |
| Custom Display Settings | |
| Install License | |
| Administrator Password | |

## 2.6 Check Consumables List

**NOTE**

- **Keys displayed on screens are different depending on the setting.**
- **For details of the utility functions, refer to "User's Guide."**

### 2.6.1 Check Consumable Life [1/2]

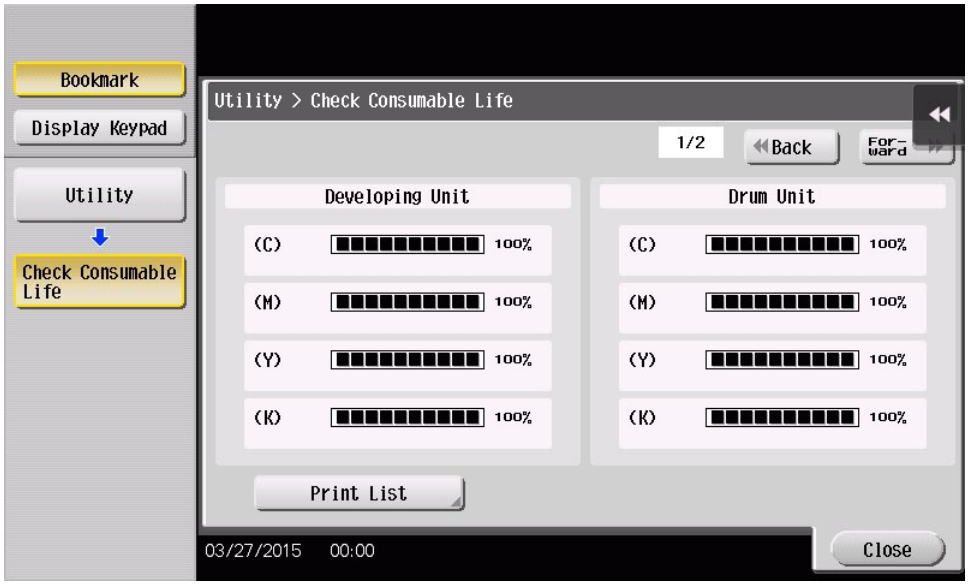


| Unit Name |
|---|
| Developing Unit |
| Drum Unit |

### 2.6.2 Check Consumable Life [2/2]

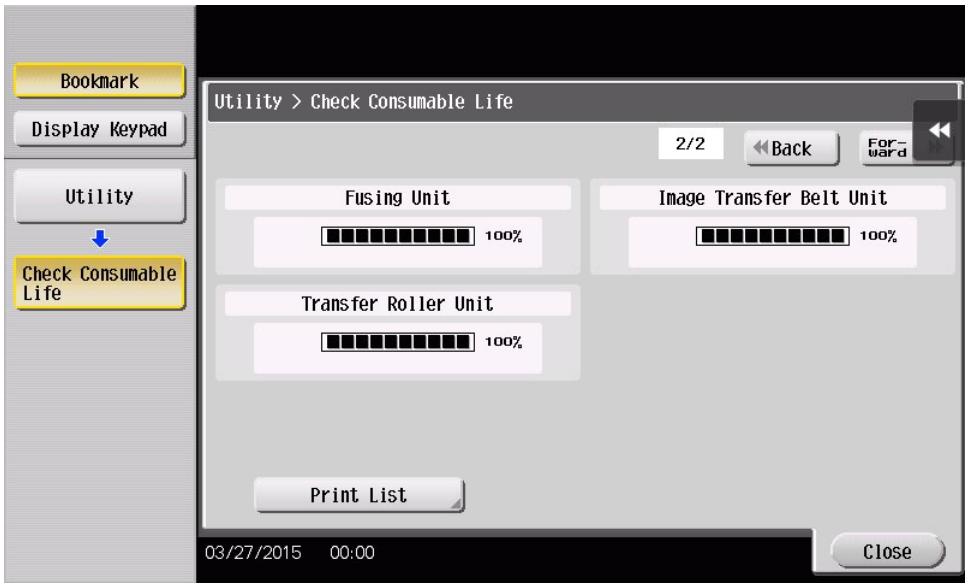


| Unit Name |
|---|
| Fusing Unit |
| Transfer Roller Unit |
| Image Transfer Belt Unit |

## 2.7 Banner Printing

**NOTE**

- **Keys displayed on screens are different depending on the setting.**
- **For details of the utility functions, refer to "User's Guide."**

| Function Name | Function/Precondition |
|---|---|
| Allow | - |
| Restrict | - |

## 2.8 My Panel Settings

**NOTE**

- **Keys displayed on screens are different depending on the setting.**

| Function Name | Function/Precondition |
|---|---|
| Language Setting | • It is displayed when the optional upgrade kit UK-211 is validated and PageScope My Panel Manager is installed.<br>• This is displayed when a registered user is logging in after user authentication. However, this is not displayed when both management device 2 and user authentication are used.<br>• Use : To make various settings about My Panel. To customize My Panel screen for individual registered users.<br>• Registering, editing, and deleting My Panel settings are allowed when logging in as a registered user.<br>• When My Panel is not customized, the settings for machine take effect in the three of the control panel settings, Language setting, Measurement unit setting, and Color selection setting.<br>• Depending on the functions provided by each machine and the optional device configuration, not all My Panel settings may not take effect. |
| Measurement Unit Setting | |
| Copier Settings | |
| Scan/Fax Settings | |
| User Box Settings | |
| Function Display Key (Copy/Print) | |
| Function Display Key (Send/Save) | |
| Main Menu Settings | |
| Initial Screen Setting | |

## 2.9 Device Information List

**NOTE**

- **Keys displayed on screens are different depending on the setting.**
- **For details of the utility functions, refer to "User's Guide."**

### 2.9.1 Device Information [1/2]




| Function Name |
|---|
| Function Version |
| IPv4 Address |
| IPv6 Address |
| Serial Number |
| Contact Telephone Number |

### 2.9.2 Device Information [2/2]




| Function Name |
|---|
| Contact Fax Number |
| Version Information |

## 2.10 Remote Panel Operation List

**NOTE**

- **Keys displayed on screens are different depending on the setting.**
- **For details of the utility functions, refer to "User's Guide."**

| Key name | Function/Precondition |
|---|---|
| Start | • It will be displayed when [Administrator Settings] -> [Network Settings] -> [Remote Panel Settings] -> [Client Settings] is set to “ON.”<br>• To start remote operations of the control panel of the machine. |

## 2.11 Supplementary explanation of utility mode

### 2.11.1 User Authentication/Account Track-Authentication Device Settings

- It will be displayed when [Service Mode] -> [Billing Setting] shows that the authentication device 2 is mounted.

- It will be displayed when [Administrator Settings] -> [Network Settings] -> [IWS Settings] is set to “ON.”

### (1) General Settings

#### (a) Use

- Specifies a device used for user authentication.

| | | | |
|---|---|---|---|
| Card Authentication | IC Card type setting | Select the type of the required IC card.<br>• To use the FeliCa card, select [FeliCa], [SSFC], [FCF], or [FCF (Campus)]. When [SSFC] is selected, detailed information such as the company code or company identification code is registered.<br>• To use the Type A card, select [Type A].<br>• To use the FeliCa and Type A cards together, select [FeliCa+TypeA], [SSFC+TypeA], [FCF +Type A], or [FCF(Campus)+Type A]. When [SSFC+TypeA] is selected, detailed information such as the company code or company identification code is registered.<br>• To use NFC, select [NFC(HCE)].<br>• To use the Type A card with NFC, select [TypeA+NFC(HCE)].<br>• To use the FeliCa card with NFC, select [FeliCa+NFC(HCE)], [SSFC+NFC(HCE)], [FCF +NFC(HCE)], or [FCF(Campus)+NFC(HCE)]. When [SSFC+NFC(HCE)] is selected, detailed information such as the company code or company identification code is registered. | |
| | | Card Detail Settings | The settings information of for the registered IC card loadable driver can be changed via the Web browser on the machine. This does not display if any of the following conditions are satisfied.<br>• A driver other than the AU-201S loadable driver is installed. |
| | IC Card Type | The type of the IC card which has been set will be displayed.<br>• This is displayed when the loadable driver used for the YSoft card reader has been installed. | |
| | Operation Settings | Set how to log in to this machine.<br>• [Card Authentication]: Pass the IC card over the authentication unit to log in.<br>• [Card Authentication + Password]: Pass the IC card over the authentication unit, and enter the password to log in.<br>[Card Authentication] is specified by default. | |
| | Authentication Card ID Number | • Specify whether to notify the counter, which collects the use status of this machine, of the authentication card ID.<br>• [Ignore] is specified by default. | |
| Bio Authentication | Beep Sound | • Set whether to give a "blip" sound when the finger vein pattern is scanned successfully.<br>• [ON] is specified by default. | |
| | Operation Settings | Set how to log in to this machine.<br>• [1-to-many authentication]: A user simply needs to place his or her finger to log in.<br>• [1-to-1 authentication]: A user needs to enter the user name and place his or her finger to log in.<br>[1-to-many authentication] is specified by default. | |

#### (b) Procedure

- Select either one of the authentication devices and press the corresponding key to go to the individual operation setting screen.
- The screen displays the authentication device that is selected in [Service Mode] -> [Billing Setting] -> [Authentication Device 2].
- If SSFC (Shared Security Formats Cooperation) is selected in Card Authentication, set [Company Code], [Company Identification Code], [Area No.], [Building No.], [Floor No.], [Room No.], and [Security Level].

#### (c) Setting items for SSFC card information

- When using SSFC card, acquire the following information from the administrator and convert the value to input using the control panel.

| Information to be obtained from the administrator | | |
|---|---|---|
| Items of Felica SSFC detail setting | Sample-data (decimal number) | Setting value (hexadecimal number) |
| Room number | 37 | 00 25 |
| Floor number | 15 | 00 0F |
| Building number | 50 | 00 32 |
| Area number | 85 | 00 55 |
| Security level | 2 | 00 02 |
| Company identification code (CL code) *1 | 06BGLQVX17 (ASCII code) | 30 36 42 47 4C 51 56 58 31 37 |
| Company code *2 | CompanyA (ASCII code) | CompanyA |

*1: The character length of the company code is 10 bytes.
*2: Use alphabetical upper case/lower case characters and numeric characters for Company code. When the company code is not set, this space will be left blank.

### (2) Logoff Settings

#### (a) Use

- Select whether or not the user is logged off after a scan or fax is sent or after the copy document is scanned.

#### (b) Default setting

- Do not log off

#### (c) Setting item

- Do not log off
- Log off

### 2.11.2 Network Settings-Network Fax Settings

- It will not be displayed on the screen when all items are set to “OFF” in [Service Mode] -> [System 2] -> [Network Fax Settings].

#### (1) Network Fax Function Settings

##### (a) IP Address Fax Function

- Setting will be available when [IP Address Fax] is set to “ON” in [Service Mode] -> [System 2] -> [Network Fax Settings].

###### (a) Use

- To set whether or not to use IP address fax function.

###### (b) Default setting

- OFF

###### (c) Setting item

- ON
- OFF

##### (b) Internet Fax Function

- Setting will be available when [Internet Fax] is set to “ON” in [Service Mode] -> [System 2] -> [Network Fax Settings].

###### (a) Use

- To set whether or not to use Internet fax function.

###### (b) Default setting

- OFF

###### (c) Setting item

- ON
- OFF

#### (2) SMTP TX Settings

##### (a) Use

- To set SMTP TX when network fax function is being used.
- To set SMTP TX port number and connecting time out period when network fax function is being used.

##### (b) Port No.

###### (a) Procedure

1. Touch [Input].
2. Enter the port number between 1 and 65535 using the 10-key pad.

##### (c) Connection Timeout

###### (a) Procedure

1. Touch [Input].
2. Enter the connection timeout time between 5 and 1000 (sec.) using the 10-key pad.

#### (3) SMTP RX Settings

##### (a) Use

- To set SMTP RX when network fax function is being used.
- To set SMTP RX port number and connecting time out period when network fax function is being used.

##### (b) SMTP RX

###### (a) Default setting

- OFF

###### (b) Setting item

- ON
- OFF

#### (c) Port No.

##### (a) Procedure

1. Touch [Input].
2. Enter the port number between 1 and 65535 using the 10-key pad.

#### (d) Connection Timeout

##### (a) Procedure

1. Touch [Input].
2. Enter the connection timeout time between 5 and 1000 (sec.) using the 10-key pad.

### 2.11.3 Network Settings-Network I/F Configuration

- It will be displayed when the optional upgrade kit UK-212 is mounted.

#### (1) Use

- To add a network interface to this machine, set a network interface configuration.

| | |
|---|---|
| Wired Only | Select this option to use this machine only in the wired LAN environment. |
| Wireless Only | Select this option to use this machine only in the wireless LAN environment. This machine runs as a wireless LAN adapter in the wireless LAN environment. |
| Wired + Wireless (Secondary Mode) | Select this option to use this machine in both the wired LAN environment and wireless LAN environment. This machine runs as a wireless LAN adapter in the wireless LAN environment. |
| Wired + Wireless (Primary Mode) | Select this option to use this machine in both the wired LAN environment and wireless LAN environment. This machine runs as a wireless LAN access point in the wireless LAN environment. |
| Wired + Wireless (Wi-Fi Direct) | Select this option to use this machine in both the wired LAN environment and wireless LAN environment. This machine runs as a group owner of Wireless LAN Direct in the wireless LAN environment. |

#### (2) Default setting

- Wired Only

### 2.11.4 Network Settings-Wireless Network Setting

- Configure settings to use this machine as a wireless LAN access point or wireless LAN adapter.
- It will be displayed when the optional upgrade kit UK-212 is mounted.

#### (1) Use

##### (a) [Wireless Only] or [Wired + Wireless (Secondary Mode)]

- [Wireless Only] or [Wired + Wireless (Secondary Mode)] is selected in [Administrator Settings] -> [Network Settings] -> [Network I/F Configuration]

| | |
|---|---|
| Awake from ErP | Select the method to return the machine from the ErP Auto Power Off mode.<br>• [OFF]: The machine is not returned from the ErP Auto Power Off mode.<br>• [Awake with Magic Packet]: The machine returns from the ErP Auto Power Off mode when receiving a magic packet.<br>• [Awake with ARP + Unicast Communication]: The machine returns from the ErP Auto Power Off mode when receiving a unicast communication packet.<br>[Awake with Magic Packet] is specified by default. |
| Easy Setting (WPS) | Configure a setting to automatically obtain connection information from an access point. The access point must support the WPS function.<br>• [Push Button Method]: Select [Push Button Method], and touch [Start Operation] to try a connection with an access point. If you press the WPS setting button at the access point, settings such as SSID and security required for a connection are configured automatically.<br>• [PIN Method]: Select [PIN Method], and tap [Start Operation] to display the PIN code. If you enter the displayed PIN code at the access point, settings such as SSID and security required for a connection are configured automatically. This function requires a computer that contains Windows 7 or later as the operating system. |
| Manual Setting | Manually configure settings items such as SSID and the encryption scheme that are required for a connection.<br>• [SSID]: Enter the SSID of the wireless LAN access point connected to the machine (using up to 32 characters).<br>• [40 to 20 MHz Auto Switch]: Select [ON] to try a high-speed communication with 40MHz. [OFF] is specified by default.<br>• [Authentication/Encryption Algorithm]: Select the algorithm used for authentication or encryption.<br>If [WEP] is selected, specify [Key Input Method] and [WEP Key]. To specify multiple WEP keys, select the required WEP keys in [Use key settings].<br>If an algorithm other than WEP is selected, specify [Key Input Method] and [Passphrase]. |
| Connection Status | Allows you to check the access point connected to this machine, the radio field intensity of the access point, and the current communication speed. |

| | |
|---|---|
| Device Setting | Allows you to check the MAC address of the wireless network adapter. |

### (b) [Wired + Wireless (Primary Mode)] or [Wired + Wireless (Wi-Fi Direct)]

- [Wired + Wireless (Primary Mode)] or [Wired + Wireless (Wi-Fi Direct)] is selected in [Administrator Settings] -> [Network Settings] -> [Network I/F Configuration]

| | |
|---|---|
| Awake from ErP | Select the method to return the machine from the ErP Auto Power Off mode.<br>• [OFF]: The machine is not returned from the ErP Auto Power Off mode.<br>• [Awake with Magic Packet]: The machine returns from the ErP Auto Power Off mode when receiving a magic packet.<br>• [Awake with ARP + Unicast Communication]: The machine returns from the ErP Auto Power Off mode when receiving a unicast communication packet.<br>[Awake with Magic Packet] is specified by default.<br>Set [Awake with ARP + Unicast Communication] for this function. |
| AP Mode Setting | Manually configure settings to use this machine as a wireless LAN access point.<br>• [SSID]: Enter the SSID of this machine (using up to 32 bytes). When [Wired + Wireless (Primary Mode)] is selected in [Network I/F Configuration], the SSID of the access point is used. When [Wired + Wireless (Wi-Fi Direct)] is selected in [Network I/F Configuration], the SSID for Wi-Fi Direct connection is used. The SSID specified here is displayed on the Wi-Fi Direct (setting) screen of the terminal compatible with Wi-Fi Direct. If you cannot connect to this machine by specifying the SSID on the Wi-Fi Direct (setting) screen, specify [Virtual SSID] on the Wi-Fi (setting) screen to make a connection.<br>• [40 to 20 MHz Auto Switch]: Select [ON] to try a high-speed communication with 40 MHz. [OFF] is specified by default.<br>• [Authentication/Encryption Algorithm]: Select the algorithm used for authentication or encryption. [No Authentication/Encryption] is specified by default.<br>Specify [Key Input Method] and [WEP Key] when [WEP] is selected in [Authentication/Encryption Algorithm]. To specify multiple WEP keys, select the required WEP keys in [Use key settings]. When [Wired + Wireless (Wi-Fi Direct)] is selected in [Network I/F Configuration], [WEP] is not available.<br>When an algorithm other than [WEP] or [No Authentication/Encryption] is selected in [Authentication/Encryption Algorithm], specify [Key Input Method] and [Passphrase]. Also, specify whether to automatically update the passphrase in [Passphrase Auto Update]. To automatically update the passphrase, enter its update interval. |
| Wireless Channel | Set a wireless channel to be used by the access point. Selecting [Auto] searches for a channel that is not being used for other access points, and automatically assigns it to the access point. [Auto] is specified by default. |
| ANY connection | Select whether to allow ANY connection. If [Restrict] is selected, the SSID cannot be detected automatically as an access point in the wireless LAN adapter side. [Allow] is specified by default.<br>This option is displayed only when [Wired + Wireless (Primary Mode)] is selected in [Network I/F Configuration]. |
| MAC Address Filtering | Restricts wireless LAN adapters that can be connected to the access point using the MAC address. Enter the MAC addresses of wireless LAN adapters that can be connected to the access point. MAC addresses of up to 16 devices can be registered.<br>This option is displayed only when [Wired + Wireless (Primary Mode)] is selected in [Network I/F Configuration]. |
| DHCP Server Settings | Configure a setting to use the DHCP server function.<br>• [Enable Settings]: Select whether to enable the DHCP server function. [Disabled] is specified by default.<br>• [IPv4 lease address]: Specify the range of IPv4 addresses to be leased from the DHCP server when enabling the DHCP server function.<br>• [Subnet Mask]: Specify the subnet mask of the IPv4 address to be leased from the DHCP server when enabling the DHCP server function.<br>• [Lease Period]: Specify the lease period of the IPv4 address to be leased from the DHCP server when enabling the DHCP server function. |
| No. of Concurrent Devices Allowed | Enter the number of devices that can be connected simultaneously to the access point. [5] devices is specified by default. |
| Signal Strength Setting | Select the radio field intensity of the access point from three levels (Low, Middle, and High). [High] is specified by default. |
| Device Setting | Allows you to check the MAC address of the wireless network adapter. |
| Display Connected Devices | Displays a list of names and MAC addresses of wireless LAN adapters that are connected to the access point. |
| Virtual SSID | Displays the automatically generated virtual SSID. This option is available when a terminal incompatible with Wi-Fi Direct is connected to this machine. A virtual SSID is displayed on the Wi-Fi (setting) screen of a terminal incompatible with Wi-Fi Direct. The virtual SSID is displayed with "DIRECT-XXXXXX" ("XXXXXX" indicates a combination of the random alphanumeric characters and the specified value of [SSID]).<br>This option is displayed when [Wired + Wireless (Wi-Fi Direct)] is selected in [Network I/F Configuration]. |

### 2.11.5 Network Settings-IWS Settings

**NOTE**

- **It will be displayed when [Administrator Settings] -> [Security Settings] -> [FIPS Settings] is set to "Disable."**

#### (1) Use

- To configure the settings of the WebDAV server which is used to transfer data in the IWS (Internal Web Server) function.

#### (2) Default setting

- OFF

#### (3) Setting item

- ON
- OFF

#### (4) Procedure

- When selecting [ON], configure the following settings.

1. Set the port number in [Port Number] (Web Server/Application Installation) using the 10-key pad.
2. Set Allow/Restrict for the connection of application in [Connect IWS Apps to Network].
3. Select whether to allow an external application to operate the IWS application on this machine in [Permit Access for Communication between the applications].
4. Select whether to notify you of the user name and password of the user who is using this machine, when the IWS application on this machine operates that of a different device in [Login Information Notification Settings].
5. The following settings are available when the IWS application has been registered.
   - Print Data Conversion Setting: Select a print data conversion application.
   - Authentication Screen Setting: Select an authentication screen application.
   - Background Application Setting: Select a background application.
   - Application List: Display the list of the registered applications (up to 50 applications)
   - Administrator password change from IWS application: Select whether to allow change of the user administrator password from the IWS application (default: Disable).

     **NOTE**
     - **This function is available only when [HEX 01] is selected in: [Service Mode] -> [System 2] -> [Software SW No. 223].**
     - **North America only.**

### 2.11.6 Network Settings - Remote Panel Settings (outline)

- It will not be displayed when [Service Mode] -> [Enhanced Security] -> [CE Authentication] is set to "OFF."
- Issue and install the self-signed certificate from Device Certificate Setting under Security Setting of PageScope Web Connection.
- Enable CE Password.
- The control panel of this machine can be operated remotely from a computer on the network.
- During remote operations, display on the control panel can be masked to thereby lock the operation on the machine side (the machine control panel is forced into the locked state when the machine is set into the service mode through remote operation).
- The control panel can also be unlocked through remote operation. The machine control panel is enabled when unlocked remotely.
- Operations performed through the machine control panel while it is in the unlocked state can be reflected in the remote panel side.
- The remote operations are disabled under the following conditions:
  - Service mode operations are being performed on the machine.
  - Remote operations are already performed from another PC.

#### (1) Methods of the Remote panel

- The following two methods are available for operating the control panel.

| | |
|---|---|
| Using the dedicated software | • This method uses the dedicated software that collects screen information of the control panel of this machine periodically, and operates the control panel from a computer on the network.<br>• You must prepare a dedicated remote control software program and server. Despite the burden, this method enables you to control the machine remotely even from a computer located outside the router network. |
| Accessing the machine directly | • This method accesses this machine directly from another computer on the network, and operates the control panel of the machine using a Web browser.<br>• A dedicated remote control software program is not required, but the computer used for the remote control must be able to access this machine. |

### 2.11.7 Network Settings - Remote Panel Settings (Server Settings)

#### (1) Use

- To access this machine directly and control the control panel of the machine remotely, select [ON].

#### (2) Default setting

- OFF

#### (3) Setting item

- ON
- OFF

#### (4) Procedure

- If [ON] is selected, configure the following settings.

##### (a) <Server Settings - Password Authentication>

- Select whether to request password entry for connecting with this machine. To request for a password entry, select [Yes], and enter the password (using up to 64 characters).

##### (b) <Server Settings - IP Filtering (Permit Access)>

- Select [Enable] to specify IP addresses allowed to access. Also enter the range of IP addresses allowed to access.

##### (c) <Port Number>

- To set the port number.

**NOTE**
**Starting the remote operations**
**Access the machine web server (URL: https://IP_address_of_MFP:Port_Number/panel/top.html) through the web browser.**

- **If Password Authentication is set, enter the set password.**
- **If IP Filtering is enabled, connection can be established only through the authorized address.**

### 2.11.8 Network Settings - Remote Panel Settings (Client Settings)

#### (1) Use

- To control the control panel of this machine remotely using the dedicated software, select [ON].

#### (2) Default setting

- OFF

#### (3) Setting item

- ON
- OFF

#### (4) Procedure

- If [ON] is selected, configure the following settings.

##### (a) <Port No.>

- To set the port number.

##### (b) <Connection Timeout>

- To set the time-out time. (60 Second is specified by default)

##### (c) <Server Address>

- Enter the address of the server where the dedicated software was installed.

##### (d) <Certificate Verification Level Settings>

- To verify the server certificate, configure settings to verify the certificate.

| | |
|---|---|
| Expiration Date | Select whether to check that the server certificate is within the validity period. |
| Key Usage | Select whether to check that the server certificate is used according to the purpose approved by the issuer. |
| Chain | Select whether to check that the server certificate chain (certification path) is correct. |
| Expiration Date Confirmation | Select whether to check that the server certificate is within the validity period. The OCSP service and CRL (Certificate Revocation List) are checked in this order when the expiration date of the certificate is checked. |
| CN | Select whether to check that the CN of the server certificate matches the server address. |

##### (e) <Synchronize WebDAV Client Setting>

- Select whether to use the proxy server for WebDAV transmission as a proxy server for the server where the dedicated software was installed.
- To use a different proxy server, select [Individual Settings] and enter the proxy server information.

##### (f) <Launch Remote Panel from vCare>

- To set whether or not to allow the remote panel to be started from the remote diagnosis system.

### 2.11.9 Machine Update Settings - Internet ISW Settings

- This is displayed when [Function Setting] is set to [ON] in [Service Mode] -> [Machine Update Setting] -> [Internet ISW] -> [Internet ISW Set].

### (1) Update Firmware at Specified Time

- This is displayed when [Open Mode Settings] is set to [Set] in [Service Mode] -> [Machine Update Setting] -> [Internet ISW] -> [Internet ISW Set].

#### (a) Use

- To update the downloaded firmware at the specified time.

#### (b) Default setting

- No

#### (c) Setting item

- Yes
- No
- If [Yes] is selected, set the time to update the firmware.

### (2) FTP Server Settings

- This is displayed when [FTP data acquisition setting] is set to [ON] in [Service Mode] -> [Machine Update Setting] -> [Internet ISW] -> [FTP Setting].

#### (a) Use

- To set whether to connect via a proxy server to access the FTP server.
- To configure the settings related to the server for connection via a proxy server.

#### (b) Default setting

- OFF

#### (c) Setting item

- ON
- OFF

#### (d) Procedure

- If [ON] is selected, configure the following settings.

1. Touch [Host Address] in [Proxy Server Address] to set the host address of the proxy server.
2. Set the port number used to access the proxy server in [Proxy Server Port Number].

### (3) Firmware Update Parameters

- This is displayed when [Open Mode Settings] is set to [Set] in [Service Mode] -> [Machine Update Setting] -> [Internet ISW] -> [Internet ISW Set].

#### (a) Use

- To download and update the firmware.
- When you wish to update the firmware at the specified time, after downloading it in the way described here, you can specify the time in [Update Firmware at Specified Time].

#### (b) Procedure

1. Touch [Download] in [Administrator Settings] -> [Network Settings] -> [Machine Update Settings] -> [Internet ISW Settings] -> [Firmware Update Parameters].
2. Select [Yes] in the confirmation screen and touch [OK].
3. The firmware download starts.
4. The message to show the status will be displayed on the screen while connecting and transferring data.
5. Select [Upgrade] or [Delete].
   - Touching [Upgrade] starts updating using the downloaded firmware data. Select [Yes] in the confirmation screen and touch [OK].
   - Touching [Delete] will delete the downloaded firmware data. Select [Yes] in the confirmation screen and touch [OK].
6. When the firmware is normally upgraded, the main body will automatically be restarted to complete the Internet ISW.

**NOTE**

- **To download the firmware, in addition to the necessary proxy settings configured in [FTP Server Settings], you need to configure appropriate settings in [Service Mode] -> [Machine Update Setting] ->[Internet ISW] -> [HTTP Setting], [FTP Setting], and [Forwarding Access Setting].**

## 2.11.10 Machine Update Settings - Machine Auto Update setting

- Obtain the update file for this machine from the file storage server to update the firmware or settings of the machine.
- This function is same as that of the service mode, but it will not be used together with the function of the service mode.
- Refer to J-4 for how to create an update file.

### (1) Auto Update Settings for This Machine

#### (a) Use

- To obtain the update file from the specified location, and configure settings to update the machine at the specified time.

#### (b) Default setting

- OFF

#### (c) Setting item

- ON
- OFF

#### (d) Procedure

If [ON] is selected, configure the following settings.

##### (1) When configuring the settings for SMB with the download protocol

**NOTE**

- **If the machine relay server is used as a server on the data providing side, the SMB protocol will not be used.**
- <Host Name>: Set the host name of the SMB server.
- <File Path>: Set the file path used in the SMB server communication.
  **NOTE**
  - **Specify the folder in which C_UpdateList.ini is stored. Refer to J-4 for details.**
- <User Name>: Set the user name used to access the SMB server.
- <Password>: Set the password used to access the SMB server.
- <Number of retries>: Set the number of times to retry when failed to obtain.
- <Update Time>: Touch Clear to set the time to update the machine.
- <Polling Interval>: Set the polling period for obtaining the update list.
- <Retry Interval>: Set the period for retrying when failed to obtain.

##### (2) When configuring the settings for HTTP with the download protocol

- <URL>: Set the address of the http server.
  **NOTE**
  - **Specify the folder in which C_UpdateList.ini is stored. Refer to J-4 for details.**
- <User Name>: Set the user name used to access the http server.
- <Password>: Set the password used to access the http server.
- <Proxy>: Select whether to use the proxy server.
  **NOTE**
  - **If [ON] is selected, set the proxy with [Administrator Settings] -> [Network Settings] -> [Machine Update Settings] -> [HTTP Proxy Settings].**
- <Connection Timeout>: Set the timeout period for connecting to the server.
- <Update Time>: Touch Clear to set the time to update the machine.
- <Polling Interval>: Set the polling period for obtaining the update list.
- <Retry Interval>: Set the period for retrying when failed to obtain.

### (2) Relay Server Function Setting

Obtain an update relay data, and configure settings for the relay server function which enables the file to be shared with the other machine.

#### (a) Update File Download

- Set a relay server to obtain the update relay data from file storage server.
- When [ON] is selected, configure the following settings.
- [OFF] is default.

##### (1) Procedure

- <URL>: Set the address of the file storage server.
  **NOTE**
  - **Specify the folder in which S_UpdateList.csv is stored. Refer to J-5 for details.**
- <User Name>: Set the user name used to access the file storage server.
- <Password>: Set the password used to access the file storage server.
- <Proxy>: Select whether to use the proxy server.
  **NOTE**
  - **If [ON] is selected, set the proxy with [Administrator Settings] -> [Network Settings] -> [Machine Update Settings] -> [HTTP Proxy Settings].**
- <Polling Interval>: Set the polling period for obtaining the update list.
- <Retry Interval>: Set the period for retrying when failed to obtain.
- <Connection Timeout> Set the timeout period for connecting to the server.

#### (b) Authentication Setting

- Configure the authentication settings of access management works as an update relay data sharing server.
- When [ON] is selected, configure the following settings.
- [OFF] is default.

#### (1) For SMB Setting

- DO NOT use the SMB setting

#### (2) For HTTP Setting

- <User Name>: Set the user name used to access the relay server by http protocol.
- <Password>: Set the password used to access the relay server.

**NOTE**

- **Once a password is set, be sure not to forget it. It is required for reset.**
- **Please refer to "J.5.3.3 Download the firmware opened from the relay server by using the Auto Update function on the other MFP." for the file path of relayed data.**

### (3) Log TX setting

#### (a) Update File Download/Update Log

- Save the update file download log for auto update of the machine, and send it to the specified location.
- When [ON] is selected, configure the settings for transmission protocol.
- [OFF] is default.

#### (1) For PC (SMB)

- <Host Name>: Set the host name of the SMB server.
- <File Path>: Set the file path used for SMB server communication.
- <User Name>: Set the user name used to access the SMB server.
- <Password>: Set the password used to access the SMB server.

#### (2) For WebDAV

- <URL>: Set the address of the WebDAV server.
- <User Name>: Set the user name used to access the WebDAV server.
- <Password>: Set the password used to access the WebDAV server.
- <Proxy>: Select whether to use the proxy server.

  **NOTE**

  - **If [ON] is selected, set the proxy with [Administrator Settings] -> [Network Settings] -> [Machine Update Settings] -> [HTTP Proxy Settings].**

#### (b) Relay Update File Download Log

- Save the log related to update relay data download for the relay server, and send it to the specified location.
- When [ON] is selected, configure the settings for transmission protocol.
- [OFF] is default.

#### (1) For PC (SMB)

- <Host Name>: Set the host name of the SMB server.
- <File Path>: Set the file path used for SMB server communication.
- <User Name>: Set the user name used to access the SMB server.
- <Password>: Set the password used to access the SMB server.

#### (2) For WebDAV

- <URL>: Set the address of the WebDAV server.
- <User Name>: Set the user name used to access the WebDAV server.
- <Password>: Set the password used to access the WebDAV server.
- <Proxy>: Select whether to use the proxy server.

  **NOTE**

  - **If [ON] is selected, set the proxy with [Administrator Settings] -> [Network Settings] -> [Machine Update Settings] -> [HTTP Proxy Settings].**

### (4) Log Confirmation

- Check the log related to update file download for auto update of the machine or update relay data download for relay server.
- The latest five logs can be checked.

### (5) Immediate Update

- This is displayed when [Auto Update Settings for This Machine] is set to [ON] in, [Administrator Settings] -> [Network Settings] -> [Machine Update Settings] -> [Machine Auto Update setting] with the following condition.
- This is displayed when the update file for auto update settings has been downloaded in HDD.

#### (a) Use

- To conduct Machine Auto Update manually.

#### (b) Procedure

- Touch [Immediate Update] to start update.
- Touch [Yes] on the confirmation screen, and touch [OK].

  **NOTE**

  **Do not set the power to OFF under the following state.**

  - **It takes about 45 seconds from touching [Immediate Update] -> [Start] to the next operation of the MFP (Auto Power OFF).**

- **About one minute after the download completed screen being displayed, the MFP will restart.**
- **When rewriting configuration files followed by the firmware, the MFP will restart again.**

#### (6) Machine Update Password

##### (a) Use

To set a password used to decrypt the configuration file(s) of the machine.

##### (b) Procedure

Enter the decryption password using the on-screen keyboard.

- <Current Password>: Enter the currently used decryption password (only when the decryption password has been set).
- <New Password>: Enter the new decryption password.
- <Password Confirmation>: Enter the new decryption password again.

**NOTE**

- **Once a password is set, be sure not to forget it. It is required for reset.**
- **Please refer to J-4 for how to make the configuration file(s).**

### 2.11.11 Machine Update Settings - HTTP Proxy Settings

#### (1) Use

- To select whether to connect via a proxy server to access the http server.
- To configure the settings of the server related to connection via a proxy server.

#### (2) Default setting

- OFF

#### (3) Setting item

- ON
- OFF

#### (4) Procedure

- If [ON] is selected, configure the following settings.

1. Touch [Host Address] in [Proxy Server Address] to set the host address of the proxy server.
2. Set the port number used to access the proxy server in [Proxy Server Port Number].
3. Select whether to perform an authentication to access a proxy server. If [ON] is set, enter the user name and password.

### 2.11.12 Security Settings - Prohibited Functions When Authentication Error

#### (1) Use

- To set the function for prohibiting authentication operation in order to prevent the unauthorized access.
- To use when setting the system to prohibit authentication failure when conducting authentication by password, etc.
- Authentications which are subjected to this function: CE authentication, administrator authentication, user+ accounts authentication, SNMP authentication, secure print authentication, user box authentication.

##### (a) Mode

| | |
|---|---|
| Mode 1 | When failed to authenticate, authentication operation (entering the password) will be prohibited for a certain period of time. |
| Mode 2 | • When failed to authenticate, authentication operation (entering the password) will be prohibited for a certain period of time. The number of times failure occurred will be counted, and when the number reaches to the specified time, authentication will be prohibited and the access will be locked.<br>• When the machine goes into an access lock condition, release the lock in the following procedure. |

##### (b) Authentications

| | |
|---|---|
| User & Accounts authentication | • Touch keys in the following order. [Administrator Settings] -> [Security Setting] -> [Security Details] -> [Prohibited Functions When Authentication Error]. Then touch [Release]. |
| SNMP authentication | |
| Secure print authentication | |
| User Box authentication | |
| WebDAV Server authentication | |
| Remote Panel authentication | |
| Administrator authentication | • After the main power switch is turned OFF and ON, the access lock is released automatically after the lapse of a predetermined period of time. |
| | • [Service Mode] -> [Enhanced Security] -> [Administrator unlocking] |
| CE authentication | 1. Main power switch is turned OFF and ON.<br>2. Touch Menu -> [Counter] -> [Print List].<br>3. Touch [Display Keypad], displaying 10-key pad.<br>4. The lock release timer starts to operate by input the Stop -> 0 -> 9 -> 3 -> 1 -> 7<br>5. When the timer reaches the time specified in this setting, the access lock is released. |

### (2) Default setting

- Mode 1

### (3) Setting item

- Mode 1
- Mode 2

**NOTE**

- **If [Administrator Settings] -> [Security Settings] -> [Enhanced Security Mode] is set to "ON", selecting "Mode 1" in this setting cancels enhanced security mode.**
  **Only the number of times for trials up to the access lock can be changed.**
- **When [Mode 2] is selected, set the number of times where checks are made before access is locked.**

### (4) Procedure

- Touch [Release Time Settings] and set a period of time that elapses before access lock is released.

## 2.11.13 Security Settings - Enhanced Security Mode

### (1) Use

- To set whether or not to enhance security.
- To use when enhancing the security function at user's option.
- The following settings are necessary for setting the security enhancement "ON".

| | |
|---|---|
| Administrator Password | Change it with the one which meets password rules. |
| User Authentication | Set to "ON (MFP)", "External Server Authentication", or "Main + External Server". |
| HDD encryption word | Set the encryption word with 20 characters. |
| SSL Certificate | Register self-certificate for SSL communication from the PSWC. |
| CE Password | Change it with the one which meets password rules. |
| CE Authentication | Set to [ON]. |
| Image Controller Setting | Set to [Controller 0]. |
| Management Function Choice | Set to "Unset." |

### (2) Default setting

- OFF

### (3) Setting item

- ON
- OFF

**NOTE**

- **Note that setting Enhanced Security Mode to "ON" disables the following functions.**
  - **Print Data Capture (forcibly prohibited when Enhanced Security Mode is set to "ON")**
  - **In CS Remote Care, the following operation is prohibited.**
    - **Rewriting instructions of firmware, communication of the account track counter information, the setting renewal of the machine.**
    - **Firmware upgrading through Internet ISW (When the Enhanced Security Mode is set to ON, the setting of this function cannot be changed from "OFF.")**
- **Setting the Enhanced Security Mode "ON" will change the setting values for the following functions.**
- **In addition, the indicator of "not be changed" below indicates that the settings cannot be changed while Enhanced Security Mode is maintained "ON".**

| Function Name | | Default Setting | When Enhanced Security mode is set to [ON] |
|---|---|---|---|
| **Password Rules** | **To apply the password rule to enhance security.** | **Disable** | **Enable (not to be changed)** |
| **Prohibited Functions When Authentication Error** | **To set the function for prohibiting Authentication operation in order to prevent the unauthorized access.** | **Mode 1** | **Mode 2 (not to be changed): Three times is set.<br>* The number of times can be changed to once, twice, or three times. (It is twice, four or six times for WebDAV server password.)** |
| **Confidential Document Access Method** | **To display the status of the Authentication system on the control panel for the Confidential document access.** | **Mode 1** | **Mode 2 (not to be changed)<br>* In association with Prohibited Functions When Authentication Error, the method is changed from authentication using Secure Document ID and password (Mode 1) to that using the password with the Secure Document first narrowed down by Secure Document ID (Mode 2).** |
| **Public User Access** | **To permit use by a public user having no user registration if user authentication setting has been made.** | **Restrict** | **Restrict (not to be changed)** |
| **User Name List** | **To display the list key for User names on User Authentication screen.** | **OFF** | **OFF (not to be changed)** |

| Function Name | | Default Setting | When Enhanced Security mode is set to [ON] |
|---|---|---|---|
| Print without Authentication | To allow or restrict printing which user and account are not specified. | Restrict | Restrict (not to be changed) |
| Counter Remote Control | To select whether or not to allow the Center to acquire counter information managed by the machine when CS Remote Care is used. | Restrict | Restrict (not to be changed) |
| Print Simple Auth. (Authentication Setting) | You can print from the printer driver using authentication that requires only your user name (without password). | Restrict | Restrict (not to be changed) |
| User Box Administrator Setting | To set whether to allow or restrict the Box Administrator to use the system. | Restrict | Restrict (not to be changed) |
| SSL | To set whether to encrypt access by SSL. | OFF | ON (not to be changed) |
| SSL Encryption Strength | To set the SSL encryption strength for the SSL encryption communication. | AES-256, 3DES-168, RC4-128 | AES/3DES (not to be changed to one containing strength lower than AES/3DES) |
| Automatically Obtain Certificates of S/MIME | - | No | No (not to be changed) |
| S/MIME Encryption Method | - | 3DES | 3DES (not to be changed to DES or RC-2) |
| FTP Server | To set whether to use FTP server or not. | ON | OFF (not to be changed) |
| SNMPv1/v2c | To use when changing Write setting. | Read/Write enable | Only Read is enabled (not to be changed) |
| SNMP v3 Security Level and auth/priv-password | To set the security level for the Reading/Writing Authority User which is used for SNMP v3. | auth/priv-password | • The security level can be selected from among [auth-password] and [auth/priv-password].<br>• An 8-digit-or-more auth-password and priv-password can both be set. |
| Print Data Capture | To set whether to allow or restrict capturing the Print Job Data. | Allow | Restrict (not to be changed) |
| Network Setting Clear | To clear the network setting through PageScope Web Connection. | Enabled | Restrict |
| Release Time Settings | To set the period of time to be elapsed before the access lock state is released. | 5 min. | The setting value should be 5 min. or more (no value less than 5 can be set) |
| Destination Registration Change by User (Address Book and Program destination) | - | Allow | Restrict (not to be changed) |
| Secure Print User Box Preview | - | Thumbnail View, Detail View, and Document Details are enabled | Only Detail View is enabled before password authentication (Mode 2) |
| Initialize (Network Settings) | To clear the network related settings. | Enabled | Restrict (not to be changed) |
| Image Log Transfer Settings | Specifies whether to transfer the input or output image data to the server using whenever machine inputs or outputs image data. | OFF | OFF (not to be changed) |
| Machine Update Settings | To set firmware upgrading by Internet ISW, and enable or disable various settings. | No | No (not to be changed) |
| operation Ban release time (CE Authentication) | To set the period of time to be elapsed before the access lock state is released in CE password authentication. | 5 min. | The setting value should be 5 min. or more (no value less than 5 can be set) |
| E-mail RX Print | To print an E-mail attachment, send an E-mail to the E-mail address of this machine. | OFF | OFF (not to be changed) |
| IWS Settings | Set the operating environment of IWS (Internal Web Server) function. | OFF | OFF (not to be changed) |

| Function Name | | Default Setting | When Enhanced Security mode is set to [ON] |
|---|---|---|---|
| **Report File Attachment** | **To set whether to convert a TX result report to a file and attach it to an E-mail.** | **With Attachment** | **Without Attachment (not to be changed)** |
| **Storage data backup** | **To set whether to permit our service representative to back up or restore the storage on this machine.** | **Restrict** | **Restrict (not to be changed)** |
| **CS Remote Care** | **CS Remote Care enables the machine and the computer at CS Remote Care center to exchange data through telephone/fax line, network or E-mail in order to control the machine.** | **Usable** | **Remote device setting disabled** |
| **Maintenance Mode Access** | **To set whether to permit your service representative to change [Administrator Settings] of a device without authentication.** | **Restrict** | **Restrict (not to be changed)** |
| **Simple Connection Setting** | **To set the pairing method to connect to an Android/iOS terminal.** | **• QR Code Display Setting: OFF<br>• Enable NFC: OFF<br>• Enable Bluetooth LE: OFF** | **• OFF (not to be changed)<br>• OFF (not to be changed)<br>• OFF (not to be changed)** |

### 2.11.14 Security Settings - HDD Encryption Setting

#### (1) Use

- To set the encrypting passphrase.
- To re-set encrypting passphrase due to exchange of SSD board or etc.

**NOTE**

- **HDD formatting is required after this setting. Therefore it is necessary to retrieve certain data from HDD in advance. The following data will be lost after HDD formatting.**
  1. **Address data**
  2. **Authentication data: Authentication mode, user authentication setting, account track setting**
  3. **Box setting data: Box and text in the box, setting information of each box, box for fax**
  4. **Job history, fax transmission history**

  **And after setting the HDD encryption key, the movie data, voice data, OCR dictionary data, PDF/A font, OCR font, and Unicode font need to be reinstalled as necessary since these data will be deleted by HDD format.**
- **If you replace the HDD due to its breakage or other reasons, you can automatically reset the encryption passphrase by installing a new HDD and performing the logical format.**
- **Make sure to configure the following settings after formatting the HDD.**
  - **Installing the firmware.**
  - **Reinstall movie data, voice data, OCR dictionary data, and PDF/A fonts with the install data function under the service mode. [Service Mode] -> [System 2] -> [Install Data]**
- **Make sure to install the firmware after the format of the hard disk. Otherwise a trouble code "C-D012 mount error due to unformatted HDD" will appear.**

#### (2) Procedure

1. Press [HDD Encryption Setting].
2. Enter encryption passphrase (20 characters) with the keyboard on the operation panel and press [OK].
   **NOTE**
   - **Double-byte and identical characters are not acceptable.**
3. Turn OFF the main power switch and turn it ON again more than 10 seconds after.
4. Open [Administrator Settings] and conduct HDD formatting according to the instruction appeared on the panel.
5. Turn OFF the main power switch and turn it ON again more than 10 seconds after.

### 2.11.15 Security Settings - Debug Log Encryption Settings

#### (1) Debug Log Encryption Settings

##### (a) Use

- To set a password used to encrypt debug data when storing it into the HDD.

##### (b) Default setting

- 01234567890123456789

##### (c) Procedure

- Enter an encryption passphrase from the on-screen keyboard.
  1. Enter the encryption passphrase currently in use.

2. Encryption Passphrase: Enter a new encryption passphrase.
3. Encryption Passphrase Confirmation: Re-enter the new encryption passphrase.

### 2.11.16 Security Settings - Image Log Transfer Settings (Type1)

**NOTE**

- **This is displayed only when Switch No. "63" is set to [00000001] at Bit assignment/[01] at HEX assignment (Type 1) or [00000010] at Bit assignment/[02] at HEX assignment (Type 2) in [Service Mode] -> [System 2] -> [Software Switch Setting].**

#### (1) Use

- Specifies whether to transfer the input or output image data to the server using whenever machine inputs or outputs image data. Makes the settings of the WebDAV Server, the FTP Server, or the SMB Server where image data are transferred.
- Use this settings to keep logs of input and output image data for security purpose.

#### (2) Default setting

- OFF

#### (3) Setting item

- ON
- OFF

#### (4) Procedure

- When selecting [ON], configure the following settings.

1. Select Forwarding Destination and configure the sever settings.

| | |
|---|---|
| WebDAV Server setting | Host Name, File Path, User Name, Password, Port Number, Proxy, SSL Settings |
| FTP Server setting | Host Name, File Path, User Name, Password, Port Number, PASV, and Proxy |
| SMB Server setting | Host Name, File Path, User Name, Password |

2. Specify Audit Item.

| | |
|---|---|
| All Items | Applied to Fax TX, Fax RX, Scan, and Others. |
| Individual Item | Can be selected from Fax, Fax RX, and Scan. |

### 2.11.17 Security Settings - Image Log Transfer Settings (Type2)

**NOTE**

- **This is displayed only when Switch No. "63" is set to [00000001] at Bit assignment/[01] at HEX assignment (Type 1) or [00000010] at Bit assignment/[02] at HEX assignment (Type 2) in [Service Mode] -> [System 2] -> [Software Switch Setting].**

#### (1) Use

- To select whether or not to transfer only input/output images in Fax TX/RX to the server when image data is input or output to or from the machine.

#### (2) Default setting

- OFF

#### (3) Setting item

- ON
- OFF

#### (4) Procedure

- When selecting [ON], configure the following settings.

1. Configure the file type and scan setting.
2. Select Forward or Do Not Forward for Fax TX/RX. To transfer data, select [Forwarding Dest.] and configure the server settings.

| | |
|---|---|
| FTP Server setting | Host Name, File Path, User Name, Password, Port Number, PASV, and Proxy |
| SMB Server setting | Host Name, File Path, User Name, Password |
| WebDAV Server setting | Host Name, File Path, User Name, Password, Port Number, Proxy, SSL Settings |

### 2.11.18 Security Settings - Driver Password Encryption Setting

#### (1) Use

- To set whether to use the factory default encryption word or user-defined one as a common key that encrypts a password used for a print job.

| | |
|---|---|
| User-Defined | Sets an encryption word. Enter an encryption word of 20 letters. |
| Use Factory Default | Uses the factory default encryption word (undisclosed predefined encryption key). |

**NOTE**
- **When selecting [User-Defined], set an encryption key being consisted of the same letters in the printer driver. If the encryption word set in the machine differs from the encryption key set in the printer driver, different encrypted passwords are created and printing cannot be made.**
- **The use of OpenAPI allows an encryption key to be obtained from the machine.**

#### (2) Default setting
- Use Factory Default

#### (3) Setting item
- User-Defined
- Use Factory Default

### 2.11.19 Security Settings - Quick Security Setting - Administrator Password
#### (1) Use
- To set/change the administrator password.

#### (2) Procedure
- Enter the administrator password on the on-screen keyboard.
  1. Enter the current administrator password
  2. Password: Enter the new administrator password to be used
  3. Password Confirmation: Re-enter the new administrator password

**NOTE**
- **When "Enable" is selected in [Administrator Settings] -> [Security Settings] -> [Security Details] -> [Password Rules], the following passwords cannot be accepted: password of single repeated characters, password same as the one before being changed, and password where the number of characters is less than the minimum number specified in [Set Minimum Password Length].**

### 2.11.20 Security Settings - Quick Security Setting - Password Rules
#### (1) Use
- To set whether to apply the password rules.
- To apply the password rule to enhance security.
- Passwords to be covered: CE password, administrator password, user password, account track password, public user box password, user box administrator password, passwords for confidential documents, WebDAV server password, SNMPv3 Write User password, remote panel server password, Encryption Passphrase
- Details of the password rules:
  - Minimum number of characters specified in [Set Minimum Password Length] (Default: 12 characters)
  - Upper- and lower-case letters are distinguished in alphabetical letters.
  - Only one-byte symbols can be used.
  - Password with only the same letter is prohibited.
  - Password same with the one prior to change is prohibited.

  **NOTE**
  - **When the password rule is set to [Enable], the password cannot be changed or registered unless it follows the above conditions.**

- When [Enable] is selected, it is possible to determine the minimum number of characters that a password can contain. (8 to 64 characters, Default: 12 characters)

#### (2) Default setting
- Disable

#### (3) Setting item
- Enable
- Disable

**NOTE**
- **If [Administrator Settings] -> [Security Settings] -> [Enhanced Security Mode] is set to "ON", selecting "Disable" in this setting cancels enhanced security mode.**
- **[Enable] cannot be selected when [Service Mode] -> [Enhanced Security] -> [CE Authentication] is set to "OFF." "OFF" setting of [CE Authentication] will not be displayed and cannot be set to "OFF" when [Password Rules] is set to "Enable."**

### 2.11.21 Security Settings - Quick Security Setting - Quick IP Filtering
#### (1) Use
- A function that only allows access to the MFP from devices within the same IP group.
- Determine the receiving IP for the decided IP when setting the address to the MFP by DHCP or manually.

#### (2) Default setting
- Synchronize IP Address (Japan)
- No Filtering (except for Japan)

#### (3) Procedure

- Quick IP Filtering activates automatically.

##### (a) Synchronize IP Address

- IPv4 address: Only reception by an IP address with the upper 3 bites same as that of the IP address set in the MFP is allowed.
  NOTICE
  - If the MFP IP address is set to [192.168.0.134], the filtering range is as follows.
    192.168.0.0 to 192.168.0.255

- IPv6 address: Only Global Unicast Address (2000::/3) is available. Only reception by an IP address with the upper 64 bits same as that of the IP address set in the MFP is allowed.
  NOTICE
  - If the MFP IP address is set to “2345:1:2:3:4:5:6:7”, the filtering range is as follows.
    2345:1:2:3::0 to 2345:1:2:3:FFFF:FFFF:FFFF:FFFF

##### (b) Synchronize Subnet Musk

- IPv4 address: Use the IP address set in the MFP and the Subnet Mask to allow receptions by IP addresses within the range belongs to the same network.
  NOTICE
  - If the MFP IP address is set to [150.176.17.134] and the Subnet Mask is set to [255.255.252.0], the filtering range is as follows.
    150.16.16.*** to 150.16.19.****
  - If the Subnet Mask has not been set, or it has been set to [0.0.0.0], only accesses from the IP address with the end differs from that of the IP address set in the MFP are restricted. As a result, filtering runs in the same way as that it has been set in [Synchronize IP Address].
- IPv6 address: Only Global Unicast Address (2000::/3) is available. And use the Global IP address and Prefix to perform filtering.
  NOTICE
  - If the MFP IP address is set to [IP address=2345:1:2:3:4:5:6:7], and the Prefix is set to [/64], the filtering range is as follows.
    2345:1:2:3::0 to 2345:1:2:3:FFFF:FFFF:FFFF:FFFF
  - If the Prefix has not been set, filtering runs in the same way as that the Prefix is set to 64 bit.

##### (c) No Filtering

- For both IPv4 address and IPv6 address, no filtering is performed.

### 2.11.22 Security Settings - Quick Security setting - PSWC Setting

#### (1) Use

- To set whether to use the PageScope Web Connection.

**NOTE**

- **To use the PageScope Web Connection, enable "JavaScript" and "Cookie" of the Web browser.**
- **If this machine is connected to the internet via a proxy server, register the Proxy Settings of the Web browser as "Exceptions".**
- **When the PageScope Web Connection is not displayed properly even if the above settings have been conducted, delete the cache of the Web browser.**

#### (2) Default setting

- ON (Japan)
- OFF (except for Japan)

#### (3) Setting item

- ON
- OFF

### 2.11.23 Security Settings - Quick Security setting - Security Warning Display Setting

#### (1) Use

- To select whether or not to display the security warning screen if an administrator password is still remained as default setting or does not meet the password rules.

#### (2) Default setting

- ON (Japan)
- OFF (except for Japan)

#### (3) Setting item

- ON
- OFF

### 2.11.24 License Settings

#### (1) Get Request Code

##### (a) Use

- To display and print a request code and serial number used to activate i-Option.

#### (b) Procedure

1. Touch [Get Request Code], and [Yes].
2. A serial number and request code are issued.
3. By touching [Print], the serial number and request code are printable.

### (2) Install License

- It is displayed when this machine is equipped with an optional upgrade kit UK-211.

#### (a) Use

- To allow administrator to activate functions provided by i-Option.
- The functions can be activated by entering Function/License Code or Token Code.
- By making settings in [Service Mode] -> [Billing Setting], CE can also activate functions provided by i-Option.

**NOTE**

- **When activating i-Option, MFP accesses to KM license server via WebDAV connection. Set the proxy server setting in [Administrator Settings] -> [Network Settings] -> [WebDAV Settings] -> [Proxy Setting for Remote Access] as occasion demands.**
- **For accessing to KM license server, it is necessary to select "Fixed Address" in [Service Mode] -> [Billing Setting] -> [WebDAV Server Setting].**
- **When the server connection error "MAE001" is displayed, check the network settings.**

#### (b) Procedure (Function/License Code)

1. Touch [Install License].
2. Touch [Function/License Code].
3. Touch [Function Code].
4. Enter the Function Code.
5. Touch [OK].
6. Touch [License Code].
7. Enter the license code that was issued in the license management server using the key board on the control panel, and touch [OK].
8. Touch [Install].
9. Confirm the message, select [Yes], and touch [OK].
10. Turn OFF and ON the main power switch.

#### (c) Procedure (Token Code)

1. Touch [Token Code].
2. Touch one of the Token Codes 1 to 10.
3. Enter the Token Code.
4. Touch [OK].
5. Touch [Install].
6. Confirm the message, select [Yes], and touch [OK].
7. Turn OFF and ON the main power switch.

### (3) List of Enabled Functions

- It is displayed when this machine is equipped with an optional upgrade kit UK-211.

#### (a) Use

- To display currently activated functions.

## 2.11.25 Voice Guidance Settings-Voice Guidance

### (1) Use

- To select whether or not to enable the voice guidance function.
- Selecting [ON] allows you to configure the settings on the voice guidance function in the [Accessibility] screen.

**NOTE**

- **To use voice guidance, the optional upgrade kit UK-211 and i-Option LK-104 v3 must be activated, and the optional local interface kit EK-608 or EK-609 must be mounted.**

### (2) Default setting

- OFF

### (3) Setting item

- ON
- OFF

## 2.11.26 External Memory Backup - Import/Export

- It will be displayed when [Service Mode] -> [System 2] -> [Software Switch Setting] shows that switch No.72 is set to [00000100] at Bit assignment/[04] at HEX assignment.

### (1) Use

- To export various types of setting information to an external memory (USB memory).
- To import various types of setting information from other machine via the USB memory.

- Types of data that can be exported and imported: Address Book, Authentication Data, Network Settings, Remote Access Setting, User Setting, Administrator Setting

#### (2) Procedure (Import)

1. Connect the external memory to the machine.
2. Touch [Import].
3. Touch [Password], enter the password previously set for the import data, and touch [OK].
4. Touch [Start].
5. Import results appear.

#### (3) Procedure (Export)

1. Connect the external memory to the machine.
2. Touch [Export].
3. Select the item to be exported.
4. Touch [Password], enter the password of the export data, and touch [OK].
5. Touch [Start].
6. Export results appear.

### 2.11.27 Remote Access Setting - Import/Export User Data

#### (1) Use

- To set whether to remotely rewrite (import or export) user data such as address information using the CS Remote Care.

#### (2) Default setting

- Restrict

#### (3) Setting item

- Allow
- Restrict

# 3. ADJUSTMENT ITEM LIST

## 3.1 Replace feed roller, pick-up roller, separation roller (tray 1, tray 2)

| Replacement part/Service job | Adjustment/setting items | Procedure |
|---|---|---|
| Replace feed roller, pick-up roller, separation roller (tray 1, tray 2) | [Service Mode] / [Counter] / [Life] / [Counter Clear] | 1 |

## 3.2 Replace feed roller, separation roller assy (manual bypass tray)

| Replacement part/Service job | Adjustment/setting items | Procedure |
|---|---|---|
| Replace feed roller, separation roller assy | [Service Mode] / [Counter] / [Life] / [Counter Clear] | 1 |

## 3.3 Install LCT (Built-in)

| Replacement part/Service job | Adjustment/setting items | Procedure |
|---|---|---|
| Install LCT (Built-in) | [Service Mode] / [System2] / [LCT (Built-in) Size Settings] | 1 |
| | [Service Mode] / [Machine] / [Printer Area] / [Printer Image Centering Side 1] | 2 |
| | [Service Mode] / [Machine] / [Printer Area] / [Prt. Image Center. Side 2 (Dup)] | 3 |
| | [Service Mode] / [Machine] / [Printer Area] / [Tray Printing Position: Tip] | 4 |

## 3.4 Replace CCD unit

| Replacement part/Service job | Adjustment/setting items | Procedure |
|---|---|---|
| Replace CCD unit | [Service Mode] / [System2] / [CCD Calibration] | 1 |
| | [Service Mode] / [System2] / [Line Mag Setting] | 2 |
| | [Service Mode] / [Machine] / [Printer Area] / [Paper Feed Direction Adj.] | 3 |
| | [Service Mode] / [Machine] / [Scan Area] / [Main Scan Zoon Adj.] | 4 |
| | [Service Mode] / [Machine] / [Scan Area] / [Scanner Image Side Edge] | 5 |

## 3.5 Replace developing unit

| Replacement part/Service job | Adjustment/setting items | Procedure |
|---|---|---|
| Replace developing unit | [Service Mode] / [Imaging Process Adjustment] / [Gradation Adjust] | 1 |

## 3.6 Replace drum unit

| Replacement part/Service job | Adjustment/setting items | Procedure |
|---|---|---|
| Replace drum unit | [Service Mode] / [Imaging Process Adjustment] / [Gradation Adjust] | 1 |

## 3.7 Replace transfer belt unit

| Replacement part/Service job | Adjustment/setting items | Procedure |
|---|---|---|
| Replace transfer belt unit | [Service Mode] / [Counter] / [Life] / [New Release] | 1 |
| | [Service Mode] / [Imaging Process Adjustment] / [Gradation Adjust] | 2 |

## 3.8 Replace fusing unit

| Replacement part/Service job | Adjustment/setting items | Procedure |
|---|---|---|
| Replace fusing unit | [Service Mode] / [Counter] / [Life] / [New Release] | 1 |

## 3.9 Replace PH unit

| Replacement part/Service job | Adjustment/setting items | Procedure |
|---|---|---|
| Replace PH unit | [Service Mode] / [Machine] / [Print Head Skew Adj.] / [Print Head Skew Reset] | 1 |
| | [Service Mode] / [Machine] / [Printer Area] / [Leading Edge Adjustment] | 2 |
| | [Service Mode] / [Machine] / [Printer Area] / [Printer Image Centering Side 1] | 3 |

## 3.10 Replace original size detection sensor

| Replacement part/Service job | Adjustment/setting items | Procedure |
|---|---|---|
| Replace original size detection sensor | Installation of original size sensor | 1 |
| | [Service Mode] / [State Confirmation] / [Table Number] | 2 |

### 3.11 Replace scanner motor

| Replacement part/Service job | Adjustment/setting items | Procedure |
|---|---|---|
| Replace scanner motor | Scanner motor belt adjustment | 1 |

### 3.12 Replace scanner home sensor

| Replacement part/Service job | Adjustment/setting items | Procedure |
|---|---|---|
| Replace scanner home sensor | [Service Mode] / [Machine] / [Scan Area] / [Image Position: Leading Edge] | 1 |

### 3.13 Replace MFP board

| Replacement part/Service job | Adjustment/setting items | Procedure |
|---|---|---|
| Replace MFP board | Entering the machine type information | 1 |
| | Installing the firmware | 2 |
| | Restore (backup) data | 3 |
| | [Service Mode] / [Imaging Process Adjustment] / [Gradation Adjust] | 4 |

### 3.14 Replace eMMC board

| Replacement part/Service job | Adjustment/setting items | Procedure |
|---|---|---|
| Replace eMMC board | Installing the firmware | 1 |

**NOTE**

- **Contact Konica Minolta technical support if the eMMC board needs to be replaced.**

### 3.15 Replace original glass

| Replacement part/Service job | Adjustment/setting items | Procedure |
|---|---|---|
| Replace original glass | [Service Mode] / [Machine] / [Scan Area] / [Scanner Image Side Edge] | 1 |
| | [Service Mode] / [Machine] / [Scan Area] / [Image Position: Leading Edge] | 2 |

### 3.16 Replace hard disk

| Replacement part/Service job | Adjustment/setting items | Procedure |
|---|---|---|
| Replace hard disk | [Service Mode] / [State Confirmation] / [Memory/Storage Adjustment] / [Format] | 1 |
| | [Service Mode] / [State Confirmation] / [Memory/Storage Adjustment] / [Storage R/W Check] | 2 |
| | [Service Mode] / [State Confirmation] / [Memory/Storage Adjustment] / [HDD Mirroring Rebuild] | 3 |

### 3.17 Replace control panel unit

| Replacement part/Service job | Adjustment/setting items | Procedure |
|---|---|---|
| Replace control panel unit | Touch panel calibration | 1 |
| | [Accessibility] / [Touch Panel Adjustment] | 2 |

### 3.18 Replace DF control board (DF-704/DF-629)

| Replacement part/Service job | Adjustment/setting items | Procedure |
|---|---|---|
| Replace DF control board | Installing the firmware | 1 |
| | [Service Mode] / [ADF] / [Original Tray Width] | 2 |
| | [Service Mode] / [ADF] / [Mixed Original Size Adjustment] | 3 |

### 3.19 Add key counter

| Replacement part/Service job | Adjustment/setting items | Procedure |
|---|---|---|
| Add key counter | Re-entry of Enhanced Security settings | 1 |

### 3.20 Execute initialize

| Replacement part/Service job | Adjustment/setting items | Procedure |
|---|---|---|
| Execute initialize | [Service Mode] / [System 2] / [HDD Installed] | 1 |
| | Re-entry of Utility settings | 2 |
| | [Service Mode] / [System 1] / [Serial Number] | 3 |
| | [Service Mode] / [System 1/2] and re-entry of setting values | 4 |
| | Re-entry of Enhanced Security settings | 5 |

## 3.21 Add an optional device

| Replacement part/Service job | Adjustment/setting items | Procedure |
|---|---|---|
| Add an optional device | [Service Mode] / [Firmware Version] | 1 |

## 3.22 Execute F/W update

| Replacement part/Service job | Adjustment/setting items | Procedure |
|---|---|---|
| Execute F/W update | [Service Mode] / [Firmware Version] | 1 |

## 3.23 Add fax board

| Replacement part/Service job | Adjustment/setting items | Procedure |
|---|---|---|
| Add fax board | [Service Mode] / [System2] / [Option Board Status] | 1 |
| | Installing the firmware | 2 |
| | [Service Mode] / [System1] / [Marketin Area] / [Fax Target] | 3 |

## 3.24 Mount DF-629

| Replacement part/Service job | Adjustment/setting items | Procedure |
|---|---|---|
| Mount DF-629 | ADF adjusting the height | 1 |
| | Adjusting front side skew feed on ADF | 2 |
| | [Service Mode] / [ADF] / [Read Pos Adj] | 3 |
| | [Service Mode] / [ADF] / [Feed Zoom] | 4 |

## 3.25 Mount DF-704

| Replacement part/Service job | Adjustment/setting items | Procedure |
|---|---|---|
| Mount DF-704 | ADF adjusting the height | 1 |
| | Adjusting front side skew feed on ADF | 2 |
| | Adjusting back side skew feed on ADF | 3 |
| | [Service Mode] / [ADF] / [Original Tray Width] | 4 |
| | [Service Mode] / [ADF] / [Original Stop Position] | 5 |
| | [Service Mode] / [ADF] / [Feed Zoom] | 6 |
| | [Service Mode] / [ADF] / [FD-Mag. ADJ. (B)] | 7 |
| | [Service Mode] / [ADF] / [Main Scanning Direction Zoom] | 8 |
| | [Service Mode] / [ADF] / [Read Pos Adj] | 9 |
| | [Service Mode] / [System 2] / [CIS Image Adjustment] | 10 |

## 3.26 Replace CIS module (when DF-704 is mounted)

| Replacement part/Service job | Adjustment/setting items | Procedure |
|---|---|---|
| Replace CIS module | Adjusting back side skew feed on ADF | 1 |
| | [Service Mode] / [ADF] / [Feed Zoom] | 2 |
| | [Service Mode] / [ADF] / [FD-Mag. ADJ. (B)] | 3 |
| | [Service Mode] / [ADF] / [Auto Stop Position Adjustment] | 4 |
| | [Service Mode] / [ADF] / [Main Scanning Direction Zoom] | 5 |
| | [Service Mode] / [ADF] / [Read Pos Adj] | 6 |
| | [Service Mode] / [System 2] / [CIS Image Adjustment] | 7 |

# 4. LIST OF SERVICE MODE

## 4.1 List of service mode (outline)

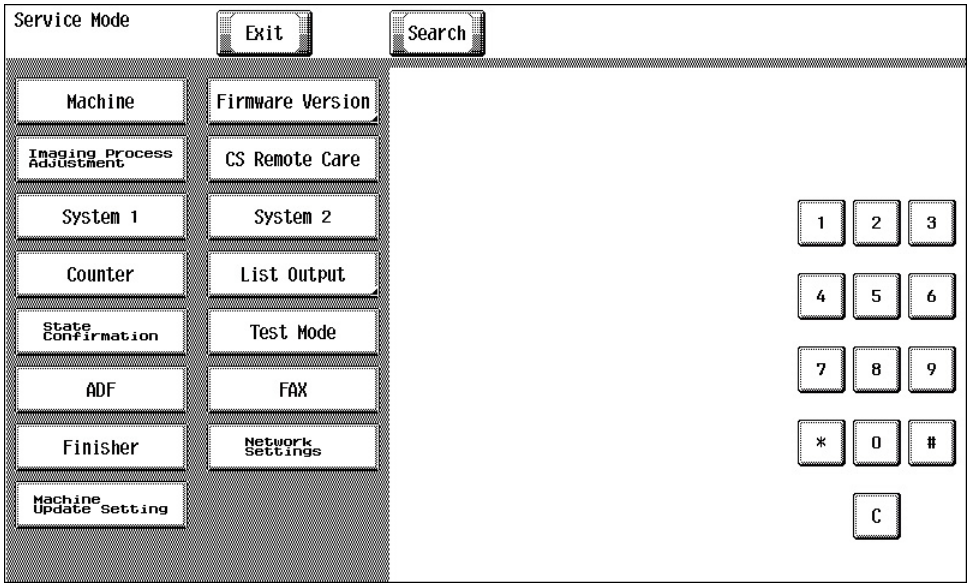


**NOTE**

- **After exiting Service Mode, you must turn OFF the main power switch. Turning ON the main power switch again after waiting 10 seconds makes the changes to the Service Mode setting take effect.**

| | | |
|---|---|---|
| Service Mode | Search | I.5.3 Search |
| | Machine | I.4.2.1 Machine |
| | Firmware Version | I.5.5 Firmware Version |
| | Imaging Process Adjustment | I.4.2.2 Imaging Process Adjustment |
| | CS Remote Care | I.4.2.3 CS Remote Care |
| | System 1 | I.4.2.4 System 1 |
| | System 2 | I.4.2.5 System 2 |
| | Counter | I.4.2.6 Counter |
| | List Output | I.4.2.7 List Output |
| | State Confirmation | I.4.2.8 State Confirmation |
| | Test Mode | I.4.2.9 Test Mode |
| | ADF *1 | I.4.2.10 ADF |
| | FAX *2 | I.4.2.11 FAX |
| | Finisher *3 | I.4.2.12 Finisher |
| | Network Settings | I.4.2.13 Network Settings |
| | Machine Update Setting | I.4.2.14 Machine Update Setting |

- The function tree is shown to comply with the format displayed on the screen.
- *1: It will be displayed only when the optional dual scan document feeder DF-704 or the reverse automatic document feeder DF-629 is mounted.
- *2: It will be displayed only when the optional fax kit FK-514 is mounted.
- *3: It will be displayed only when the optional finisher FS-533, FS-534 or FS-534SD is mounted.

## 4.2 List of service mode (detail)

### 4.2.1 Machine

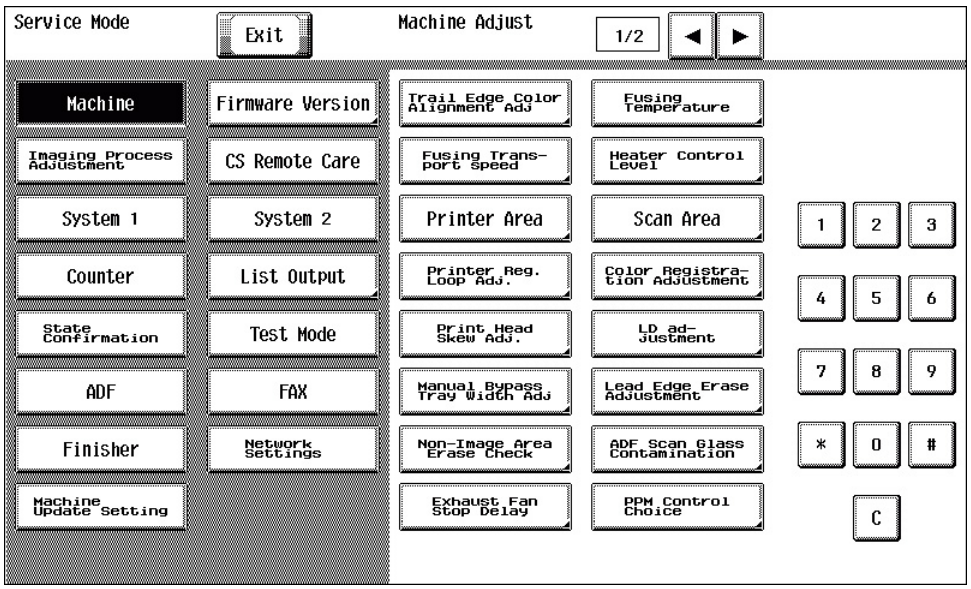


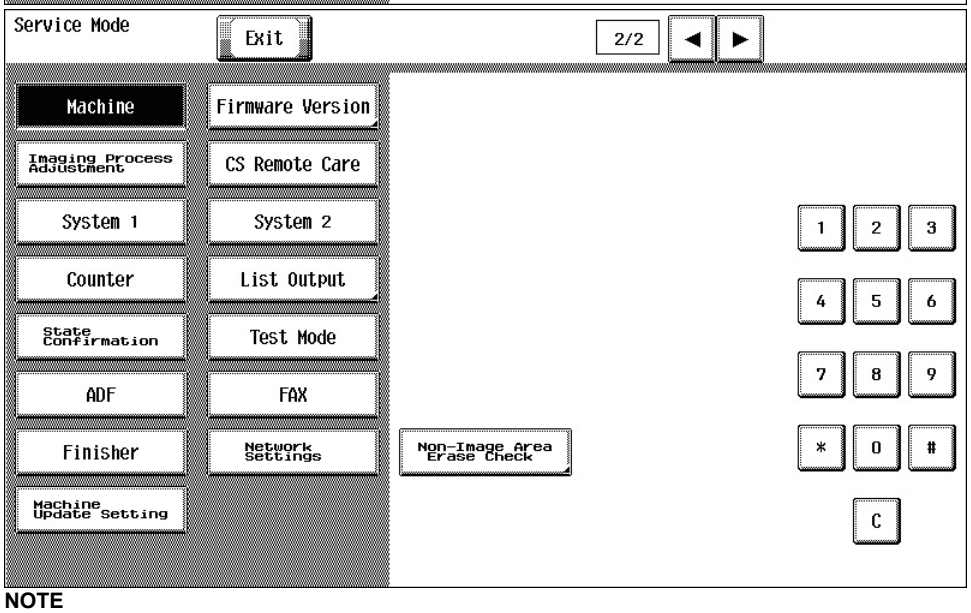


**NOTE**

- **After exiting Service Mode, you must turn OFF the main power switch. Turning ON the main power switch again after waiting 10 seconds makes the changes to the Service Mode setting take effect.**

| Machine | | Ref. Page |
|---|---|---|
| Trail Edge Adjust | | I.5.4.1 Trail Edge Adjust |
| Fusing Temperature | | I.5.4.2 Fusing Temperature |
| Fusing Transport Speed | | I.5.4.3 Fusing Transport Speed |
| Heater Control Level | | I.5.4.4 Heater Control Level |
| Printer Area | Leading Edge Adjustment | I.5.4.5.(1) Leading Edge Adjustment |
| | Printer Image Centering Side 1 | I.5.4.5.(2) Printer Image Centering Side 1 |
| | Leading Edge Adj. Side 2 (Duplex) | I.5.4.5.(3) Leading Edge Adj. Side 2 (Duplex) |
| | Prt. Image Center. Side 2 (Dup) | I.5.4.5.(4) Prt. Image Center. Side 2 (Dup) |
| | Paper Feed Direction Adj. | I.5.4.5.(5) Paper Feed Direction Adj. |
| | Tray Printing Position: Tip | I.5.4.5.(6) Tray Printing Position: Tip |
| Scan Area | Image Position: Leading Edge | I.5.4.6.(1) Image Position: Leading Edge |
| | Scanner Image Side Edge | I.5.4.6.(2) Scanner Image Side Edge |
| | Main Scan Zoom Adj. | I.5.4.6.(3) Main Scan Zoom Adj. |
| | Sub Scan Zoom Adj. | I.5.4.6.(4) Sub Scan Zoom Adj. |
| Printer Reg. Loop Adj. | | I.5.4.7 Printer Reg. Loop Adj. |
| Color Registration Adjustment | | I.5.4.8 Color Registration Adjustment |
| Print Head Skew Adj. | Print Head Skew Adj. | I.5.4.9.(1) Print Head Skew Adj. |
| | Print Head Skew Reset | I.5.4.9.(2) Print Head Skew Reset |
| LD adjustment | LD Timing Adj. | I.5.4.10 LD adjustment |

| Machine | | Ref. Page |
|---|---|---|
| Trail Edge Adjust | | I.5.4.1 Trail Edge Adjust |
| | LD 1/2 Balance Adj. | |
| | LD Light Width Adjustment | |
| Manual Bypass Tray Width Adj | | I.5.4.11 Manual Bypass Tray Width Adj |
| Lead Edge Erase Adjustment | | I.5.4.12 Lead Edge Erase Adjustment |
| Non-Image Area Erase Check | | I.5.4.13 Non-Image Area Erase Check |
| ADF Scan Glass Contamination | | I.5.4.14 ADF Scan Glass Contamination |
| Exhaust Fan Stop Delay | | I.5.4.15 Exhaust Fan Stop Delay |
| PPM Control Choice | | I.5.4.16 PPM Control Choice |
| Non-Image Area Erase Check | | Not used |

### 4.2.2 Imaging Process Adjustment

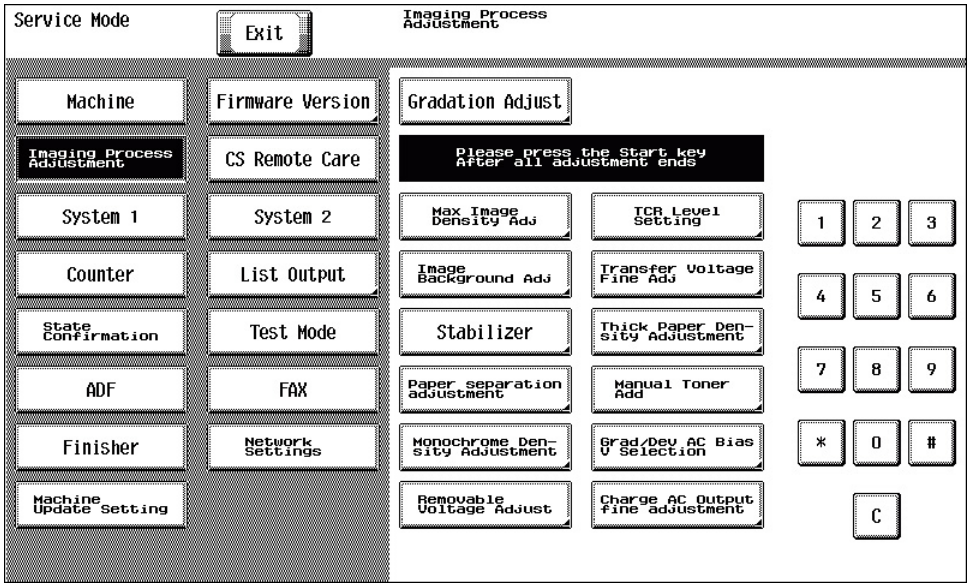


**NOTE**

- **After exiting Service Mode, you must turn OFF the main power switch. Turning ON the main power switch again after waiting 10 seconds makes the changes to the Service Mode setting take effect.**

| Imaging Process Adjustment | | Ref. Page |
|---|---|---|
| Gradation Adjust | | I.5.6.1 Gradation Adjust |
| Max Image Density Adj | Copy | I.5.6.2 Max Image Density Adj |
| | Printer | |
| TCR Level Setting | | I.5.6.3 TCR Level Setting |
| Image Background Adj | | I.5.6.4 Image Background Adj |
| Transfer Voltage Fine Adj | Primary transfer adj. | I.5.6.5 Transfer Voltage Fine Adj |
| | 2nd Transfer Adj. | |
| Image Stabilization | Stabilization Only | I.5.6.6 Image Stabilization |
| | Image Stabilization Only | |
| Thick Paper Density Adjustment | | I.5.6.7 Thick Paper Density Adjustment |
| Paper Separation Adjustment | | I.5.6.8 Paper Separation Adjustment |
| Manual Toner Add | Manual Toner Add | I.5.6.9 Manual Toner Add |
| | Hopper Toner Filling | |
| Monochrome Density Adjustment | | I.5.6.10 Monochrome Density Adjustment |
| Grad/Dev AC Bias V Selection | | I.5.6.11 Grad/Dev AC Bias V Selection |
| Removable Voltage Adjust | | I.5.6.12 Removable Voltage Adjust |
| Charge AC Output fine adjustment | | I.5.6.13 Charge AC Output fine adjustment |

### 4.2.3 CS Remote Care

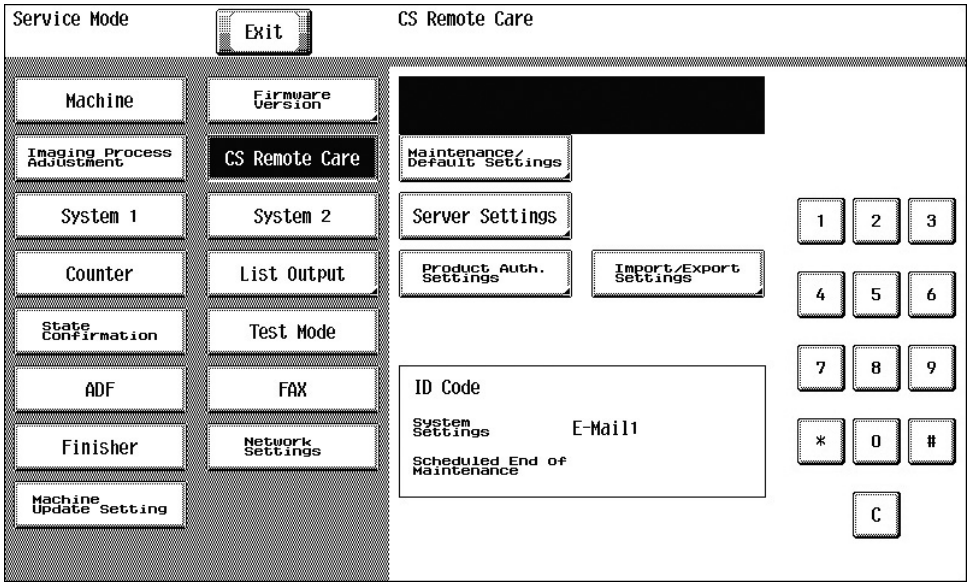


**NOTE**

- **After exiting Service Mode, you must turn OFF the main power switch. Turning ON the main power switch again after waiting 10 seconds makes the changes to the Service Mode setting take effect.**

| CS Remote Care | Ref. Page |
|---|---|
| Maintenance / Default Settings | I.5.14.1 Maintenance/Default Settings - System Selection |
| Maintenance Start | - |
| Maintenance Complete | - |
| Server Settings | I.5.14.4 Maintenance/Default Settings - Server Setting (E-Mail1 or E-mail2 is selected.)<br>I.5.14.5 Maintenance/Default Settings - Server Setting (http1 or http2 is selected) |
| Detail Setting | I.5.14.3 Maintenance/Default Settings - Detail Setting |
| Product Auth. Settings | I.5.14.6 Product Auth. Settings |
| Import/Export Settings | I.5.14.7 Import/Export Settings |

#### (1) Setting up the CS Remote Care

| CS Remote Care | | Ref. Page |
|---|---|---|
| Using the telephone line modem | | I.5.8.1 Using the telephone line modem |
| Using the fax line modem | | I.5.8.2 Using the Fax line modem |
| Using the E-mail | | I.5.8.3 Using the E-mail |
| When using a WebDAV server in http communication | http (bilateral communication) | I.5.8.4.(1) Bilateral communication |
| | http (unilateral communication: Device to Center) | I.5.8.4.(2) Unilateral communication: Device to Center |

#### (2) List of software SW for CS Remote Care

| SW No. | Functions | | Ref. page |
|---|---|---|---|
| 01 | Communication settings | Dial Mode | I.5.9.3 SW No. 01 |
| | | Line for send only | |
| | | Baud rate | |
| 02 | Auto call | Emergency transmission | I.5.9.4 SW No. 02 |
| | | Date specified transmission | |
| | | Call parts replace date | |
| | | Call drum replace date | |
| | | Call regular service date (PM) | |
| | | Auto call on the IC Life | |
| | | Auto call of the IR shortage | |
| | | Auto call on the zero reset of the fixed parts replacement | |

| SW No. | Functions | | Ref. page |
|---|---|---|---|
| 03 | Trouble display setting | Trouble display setting | I.5.9.5 SW No. 03 |
| | | Auto call on the toner empty | |
| | | Auto call on the waste toner bottle full | |
| 04 | CS Remote Care communication mode | | I.5.9.6 SW No. 04 |
| 05 | Modem redial interval | | I.5.9.7 SW No. 05 |
| 06 | Modem redial times | | I.5.9.8 SW No. 06 |
| 07 | Redial for response time out | | I.5.9.9 SW No. 07 |
| 08 | Retransmission interval on E-Mail/http delivery error | | I.5.9.10 SW No. 08 |
| 09 | Retransmission times on E-Mail/http delivery error | | I.5.9.11 SW No. 09 |
| 10 | Time zone settings | | I.5.9.12 SW No. 10 |
| 11 | Timer 1 | RING reception -> CONNECT reception | I.5.9.13 SW No. 11 |
| 12 | Timer 2 | Dial request completed -> CONNECT reception | I.5.9.14 SW No. 12 |
| 13 | Reservation | | - |
| 14 | Timer 4 | Line connection -> Start request telegram delivery | I.5.9.15 SW No. 14 |
| 15 | Timer 5 | Wait time for other side's response | I.5.9.16 SW No. 15 |
| 16 | Reservation | | - |
| 17 | Reservation | | - |
| 18 | Attention display | To set whether to give the alarm display when using the modem but the power for the modem is OFF. | I.5.9.17 SW No. 18 |
| 19 | Reservation | | - |
| 20 | Reservation | | - |
| 21 | Transmission of misfeed frequent occurrence warning | Transmission of paperbased misfeed frequent occurrence warning | I.5.9.18 SW No. 21 |
| | | Transmission of originalbased misfeed frequent occurrence warning | |
| | | Automatic transmission of chronological misfeed data at the time of transmission of misfeed frequent occurrence warning | |
| 22 | Paper-based misfeed frequent occurrence threshold value | | I.5.9.19 SW No. 22 |
| 23 | Original-based misfeed frequent occurrence threshold value | | I.5.9.20 SW No. 23 |
| 24 to 40 | Reservation | | - |

### 4.2.4 System 1

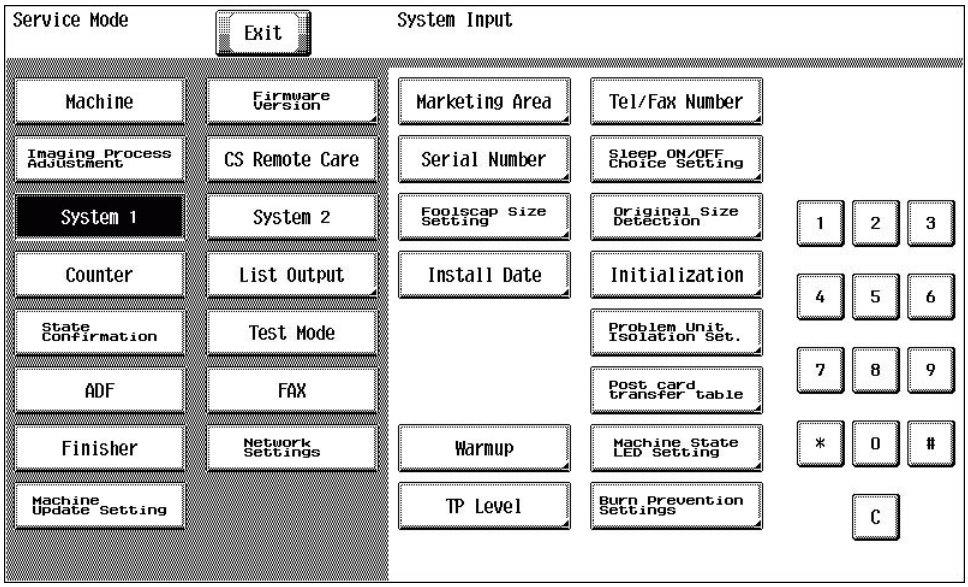


**NOTE**

- **After exiting Service Mode, you must turn OFF the main power switch. Turning ON the main power switch again after waiting 10 seconds makes the changes to the Service Mode setting take effect.**

| System 1 | Ref. Page |
|---|---|
| Marketing Area | I.5.15.1 Marketing Area |
| Tel/Fax Number | I.5.15.2 Tel/Fax Number |
| Serial Number | I.5.15.3 Serial Number |
| Sleep ON/OFF Choice Setting | I.5.15.4 Sleep ON/OFF Choice Setting |
| Foolscap Size Setting | I.5.15.5 Foolscap Size Setting |
| Original Size Detection | I.5.15.6 Original Size Detection |

| System 1 | | | Ref. Page |
|---|---|---|---|
| Install Date | | | I.5.15.7 Install Date |
| Initialization | Clear All Data | | I.5.15.8 Initialization-Clear All Data |
| | Clear Individual Data | Copy Program Data | I.5.15.9.(1) Copy Program Data |
| | | Address Registration Data | I.5.15.9.(2) Address Registration Data |
| | | Fax Setting Data | I.5.15.9.(3) Fax Setting Data |
| | | All History Data | I.5.15.9.(4) All History Data |
| | | Network Setting Data | I.5.15.9.(5) Network Setting Data |
| | | Server Cache Data | I.5.15.9.(6) Server Cache Data |
| | System Error Clear | | I.5.15.10 Initialization-System Error Clear |
| Problem Unit Isolation Set. | | | I.5.15.11 Problem Unit Isolation Set. |
| Post card transfer table | | | I.5.15.12 Post card transfer table |
| Warm-up | | | I.5.15.13 Warm-up |
| Machine State LED Setting | | | I.5.15.14 Machine State LED Setting |
| TP Level | | | I.5.15.15 TP Level |
| Burn Prevention Settings | | | I.5.15.16 Burn Prevention Settings |

### 4.2.5 System 2

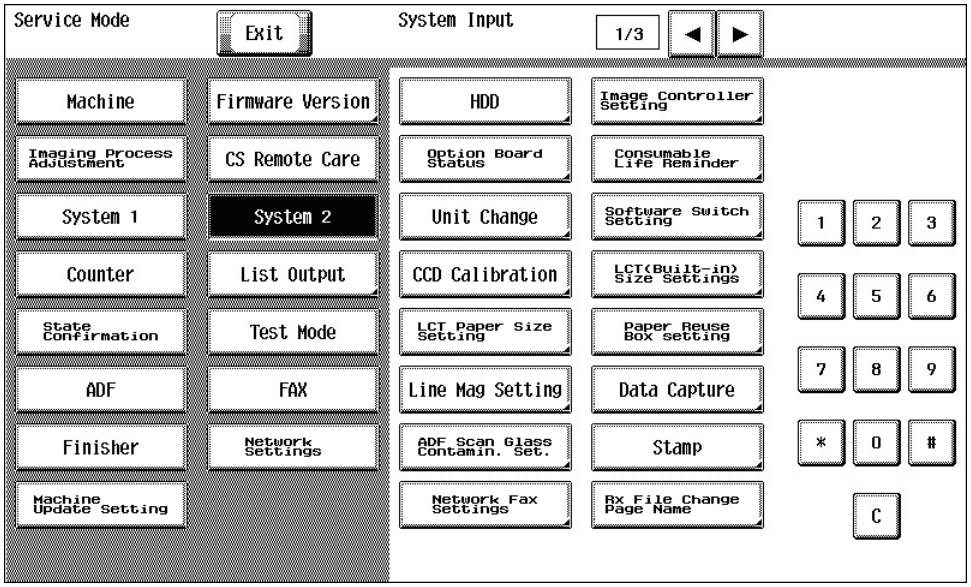


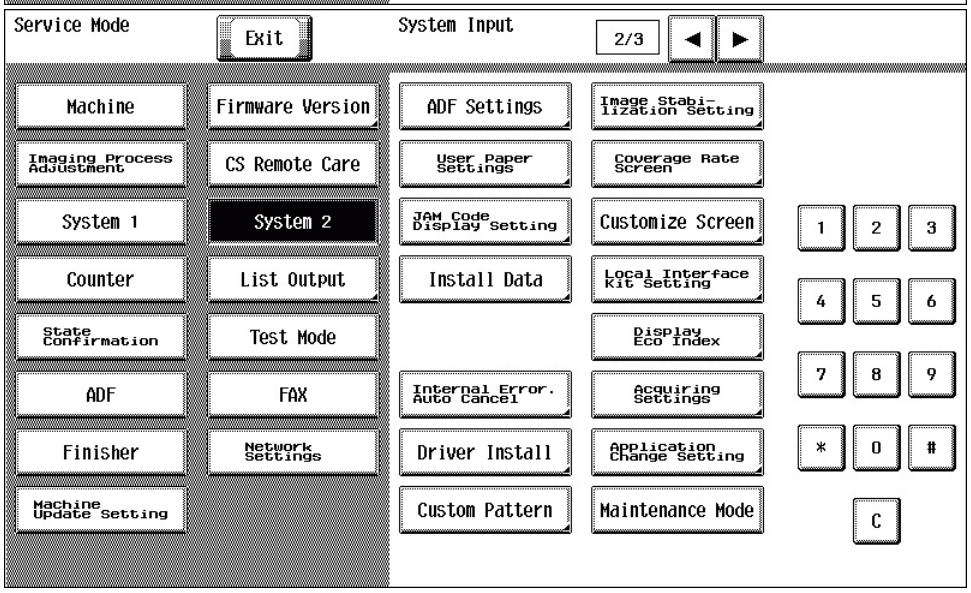

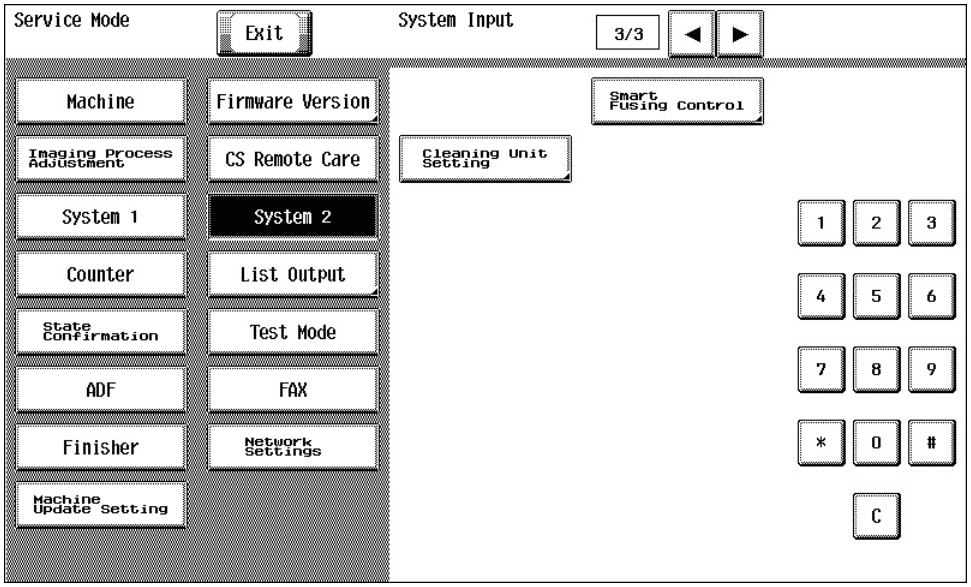


**NOTE**

- **After exiting Service Mode, you must turn OFF the main power switch. Turning ON the main power switch again after waiting 10 seconds makes the changes to the Service Mode setting take effect.**

| System 2 | | Ref. Page |
|---|---|---|
| HDD | | I.5.16.1 HDD |
| Image Controller Setting | | I.5.16.2 Image Controller Setting |
| Option Board Status | | I.5.16.3 Option Board Status |
| Consumable Life Reminder | | I.5.16.4 Consumable Life Reminder |
| Unit Change | | I.5.16.5 Unit Change |
| Software Switch Setting | | I.5.16.6 Software Switch Setting |
| CCD Calibration | | I.5.16.7 CCD Calibration |
| LCT (Built-in) Size Settings | | I.5.16.8 LCT (Built-in) Size Settings |
| LCT Paper Size Setting | | I.5.16.9 LCT Paper Size Setting |
| Paper Reuse Box Setting | | I.5.16.10 Paper Reuse Box Setting |
| Line Mag Setting | | I.5.16.11 Line Mag Setting |
| Data Capture | | I.5.16.12 Data Capture |
| ADF Scan Glass Contamin. Set. | | I.5.16.13 Line Detection |
| Stamp | | I.5.16.14 Stamp |
| Network Fax Settings | | I.5.16.15 Network Fax Settings |
| RX File Change Page Name | | I.5.16.16 RX File Change Page Name |
| ADF Settings | | I.5.16.17 ADF Settings |
| Image Stabilization Setting | | I.5.16.18 Image Stabilization Setting |
| User Paper Settings | | I.5.16.19 User Paper Settings |
| Coverage Rate Screen | | I.5.16.20 Coverage Rate Screen |
| JAM Code Display Setting | | I.5.16.21 JAM Code Display Setting |
| Customize Screen | BootUp Screen | I.5.16.22.(1) BootUp Screen |
| | Machine Image | I.5.16.22.(2) Machine Image |
| Install Data | | I.5.16.23 Install Data |
| Local Interface Kit Setting | | I.5.16.24 Local Interface Kit Setting |
| CIS Image Adjustment *1 | | I.5.16.25 CIS Image Adjustment |
| Display Eco Index | | I.5.16.26 Display Eco Index |
| Internal Error. Auto Cancel | | I.5.16.27 Internal Error. Auto Cancel |
| Acquiring Settings | | I.5.16.28 Acquiring Settings |
| Driver Install | | I.5.16.29 Driver Install |
| Application Change Setting | | I.5.16.30 Application Change Setting |
| Custom Pattern | | I.5.16.31 Custom Pattern |
| Maintenance Mode | | I.5.16.32 Maintenance Mode |
| Smart Fusing Control | | I.5.16.33 Smart Fusing Control |
| Cleaning Unit Setting | | I.5.16.34 Cleaning Unit Setting |

*1: It will be displayed only when the optional dual scan document feeder DF-704 is mounted.

### 4.2.6 Counter

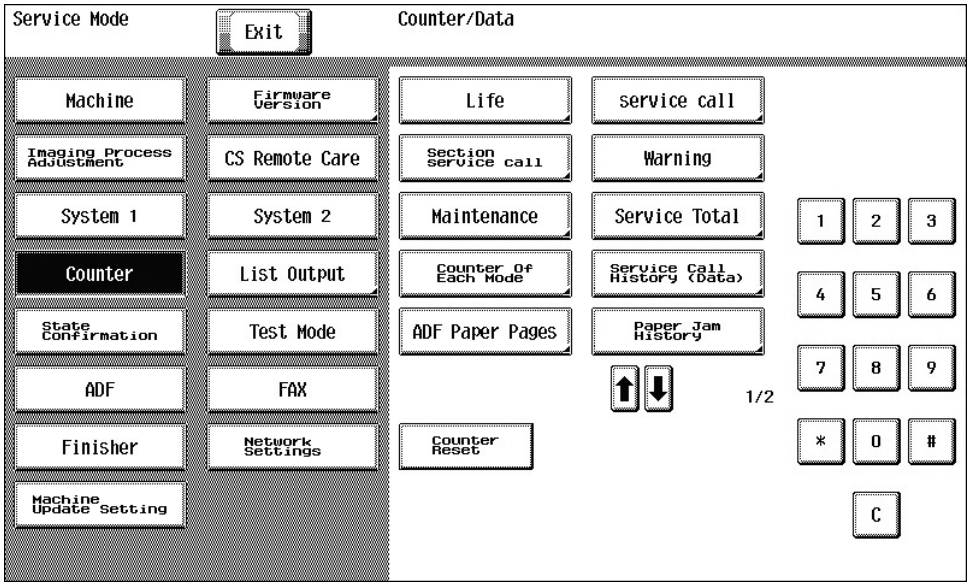


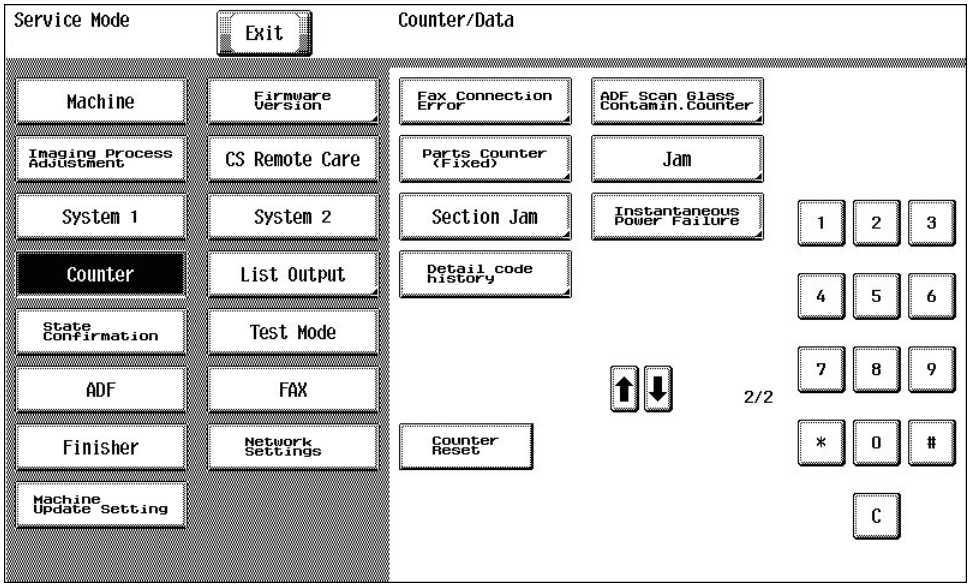


**NOTE**

- **After exiting Service Mode, you must turn OFF the main power switch. Turning ON the main power switch again after waiting 10 seconds makes the changes to the Service Mode setting take effect.**

| Counter | Ref. Page |
|---|---|
| Life | I.5.17.2 Life |
| Service Call | I.5.17.3 Service Call |
| Section Service Call | I.5.17.4 Section Service Call |
| Warning | I.5.17.5 Warning |
| Maintenance | I.5.17.6 Maintenance |
| Service Total | I.5.17.7 Service Total |
| Counter Of Each Mode | I.5.17.8 Counter of Each Mode |
| Service Call History (Data) | I.5.17.9 Service Call History (Data) |
| ADF Paper Pages | I.5.17.10 ADF Paper Pages |
| Paper Jam History | I.5.17.11 Paper Jam History |
| Fax Connection Error | I.5.17.12 Fax Connection Error |
| ADF Scan Glass Contamin. Counter | I.5.17.13 ADF Scan Glass Contamin. Counter |
| Parts Counter (Fixed) *1 | I.5.17.14 Parts Counter (Fixed) |
| Jam | I.5.17.15 Jam |
| Section JAM | I.5.17.16 Section JAM |
| Instantaneous Power Failure | I.5.17.17 Instantaneous Power Failure |
| Detail code history | I.5.17.18 Detail code history |
| Counter Reset | - |

*1: It will be displayed only when the optional finisher FS-533 or FS-534 is mounted.

### 4.2.7 List Output

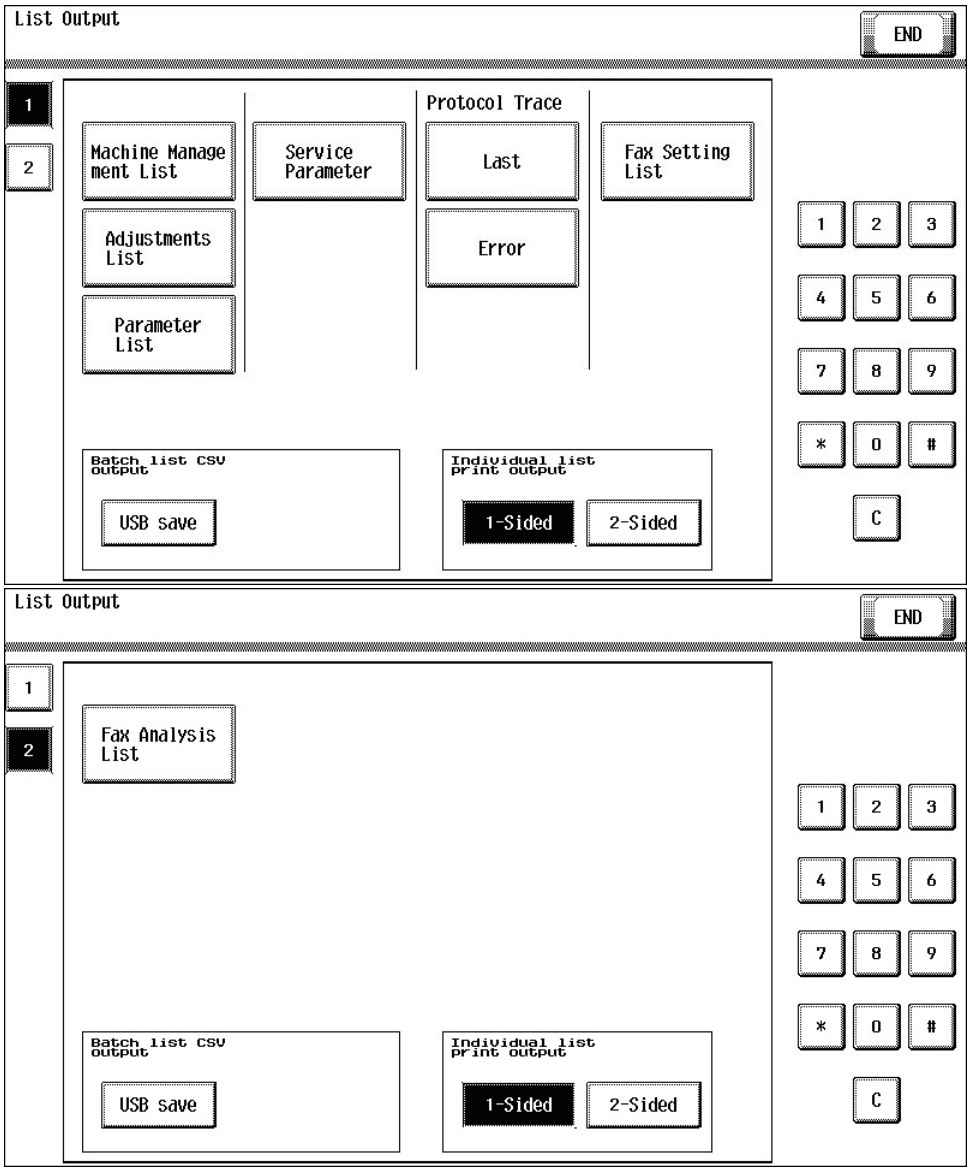


**NOTE**

- **After exiting Service Mode, you must turn OFF the main power switch. Turning ON the main power switch again after waiting 10 seconds makes the changes to the Service Mode setting take effect.**

| List Output | | Ref. Page |
|---|---|---|
| Batch list CSV output | | I.5.18.1 Batch list CSV output |
| Individual list print output | | - |
| Machine Management List | | I.5.18.2 Machine Management List |
| Adjustments List | | I.5.18.3 Adjustments List |
| Parameter List | | I.5.18.4 Parameter List |
| Service Parameter | | I.5.18.5 Service Parameter |
| Protocol Trace | Last | I.5.18.6 Protocol Trace |
| | Error | |
| Fax Setting List | | I.5.18.7 Fax Setting List |
| Fax Analysis List | | I.5.18.8 Fax Analysis List |

### 4.2.8 State Confirmation

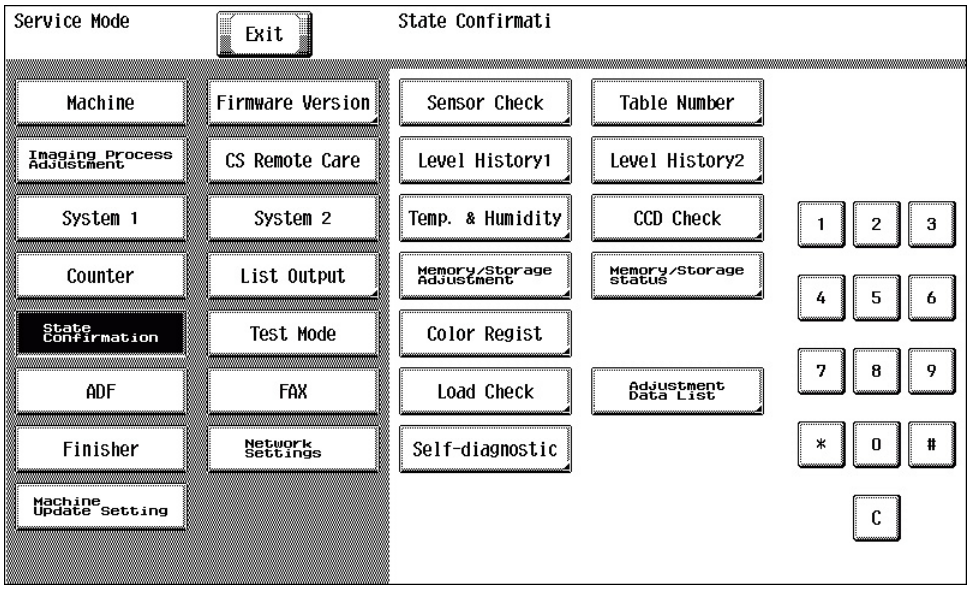


**NOTE**

- **After exiting Service Mode, you must turn OFF the main power switch. Turning ON the main power switch again after waiting 10 seconds makes the changes to the Service Mode setting take effect.**

| State Confirmation | | Ref. Page |
|---|---|---|
| Sensor Check | | I.5.19.1 Sensor Check |
| Table Number | | I.5.19.2 Table Number |
| Level History1 | | I.5.19.3 Level History 1 |
| Level History2 | | I.5.19.4 Level History 2 |
| Temp. & Humidity | | I.5.19.5 Temp. & Humidity |
| CCD Check | | I.5.19.6 CCD Check |
| Memory/Storage Adjustment | Memory Check | I.5.19.7.(1) Memory Check |
| | Compress / Decompression Check | I.5.19.7.(2) Compress / Decompression Check |
| | Memory Bus Check | I.5.19.7.(3) Memory Bus Check |
| | DSC Bus Check | I.5.19.7.(4) DSC Bus Check |
| | Storage R/W Check | I.5.19.7.(5) Storage R/W Check |
| | Format | I.5.19.7.(6) Format |
| | eMMC -> HDD Data Copy | I.5.19.7.(7) eMMC -> HDD Data Copy |
| Memory/Storage Status | | I.5.19.8 Memory/Storage Status |
| Color Regist | | I.5.19.9 Color Regist |
| Load Check | | I.5.19.10 Load Check |
| Adjustment Data List | | I.5.19.11 Adjustment Data List |
| Self-diagnostic | | I.5.19.12 Self-diagnostic |

### 4.2.9 Test Mode

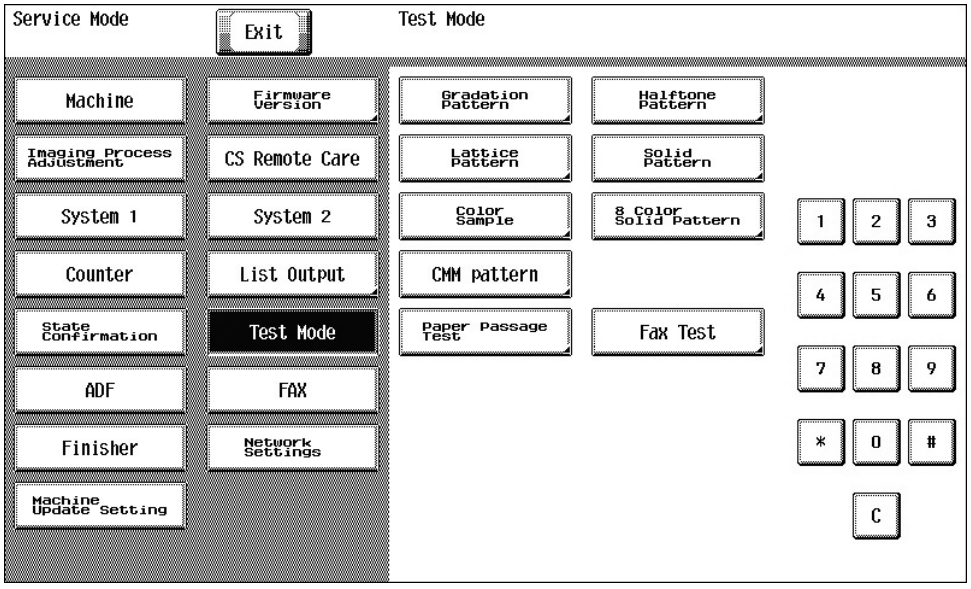

**NOTE**

- **After exiting Service Mode, you must turn OFF the main power switch. Turning ON the main power switch again after waiting 10 seconds makes the changes to the Service Mode setting take effect.**

| Test Mode | Ref. Page |
|---|---|
| Gradation Pattern | I.5.20.2 Gradation Pattern |
| Halftone Pattern | I.5.20.3 Halftone Pattern |
| Lattice Pattern | I.5.20.4 Lattice Pattern |
| Solid Pattern | I.5.20.5 Solid Pattern |
| Color Sample | I.5.20.6 Color Sample |
| 8 Color Solid Pattern | I.5.20.7 8 Color Solid Pattern |
| CMM pattern | I.5.20.8 CMM pattern |
| Paper Passage Test | I.5.20.9 Paper Passage Test |
| Fax Test * | I.5.20.10 Fax Test-Signal Send Test<br>I.5.20.11 Fax Test-Signal Receive Test<br>I.5.20.12 Fax Test-NCU TEST |

*: It will be displayed only when the optional fax kit FK-514 is mounted.

### 4.2.10 ADF

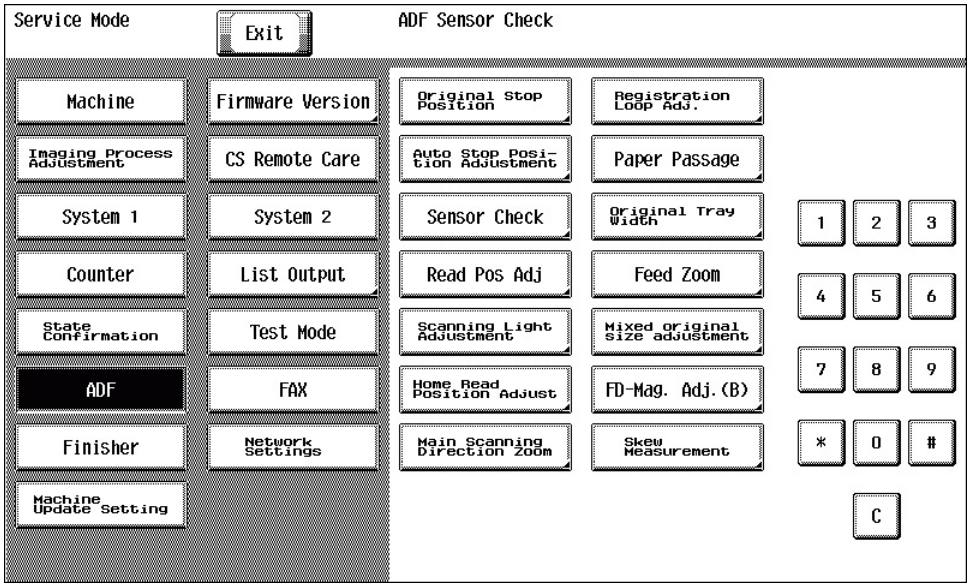


**NOTE**

- **After exiting Service Mode, you must turn OFF the main power switch. Turning ON the main power switch again after waiting 10 seconds makes the changes to the Service Mode setting take effect.**

| ADF Adjustment | | Ref. Page |
|---|---|---|
| Original Stop Position | | I.5.21.1 Original Stop Position |
| Registration Loop Adj. | | I.5.21.2 Registration Loop Adj. |
| Auto Stop Position Adjustment | | I.5.21.3 Auto Stop Position Adjustment |
| Paper Passage | | I.5.21.4 Paper Passage |
| Sensor Check | | I.5.21.5 Sensor Check |
| Original Tray Width | | I.5.21.6 Original Tray Width |
| Read Pos Adj | Read Pos Adj | I.5.21.7 Read Pos Adj |
| | Auto Adjust | |
| Feed Zoom | Orig. Feed Zoom Ad | I.5.21.8 Feed Zoom |
| | Auto Adjust | |
| Scanning Light Adjustment | | I.5.21.9 Scanning Light Adjustment |
| Mixed original size adjustment | | I.5.21.10 Mixed original size adjustment |
| Home Read Position Adjust *1 | | I.5.21.11 Home Read Position Adjust |
| FD-Mag. Adj. (B) | Orig. Feed Zoom Ad | I.5.21.12 FD-Mag. Adj. (B) |
| | Auto Adjust | |
| Main Scanning Direction Zoom *1 | Main scanning direction zoom adj *1 | I.5.21.13 Main Scanning Direction Zoom |
| | Auto Adjust *1 | |
| Skew Measurement | DFSkew (Front) | I.5.21.14 Skew Measurement |
| | DFSkew (Back) *1 | |

*1: It will be displayed only when the optional dual scan document feeder DF-704 is mounted.

### 4.2.11 FAX

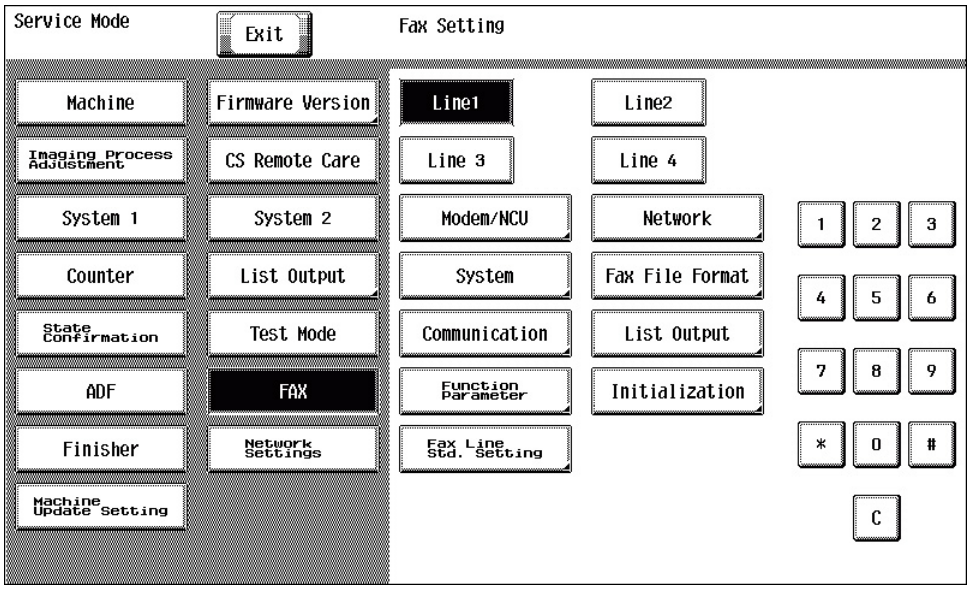


**NOTE**

- **After exiting Service Mode, you must turn OFF the main power switch. Turning ON the main power switch again after waiting 10 seconds makes the changes to the Service Mode setting take effect.**

| FAX | | Ref. Page |
|---|---|---|
| Line 1 *1 | Modem/NCU *1 | I.5.22.1 Modem/NCU |
| | Network *1 | I.5.22.2 Network |
| | System *1 | I.5.22.3 System |
| | Fax File Format *1 | I.5.22.4 Fax File Format |
| | Communication *1 | I.5.22.5 Communication |
| | List Output *1 | I.5.22.6 List Output |
| | Function Parameter *1 | I.5.22.7 Function Parameter |
| | Initialization *1 | I.5.22.8 Initialization |
| | FAX Line Std. Setting | I.5.22.9 FAX Line Std. Setting |
| Line 2 *2<br>Line 3 *3<br>Line 4 *4 | Modem/NCU *2 *3 *4 | I.5.23.1 Modem/NCU |
| | Network *2 *3 *4 | I.5.23.2 Network |
| | Communication *2 *3 *4 | I.5.23.3 Communication |
| | Initialization *2 *3 *4 | I.5.23.4 Initialize |
| | FAX Line Std. Setting | I.5.23.5 FAX Line Std. Setting |

*1: It will be displayed only when [Service Mode] -> [System 2] -> [Option Board Status] shows that FAX (circuit 1) is set to “Set”.
*2: It will be displayed only when [Service Mode] -> [System 2] -> [Option Board Status] shows that FAX (circuit 2) is set to “Set”.
*3: It will be displayed only when [Service Mode] -> [System 2] -> [Option Board Status] shows that FAX (circuit 3) is set to “Set”.
*4: It will be displayed only when [Service Mode] -> [System 2] -> [Option Board Status] shows that FAX (circuit 4) is set to “Set”.

### 4.2.12 Finisher

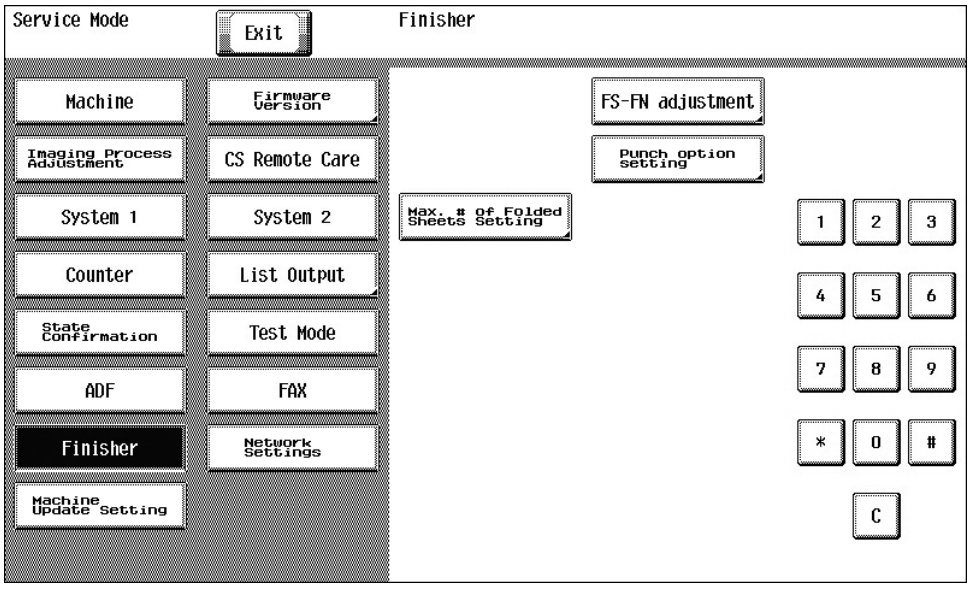

**NOTE**

- **After exiting Service Mode, you must turn OFF the main power switch. Turning ON the main power switch again after waiting 10 seconds makes the changes to the Service Mode setting take effect.**

| Finisher | | Ref. Page |
|---|---|---|
| FS-FN adjustment *1 | Center Staple Position *2 | I.5.29.1 FS-FN adjustment - Center Staple Position |
| | Half-Fold Position *2 | I.5.29.2 FS-FN adjustment - Half-Fold Position |
| | 1st Tri-Fold Adjustment *2 | I.5.29.3 FS-FN adjustment - 1st Tri-Fold Adjustment/ 2nd Tri-Fold Adjustment |
| | 2nd Tri-Fold Adjustment *2 | |
| | Punch Edge Adj. *3 | I.5.29.4 FS-FN adjustment - Punch Edge Adj |
| | Punch Regist Loop Size *6 | I.5.29.5 FS-FN adjustment - Punch Regist Loop Size |
| | Finisher Components Test Mode *1 | I.5.29.6 FS-FN adjustment - Finisher Components Test Mode |
| | Alignment Plate Position *4 | I.5.29.7 FS-FN adjustment - Alignment plate Position |
| | Paper Alignment Guides W. Adj. *2 | I.5.29.8 FS-FN adjustment - Paper Alignment Guides W. Adj. |
| Punch option setting *1 | | I.5.29.9 Punch Option Setting |
| Max. # of Folded Sheets Setting *7 | | I.5.29.10 Max. # of Folded Sheets Setting |
| Job Separator *5 | | I.5.29.11 Job Separator |

*1: It will be displayed only when the optional finisher FS-533, FS-534 or FS-534SD is mounted.
*2 It will be displayed only when the optional finisher FS-534SD is mounted.
*3: It will be displayed only when the optional punch kit PK-520 is mounted.
*4: It will be displayed only when the optional finisher FS-533 is mounted.
*5: It will be displayed only when the optional job separator JS-506 is mounted.
*6: It will be displayed only when the optional punch kit PK-519 or PK-520 is mounted.
*7: It will be displayed only when the optional finisher FS-534 or FS-534SD is mounted.

### 4.2.13 Network Settings

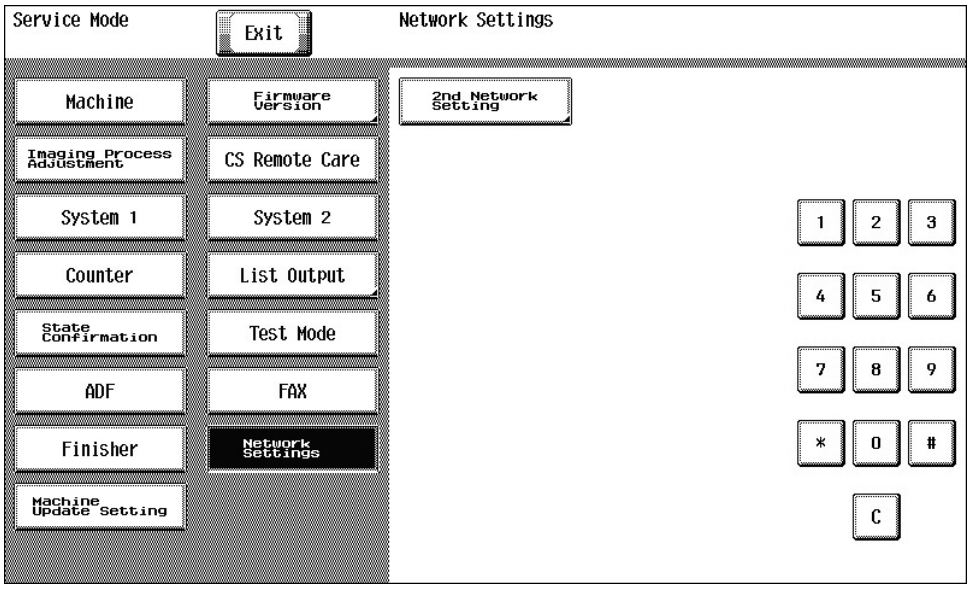


**NOTE**

- **After exiting Service Mode, you must turn OFF the main power switch. Turning ON the main power switch again after waiting 10 seconds makes the changes to the Service Mode setting take effect.**

| Network Settings | Ref. Page |
|---|---|
| 2nd Network Setting *1 | I.5.30.1 2nd Network Setting - 2nd network card settings |

*1: This is displayed only when the optional upgrade kit UK-212 is installed.

### 4.2.14 Machine Update Setting

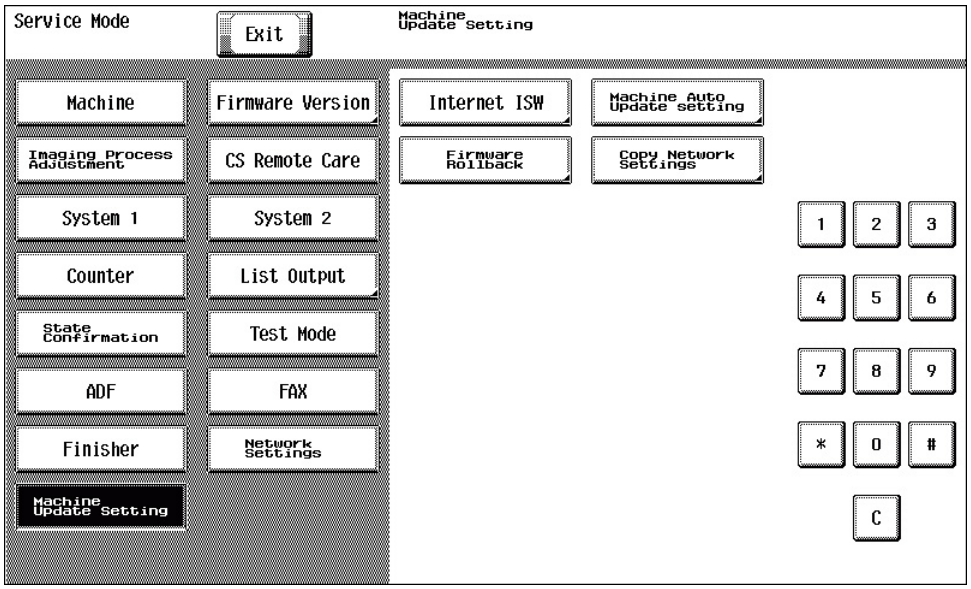


**NOTE**

- **After exiting Service Mode, you must turn OFF the main power switch. Turning ON the main power switch again after waiting 10 seconds makes the changes to the Service Mode setting take effect.**

| Machine Update Setting | | | Ref. Page |
|---|---|---|---|
| Internet ISW | Internet ISW Set | Function Setting | I.5.31.1 Internet ISW - Internet ISW Set |
| | | Open Mode Settings | |
| | HTTP Setting *1 | | I.5.31.2 Internet ISW - HTTP Setting |
| | FTP Setting *1 | | I.5.31.3 Internet ISW - FTP Setting |
| | Forwarding Access Setting *1 | | I.5.31.4 Internet ISW - Forwarding Access Setting |
| | Download *1 | | I.5.31.5 Internet ISW - Download |
| | Update Start Time Settings *1 | | I.5.31.6 Internet ISW - Update Start Time Settings |
| Machine Auto Update setting | Auto Update setting | | I.5.31.7 Machine Auto Update setting - Auto Update setting |
| | Relay server setting | | I.5.31.8 Machine Auto Update setting - Relay server setting |
| | Transmission log Update | | I.5.31.9 Machine Auto Update setting - Transmission log Update |
| | Transmission Server Log | | I.5.31.10 Machine Auto Update setting - Transmission Server Log |
| | Update Log Display | | I.5.31.11 Machine Auto Update setting - Update Log Display |
| | Relay Server Log Confirmation | | I.5.31.12 Machine Auto Update setting - Relay Server Log Confirmation |
| | Manually Update | | I.5.31.13 Machine Auto Update setting - Manual Update |
| | Machine Export setting | | I.5.31.14 Machine Auto Update setting - Machine Export setting |
| | Machine Update Password | | I.5.31.15 Machine Auto Update setting - Machine Update Password |
| Firmware Rollback | Firmware Rollback | | I.5.31.16.(1) Firmware Rollback |
| | Open Mode Settings | | I.5.31.16.(2) Open Mode Settings |
| Copy Network Settings | | | I.5.31.17 Copy Network Settings |

*1: To be displayed only when the following setting is set to “ON”. [Machine Update Setting] -> [Internet ISW] -> [Internet ISW set] -> [Function Setting]

# 5. SERVICE MODE

## 5.1 Starting/Setting/Exiting

### 5.1.1 Starting procedure

**NOTE**

- **Ensure appropriate security for Service Mode function setting procedures. They should NEVER be shown to any unauthorized person not involved with service jobs.**

#### (1) Procedure

1. Touch Menu.
2. Touch [Counter].
3. Touch [Display Keypad].
4. Press the following keys in this order.
   - Stop -> 0 -> 0 -> Stop -> 0 -> 1
5. Enter the CE password and touch [END].
   (The CE password is initially set to "9272927292729272.")
   **NOTE**
   - **When [Administrator Settings] -> [Security Settings] -> [Enhanced Security Mode] is set to "ON", CE password authentication is necessary.**
   - **If a wrong CE password is entered, re-enter the right password.**
     **The machine will not enter Service Mode unless the CE password is entered correctly. To return to the basic screen, turn OFF the main power switch and turn it ON again.**
   - **When [Administrator Settings] -> [Security Settings] -> [Security Details] -> [Prohibited Functions When Authentication Error] is set to "Mode 2", operation will be prohibited since it indicates authentication failure by failing to enter the correct CE password within the specified number of times.**
     **If the access lock is activated, the lock release timer starts to operate by input the Stop -> 0 -> 9 -> 3 -> 1 -> 7 in Menu -> [Counter] -> [Print List] -> [Display Keypad] after the main power switch is turned OFF and On.**
     **When the timer reaches the time specified in this setting, the access lock is released.**
   - **The service code entered is displayed as " * "**
6. The Service Mode menu will appear.

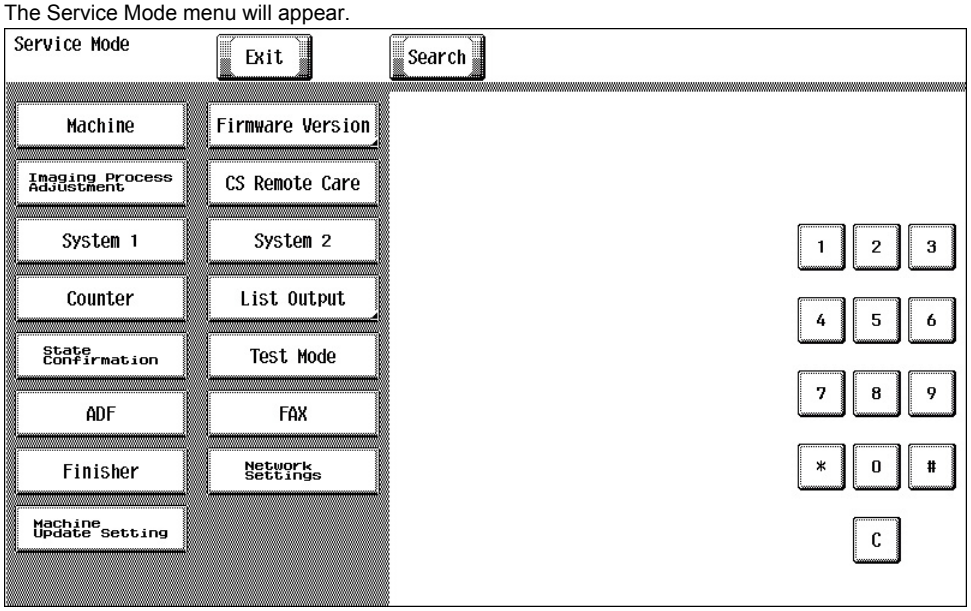


**NOTE**

- **Be sure to change the CE password from its default value.**
- **For the procedure to change the CE password, see the "I.7.3.1 CE Password."**
- **NEVER forget the CE password.**

### 5.1.2 Setting procedure

1. Press the key corresponding to the function you would like to change the setting for. Keys or setting screens will appear for each function.

Ex.: System 1

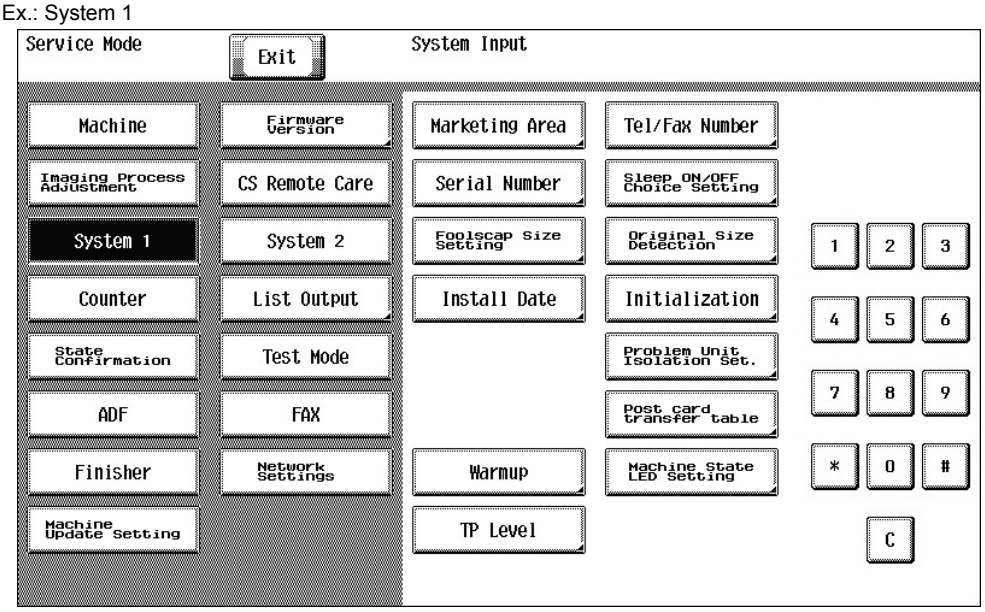


2. Press the key for the item that you would like to change the setting for. Setting screens will appear for each item.
Ex.: Install Date

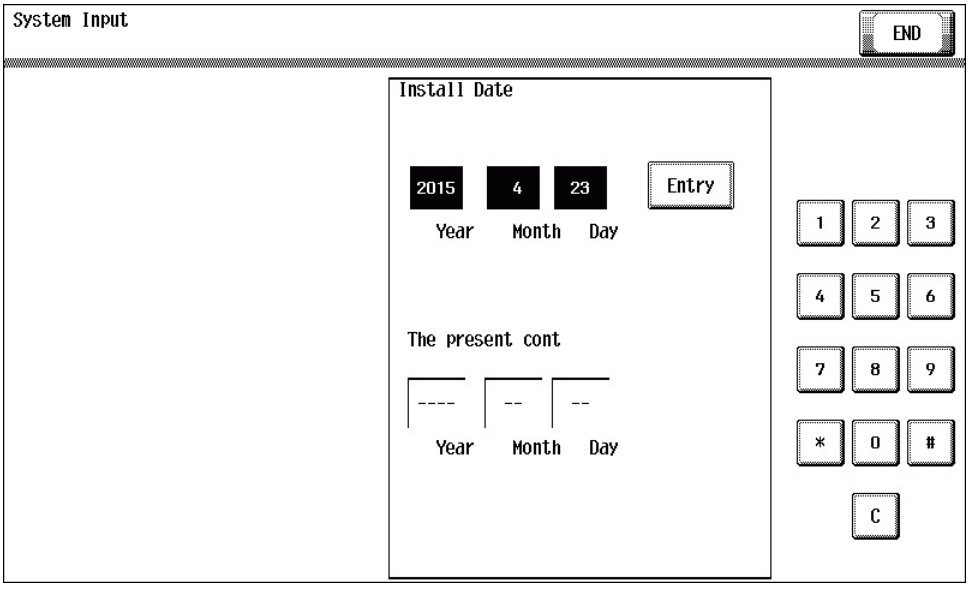


3. Press the key for the setting you would like to change. You can also input the numerical value using the 10-key pad. (the [+]/[-] keys can also be used for settings. Follow the directions on the screen to input numerical values.)
**NOTE**
- **For more details, see the description pages for each setting item.**
  **I.4.1 List of service mode (outline)**

4. Touch [END]. This closes the setting screen and returns to the Service Mode screen. (If deep within the hierarchy of the setting screen, it may be necessary to touch [END] several times)
5. Touch [Exit]. This will close the Service Mode screen and exit the Service Mode.
6. Turn OFF the main power switch. After waiting 10 seconds, turn ON the main power switch again. Turning the main power switch OFF and then ON again makes the changes to the Service Mode setting take effect.
**NOTE**
- **Simply exiting the Service Mode will not make the changed settings take effect. You must turn the main power switch OFF and then ON again.**

### 5.1.3 Exiting procedure

1. Touch [Exit] on the Service Mode screen.
2. Turn OFF the main power switch. Wait 10 seconds, then turn ON the main power switch again.

## 5.2 Time Zone/Date & Time Input mode

### 5.2.1 Use

- This mode is used to set time-of-day and date.
- The set time zone/date & time are automatically reflected in the date and time setting of Administrator Settings.

| | |
|---|---|
| Time Zone Setting | Set the time zone applicable to the area.<br>After the setting, touch [Entry] and then [Apply] to validate the time. |

| | |
|---|---|
| | The following lists settings of time zones of different areas.<br>-08:00: U.S.: Pacific Standard Time<br>-06:00: U.S.: Central Standard Time<br>-05:00: U.S.: Eastern Standard Time<br>-00:00: England: Greenwich mean time<br>+01:00: Western European countries<br>+08:00: China, Taiwan, western part of Australia<br>+09:00: Japan, Korea |
| Date & Time Setting | Enter the time from the 10-key pad to set the time-of-day.<br>Before making any entry, first press Clear.<br>After the time has been set, touch [Entry] and then [Apply]. |

### 5.2.2 Procedure

1. Call the Service Mode to the screen.
2. Press the following keys in this order.
   - Stop -> 1 -> 1 -> 4 -> 4 -> Clear
3. Enter time zone year, month, day, hour, and minute, in that order, from 10-key pad.
   **NOTE**
   - **Before entering date and time, touch Clear to delete the present time from the place where data and time is entered.**
   - **When setting the month, day, hour, or minute, enter "0" first if the data one digit.**
4. Make sure that the correct value has been entered, then touch [Entry] and then [Apply].
5. After the confirmation screen appears, touch [OK].

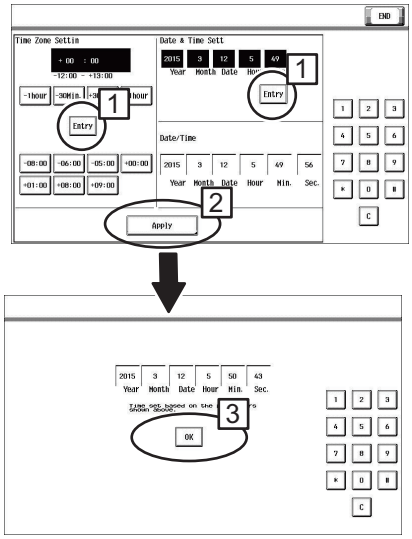


## 5.3 Search

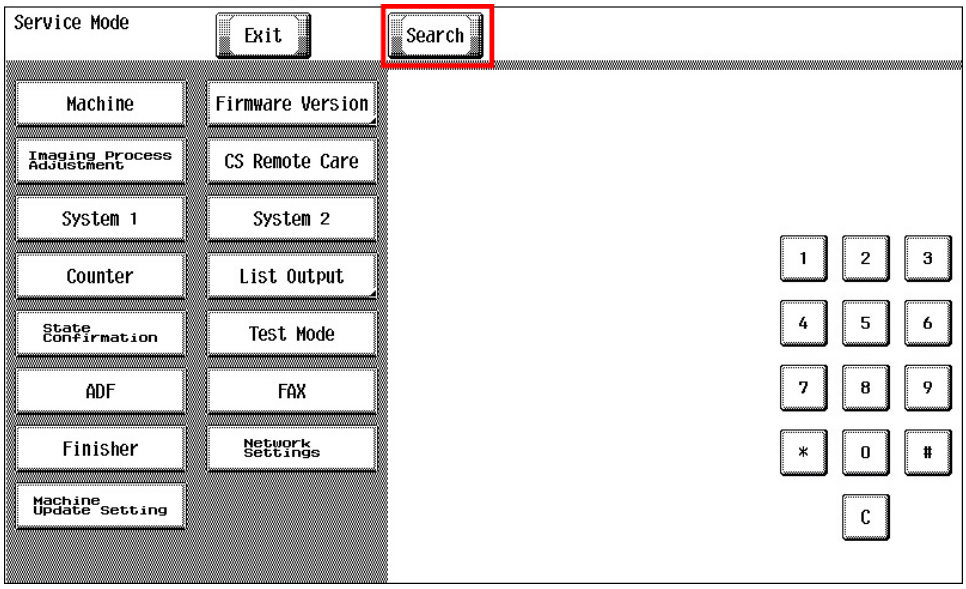


### 5.3.1 Use

- Searches parameters that include the entered keyword.
- You can display the function screen from the search results.

### 5.3.2 Procedure

1. Touch [Search] at the top of the service mode screen.
2. Enter the desired search keyword.
3. Touch [END].
4. Select the desired function from the displayed search results and touch [Start].
5. The screen for the selected function displays.

## 5.4 Machine

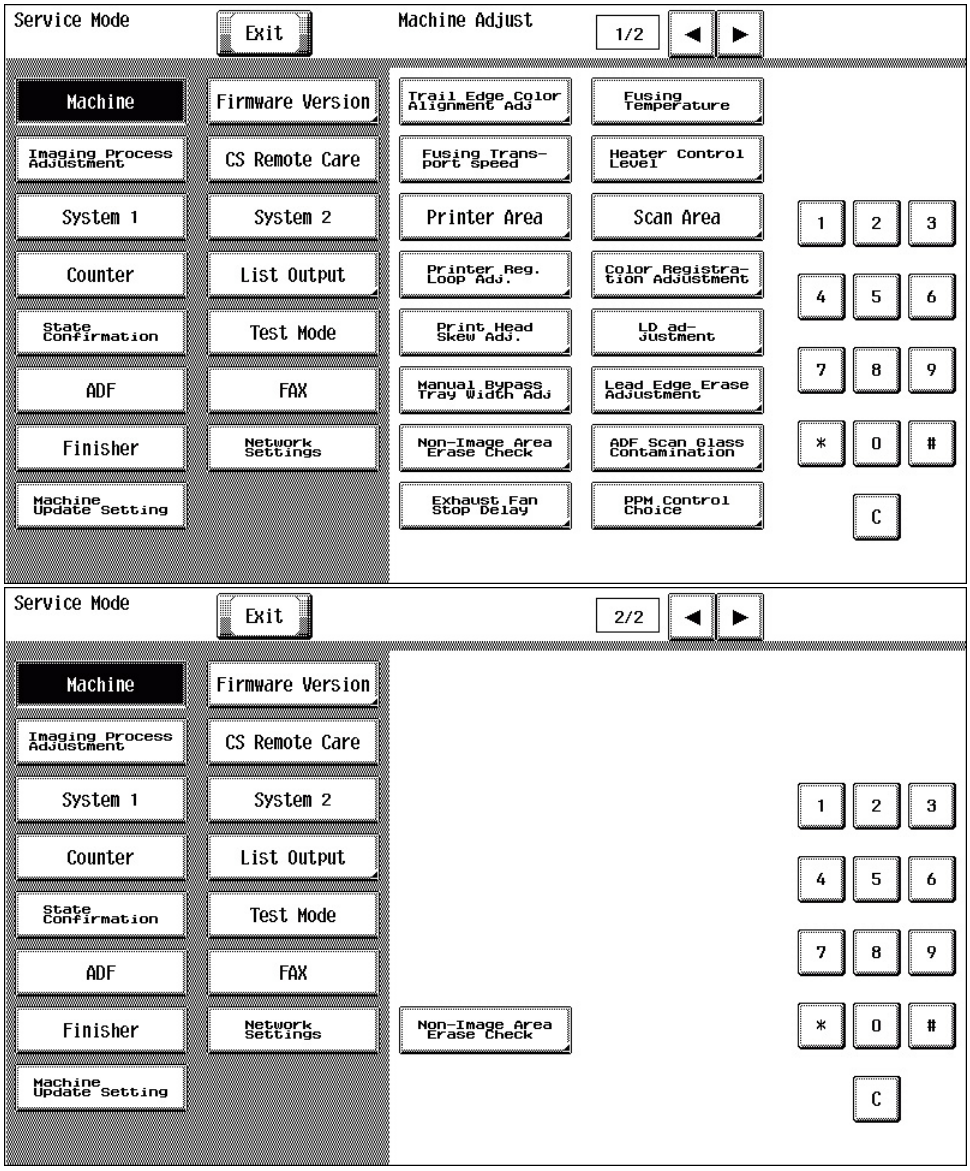


### 5.4.1 Trail Edge Adjust

#### (1) Use

- To adjust color shift if color shift is found at the trailing edge of either plain paper or thick paper by the comparison of originals and their output.
- Uses this function when color shift occurs at the trailing edge of images.
- Able to make a setting on a process speed basis independently for each paper type of Normal/Thin Paper, Thick 1/1+ and Thick 2/3/4.

#### (2) Default setting

- 0

#### (3) Procedure

1. Call the Service Mode to the screen.
2. Touch these keys in this order: [Machine] -> [Trail Edge Color Alignment Adj].
3. Load manual bypass tray with A3/11 x 17 or A4/8 1/2 x 11 plain paper.
4. Select the paper type to be adjusted.
5. Press the Start key.
6. Using the printed test pattern, check color shift in the sub scan direction on both leading and trailing edge areas. If color shift is found only around the trailing edge, perform the following adjustment.
   (If color shift is found on both areas, perform [Color Registration Adjustment].)
7. Using the [+] / [-] key, change the setting value as necessary.

- If the cross deviates in the direction of A, increase the setting. (Decrease paper transport speed.)
- If the cross deviates in the direction of B, decrease the setting. (Increase paper transport speed.)

8. Produce another test pattern and make sure that there is no deviation.

Check Procedure

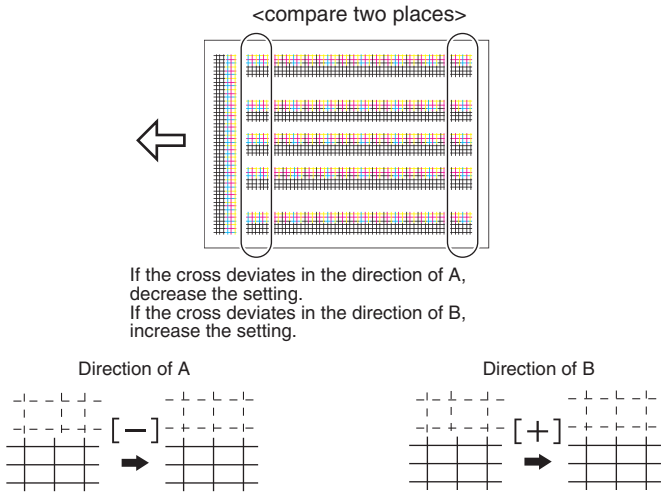


### 5.4.2 Fusing Temperature

#### (1) Use

- To adjust individually the temperature of the heating roller for each type of paper, thereby coping with varying fusing performance under changing environmental conditions.
- When fusing performance is poor, or wax streak or offset occurs when the type of paper is changed or environmental conditions change.
- Use when the curling of the paper due to the paper type or environmental change occurred, or when the paper jam, as well as stapling or folding position error occurred due to the curling of the paper.
- By setting the temperature higher (+), gloss of print can be improved.
- By setting the temperature lower (-), exit roller mark can be reduced.

#### (2) Adjustment range

| Paper type | Setting range | Step |
|---|---|---|
| Plain Paper | -20 °C to +10 °C | 5 °C |
| Thin Paper | | |
| OHP Film | | |
| Thick 1 | | |
| Thick 1+ | | |
| Thick 2 | | |
| Thick 3 | | |
| Thick 4 | | |
| Post. | | |
| Enve. | -10 °C to +20 °C | |
| Recycled | -20 °C to +10 °C | |

#### (3) Procedure

1. Call the Service Mode to the screen.
2. Touch these keys in this order: [Machine] -> [Fusing Temperature].
3. Select the paper type.
4. Enter the new setting from the [+] / [-] key.
   - If fusing performance is poor, increase the setting.
   - If wax streaks occur, decrease the setting.
   - If offset is poor, decrease the setting.
   - If curling of the paper occurs, decrease the setting.
5. Touch [END].
6. Return to the basic screen.
7. Output two or three test patterns and check to see whether the image has any problem.
8. Make the adjustment for each type of paper.

### 5.4.3 Fusing Transport Speed

#### (1) Use

- To adjust the speed of the fusing motor so as to match the fusing speed with transport speed.
- Brush effect or blurred image is evident as a result of changes in environmental conditions or degraded durability.

#### (2) Adjustment range

| Paper type | Setting range | Step |
|---|---|---|
| Plain Paper /Thin Paper | -20 to +20 | 1 |
| Thick 1-4 | | |

#### (3) Procedure

1. Call the Service Mode to the screen.
2. Touch these keys in this order: [Machine] -> [Fusing Transport Speed].
3. Select a processing speed for the mode where a brush effect or a blurred image occurred.
4. Enter the new setting from the 10-key pad.
   - If brush effect is evident, vary the setting value and check for image.
   - If a blurred image occurs, decrease the setting.
5. Touch [END].
6. Return to the basic screen.
7. Check the print image for any image problem.

### 5.4.4 Heater Control Level

#### (1) Use

- The fluorescent lamp connected to the same power source as the MFP may flicker due to the fusing heater lamp switching On/Off.
- The MFP DC power supply may generate noise due to the fusing heater lamp switching On/Off.
- Control the flicker and noise generation by changing the level of the fusing unit phase control.

**NOTE**

- **Reducing the control level can cause the DC power supply to generate noise, and increasing the level can cause the fluorescent lamp to flicker.**
- **Whenever changing the control level, specify a level that will reduce the fluorescent lamp flickering and DC power source noise.**

#### (2) Default setting

- Level 2
- Level 3 (only for EU)

#### (3) Setting range

- Level 1 to Level 4 (Step: 1)

#### (4) Procedure

1. Call the Service Mode to the screen.
2. Touch [Machine] -> [Heater Control Level].
3. Enter the new setting from the [+] / [-] key.
   - When the fluorescent light flickers: Turn down the level. (Example: Level 2 -> Level 1)
   - When there is a noise at power source system such as DC power supply: Turn up the level. (Example: Level 2 -> Level 3 -> Level 4)

### 5.4.5 Printer Area

#### (1) Leading Edge Adjustment

##### (a) Use

- To vary the print start position in the sub scan direction for each of different paper types. (to adjust the timing where paper is sent out from the registration roller)
- Although the adjustment is made on the manual bypass tray, the adjusted values are reflected to each paper tray.
- The PH unit has been replaced.
- The paper type has been changed.
- The print image deviates in the sub scan direction.
- A faint image occurs on the leading edge of the image.
- This setting can be made independently for plain paper, thin paper, thick 1/1+, thick 2, thick 3, thick 4, OHP film, and envelopes.

##### (b) Setting range

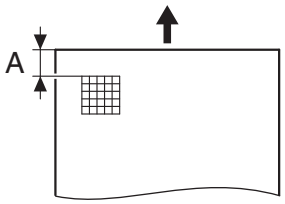


- Width A on the test pattern produced should fall within the following target.

| | |
|---|---|
| Target | 4.2 ± 1.0 mm |
| Setting range | -3.0 mm to +3.0 mm (in 0.2 mm increments) |

##### (c) Procedure

1. Load manual bypass tray with A3 or 11 x 17 plain paper.
2. Call the Service Mode to the screen.

3. Touch [Machine] -> [Printer Area] -> [Leading Edge Adjustment].
4. Select [Leading Edge Adjustment] or [Halftone pattern].
5. Select the [Plain Paper].
6. Press the Start key to let the machine produce a test pattern.
7. Check the dimension of width A on the test pattern.
8. If width A falls outside the target, change the setting using the [+] / [-] key.
   - If width A is longer than the target, make the setting value smaller than the current one.
   - If width A is shorter than the target, make the setting value greater than the current one.
9. Press the Start key to let the machine produce a test pattern.
10. Check the dimension of width A on the test pattern.
11. If width A is outside the target, change the setting again and make a check again.
12. If width A falls within the target, touch [END].
13. Following the same procedure, adjust for thin paper, thick 1 to 3, OHP film, and envelope.

### (2) Printer Image Centering Side 1

#### (a) Use

- To vary the print start position in the main scan direction for each paper source.
- The PH unit has been replaced.
- A paper feed unit has been added.
- The print image deviates in the main scan direction.

#### (b) Setting range

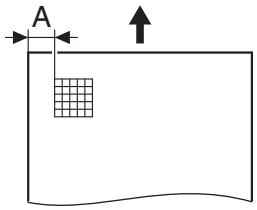


- Width A on the test pattern produced should fall within the following target.

| | |
|---|---|
| Target | 3.0 ± 1.0 mm |
| Setting range | -3.0 mm to +3.0 mm (in 0.2 mm increments) |

#### (c) Procedure

1. Call the Service Mode to the screen.
2. Touch [Machine] -> [Printer Area] -> [Printer Image Centering Side 1].
3. Select [Leading Edge Adjustment] or [Halftone pattern].
4. Select the paper source to be adjusted.
5. Press the Start key to let the machine produce a test pattern.
6. Check the dimension of width A on the test pattern.
7. If width A falls outside the target, change the setting using the [+] / [-] key.
   - If width A is longer than the target, make the setting value smaller than the current one.
   - If width A is shorter than the target, make the setting value greater than the current one.
8. Press the Start key to let the machine produce a test pattern.
9. Check the dimension of width A on the test pattern.
10. If width A is outside the target, change the setting again and make a check again.
11. If width A falls within the target, touch [END].
12. Following the same procedure, adjust for all other paper sources. (Use A4 or 8 1/2 x 11 plain paper for the bypass.)

### (3) Leading Edge Adj. Side 2 (Duplex)

#### (a) Use

- For individual types of paper, this function allows the adjustment of the image write start position in the sub scan direction on the 2nd side of duplex printing. (to adjust the timing where paper is sent out from the registration roller)
- Although the adjustment is made on the manual bypass tray, the adjusted values are reflected to each paper tray.
- This adjustment is made when the image on the 2nd side of paper deviates from the original position in the sub scan direction.
- This adjustment can be made independently for each of plain paper, thin paper, thick paper 1/1+, thick paper 2, and thick paper 3.

#### (b) Setting range

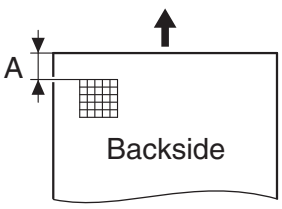


- Width A on the test pattern produced should fall within the following target.
- For measurement, use the image produced on the backside of the test pattern.

| | |
|---|---|
| Target | 4.2 ± 1.0 mm |

| | |
|---|---|
| Setting range | -3.0 mm to +3.0 mm (in 0.2 mm increments) |

#### (c) Procedure

1. Load manual bypass tray with A3 or 11 x 17 plain paper.
2. Call the Service Mode to the screen.
3. Touch [Machine] -> [Printer Area] -> [Leading Edge Adj. Side 2 (Duplex)].
4. Select [Leading Edge Adjustment] or [Halftone pattern].
5. Select the [Plain Paper].
6. Press the Start key to let the machine produce a test pattern.
7. Check the dimension of width A on the test pattern.
8. If width A falls outside the target, change the setting using the [+] / [-] key.
   - If width A is longer than the target, make the setting value smaller than the current one.
   - If width A is shorter than the target, make the setting value greater than the current one.
9. Press the Start key to let the machine produce a test pattern.
10. Check the dimension of width A on the test pattern.
11. If width A is outside the target, change the setting again and make a check again.
12. If width A falls within the target, touch [END].
13. Following the same procedure, adjust for thin paper and thick paper.

### (4) Prt. Image Center. Side 2 (Dup)

#### (a) Use

- To vary the print start position in the main scan direction for each paper source in the 2-Sided mode.
- The image on the backside of the 2-sided copy deviates in the main scan direction.

#### (b) Setting range

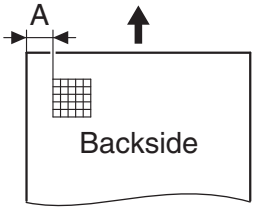


- Width A on the test pattern produced should fall within the following target.
- For measurement, use the image produced on the backside of the test pattern.

| | |
|---|---|
| Target | 3.0 ± 1.0 mm |
| Setting range | -3.0 mm to +3.0 mm (in 0.2 mm increments) |

#### (c) Procedure

1. Call the Service Mode to the screen.
2. Touch [Machine] -> [Printer Area] -> [Prt. Image Center. Side 2 (Dup)].
3. Select [Leading Edge Adjustment] or [Halftone pattern].
4. Select the paper source to be adjusted.
5. Press the Start key to let the machine produce a test pattern.
6. Check the dimension of width A on the test pattern.
7. If width A falls outside the target, change the setting using the [+] / [-] key.
   - If width A is longer than the target, make the setting value smaller than the current one.
   - If width A is shorter than the target, make the setting value greater than the current one.
8. Press the Start key to let the machine produce a test pattern.
9. Check the dimension of width A on the test pattern.
10. If width A is outside the target, change the setting again and make a check again.
11. If width A falls within the target, touch [END].
12. Following the same procedure, adjust for all other paper sources. (Use A4 or 8 1/2 x 11 plain paper for the manual bypass tray.)

### (5) Paper Feed Direction Adj.

#### (a) Use

- To synchronize the paper transport speed with the image writing speed.
- [Sub Scan Zoom Adj.] becomes necessary.
- The print image on the copy distorts (stretched, shrunk).
- When the print image on the copy is stretched in the sub scan direction.
- This setting can be made independently for normal/thin paper, thick 1/1+, thick 2, thick 3, and thick 4.

### (b) Setting range

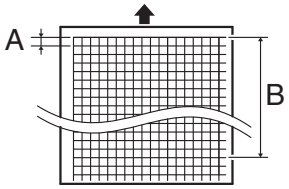


- Width A and width B on the test pattern produced should fall within the following target.
  **NOTE**
  - **Width A: equivalent to one grid**
  - **Width B: equivalent to 48 grids**

| | |
|---|---|
| Target | A: 8.13 ±0.2 mm |
| | B: 390.14 mm ±2.0 mm |
| Setting range | A: -7 to +7 |
| | B: -7 to +7 |

- Make adjustment in the same way after changing the paper to thick paper.

### (c) Procedure

1. Load manual bypass tray with A3 or 11 x 17 plain paper.
2. Call the Service Mode to the screen.
3. Touch [Machine] -> [Printer Area] -> [Paper Feed Direction Adj.].
4. Select [Lattice pattern] or [Halftone pattern].
5. Select [Normal/Thin Paper].
6. Press the Start key to let the machine produce a test pattern.
7. Check width A (equivalent to one grid) and width B (equivalent to 48 grids) on the test pattern.
8. Touch [Machine] -> [Printer Area] -> [Paper Feed Direction Adj.].
9. If width of A or B falls outside the target, change the setting using the [+] / [-] keys.
   - If width A or B is longer than the target, make the setting value smaller than the current one.
   - If width A or B is shorter than the target, make the setting value greater than the current one.
10. Press the Start key to let the machine produce a test pattern again.
11. Check width A and width B on the test pattern.
12. If width A or B falls outside the target, change the setting value and make a check again.
13. If width A falls within the target, touch [END].
14. Following the same procedure, adjust for thick paper.

## (6) Tray Printing Position: Tip

### (a) Use

- To change and adjust image printing position at vertical scanning direction by each feed. (to adjust the timing starting from the roller connection up to start of transfer output). It is not applicable in case the job is fed at re-feed.
- To be used when [Printer Area-Leading Edge Adjustment] is not enough for full adjustment (as such case that image printing position gets deviated due to pattern of each feed.)
- Setting is available according to feed of 1st. Short (the length of paper at vertical scanning direction is under 276.4 mm), 1st. Long (the length of paper at vertical scanning direction is over 276.4 mm), 2nd, 3rd, 4th and Manual.
- Adjustment is made for plain paper.

### (b) Setting range

**NOTE**
- **[Printer Area-Leading Edge Adjustment] should be made within target.**
- **Image printing position at vertical scanning direction is adjusted based on the combination value of this setting figure and [Printer Area-Leading Edge Adjustment] figure. In case the value is larger than +3.0mm or less than -3.0mm, the figure should be rounded to 3.0mm or -3.0mm.**

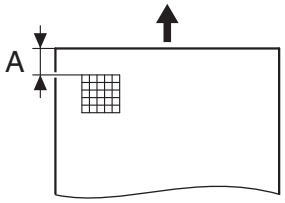


- Width A on the test pattern produced should fall within the following target.

| | |
|---|---|
| Target | 4.2 ± 1.0 mm |
| Setting range | -3.0 mm to +3.0 mm (in 0.2 mm increments) |

### (c) Procedure

1. Call the Service Mode to the screen.
2. Touch [Machine] -> [Printer Area] -> [Tray Printing Position: Tip].
3. Set plain paper to the targeted tray, and select the feed tray.

4. Press the Start key to let the machine produce a test pattern.
5. Check the dimension of width A on the test pattern.
6. If width A falls outside the target, change the setting using the [+] / [-] key.
   - If width A is longer than the target, make the setting value smaller than the current one.
   - If width A is shorter than the target, make the setting value greater than the current one.
7. Press the Start key to let the machine produce a test pattern.
8. Check the dimension of width A on the test pattern.
9. If width A is outside the target, change the setting again and make a check again.
10. If width A falls within the target, touch [END].

### 5.4.6 Scan Area

- Use the following color chart for the adjustment of the scanner section.
- If the color chart is not available, a scale may be used instead.

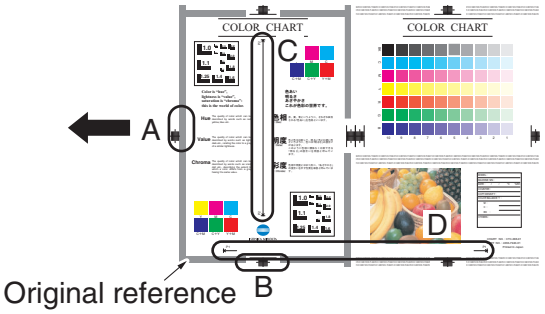


| Adjustment item | Reference |
|---|---|
| A: Image Position: Leading Edge | I.5.4.6.(1) Image Position: Leading Edge |
| B: Scanner Image Side Edge | I.5.4.6.(2) Scanner Image Side Edge |
| C: Main Scan Zoom Adj. | I.5.4.6.(3) Main Scan Zoom Adj. |
| D: Sub Scan Zoom Adj. | I.5.4.6.(4) Sub Scan Zoom Adj. |

#### (1) Image Position: Leading Edge

##### (a) Use

- To adjust variations in mounting accuracy and sensitivity of the scanner home sensor and in mounting accuracy of the original width scale by varying the scan start position in the main scan direction.
- When the original glass is replaced.
- When the original width scale is replaced.
- The scanner home sensor has been replaced.

##### (b) Setting range

Enlarged view of the color chart

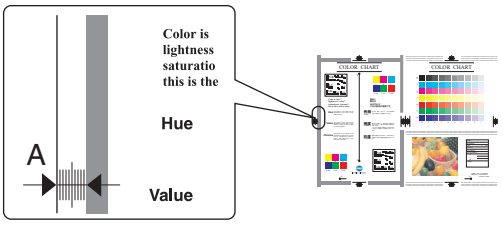


- A width on the color chart and one on the test pattern are measured and adjusted so that the difference of A width satisfies the target shown below.
- An adjustment must have been completed correctly of [Leading Edge Adjustment] of the [Printer Area].

| | |
|---|---|
| Target | A: ± 1.5 mm |
| Setting range | -3.0 mm to +3.0 mm (in 0.1 mm increments) |

##### (c) Procedure

1. Call the Service Mode to the screen.
2. Touch [Machine] -> [Scan Area] -> [Image Position: Leading Edge].
3. Position the color chart correctly so that the original reference point is aligned with the scale.
4. Press the Start key to make a copy.
5. Check point A on the test pattern.
6. If width A on the test pattern falls outside the target, change the setting using the [+] / [-] key.
   - If the copy image is less than the target, increase the setting value.
   - If the copy image exceeds the target, decrease the setting value.
7. Press the Start key to make another test pattern.
8. Check the image on the test pattern to see if the specifications are met.
9. Make adjustments until the targets are met.

### (2) Scanner Image Side Edge

#### (a) Use

- To adjust part-to-part variations in accuracy of scanner parts and their mounting accuracy by varying the scan start position in the main scan direction.
- The eMMC board has been replaced.
- When the original glass is replaced.
- The scanner home sensor has been replaced.

#### (b) Setting range

Enlarged view of the color chart

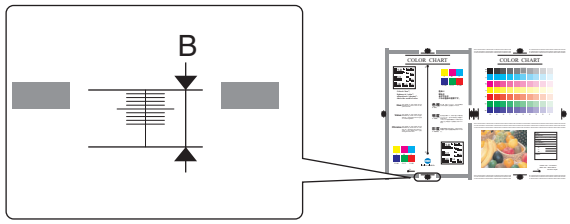


- B width on the color chart and one on the test pattern are measured and adjusted so that the difference of B width satisfies the target shown below.
- An adjustment must have been completed correctly of [Printer Image Centering Side 1] of [Printer Area].

| | |
|---|---|
| Target | Width B: ± 1.5 mm |
| Setting range | -5.7 mm to +5.7 mm (in 0.1 mm increments) |

#### (c) Procedure

1. Call the Service Mode to the screen.
2. Touch [Machine] -> [Scan Area] -> [Scanner Image Side Edge].
3. Position the color chart correctly so that the original reference point is aligned with the scale.
4. Press the Start key to make a copy.
5. Check point B on the image of the test pattern.
6. If the test pattern falls outside the target, change the setting using the [+] / [-] key.
   - If the copy image is less than the target, increase the setting value.
   - If the copy image exceeds the target, decrease the setting value.
7. Press the Start key to make a test pattern.
8. Check point B of the image on the test pattern to see if the specifications are met.
9. Make adjustments until the targets are met.

### (3) Main Scan Zoom Adj.

#### (a) Use

- To adjust the zoom ratio in the main scan direction for the scanner section.
- The eMMC board has been replaced.

#### (b) Setting range

Enlarged view of the color chart

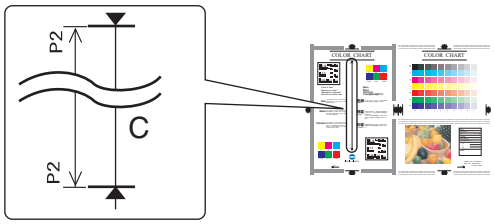


- Measure C width on the color chart and on the test pattern, and adjust the gap to be within the following target.
- An adjustment must have been completed correctly of [Paper Feed Direction Adj.] of [Printer Area].

| | |
|---|---|
| Target | Width C: ± 1.0 mm |
| Setting range | 0.990 to 1.015 (steps: 0.001) |

* Standard size when using a scale: 200.0 mm

#### (c) Procedure

1. Call the Service Mode to the screen.
2. Touch [Machine] -> [Scan Area] -> [Main Scan Zoom Adj.].
3. Position the color chart correctly so that the original reference point is aligned with the scale.
4. Press the Start key to make a test pattern.
5. Check the C width on the image of the copy.
6. If the test pattern falls outside the target, change the setting using the [+] / [-] key.
   - If the C width on the copy sample is less than one on color chart, increase the setting.
   - If the C width on the copy sample exceeds one on color chart, decrease the setting.
7. Press the Start key to make another test pattern.
8. Check the image on the test pattern to see if the specifications are met.

9. Make adjustments until the targets are met.

#### (4) Sub Scan Zoom Adj.

##### (a) Use

- To adjust the zoom ratio in the sub scan direction for the scanner section.
- The LED exposure unit or the scanner motor has been replaced.

##### (b) Setting range

Enlarged view of the color chart

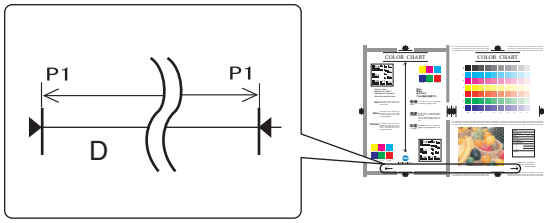


- Measure D width on the color chart and on the test pattern, and adjust the gap to be within the following target.
- An adjustment must have been completed correctly of [Paper Feed Direction Adj.] of [Printer Area].

| | |
|---|---|
| Target | Width D: ± 1.5 mm |
| Setting range | 0.990 to 1.015 (steps: 0.001) |

* Standard size when using a scale: 300.0 mm

##### (c) Procedure

1. Call the Service Mode to the screen.
2. Touch [Machine] -> [Scan Area] -> [Sub Scan Zoom Adj.].
3. Position the color chart correctly so that the original reference point is aligned with the scale.
4. Press the Start key to make a test pattern.
5. Check the D width on the image of the test pattern.
6. If the test pattern falls outside the target, change the setting using the [+] / [-] key.
   - If the D width on the copy sample is less than one on color chart, increase the setting.
   - If the D width on the copy sample exceeds one on color chart, decrease the setting.
7. Press the Start key to make another test pattern.
8. Check the image on the test pattern to see if the specifications are met.
9. Make adjustments until the targets are met.

### 5.4.7 Printer Reg. Loop Adj.

#### (1) Use

- To set the correction value of the paper loop length for each process speed of tray 1, tray 2-4 and LCT, manual or Duplex.
- To adjust the length of the loop formed in paper before the registration rollers.
- Use “Paper Passage” for paper passage check.
- When a paper skew occurs or paper misfeed occurs.

#### (2) Setting range

- The adjustable range is different depending on paper source and paper type.

| | Tray 1 | Tray 2-4, LCT (Built-in) | Manual | Duplex |
|---|---|---|---|---|
| Plain paper /Thin Paper | -11 to +7 | -11 to +7 | -11 to +7 | -12 to +8 |
| Thick 1/1+ | -11 to +7 | -11 to +7 | -11 to +7 | -12 to +8 |
| Thick 2/3/4 * | Not used | Not used | Not used | Not used |

- *: The settings made at [Thick 1/1+] are available to adjustment at [Thick 2/3/4].

#### (3) Procedure

1. Call the Service Mode to the screen.
2. Touch [Machine] -> [Printer Reg. Loop Adj.].
3. Select a paper source and a processing speed where the settings are made by touching the corresponding keys.
4. Enter the new setting from the 10-key pad.
   - To decrease the loop amount: Decrease the setting value.
   - To increase the loop amount: Increase the setting value.

### 5.4.8 Color Registration Adjustment

#### (1) Cyan, Magenta, Yellow

##### (a) Use

- To adjust color shift if there is any when comparing the original with copy of the plain or thick paper.
- To correct any color shift.
- This setting can be made independently for plain paper, thick 1/1+, thick 2, thick 3, and thick 4.

##### (b) Procedure

1. Call the Service Mode to the screen.

2. Touch [Machine] -> [Color Registration Adjustment].
3. Load manual bypass tray with A3/11 x 17 or A4/8 1/2 x 11 plain paper.
4. Press the Start key.
5. On the test pattern produced, check for deviation between the black line and the line of each color at positions X and Y.
6. Select the color to be adjusted.
7. Using the [+] / [-] key, change the setting value as necessary. (At this time, only the line of the selected color moves.)
   - If the cross deviates in the direction of A, increase the setting.
   - If the cross deviates in the direction of B, decrease the setting.
8. Produce another test pattern and make sure that there is no deviation.

<Check Procedure>

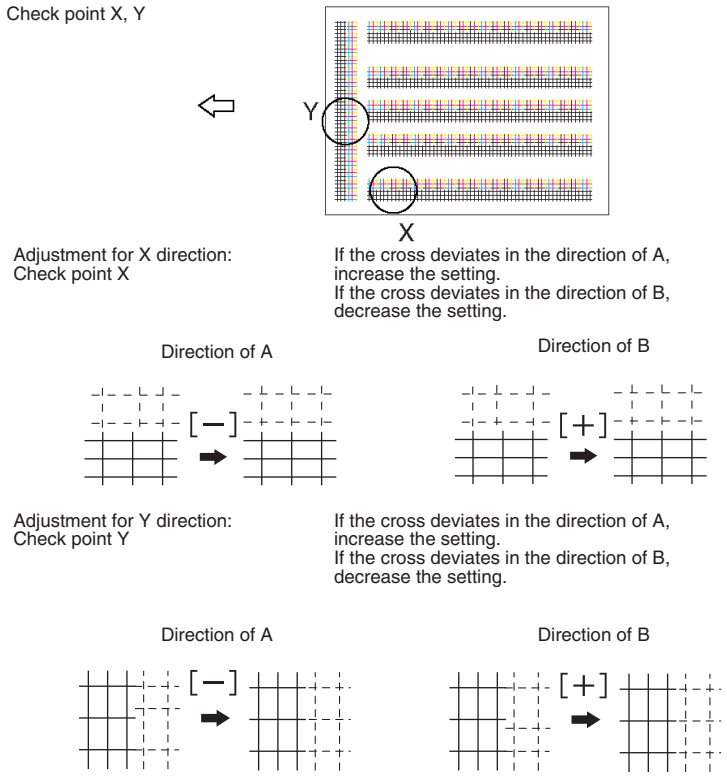


### 5.4.9 Print Head Skew Adj.

#### (1) Print Head Skew Adj.

##### (a) Use

- To display the default position of the skew correction motor.
- In this machine, it is not unable to enter the adjusting value.

##### (b) Procedure

1. Call the Service Mode to the screen.
2. Touch [Machine] -> [Print Head Skew Adj.] -> [Print Head Skew Adj.].
3. Check the skew adjustment value for each color.
4. Touch [END].

#### (2) Print Head Skew Reset

##### (a) Use

- Returns the skew correction motor to the default position and clear the backup copies of the cumulative skew amount.
- To be used when the backup position information of settings in the machine is lost due to operations such as replacement of the EEPROM.
- After addressing the alert code P-14 and completing an action to the problem, perform this function.
- Use this function when the current skew correction motor's position becomes unavailable due to the skew adjustment interrupted by the door being opened or the main power switch being turned OFF.

##### (b) Procedure

1. Call the Service Mode to the screen.
2. Touch [Machine] -> [Print Head Skew Adj.] -> [Print Head Skew Reset].
3. Touch the start key and execute the print head skew reset.

**NOTE**

- **After the print head skew reset is complete, be sure to perform [Initialize + Image Stabilization].**

#### (3) Skew adjustment result on the panel

- Skew adjustment result is provided in [Skew Adjust Value], which is selected as follows: [Service Mode] -> [State Confirmation] -> [Color Regist].

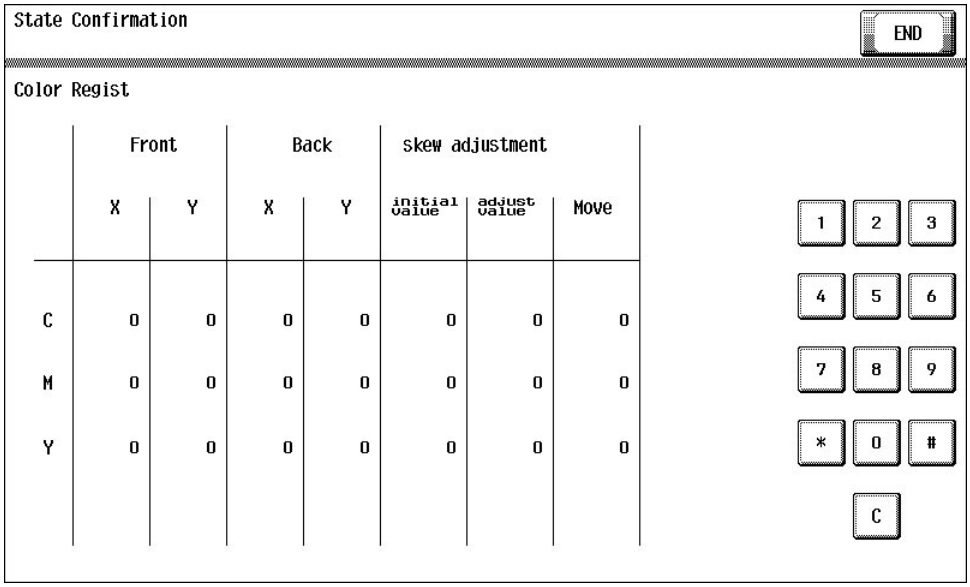


| Skew Adjust Value | Contents |
|---|---|
| Default | Displays the initial position of the skew correction. |
| adjust value | Displays the final skew correction position that was obtained after finishing the image stabilization control. |
| Move | Displays how much skew adjust value changed in the previous image stabilization control. |

### 5.4.10 LD adjustment

#### (1) LD Timing Adj.

- Not used

#### (2) LD 1/2 Balance Adj.

- Not used

#### (3) LD Light Width Adjustment

##### (a) Use

- To fine-adjust the light-emitting time of the laser that is scanned by the polygon motor.
- Use when the reproducibility of thin line is reduced.

**NOTE**

- **Adjustment value of this setting will be reflected by the image stabilization control.**

##### (b) Default setting

- +3

##### (c) Setting range

- 0 to +6 (Step: 1)

##### (d) Procedure

1. Call the Service Mode to the screen.
2. Touch [Machine] -> [LD adjustment] -> [LD Light Width Adjustment].
3. Enter the new setting from the [+] / [-] key.
   - Increase the value: Light-emitting time will be lengthened.
   - Decrease the value: Light-emitting time will be shortened.

### 5.4.11 Manual Bypass Tray Width Adj

#### (1) Use

- To set the maximum width and the minimum width for the bypass paper width detection resistor of the manual bypass guide.
- Use when the bypass paper width detection resistor of the manual bypass guide has been changed.
- Use when a false paper size is displayed when the manual bypass is used.

#### (2) Procedure

1. Call the Service Mode to the screen.
2. Touch [Machine] -> [Manual Bypass Tray Width Adj].
3. Touch [Max. Width].
4. Load the bypass tray with paper having a width of 297 mm.
5. Press the Start key and check that the results are [OK].
6. Touch [Min. Width.].
7. Load the bypass tray with paper having a width of 110 mm.
8. Press the Start key and check that the results are [OK].

* Make the adjustment again if the results are [NG].

### 5.4.12 Lead Edge Erase Adjustment

#### (1) Use

- To set the leading edge erase amount of the paper.
- Upon user requests, it is possible to specify the void area where image is not printed along the leading edge.
- This adjustment can be made individually for First Side, Second Side, Thin Paper Front, and Thin Paper Back.

#### (2) Default setting

##### (a) First Side/Second Side

- 4 mm

##### (b) Thin Paper Front/Thin Paper Back

- 5 mm

#### (3) Setting item

##### (a) First Side/Second Side

- 4 mm
- 5 mm
- 7 mm

**NOTE**

- **When "4 mm" is selected, 4.2 mm is the actual amount to be erased in print based on the control system of the machine.**

##### (b) Thin Paper Front/Thin Paper Back

- 4.0 mm to 10.0 mm (Step: 1.0 mm)

### 5.4.13 Non-Image Area Erase Check

#### (1) Use

- The non-image area erase function may not work properly under bright light source. Incoming light quantity is checked to verify that the non-image area erase function can work properly under the environment.
- Verification results are shown as follows:

| | |
|---|---|
| OK | Works properly. |
| NG1 | Works properly. However, data that may interfere with the non-image area erase function was found. This function may not work well with dark original. |
| NG2 | Data that may interfere with the non-image area erase function was found. |

- Use this feature when installing a new machine or reinstalling a machine in a new place.
- Use this feature when the non-image area erase function fails to work properly due to the changes of the surrounding environment at the installation site.

#### (2) Procedure

1. Call the Service Mode to the screen.
2. Touch [Machine] -> [Non-Image Area Erase Check].
3. Press the Start key to start a check.

   **NOTE**

   - **Before the check, make sure that the DF or original cover is completely opened. In addition, make sure that no scratch or stain exists on the original glass.**

4. Check the result is "OK."

* If the check result is "NG1" or "NG2," reinstall the machine in another place or adjust the orientation of the machine to reduce light incidence on the machine. Then, perform the check again.

### 5.4.14 ADF Scan Glass Contamination

#### (1) Use

- To check the stain on the ADF scan glass and display the result.
- To manually perform the pre-detection of the stain which is normally conducted when the main power switch is turned ON, recovering from the sleep/low power mode, etc.
- [ADF Scan Glass Contamination] will be conducted with the detection level set by [Service Mode] -> [System 2] -> [ADF Scan Glass Contamin. Set.] -> [ADF Scan Glass Contamin. Sensitivity]. When the above setting is set to "Not Set", "NG1" or "NG2" will be displayed even though the pre-detection is conducted.

#### (2) Procedure

1. Call the Service Mode to the screen.
2. Touch [Machine] -> [ADF Scan Glass Contamination].
3. Press the start key to start the pre-detection.
4. Check to make sure that "OK" is displayed for the result.

* When the result says "NG1" or "NG2", clean the glass and check again.

### 5.4.15 Exhaust Fan Stop Delay

- Not used

### 5.4.16 PPM Control Choice

#### (1) Use

- To improve productivity when printing on thin paper.
- To give a higher priority to productivity than to fusing performance, change the setting to “100 %.”

#### (2) Default setting

- 70 %

#### (3) Functions

- 100 %
- 70 %

## 5.5 Firmware Version

### 5.5.1 Use

- To check the firmware version.
- Use when the firmware is upgraded.
- When the firmware is upgraded or PWB is replaced.

### 5.5.2 Procedure

1. Call the Service Mode to the screen.
2. Touch [Firmware Version].
3. Touch the [↑] / [↓] key to check the firmware version.

## 5.6 Imaging Process Adjustment

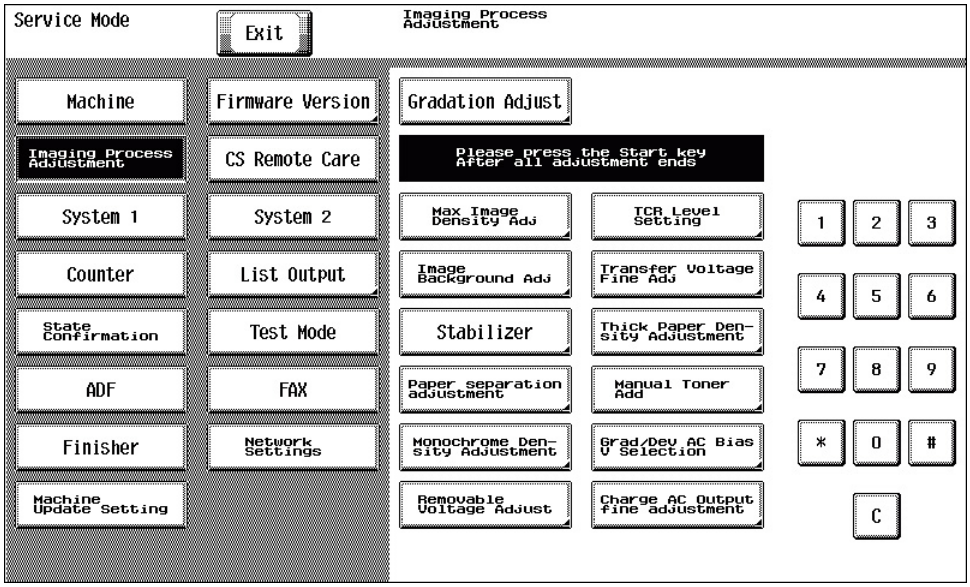


### 5.6.1 Gradation Adjust

#### (1) Use

- To make an automatic adjustment of gradation based on the test pattern produced and the readings taken by the scanner.
- Color reproduction performance becomes poor.
- The drum unit, developing unit, or transfer belt unit has been replaced.

* The Adj. Values of “Dark” and “Highlight” shown on the gradation adjust screen represent how much corrections are made to produce an ideal image output. Conv. Value shows the difference from the ideal image density.
* The closer the Conv. Value to 0, the more ideal the image.

| Mode key | Description |
|---|---|
| Image Stabilization | • The image stabilization is performed. The controller reflects the image stabilization result in the gradation adjustment table to update the table.<br>• After the image stabilization is performed, [Printer] / [Copy] key will become selectable. |
| Printer (600dpi) | Detect the gradation reproducibility of the gradation reproduction method (gradation screen, resolution screen) for 600dpi print mode, and correct the gradation adjustment table. |
| Printer (1200dpi) | Detect the gradation reproducibility of the gradation reproduction method (gradation screen, resolution screen) for 1200dpi print mode, and correct the gradation adjustment table. |
| Copy | Detect the gradation reproducibility of the following gradation reproduction methods, and correct the gradation adjustment table. |

| Mode key | Description |
|---|---|
| | • Compression screen (reduce the data volume by 1bit from 8bit of each color while maintaining above a certain quality of characters/images)<br>• FFET (reproduce the character edges smoothly without using the screen) |

Example of the gradation adjustment screen (Printer-600dpi).

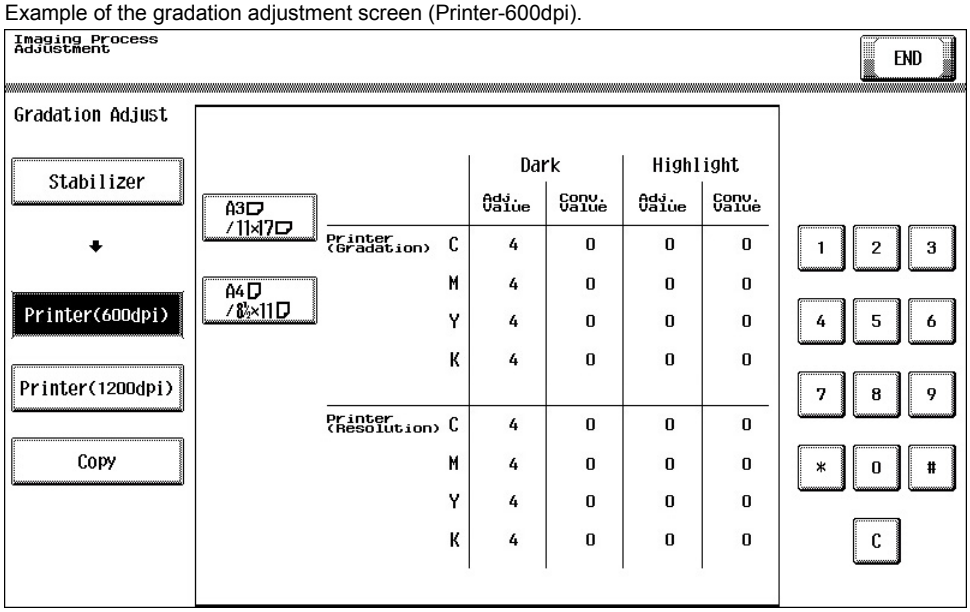


Example of the gradation adjustment screen (Printer-1200dpi).

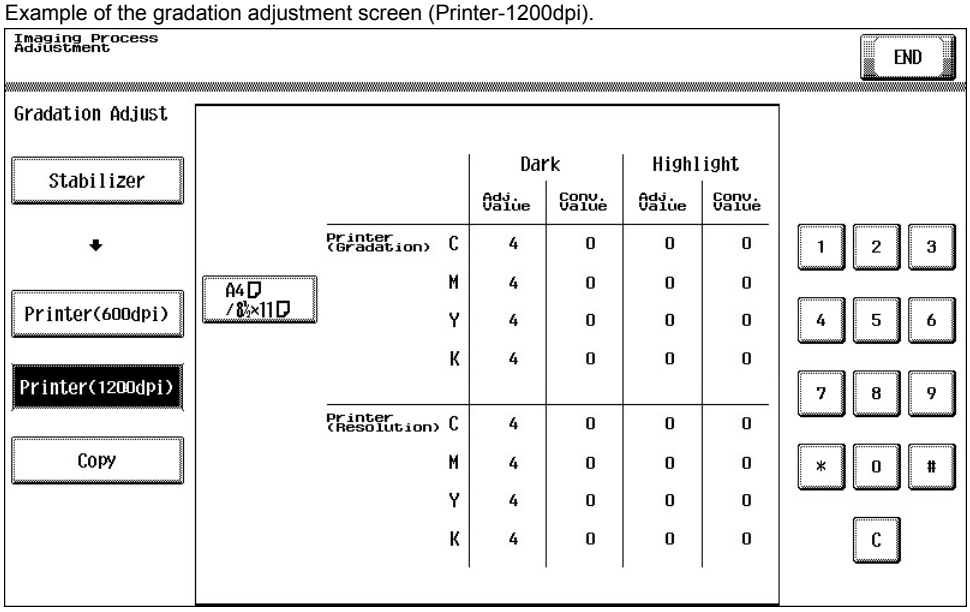


Example of the gradation adjustment screen (Copy).

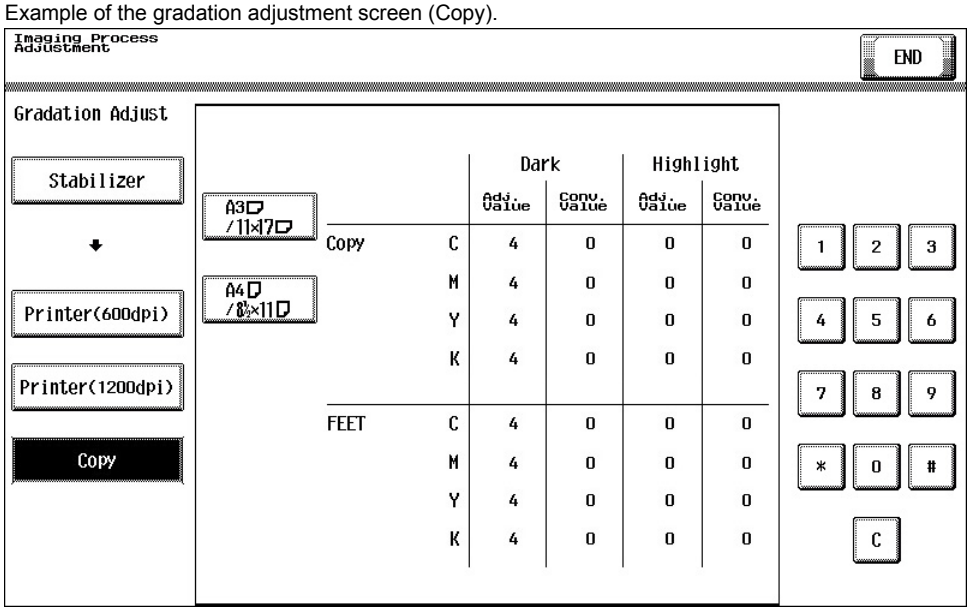

### (2) Procedure

**NOTE**

- **When executing the gradation adjustment, make sure to use the white paper for color copy.**

1. Call the Service Mode to the screen.
2. Touch these keys in this order: [Image Process Adjustment] -> [Gradation Adjust].
3. Touch [Stabilizer] and the Start key to perform image stabilization.
   **NOTE**
   - **Before executing Gradation adjust, be sure to perform Stabilizer.**
4. Select Print or Copy and select the paper size on which test pattern is printed.
   **NOTE**
   - **When [Printer (1200 dpi) is specified, [A3S/11x17S] not displayed.**
5. Press the Start key to let the machine produce a test pattern.
   **NOTE**
   - **When the image stabilization performed in step 3 is NG, the Start key stops functioning.**
   - **When one of the alert codes, P-5, P-6, P-7, P-8, P-9, and P-28 is on the screen and [Printer] is selected, the Start key stops functioning.**
   - **When "Printer (1200 dpi)" is specified, two sheets of A4 or 8-1/2x11 paper will be output.**
6. Place the test pattern produced on the original glass.
   **NOTE**
   - **Depending on the size of the test pattern, it is set in a different position. Set the test pattern according to the instructions displayed on the control panel.**
7. Place ten blank sheets of paper on the test pattern and lower the original cover.
8. Press the Start key. (The machine will then start scanning the test pattern.)
9. Touch [OK] and repeat steps from 4 through 8 twice. (a total of three times)
10. Touch [Gradation Adjust] to display the Adj. Values and Conv. Values of each color (C, M, Y and K) for Dark and Highlight.
11. Use the following procedures to check the Conv. Value.

**NOTE**

- **Dark: 0 ± 100 and Highlight: 0 ± 60: It completes the adjustment procedure.**
- **If neither Dark nor Highlight falls outside the ranges specified above: Perform steps from 4 to 8.**
- **If the convergence falls within the specified range after the second Gradation Adjustment, further adjustment may not be necessary.**
- If a fault is detected, “0” is displayed for all values. In that case, after turning off the main power switch, turn it on again more than 10 seconds after and then make the gradation adjustment again.
- If either dark or highlight still remains outside the specified ranges perform Max Image Density Adj.
- If a total of four sequences of gradation adjust do not bring the values into the specified range, check the image.
- If the image is faulty, perform the troubleshooting procedures for image problems.

## 5.6.2 Max Image Density Adj

### (1) Use

- To adjust gradation, color, and image density to target reproduction levels by varying the maximum amount of toner sticking to paper through auxiliary manual fine-adjustment of gamma of each color after gradation adjust.
- An image quality problem is not corrected even after gradation adjust has been run.

### (2) Default setting

- 0

### (3) Setting range

- -10 to +10 (step: 1 *)
  *: 1 step corresponds to 0.03 in density difference.

### (4) Procedure

1. Call the Service Mode to the screen.
2. Touch [Imaging Process Adjustment] -> [Max Image Density Adj].
3. Select [Copy] or [Printer].
4. Select the color to be adjusted.
5. Enter the new setting from the 10-key pad and [+/-].
   The maximum amount of toner sticking
   - To increase the maximum amount of toner sticking, increase the setting value.
   - To decrease the maximum amount of toner sticking, decrease the setting value.
6. Touch [END] to return to the [Imaging Process Adjustment] menu screen.
7. Touch [Stabilizer].
8. Touch [Stabilization Only].
9. Press the Start key to validate the adjustment value.
10. Check the print image for any image problem.

**NOTE**

- **If the setting value has been changed, be sure to run an image stabilization sequence to make valid the new value.**

### 5.6.3 TCR Level Setting

#### (1) Use

- To adjust the T/C control level when an abnormal image density occurs as a result of a change in the amount of charge of toner and carrier due to an environmental change.
- Use when T/C changes due to changes in environmental conditions of the user site.

#### (2) Default setting

- 0

#### (3) Setting range

- -3 to +3 (1 step in positive (+) direction: 0.5 % increase, 1 step in negative (-) direction: 0.5 % decrease, Center value 0 corresponds to 6.5 % T/C ratio.)

#### (4) Procedure

1. Call the Service Mode to the screen.
2. Touch [Imaging Process Adjustment] -> [TCR Level Setting].
3. Select the color to be adjusted.
4. Enter the new setting from the 10-Key pad and [+/-] key.
   - To increase T/C, increase the setting value.
   - To decrease T/C, decrease the setting value.
5. Touch [END] to validate the adjustment value.
6. Check the print image for any image problem.

### 5.6.4 Image Background Adj

#### (1) Use

- To adjust the highlight portion (fog level) to the target reproduction level by making an auxiliary manual fine-adjustment of γ of each color after gradation adjust.
- Use when a foggy background occurs due to a printer problem.

#### (2) Default setting

- 0

#### (3) Setting range

- -5 to +5 (step: 1*)
  *: 1 step corresponds to 10 V.

#### (4) Procedure

1. Call the Service Mode to the screen.
2. Touch [Imaging Process Adjustment] -> [Image Background Adj].
3. Select the color to be adjusted.
4. Enter the new setting from the 10-key pad and [+/-] key.
   foggy background
   - To make the background level foggier, decrease the setting value.
   - To make the background level less foggy, increase the setting value.
5. Touch [END] to return to the [Imaging Process Adjustment] menu screen.
6. Touch [Stabilizer].
7. Touch [Stabilization Only].
8. Press the Start key to validate the adjustment value.
9. Check the print image for any image problem.

**NOTE**

- **If the setting value has been changed, be sure to run an image stabilization sequence to make valid the new value.**

### 5.6.5 Transfer Voltage Fine Adj

#### (1) Primary transfer adj.

##### (a) Use

- Adjust the output value for the 1st image transfer voltage.
- To use when white spots appeared.

##### (b) Default setting

- 0

##### (c) Setting range

- -8 to +7 (step: 1 *)
  - *1: step is equivalent to 1μA.

##### (d) Procedure

1. Call the Service Mode to the screen.
2. Select [Test Mode] -> [Halftone Pattern] to output the red or green test pattern.
3. When the test pattern image has white spots, adjust with the following procedure.

4. Touch [Imaging Process Adjustment] -> [Transfer Voltage Fine Adj].
5. Select [Primary transfer adj.].
6. Select the color.
7. Enter the new setting from the [+] / [-] key.
   - Increase the output value for the 1st image transfer voltage: Increase the setting value (white spots will decrease)
   - Decrease the output value for the 1st image transfer voltage: Decrease the setting value.
8. Touch [END] to validate the setting value.
   Gradually increase the setting value to the acceptable white spots level while checking the test pattern.

**NOTE**
- **Photo conductor memory may occur by taking measure to white spots occurred by increasing the 1st image transfer voltage to adjust it.**
- **Check the image on the test pattern or the color chart when adjusting.**

#### (2) 2nd Transfer Adj.

##### (a) Use
- Adjust the 2nd image transfer output (ATVC) on the 1st page and the 2nd page for each paper type.
- To use when the transfer failure occurs.
- Pressing the [AUTO] key down activates the 2nd image transfer amperage upper and lower limit control. In this case, the machine uses the voltage determined by the auto transfer voltage control and the 2nd image transfer voltage fine adj value does not take effect.

##### (b) Default setting
- Auto

##### (c) Setting item

| | |
|---|---|
| 600dpi - Front | Plain - Color, Normal Paper - Black, Thin Paper - Color, Thin Paper - Black, Thick1 - Color, Thick Paper1 - Black, Thick1+ - Color, Thick Paper1+ - Black, Thick2, Thick3, Thick4, Post., Envelope, OHP Film, Banner Thick1+, Banner Thick2, Banner Thick3 |
| 600dpi - Back | Plain - Color, Normal Paper - Black, Thin Paper - Color, Thin Paper - Black, Thick1, Thick1+, Thick2, Thick3, Thick4, Post. |
| 1200dpi - Front | Plain - Color, Normal Paper - Black, Thin Paper - Color, Thin Paper - Black, OHP Film |
| 1200dpi - Back | Plain - Color, Normal Paper - Black, Thin Paper - Color, Thin Paper - Black |

##### (d) Setting range
- -8 to +7 (step: 1 *)
  - *: 1 step is equivalent to 100 V.

##### (e) Procedure
1. Call the Service Mode to the screen.
2. Touch [Imaging Process Adjustment] -> [Transfer Voltage Fine Adj].
3. Select [2nd Transfer Adj].
4. Select the image side (First Side or Second Side) and resolution (600 dpi or 1200 dpi) when a transfer failure occurs.
5. Select the paper type with the transfer failure.
6. Enter the new setting from the [+] / [-] keys.
   - To increase the ATVC value (in the direction of a foggier image), increase the setting value.
   - To decrease the ATVC value (in the direction of a less foggy image), decrease the setting value.
7. Touch [END] to validate the setting value.
8. Check the print image for any image problem.

**NOTE**
- **To automatically control the 2nd image transfer output without using the 2nd image transfer voltage fine adj value, press [Auto].**

### 5.6.6 Image Stabilization

#### (1) Image Stabilization Only

##### (a) Use
- The image stabilization sequence is carried out without clearing the historical data of image stabilization control.
- Use if an image problem persists even after gradation adjustment has been executed.
- When [Max Image Density Adj] and [Image Background Adj] of Service Mode are changed.

##### (b) Procedure
1. Call the Service Mode to the screen.
2. Touch [Imaging Process Adjustment] -> [Stabilization Only].
3. Touch [Stabilization Only].
4. Press the Start key to start Stabilizer.
   The Start key turns orange and stays lit up orange during the Stabilizer sequence.
5. Stabilizer is completed when the Start key turns blue.

#### (2) Initialize+Image Stabilization

##### (a) Use
- To carry out an image stabilization sequence after the historical data of image stabilization control has been initialized.
- Use if an image problem persists even after [Gradation Adjustment] has been executed.

- Use if tone reproduction and maximum density are faulty even after image stabilization has been executed.
- When color shift correction is needed again after the machine maintenance.
- After executing the print head skew reset.

#### (b) Procedure

1. Call the Service Mode to the screen.
2. Touch [Imaging Process Adjustment] -> [Stabilizer].
3. Touch [Initialize+Image Stabilization].
4. Press the Start key to start Stabilizer.
   The Start key turns orange and stays lit up orange during the Stabilizer sequence.
5. Stabilizer is completed when the Start key turns blue.

### 5.6.7 Thick Paper Density Adjustment

#### (1) Use

- To fine-adjust density of printed images of each color for thick paper.
- To change the density of the printed image for each color with thick paper.

#### (2) Default setting

- 0

#### (3) Setting range

- -5 to +5 (step: 1)

#### (4) Procedure

1. Call the Service Mode to the screen.
2. Touch these keys in this order: [Imaging Process Adjustment] -> [Thick Paper Density Adjustment].
3. Touch the Lighter or Darker key for the desired color to correct the image density.
   - Light color: Touch the Darker key.
   - Dark color: Touch the Lighter key.
4. Touch [END] to validate the setting value.

### 5.6.8 Paper Separation Adjustment

#### (1) Use

- By changing the period between the activation of the registration roller and the 2nd image transfer output, the paper separation position can be adjusted for the 1st and 2nd sides of paper.
- To ensure proper balance between paper separating and image transferring performances by varying the paper separation position applied for duplex printing of thin paper (52 to 59 g/m$^2$) in hot and humid conditions.

#### (2) Default setting

- 0

#### (3) Setting range

- -10 mm to +10 mm (step: 0.1 mm)

#### (4) Procedure

1. Call the Service Mode to the screen.
2. Touch [Imaging Process Adjustment] -> [Paper separation adjustment].
3. Select [First Side], [Second Side], [Thin Paper Front] or [Thin Paper Back].
4. Enter the new setting from the [+] / [-] key.
   - Priority on paper separation performance: Increase the setting value
   - Priority on image transfer performance: Decrease the setting value
5. Touch [END] to validate the setting value.
6. Check the print image for any image problem.

### 5.6.9 Manual Toner Add

#### (1) Manual Toner Add

##### (a) Use

- To adjust the set T/C level by replenishing an auxiliary supply of toner when a low ID occurs due to a lowered T/C after large numbers of prints have been made of originals having a high image density.
- When there is a drop in T/C ratio.

##### (b) Procedure

1. Call the Service Mode to the screen.
2. Touch [Imaging Process Adjustment] -> [Manual Toner Add].
3. Select the color, for which supply of toner is to be replenished.
4. Pressing the Start key will let the machine detect the current toner density and; if the density is lower than a reference value, a toner replenishing sequence and then a developer agitation sequence are run. Then a developer agitation sequence are run.
5. Operation above is repeated maximum of ten sets of times with one set consisting of three sequences until it reaches to the reference value. When it is higher than the reference value, only the agitation is conducted.

#### (2) Hopper Toner Filling

##### (a) Use

- To fill the sub hopper with toner and perform agitate in the developing unit.
- Used when toner is manually supplied to the toner hopper and agitate in the developing unit is performed.

##### (b) Procedure

1. Call the Service Mode to the screen.
2. Touch [Imaging Process Adjustment] -> [Manual Toner Add] -> [Hopper Toner Filling].
3. Press the Start key to start filling and agitating operations.

### 5.6.10 Monochrome Density Adjustment

#### (1) Use

- To fine-adjust the density of the printed image for a black print.
- To vary the density of the printed image of a black print.

#### (2) Default setting

- 0

#### (3) Setting range

- -2 to +2 (step: 1)

#### (4) Procedure

1. Call the Service Mode to the screen.
2. Touch these keys in this order: [Imaging Process Adjustment] -> [Monochrome Density Adjustment].
3. Touch [Lighter] or [Darker] as necessary to correct the image density.
   - If the black is light, touch the Darker key.
   - If the black is dark, touch the Lighter key.
4. Touch [END] to validate the setting value.

### 5.6.11 Grad/Dev AC Bias V Selection

#### (1) Use

- Changes the developing AC voltage, charging AC voltage and 1st. image transfer current settings.
- Turn ON to lower the above-mentioned voltages and prevent white spots caused by leakage.
- Used when white spots occur on the entire image surface in low atmospheric pressure environments, such as in high altitudes, or when void areas occur on a yellow halftone pattern image or a solid pattern image.

#### (2) Default setting

- OFF

#### (3) Setting item

- ON
- OFF

### 5.6.12 Removable Voltage Adjust

#### (1) Use

- To allow the basic charge neutralizing voltage to be adjusted.
- To prevent separation failure (jam, paper conveyance failure) that may occur when paper other than recommended one is used by adjusting the neutralization voltage to the one that suits the type of paper the user uses.

#### (2) Default setting

- Auto

#### (3) Setting range

- -3 to +3 (Step: 1*)
  *: 1 step is equivalent to 1,000 V.

#### (4) Procedure

1. Call the Service Mode to the screen.
2. Touch [Imaging Process Adjustment] -> [Removable Voltage Adjust].
3. Select [First Side], [Second Side], [Thin Paper Front] or [Thin Paper Back].
4. Enter the new setting from the [+] / [-] keys.
   - To increase the neutralization voltage, increase the setting value.
   - To decrease the neutralization voltage, decrease the setting value.
5. Touch [END] to validate the setting value.
6. Check the print image for any image problem.

* Select [Auto] at each paper type to automatically control the neutralization voltage without using the neutralization voltage setting value.

### 5.6.13 Charge AC Output fine adjustment

#### (1) Use

- Adjusts the charging AC voltage applied to the charge roller.
- Adjusts the voltage when there are image problems (fogging, white spots, etc).
- Increases the setting when there are image problems (fogging, white spots, etc).

#### (2) Default setting

- 0

#### (3) Setting range

- -12 to 8 (step: 1*)
  *: 1 step is equivalent to 25 Vpp.

## 5.7 CS Remote Care (Outlines)

<Service Mode screen>

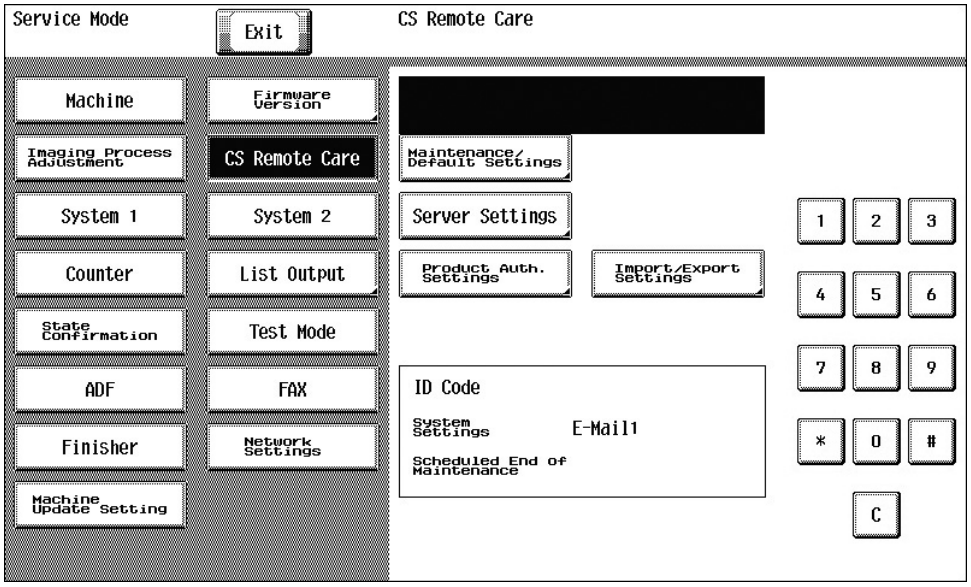


- CS Remote Care enables the machine and the computer at CS Remote Care center to exchange data through telephone/fax line, network or E-mail in order to control the machine.
- CS Remote Care enables the machine to call the computer at the center when trouble occurs. It also enables the computer at the center to contact the machine for the necessary data.
- Data which CS Remote Care handles can be divided into the following groups.
  - Data which show the status of use of the machine such as total count, PM count.
  - Data which show the abnormal situation on the machine such as where and how often errors occur.
  - Data on adjustment
  - Data on setting

<PageScope Web Connection display>

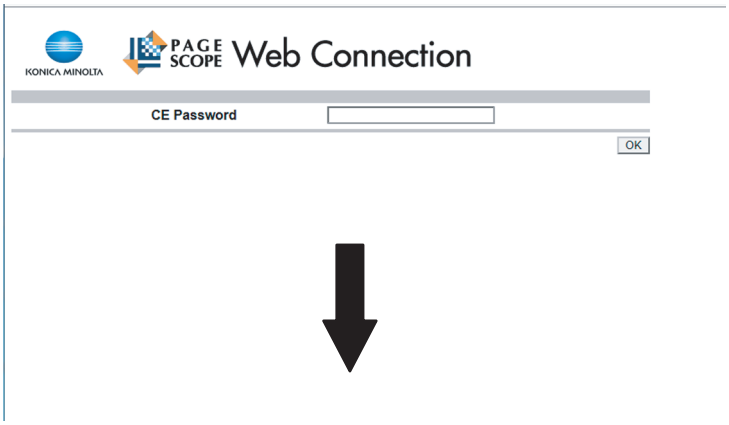


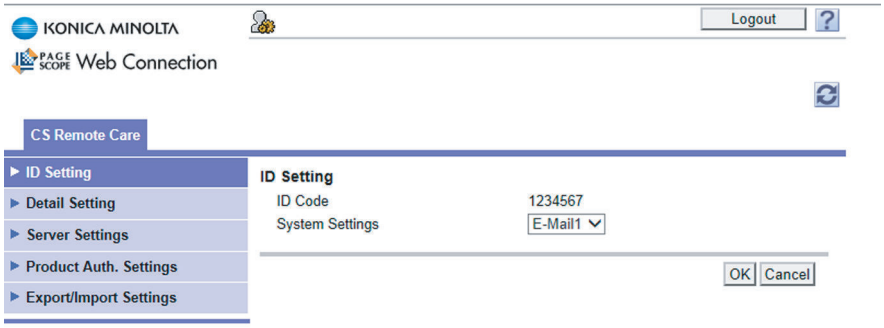


- CS Remote Care can be set also from PageScope Web Connection. Enter the following address, then enter the CE password and touch [OK].
  - http://(IP address)/csrc_index.html
- For the setting procedure, see I.5.8 Setting up the CS Remote Care.

## 5.8 Setting up the CS Remote Care

**NOTE**

- **For resetting up the machine which CS Remote Care has already been set up, clear the RAM for CS Remote Care before resetting.**
- **When using a telephone line modem for connection, use the data modem which is based on the ITU-T recommendations V.34/V.32 bis/V.32 and AT command.**

### 5.8.1 Using the telephone line modem

1. Register the device ID
   - Register the device ID to the application at CS Remote Care center.
     **NOTE**
     - **The initial connection is not available unless the device ID is registered.**
2. Connecting the modem
   - Turn the power for the modem OFF. Connect the machine and the modem with a modem cable. Connect the modem and the wall jack with a modular cable.
     **NOTE**
     - **For connecting the modular cable, see the manual for the modem.**
3. Inputting the ID code
   1. Select [Service Mode] -> [CS Remote Care] -> [Maintenance/Default Settings], and touch [ID Code].
   2. Input the seven digits ID of the service person, and touch [ID Code] again.
4. Clearing the RAM
   1. Select [Service Mode] -> [CS Remote Care] -> [Maintenance/Default Settings], and touch [Detail Setting].
   2. Touch [RAM Clear].
   3. Select [Set], and touch [OK].
5. Selecting the CS Remote Care function
   - Select [Service Mode] -> [CS Remote Care] -> [Maintenance/Default Settings] -> [System Selection], and touch [Modem].
6. Inputting the ID code
   1. Select [Service Mode] -> [CS Remote Care] -> [Maintenance/Default Settings], and touch [ID Code].
   2. Input the seven digits ID of the service person, and touch [ID Code] again.
7. Setting the date and time for CS Remote Care
   1. Select [Service Mode] -> [CS Remote Care] -> [Maintenance/Default Settings], and touch [Detail Setting].
   2. Touch [Date & Time Setting].
   3. Input the date, time and the time zone using the 10-key pad, and touch [Set].
8. Setting the Center ID
   1. Select [Service Mode] -> [CS Remote Care] -> [Maintenance/Default Settings], and touch [Detail Setting].
   2. Touch [Machine Setting] -> [Center ID], and input the Center ID (five digits).

9. Confirm the Device ID
   1. Select [Service Mode] -> [CS Remote Care] -> [Maintenance/Default Settings], and touch [Detail Setting].
   2. Touch [Machine Setting] -> [Device ID], and input Device ID (13 digits).
      **NOTE**
      - **[Device ID] displays the serial number that is entered in [Service Mode] -> [System 1] -> [Serial Number].**
10. Setting the telephone number of the Center
   1. Select [Service Mode] -> [CS Remote Care] -> [Maintenance/Default Settings], and touch [Detail Setting].
   2. Touch [Machine Setting] -> [Center Telephone Number].
   3. Input the telephone number of the center using the 10-key pad and [P], [T], [W], [-].
11. Inputting the device telephone number
   1. Select [Service Mode] -> [CS Remote Care] -> [Maintenance/Default Settings], and touch [Detail Setting].
   2. Touch [Basic Setting] -> [Device Telephone Number].
   3. Input the Device telephone number using the10-key pad and [P], [T], [W], [-].
12. Inputting the AT command for initializing the modem
   1. Select [Service Mode] -> [CS Remote Care] -> [Maintenance/Default Settings], and touch [Detail Setting].
   2. Touch [AT Command].
   3. Input AT Command.
      **NOTE**
      - **Change this command only when it is necessary. (They do not need to be changed in normal condition.)**
      - **For details on AT command, see the manual for the modem.**
13. Setting the DIPSW for CS Remote Care
   **NOTE**
   - **This setting is not normally necessary. Take this step only when necessary in a specific connecting condition.**

14. Executing the initial transmission
   1. Select [Service Mode] -> [CS Remote Care] -> [Maintenance/Default Settings], and touch [Detail Setting].
   2. Touch [Machine Setting] -> [Initial Transmission].
   3. Touch [initial transmission] key on the right bottom of the screen to start initial transmission.
   4. When the machine is properly connected with the center, CS Remote Care setting screen will be displayed.
      **NOTE**
      - **The initial transmission key at the right bottom of the screen will be displayed only when the center ID, the device ID, Telephone number of the center and the device telephone number have been input.**
        **However, if an invalid value is input as the device ID, the initial transmission key is not displayed.**

### 5.8.2 Using the Fax line modem

**NOTE**
- **Setting will be available only when the optional fax board is installed.**

1. Register the device ID
   - Register the device ID to the application at CS Remote Care center.
     **NOTE**
     - **The initial connection is not available unless the device ID is registered.**
2. Remove the telephone line modem
   - Be sure to remove the telephone line modem when the fax line is used.
3. Inputting the ID code
   1. Select [Service Mode] -> [CS Remote Care] -> [Maintenance/Default Settings], and touch [ID Code].
   2. Input the seven digits ID of the service person, and touch [ID Code] again.
4. Clearing the RAM
   1. Select [Service Mode] -> [CS Remote Care] -> [Maintenance/Default Settings], and touch [Detail Setting].
   2. Touch [RAM Clear].
   3. Select [Set], and touch [OK].
5. Selecting the CS Remote Care function
   - Select [Service Mode] -> [CS Remote Care] -> [Maintenance/Default Settings] -> [System Selection], and touch [Fax].
6. Inputting the ID code
   1. Select [Service Mode] -> [CS Remote Care] -> [Maintenance/Default Settings], and touch [ID Code].
   2. Input the seven digits ID of the service person, and touch [ID Code] again.
7. Setting the date and time for CS Remote Care
   1. Select [Service Mode] -> [CS Remote Care] -> [Maintenance/Default Settings], and touch [Detail Setting].
   2. Touch [Date & Time Setting].
   3. Input the date, time and the time zone using the 10-key pad, and touch [Set].
8. Setting the Center ID
   1. Select [Service Mode] -> [CS Remote Care] -> [Maintenance/Default Settings], and touch [Detail Setting].
   2. Touch [Machine Setting] -> [Center ID], and input the Center ID (five digits).
9. Confirm the Device ID
   1. Select [Service Mode] -> [CS Remote Care] -> [Maintenance/Default Settings], and touch [Detail Setting].
   2. Touch [Machine Setting] -> [Device ID], and input Device ID (13 digits).
      **NOTE**
      - **[Device ID] displays the serial number that is entered in [Service Mode] -> [System 1] -> [Serial Number].**
10. Setting the telephone number of the Center
   1. Select [Service Mode] -> [CS Remote Care] -> [Maintenance/Default Settings], and touch [Detail Setting].
   2. Touch [Machine Setting] -> [Center Telephone Number].
   3. Input the telephone number of the center using the 10-key pad and [P], [T], [W], [-].
11. Inputting the device telephone number
   1. Select [Service Mode] -> [CS Remote Care] -> [Maintenance/Default Settings], and touch [Detail Setting].
   2. Touch [Basic Setting] -> [Device Telephone Number].
   3. Input the Device telephone number using the10-key pad and [P], [T], [W], [-].
12. Setting the DIPSW for CS Remote Care

**NOTE**
- **This setting is not normally necessary. Take this step only when necessary in a specific connecting condition.**

13. Executing the initial transmission
    1. Select [Service Mode] -> [CS Remote Care] -> [Maintenance/Default Settings], and touch [Detail Setting].
    2. Touch [Basic Setting] -> [Initial Transmission].
    3. Touch [initial transmission] key on the right bottom of the screen to start initial transmission.
    4. When the machine is properly connected with the center, CS Remote Care setting screen will be displayed.

    **NOTE**
    - **The initial transmission key at the right bottom of the screen will be displayed only when the center ID, the device ID, Telephone number of the center and the device telephone number have been input.**
      **However, if an invalid value is input as the device ID, the initial transmission key is not displayed.**

### 5.8.3 Using the E-mail

1. Register the device ID
   - Register the device ID to the application at CS Remote Care center.

   **NOTE**
   - **The initial connection is not available unless the device ID is registered.**
2. Remove the telephone line modem
   - Be sure to remove the telephone line modem when e-mail is used.
3. Inputting the ID code
   1. Select [Service Mode] -> [CS Remote Care] -> [Maintenance/Default Settings], and touch [ID Code].
   2. Input the seven digits ID of the service person, and touch [ID Code] again.
4. Clearing the RAM
   1. Select [Service Mode] -> [CS Remote Care] -> [Maintenance/Default Settings], and touch [Detail Setting].
   2. Touch [RAM Clear].
   3. Select [Set], and touch [OK].
5. Selecting the CS Remote Care function
   - Select [Service Mode] -> [CS Remote Care] -> [Maintenance/Default Settings] -> [System Setting], and touch [E-Mail 1] or [E-Mail 2].
6. Inputting the ID code
   1. Select [Service Mode] -> [CS Remote Care] -> [Maintenance/Default Settings], and touch [ID Code].
   2. Input the seven digits ID of the service person, and touch [ID Code] again.
7. Setting the date and time for CS Remote Care
   1. Select [Service Mode] -> [CS Remote Care] -> [Maintenance/Default Settings], and touch [Detail Setting].
   2. Touch [Date & Time Setting].
   3. Input the date, time and the time zone using the 10-key pad, and touch [Set].
8. Setting the Center ID
   1. Select [Service Mode] -> [CS Remote Care] -> [Maintenance/Default Settings], and touch [Detail Setting].
   2. Touch [Machine Setting] -> [Center ID], and input the Center ID (five digits).
9. Confirm the Device ID
   1. Select [Service Mode] -> [CS Remote Care] -> [Maintenance/Default Settings], and touch [Detail Setting].
   2. Touch [Machine Setting] -> [Device ID], and input Device ID (13 digits).

   **NOTE**
   - **[Device ID] displays the serial number that is entered in [Service Mode] -> [System 1] -> [Serial Number].**
10. Encryption setting
    1. Select [Service Mode] -> [CS Remote Care] -> [Maintenance/Default Settings], and touch [Detail Setting].
    2. Touch [Basic Setting] and select either Encryption or No Encryption.
11. Retransmission interval on e-mail delivery error
    - When selecting [E-mail 2], set the retransmission interval on e-mail delivery error in software SW setting.
12. Setting the Respond Timeout
    1. Select [Service Mode] -> [CS Remote Care] -> [Maintenance/Default Settings], and touch [Detail Setting].
    2. Touch [Respond Timeout] and enter the response timeout using the 10-key pad.

    **NOTE**
    - **Under normal conditions, there is no need to change the default setting.**
13. Setting the E-mail address
    1. Select [Service Mode] -> [CS Remote Care] -> [Maintenance/Default Settings], and touch [Server Set].
    2. Touch [Server for RX], and set POP3 server address, POP3 login name, POP3 password and POP3 port number.
    3. Touch [Receive], and set the E-Mail address, Mail Check, Connection Time Out and APOP Authentication.
    4. Touch [Send], and set the SMTP server address, SMTP port number, Connection Time Out, and APOP Authentication.
    5. Touch [TX/RX Test], and press Start key to carry out a transmission/reception test. If it fails to exchange messages, see the error message to take necessary measure, and try again.
14. When selecting [E-Mail2]:
    1. Select [Service Mode] -> [CS Remote Care] -> [Maintenance/Default Settings], and touch [Detail Setting].
    2. Touch [Schedule] and set the schedule of periodic transmission.
    3. Touch [Center Notifi. Item] and set items that will be reported to the Center.
15. Receiving the initial connection E-mail message
    - Sending the initial connection E-mail message from the center to the address of the copier.

    **NOTE**
    - **When receiving the initial connection E-mail message from the center while CS Remote Care-related screen is being displayed, the current setting information will be deleted, and CS Remote Care setting will be displayed.**
    - **For sending the initial connection E-mail, see the manual for CS Remote Care center.**
    - **Messages can be exchanged only between the center with initial connection and the copier.**
    - **The initial connection from the center will be carried out, and the E-mail address of the center will be stored in the copier.**
    - **When the initial registration is complete, the E-mail address of the center will be displayed by selecting [Service Mode] -> [CS Remote Care] -> [Maintenance/Default Settings] -> [Detail Setting] -> [Basic Setting] -> [E-Mail address].**

### 5.8.4 When using a WebDAV server in http communication

**NOTE**

- **When MFP is connected to the Internet via a proxy, the proxy server related settings are necessary in advance. The proxy settings used in the http communication for CS Remote Care is configured in [Administrator Settings] -> [Network Settings] -> [WebDAV Settings] -> [Proxy Setting for Remote Access].**

#### (1) Bilateral communication

1. Register the device ID
   - Register the device ID to the application at CS Remote Care center.
     **NOTE**
     - **The initial connection is not available unless the device ID is registered.**
2. Remove the telephone line modem
   - Be sure to remove the telephone line modem when the http communication is used.
3. Inputting the ID code
   1. Select [Service Mode] -> [CS Remote Care] -> [Maintenance/Default Settings], and touch [ID Code].
   2. Input the seven digits ID of the service person, and touch [ID Code] again.
4. Clearing the RAM
   1. Select [Service Mode] -> [CS Remote Care] -> [Maintenance/Default Settings], and touch [Detail Setting].
   2. Touch [RAM Clear].
   3. Select [Set], and touch [OK].
5. Selecting the CS Remote Care function
   - Select [Service Mode] -> [CS Remote Care] -> [Maintenance/Default Settings] -> [System Selection], and touch [http1].
6. Inputting the ID code
   1. Select [Service Mode] -> [CS Remote Care] -> [Maintenance/Default Settings], and touch [ID Code].
   2. Input the seven digits ID of the service person, and touch [ID Code] again.
7. Setting the date and time for CS Remote Care
   1. Select [Service Mode] -> [CS Remote Care] -> [Maintenance/Default Settings], and touch [Detail Setting].
   2. Touch [Date & Time Setting].
   3. Input the date, time and the time zone using the 10-key pad, and touch [Set].
8. Setting the Center ID
   1. Select [Service Mode] -> [CS Remote Care] -> [Maintenance/Default Settings], and touch [Detail Setting].
   2. Touch [Machine Setting] -> [Center ID], and input the Center ID (five digits).
9. Confirm the Device ID
   1. Select [Service Mode] -> [CS Remote Care] -> [Maintenance/Default Settings], and touch [Detail Setting].
   2. Touch [Machine Setting] -> [Device ID], and input Device ID (13 digits).
      **NOTE**
      - **[Device ID] displays the serial number that is entered in [Service Mode] -> [System 1] -> [Serial Number].**
10. Encryption setting
    1. Select [Service Mode] -> [CS Remote Care] -> [Maintenance/Default Settings], and touch [Detail Setting].
    2. Touch [Basic Setting] -> [Client Setting] and select either Encryption or No Encryption.
11. Heart Beat
    1. Select [Service Mode] -> [CS Remote Care] -> [Maintenance/Default Settings]] -> [Detail Setting] -> [Basic Setting], and touch [Heart Beat].
    2. In [Communication], set whether or not to enable Heart Beat communication. (Default: No)
    3. Touch [Comm. Interval] and enter a Heart Beat transmission interval (1 to 256 minutes, Default: 30 minutes).
    4. In [Specified Transmission], set whether or not to enable Heart Beat transmission at a specified interval. (Default: Yes)
    5. Touch [Hour] and [Minute] and enter a time for specified transmission.
       **NOTE**
       - **Heart Beat is a feature that uploads a Heart Beat file to the registered web server at a specified interval to report that the device is operating. Heart Beat files include total counter and status information.**
12. Polling interval
    1. Select [Service Mode] -> [CS Remote Care] -> [Maintenance/Default Settings] -> [Detail Setting].
    2. Touch [Polling Interval] and enter the polling interval (1 to 256 min., default: 5 min.).
13. Setting the http server
    1. Select [Service Mode] -> [CS Remote Care], and touch [Server Settings].
    2. Touch [HTTP Server Settings] and set a URL address, account, password, and port number.
    3. Touch [SSL Settings] and make SSL settings.
14. Setting the DIPSW for CS Remote Care
    **NOTE**
    - **This setting is not normally necessary. Take this step only when necessary in a specific connecting condition.**
15. Executing the initial transmission
    1. Select [Service Mode] -> [CS Remote Care] -> [Maintenance/Default Settings], and touch [Detail Setting].
    2. Touch [initial transmission] key on the right bottom of the screen to start initial transmission.
       **NOTE**
       - **The initial transmission key at the right bottom of the screen will be displayed only when the center ID, device ID and the URL address have been input.**
         **However, if an invalid value is input as the device ID, the initial transmission key is not displayed.**
    3. When the machine is properly connected with the center, CS Remote Care setting screen will be displayed.
    - If communication error between the machine and Center occurs, check the error code that appears.

#### (2) Unilateral communication: Device to Center

1. Register the device ID
   - Register the device ID to the application at CS Remote Care center.

**NOTE**
- **The initial connection is not available unless the device ID is registered.**

2. Remove the telephone line modem
   - Be sure to remove the telephone line modem when the http communication is used.
3. Inputting the ID code
   1. Select [Service Mode] -> [CS Remote Care] -> [Maintenance/Default Settings], and touch [ID Code].
   2. Input the seven digits ID of the service person, and touch [ID Code] again.
4. Clearing the RAM
   1. Select [Service Mode] -> [CS Remote Care] -> [Maintenance/Default Settings], and touch [Detail Setting].
   2. Touch [RAM Clear].
   3. Select [Set], and touch [OK].
5. Selecting the CS Remote Care function
   - Select [Service Mode] -> [CS Remote Care] -> [Maintenance/Default Settings] -> [System Selection], and touch [http2].
6. Inputting the ID code
   1. Select [Service Mode] -> [CS Remote Care] -> [Maintenance/Default Settings], and touch [ID Code].
   2. Input the seven digits ID of the service person, and touch [ID Code] again.
7. Setting the date and time for CS Remote Care
   1. Select [Service Mode] -> [CS Remote Care] -> [Maintenance/Default Settings], and touch [Detail Setting].
   2. Touch [Date & Time Setting].
   3. Input the date, time and the time zone using the 10-key pad, and touch [Set].
8. Setting the Center ID
   1. Select [Service Mode] -> [CS Remote Care] -> [Maintenance/Default Settings], and touch [Detail Setting].
   2. Touch [Machine Setting] -> [Center ID], and input the Center ID (five digits).
9. Confirm the Device ID
   1. Select [Service Mode] -> [CS Remote Care] -> [Maintenance/Default Settings], and touch [Detail Setting].
   2. Touch [Machine Setting] -> [Device ID], and input Device ID (13 digits).

      **NOTE**
      - **[Device ID] displays the serial number that is entered in [Service Mode] -> [System 1] -> [Serial Number].**
10. Encryption setting
    1. Select [Service Mode] -> [CS Remote Care] -> [Maintenance/Default Settings], and touch [Detail Setting].
    2. Touch [Basic Setting] -> [Client Setting] and select either Encryption or No Encryption.
11. Notification Setting
    1. Select [Service Mode] -> [CS Remote Care] -> [Maintenance/Default Settings] -> [Detail Setting], and touch [Notification Setting].
    2. Touch [Schedule] and set the schedule of periodic transmission.
    3. Touch [Center Notifi. Item] and set items that will be reported to the Center.
12. Setting the http server
    1. Select [Service Mode] -> [CS Remote Care], and touch [Server Set].
    2. Touch [HTTP Server Settings] and set a URL address, account, password, and port number.
    3. Touch [SSL Settings] and make SSL settings.
13. Setting the DIPSW for CS Remote Care

    **NOTE**
    - **This setting is not normally necessary. Take this step only when necessary in a specific connecting condition.**

14. Executing the initial transmission
    1. Select [Service Mode] -> [CS Remote Care] -> [Maintenance/Default Settings], and touch [Detail Setting].
    2. Touch [initial transmission] key on the right bottom of the screen to start initial transmission.

       **NOTE**
       - **The initial transmission key at the right bottom of the screen will be displayed only when the center ID, device ID and the URL address have been input.**
         **However, if an invalid value is input as the device ID, the initial transmission key is not displayed.**

    3. When the machine is properly connected with the center, CS Remote Care setting screen will be displayed.
    - If communication error between the machine and Center occurs, check the error code that appears.

## 5.9 Software SW setting for CS Remote Care

### List of software SW for CS Remote Care

**NOTE**
- **Software SW bits data are written into the memory region on the MFP board every time a change is made. In case you changed bit data by accident, be sure to restore the previous state.**
- **Do not change any bit not described on this table.**

### 5.9.1 Input procedure

1. Select [Service Mode] -> [CS Remote Care] -> [Maintenance/Default Settings] -> [Detail Setting], and touch [Software Switch Setting].
2. Touch [Switch No.], and input the switch number (two digits) using the 10-key pad.
3. Touch [Bit Assignment], and select switch bit number using the arrow keys, and input 0 or 1 using the 10-key pad.
   (For setting by hexadecimal numbers, touch [HEX Assignment] key, and input using the 10-key pad or A to F keys.)
4. Touch [Fix].

**NOTE**
- **About functions of each switch, see to "I.5.9.2 List of software SW for CS Remote Care."**

### 5.9.2 List of software SW for CS Remote Care

| SW No. | Functions | Ref. page |
|---|---|---|
| 01 | • Dial Mode, Line for send only, Baud rate | "I.5.9.3 SW No. 01" |
| 02 | • Emergency transmission, Date specified transmission, Call parts replace date, Call drum replace date, Call regular service date (PM), Auto call on the IC Life, | "I.5.9.4 SW No. 02" |

| SW No. | Functions | Ref. page |
|---|---|---|
| | Auto call of the IR shortage, Auto call on the zero reset of the fixed parts replacement | |
| 03 | • Trouble display setting, Auto call on the toner empty, Auto call on the waste toner bottle full | "I.5.9.5 SW No. 03" |
| 04 | • CS Remote Care communication mode | "I.5.9.6 SW No. 04" |
| 05 | • Modem redial interval | "I.5.9.7 SW No. 05" |
| 06 | • Modem redial times | "I.5.9.8 SW No. 06" |
| 07 | • Redial for response time out | "I.5.9.9 SW No. 07" |
| 08 | • Retransmission interval on E-Mail/http delivery error | "I.5.9.10 SW No. 08" |
| 09 | • Retransmission times on E-Mail/http delivery error | "I.5.9.11 SW No. 09" |
| 10 | • Time zone settings | "I.5.9.12 SW No. 10" |
| 11 | • Timer 1 RING reception -> CONNECT reception | "I.5.9.13 SW No. 11" |
| 12 | • Timer 2 Dial request completed -> CONNECT reception | "I.5.9.14 SW No. 12" |
| 13 | • Reservation | - |
| 14 | • Timer 4 Line connection -> Start request telegram delivery | "I.5.9.15 SW No. 14" |
| 15 | • Timer 5 Wait time for other side's response | "I.5.9.16 SW No. 15" |
| 16 | • Reservation | - |
| 17 | • Reservation | - |
| 18 | • Attention display<br>To set whether to give the alarm display when using the modem but the power for the modem is OFF. | "I.5.9.17 SW No. 18" |
| 19 | • Reservation | - |
| 20 | • Reservation | - |
| 21 | • Automatic transmission of chronological misfeed data at the time of transmission of misfeed frequent occurrence warning, transmission of paper-based misfeed frequent occurrence warning, transmission of original-based misfeed frequent occurrence warning | "I.5.9.18 SW No. 21" |
| 22 | • Paper-based misfeed frequent occurrence threshold value | "I.5.9.19 SW No. 22" |
| 23 | • Original-based misfeed frequent occurrence threshold value | "I.5.9.20 SW No. 23" |
| 24<br>:<br>40 | • Reservation | - |

### 5.9.3 SW No. 01

#### (1) Default

| Bit | 7 | 6 | 5 | 4 | 3 | 2 | 1 | 0 |
|---|---|---|---|---|---|---|---|---|
| | 1 | 0 | 0 | 0 | 0 | 0 | 0 | 1 |
| HEX | 81 | | | | | | | |

#### (2) Functions

| Bit | Functions | Logic | | Description |
|---|---|---|---|---|
| | | 0 | 1 | |
| 7 | Baud rate | 0110 | | 9600 bps |
| 6 | | 0111 | | 19.2 Kbps |
| 5 | | 1000 | | 38.4 Kbps |
| 4 | | Other | | Not available |
| 3 | Reservation | | | |
| 2 | | | | |
| 1 | Line for send only | Disable | Enable | |
| 0 | Dial Mode | Pulse | Tone | |

### 5.9.4 SW No. 02

#### (1) Default

| Bit | 7 | 6 | 5 | 4 | 3 | 2 | 1 | 0 |
|---|---|---|---|---|---|---|---|---|
| | 1 | 1 | 1 | 1 | 1 | 1 | 1 | 1 |
| HEX | FF | | | | | | | |

**(2) Functions**

| Bit | Functions | Logic | | Description |
|---|---|---|---|---|
| | | 0 | 1 | |
| 7 | Auto call on the zero reset of the fixed parts replacement | Disable | Enable | |
| 6 | Auto call of the IR shortage | Disable | Enable | |
| 5 | Auto call on the IC Life | Disable | Enable | |
| 4 | Call regular service date (PM) | Disable | Enable | |
| 3 | Call drum replace date | Disable | Enable | |
| 2 | Call parts replace date | Disable | Enable | |
| 1 | Date specified transmission | Disable | Enable | |
| 0 | Emergency transmission | Disable | Enable | |

### 5.9.5 SW No. 03

**(1) Default**

| Bit | 7 | 6 | 5 | 4 | 3 | 2 | 1 | 0 |
|---|---|---|---|---|---|---|---|---|
| | 0 | 0 | 0 | 0 | 1 | 0 | 1 | 0 |
| HEX | 0A | | | | | | | |

**(2) Functions**

| Bit | Functions | Logic | | Description |
|---|---|---|---|---|
| | | 0 | 1 | |
| 7 | Reservation | | | |
| 6 | | | | |
| 5 | | | | |
| 4 | | | | |
| 3 | Auto call on the waste toner bottle full | Disable | Enable | |
| 2 | Reservation | | | |
| 1 | Auto call on the toner empty | Disable | Enable | |
| 0 | Trouble Display setting | When the CSRC is not connected | When the CSRC is connected | Select the type of message to be displayed at the time of automatic trouble notification made when the CSRC is connected, either the message when the CSRC is connected or that when the CSRC is not connected.<br>If "When the CSRC is not connected" is selected when the CSRC is connected, an automatic notification is made to the center when a trouble occurred. Only the display on the control panel shifts to the massage when the CSRC is not connected. |

### 5.9.6 SW No. 04

**(1) Default**

| Bit | 7 | 6 | 5 | 4 | 3 | 2 | 1 | 0 |
|---|---|---|---|---|---|---|---|---|
| | 0 | 0 | 0 | 0 | 0 | 0 | 1 | 0 |
| HEX | 02 | | | | | | | |

**(2) Functions**

| Bit | Functions | Logic | | Description |
|---|---|---|---|---|
| | | 0 | 1 | |
| 7 | Reservation | | | |
| 6 | | | | |
| 5 | | | | |
| 4 | | | | |

| Bit | Functions | Logic | | Description |
|---|---|---|---|---|
| | | 0 | 1 | |
| 3 | | | | |
| 2 | | | | |
| 1 | CS Remote Care communication mode | 00 | | DATA |
| 0 | | 01 | | FAX |
| | | 10 | | E-mail |
| | | 11 | | Not available |

### 5.9.7 SW No. 05

#### (1) Default

| Bit | 7 | 6 | 5 | 4 | 3 | 2 | 1 | 0 |
|---|---|---|---|---|---|---|---|---|
| | 0 | 0 | 0 | 0 | 0 | 0 | 1 | 1 |
| HEX | 03 | | | | | | | |

#### (2) Functions

| Bit | Functions | Logic | | Description |
|---|---|---|---|---|
| | | 0 | 1 | |
| 7 | Reservation | | | |
| 6 | | | | |
| 5 | | | | |
| 4 | Modem redial interval | 00001 | | 1 minute |
| 3 | | 00010 | | 2 minutes |
| 2 | | 00011 | | 3 minutes |
| 1 | | 00100 | | 4 minutes |
| 0 | | 00101 | | 5 minutes |
| | | 00110 | | 6 minutes |
| | | 00111 | | 7 minutes |
| | | 01000 | | 8 minutes |
| | | 01001 | | 9 minutes |
| | | 01010 | | 10 minutes |
| | | Others | | Not available |

### 5.9.8 SW No. 06

#### (1) Default

| Bit | 7 | 6 | 5 | 4 | 3 | 2 | 1 | 0 |
|---|---|---|---|---|---|---|---|---|
| | 0 | 0 | 0 | 0 | 1 | 0 | 1 | 0 |
| HEX | 0A | | | | | | | |

#### (2) Functions

| Bit | Functions | Logic | | Description |
|---|---|---|---|---|
| | | 0 | 1 | |
| 7 | Modem redial times | 0000 0000 | | 0 times |
| 6 | | 0000 0001 | | 1 time |
| 5 | | : | | : |
| 4 | | 0000 1010 | | 10 times |
| 3 | | : | | : |
| 2 | | 0110 0010 | | 98 times |
| 1 | | 0110 0011 | | 99 times |
| 0 | | Others | | Not available |

### 5.9.9 SW No. 07

#### (1) Default

| Bit | 7 | 6 | 5 | 4 | 3 | 2 | 1 | 0 |
|---|---|---|---|---|---|---|---|---|
| | 0 | 0 | 0 | 0 | 0 | 0 | 0 | 1 |
| HEX | 01 | | | | | | | |

**(2) Functions**

| Bit | Functions | Logic | | Description |
|---|---|---|---|---|
| | | 0 | 1 | |
| 7 | Redial for response time out | 0000 0000 | | 0 times |
| 6 | | 0000 0001 | | 1 time |
| 5 | | Others | | Not available |
| 4 | | | | |
| 3 | | | | |
| 2 | | | | |
| 1 | | | | |
| 0 | | | | |

### 5.9.10 SW No. 08

**(1) Default**

| Bit | 7 | 6 | 5 | 4 | 3 | 2 | 1 | 0 |
|---|---|---|---|---|---|---|---|---|
| | 0 | 0 | 0 | 0 | 0 | 1 | 1 | 0 |
| HEX | 06 | | | | | | | |

**(2) Functions**

| Bit | Functions | Logic | | Description |
|---|---|---|---|---|
| | | 0 | 1 | |
| 7 | Retransmission interval on E-mail/http delivery error | 0000 0000 | | 0 minutes |
| 6 | | 0000 0001 | | 10 minutes |
| 5 | | : | | : |
| 4 | | 0000 0110 | | 60 minutes |
| 3 | | : | | : |
| 2 | | 0000 1011 | | 110 minutes |
| 1 | | 0000 1100 | | 120 minutes |
| 0 | | Others | | Not available |

### 5.9.11 SW No. 09

**(1) Default**

| Bit | 7 | 6 | 5 | 4 | 3 | 2 | 1 | 0 |
|---|---|---|---|---|---|---|---|---|
| | 0 | 0 | 0 | 0 | 1 | 0 | 1 | 0 |
| HEX | 0A | | | | | | | |

**(2) Functions**

| Bit | Functions | Logic | | Description |
|---|---|---|---|---|
| | | 0 | 1 | |
| 7 | Retransmission times on E-mail/http delivery error | 0000 0000 | | 0 times |
| 6 | | 0000 0001 | | 1 time |
| 5 | | : | | : |
| 4 | | 0000 1010 | | 10 times |
| 3 | | : | | : |
| 2 | | 0110 0010 | | 98 times |
| 1 | | 0110 0011 | | 99 times |
| 0 | | Others | | Not available |

### 5.9.12 SW No. 10

**(1) Default**

| Bit | 7 | 6 | 5 | 4 | 3 | 2 | 1 | 0 |
|---|---|---|---|---|---|---|---|---|
| | 0 | 0 | 0 | 0 | 0 | 0 | 0 | 0 |
| HEX | 00 | | | | | | | |

**(2) Functions**

| Bit | Functions | Logic | | Description |
|---|---|---|---|---|
| | | 0 | 1 | |
| 7 | Time zone settings | 0000 0000 | | 0 |

| Bit | Functions | Logic | | Description |
|---|---|---|---|---|
| | | 0 | 1 | |
| 6 | | 0000 0001 | | +1 |
| 5 | | : | | : |
| 4 | | 0000 1100 | | +12 |
| 3 | | 1111 0100 | | -12 |
| 2 | | : | | : |
| 1 | | 1111 1111 | | -1 |
| 0 | | Others | | Not available |

### 5.9.13 SW No. 11

#### (1) Default

| Bit | 7 | 6 | 5 | 4 | 3 | 2 | 1 | 0 |
|---|---|---|---|---|---|---|---|---|
| | 0 | 0 | 1 | 0 | 0 | 0 | 0 | 0 |
| HEX | 20 | | | | | | | |

#### (2) Functions

| Bit | Functions | Logic | | Description |
|---|---|---|---|---|
| | | 0 | 1 | |
| 7 | Timer 1<br>RING reception -> CONNECT reception | 0000 0000 | | 0 sec |
| 6 | | 0000 0001 | | 1 sec |
| 5 | | : | | : |
| 4 | | 0010 0000 | | 32 sec |
| 3 | | : | | : |
| 2 | | 1111 1110 | | 254 sec |
| 1 | | 1111 1111 | | 255 sec |
| 0 | | | | |

### 5.9.14 SW No. 12

#### (1) Default

| Bit | 7 | 6 | 5 | 4 | 3 | 2 | 1 | 0 |
|---|---|---|---|---|---|---|---|---|
| | 0 | 1 | 0 | 0 | 0 | 0 | 0 | 0 |
| HEX | 40 | | | | | | | |

#### (2) Functions

| Bit | Functions | Logic | | Description |
|---|---|---|---|---|
| | | 0 | 1 | |
| 7 | Timer 2<br>Dial request completed -> CONNECT reception | 0000 0000 | | 0 sec |
| 6 | | 0000 0001 | | 1 sec |
| 5 | | : | | : |
| 4 | | 0100 0000 | | 64 sec |
| 3 | | : | | : |
| 2 | | 1111 1110 | | 254 sec |
| 1 | | 1111 1111 | | 255 sec |
| 0 | | | | |

### 5.9.15 SW No. 14

#### (1) Default

| Bit | 7 | 6 | 5 | 4 | 3 | 2 | 1 | 0 |
|---|---|---|---|---|---|---|---|---|
| | 0 | 0 | 1 | 0 | 0 | 0 | 0 | 0 |
| HEX | 20 | | | | | | | |

#### (2) Functions

| Bit | Functions | Logic | | Description |
|---|---|---|---|---|
| | | 0 | 1 | |
| 7 | Timer 4<br>Line connection -> Start request telegram delivery | 0000 0000 | | 0 msec |
| 6 | | 0000 0001 | | 100 msec |
| 5 | | : | | : |

| Bit | Functions | Logic | | Description |
|---|---|---|---|---|
| | | 0 | 1 | |
| 4 | | 0010 0000 | | 3,200 msec |
| 3 | | : | | : |
| 2 | | 1111 1110 | | 25,400 msec |
| 1 | | 1111 1111 | | 25,500 msec |
| 0 | | | | |

### 5.9.16 SW No. 15

#### (1) Default

| Bit | 7 | 6 | 5 | 4 | 3 | 2 | 1 | 0 |
|---|---|---|---|---|---|---|---|---|
| | 0 | 0 | 0 | 1 | 1 | 1 | 1 | 0 |
| HEX | 1E | | | | | | | |

#### (2) Functions

| Bit | Functions | Logic | | Description |
|---|---|---|---|---|
| | | 0 | 1 | |
| 7 | Timer 5<br>Wait time for other side's response | 0000 0000 | | 0 sec |
| 6 | | 0000 0001 | | 1 sec |
| 5 | | : | | : |
| 4 | | 0001 1110 | | 30 sec |
| 3 | | : | | : |
| 2 | | 1111 1110 | | 254 sec |
| 1 | | 1111 1111 | | 255 sec |
| 0 | | | | |

### 5.9.17 SW No. 18

#### (1) Default

| Bit | 7 | 6 | 5 | 4 | 3 | 2 | 1 | 0 |
|---|---|---|---|---|---|---|---|---|
| | 0 | 0 | 0 | 0 | 0 | 0 | 0 | 1 |
| HEX | 01 | | | | | | | |

#### (2) Functions

| Bit | Functions | Logic | | Description |
|---|---|---|---|---|
| | | 0 | 1 | |
| 7 | Reservation | | | |
| 6 | | | | |
| 5 | | | | |
| 4 | | | | |
| 3 | | | | |
| 2 | | | | |
| 1 | | | | |
| 0 | Attention display<br>To set whether to give the alarm display when using the modem but the power for the modem is OFF. | OFF | ON | |

### 5.9.18 SW No. 21

#### (1) Default

| Bit | 7 | 6 | 5 | 4 | 3 | 2 | 1 | 0 |
|---|---|---|---|---|---|---|---|---|
| | 0 | 0 | 0 | 0 | 0 | 0 | 0 | 0 |
| HEX | 00 | | | | | | | |

#### (2) Functions

| Bit | Functions | Logic | | Description |
|---|---|---|---|---|
| | | 0 | 1 | |
| 7 | Reservation | | | |
| 6 | | | | |

| Bit | Functions | Logic | | Description |
|---|---|---|---|---|
| | | 0 | 1 | |
| 5 | | | | |
| 4 | | | | |
| 3 | | | | |
| 2 | Automatic transmission of chronological misfeed data at the time of transmission of misfeed frequent occurrence warning | OFF | ON | |
| 1 | Original-based misfeed frequent occurrence threshold value | OFF | ON | If the number of jams exceeds the threshold specified per day (0:00 to 23:59), Jam Frequent Occurrence Warning is sent. At 12 a.m. of the next day, the counter is reset. |
| 0 | Paper-based misfeed frequent occurrence threshold value | OFF | OFF | |

### 5.9.19 SW No. 22

#### (1) Default

| Bit | 7 | 6 | 5 | 4 | 3 | 2 | 1 | 0 |
|---|---|---|---|---|---|---|---|---|
| | 0 | 0 | 0 | 0 | 0 | 1 | 0 | 1 |
| HEX | 05 | | | | | | | |

#### (2) Functions

| Bit | Functions | Logic | | Description |
|---|---|---|---|---|
| | | 0 | 1 | |
| 7 | Paper-based misfeed frequent occurrence threshold value | 0000 0001 | | 1 |
| 6 | | 0000 0010 | | 2 |
| 5 | | : | | : |
| 4 | | 0000 0101 | | 5 |
| 3 | | : | | : |
| 2 | | 0000 1110 | | 14 |
| 1 | | 0000 1111 | | 15 |
| 0 | | Others | | Not available |

### 5.9.20 SW No. 23

#### (1) Default

| Bit | 7 | 6 | 5 | 4 | 3 | 2 | 1 | 0 |
|---|---|---|---|---|---|---|---|---|
| | 0 | 0 | 0 | 0 | 0 | 1 | 0 | 1 |
| HEX | 05 | | | | | | | |

#### (2) Functions

| Bit | Functions | Logic | | Description |
|---|---|---|---|---|
| | | 0 | 1 | |
| 7 | Original-based misfeed frequent occurrence threshold value | 0000 0001 | | 1 |
| 6 | | 0000 0010 | | 2 |
| 5 | | : | | : |
| 4 | | 0000 0101 | | 5 |
| 3 | | : | | : |
| 2 | | 0000 1110 | | 14 |
| 1 | | 0000 1111 | | 15 |
| 0 | | Others | | Not available |

## 5.10 Setup confirmation

- Follow the steps below to make sure that CS Remote Care has been properly set up.

1. Call the Service Mode to the screen.
2. Touch [CS Remote Care].
3. Check to make sure that only selected item is displayed.

## 5.11 Calling the maintenance

- When CE starts maintenance, inputting the ID code of CE (seven digits: numbers which CE can identify. They are controlled by the distributor.) will transmit the information to the Center side and tells that the maintenance has started. When the maintenance is finished, touching [Maintenance Complete] key will transmit the information to the center and tells that it is finished.

**NOTE**

- **The MFP sends the maintenance start information to the Center. While the MFP is in maintenance mode, the communication between the MFP and the Center is unavailable. Therefore, CE must touch [Maintenance Complete] immediately after the completion of maintenance to end maintenance mode.**

### 5.11.1 When starting the maintenance

1. Call the Service Mode to the screen.
2. Touch [CS Remote Care].
3. Touch [Maintenance Start].
4. Input the ID code using the 10-key pad.
5. Select estimated hours that elapse before the completion of the maintenance from the options of [2 hours], [4 hours], [6 hours], [8 hours], [10 hours], or [12 hours].
6. Touch [OK].

**NOTE**

- **The Start key blinks while maintenance mode is being carried out.**
- **You cannot extend the estimated hours while the maintenance is in progress.**
- **If you forget to touch [Maintenance Complete] after the completion of the maintenance, the maintenance completion information is automatically sent after the lapse of the selected estimated hours and the normal communication becomes available.**

### 5.11.2 When finishing the maintenance

1. Call the Service Mode to the screen.
2. Touch [CS Remote Care].
3. Touch [Maintenance Complete].

## 5.12 Calling the center from the administrator

- When the CS Remote Care setup is complete, the administrator can call the CS Remote Care center.

1. Touch [Utility] -> [Administrator Settings] -> [System Connection].
2. Touch [Admin. transmission].
3. Press the Start key.
   When the setup is not complete or another transmission is being carried out, the Admin. transmission key will not be displayed, and the transmission is not available.

**NOTE**

- **For transmitting data of the machine by calling the center on the specified date and time, refer to the manual for CS Remote Care center.**

## 5.13 Checking the transmission log

- The transmission log list will be output to be checked.

1. Call the Service Mode to the screen.
2. Touch [CS Remove Care] -> [Maintenance/Default Settings] -> [Detail Setting].
3. Touch [Communication Log Print].
4. Load tray 1 or bypass tray with A4S paper.
5. Press the Start key to output transmission log.

## 5.14 Detail on settings for CS Remote Care

### 5.14.1 Maintenance/Default Settings - System Selection

#### (1) Use

- To select the system type for remote diagnosis.
- Use to newly build or change the system.

#### (2) Setting range

- E-Mail1
- E-Mail2
- Modem
- Fax
- http1
- http2

#### (3) Procedure

- Select [E-Mail 1], [E-Mail 2], [http 1], [http 2], [Modem], or [Fax].
- Fax is available only when the optional fax kit is being installed.

### 5.14.2 Maintenance/Default Settings - ID Code

#### (1) Use

- To register the service ID.

#### (2) Procedure

1. Touch [ID code] and enter the service ID.
   - Enter a 7-digit code from the 10-key pad. (0000001 to 9999999)
2. Touch [ID code] to register the ID.
3. The [Detail Setting] will appear when the ID has been registered.

### 5.14.3 Maintenance/Default Settings - Detail Setting

#### (1) Basic Setting (E-Mail1, E-Mail2, Modem or Fax)

##### (a) Use

- Execute the primary setting.
- Use to register the machine to the CS Remote Care center.

##### (b) Procedure

1. Call the Service Mode to the screen.
2. Touch [CS Remote Care] -> [Maintenance/Default Settings].
3. Touching the [Detail Setting] will display the primary setting.

<Center Setting>

- Set the center ID, Device ID, and the phone No.
- When e-mail is selected for system and all setup procedures are completed, e-mail address of the center is displayed.
  * When entering the phone number, 10-key and keys on the screen have following meanings.

| | |
|---|---|
| [-] Pose | Waits to start transmitting after dialing |
| [W] Wait | Detects the dial tone of the other end |
| [T] Tone dial | Carry out tone dialing |
| [P] Pulse dial | Carry out pulse dialing |
| [*], [#] | To be used as necessary |

<Schedule (Only when the [E-Mail2] is selected)>

- Set the schedule of notification to the center.
- Up to three different notification schedules can be registered.
- Select the notification cycle from [Day], [Week], or [Month].
  When selecting [Day] for the notification cycle, set the Day Frequency.
  When selecting [Week] for the notification cycle, set the Week Frequency and day of the week.
  When selecting [Month], set the Month Frequency and the date of the month.

<Center Notification (Only when the [E-Mail2] is selected)>

- Select the items of data that will be sent to the center in one-way transmission through E-Mail2.
- The following table shows each of the notification item keys and corresponding data.

| | | | |
|---|---|---|---|
| [1] | Sales count data | [7] | EKC data |
| [2] | Error count data | [8] | Adjustment data |
| [3] | Service count data | [9] | Coverage data |
| [4] | Life count data<br>Life cycle data | [10] | Not used |
| [5] | CSRC-System data<br>Device config data | [11] | Not used |
| [6] | History data | [12] | Not used |

**NOTE**

- **Multiple items of data can be selected and sent at one time. However, be sure that only EKC data cannot be sent together with other items of data.**

<Initial Transmission>

- Touching the Initial Transmission key will sent the information to the CS Remote Care center to register the machine.
  (Only when the modem or fax is selected on the system Input.)

#### (2) Basic Setting (http1 or http2)

##### (a) Use

- Execute the primary setting.
- Use to register the machine to the CS Remote Care center.

##### (b) Procedure

1. Call the Service Mode to the screen.
2. Touch [CS Remote Care] -> [Maintenance/Default Settings].
3. Touching the [Detail Setting] will display the primary setting.

<Center Setting>

- Set the center ID.
- Display the device ID.

<Client Setting>

- To set whether or not to encrypt communication.

<Heart Beat>

**NOTE**

- **The heat beat function is only available to http1.**
- To make Heart Beat related settings.
- Heart Beat is a feature that uploads a Heart Beat file to the registered web server at a specified interval to report that the device is operating. Heart Beat files include total counter and status information.

<Polling Interval>

**NOTE**

- **The polling interval function is only available to http1.**
- To set the polling time in http communication.

<Initial Transmission>

- Touching the Initial Transmission key will sent the information to the CS Remote Care center to register the machine.

### (3) Date & Time Setting

#### (a) Use

- To set the data and time-of-day.

#### (b) Procedure

1. Call the Service Mode to the screen.
2. Touch [CS Remote Care] -> [Maintenance/Default Settings].
3. Touch [Detail Setting] to access Date & Time Setting.
4. Enter the date (month, day and year), time-of-day, and the time zone from the 10-key pad.
5. Touch [SET] to start the clock.

### (4) RAM Clear

#### (a) Use

- To clear the following data at the center.
  Service ID, Basic setting, Date & time setting (time zone), Software SW setting, AT command
- To be used for setting CS Remote Care.
- To be used for reset the every data of the center to default.

**NOTE**

- **If RAM clear is selected during transmission, RAM clear processing will be implemented at the time the transmission is completed regardless of whether it is done properly or not.**

#### (b) Default setting

- Unset

#### (c) Setting item

- Set
- Unset

### (5) Communication Log Print

#### (a) Use

- To print out the communication log.

#### (b) Procedure

1. Call the Service Mode to the screen.
2. Touch [CS Remote Care] -> [Maintenance/Default Settings].
3. Touch [Detail Setting] to access communication log print.
4. Load a paper tray with A4S/A4 or 81/2 x 11S/81/2 x 11 paper.
5. Select [1-Sided] or [2-Sided].
6. Press Start key to print out the communication log.

### (6) Software Switch Setting

#### (a) Use

- To change the CS Remote Care settings.

#### (b) Procedure

- Refer to "I.5.9 List of software SW for CS Remote Care" for the setting.

### (7) Response Time Out

#### (a) Use

- It sets the intervals for resending e-mails when transmission error occurred.
- It can be set only when [E-Mail] is selected in [System Setting].

#### (b) Default setting

- 60 minutes

#### (c) Setting range

- 10 to 1440

### (8) AT Command

#### (a) Use

- To set the command to be issued at the time of modem initialization.

- This setting is available only when [Modem] is selected in [System Setting].

#### (b) Procedure

- Enter the command and touch [SET] to register.

### (9) Notification Setting

#### (a) Use

- To make the settings of notification to the center that is performed under unilateral communication via http.
- This setting is available only when [http2] is selected in [System Setting].

#### (b) Procedure

<Schedule>

- Set the schedule of notification to the center.
- Up to three different notification schedules can be registered.
- Select the key of the registration number, and then touch [Enable].
- Select the notification cycle from [Day], [Week], or [Month].
  When selecting [Day] for the notification cycle, set the Day Frequency.
  When selecting [Week] for the notification cycle, set the Week Frequency and day of the week.
  When selecting [Month], set the Month Frequency and the date of the month.
- Touch [SET] to register the schedule.

<Center Notifi. Item>

- Select the notification item to the center.
- The following table shows each of the notification item keys and corresponding data.

| | | | |
|---|---|---|---|
| [1] | Sales count data | [7] | EKC data |
| [2] | Error count data | [8] | Adjustment data |
| [3] | Service count data | [9] | Coverage data |
| [4] | Life count data<br>Life cycle data | [10] | Not used |
| [5] | CSRC-System data<br>Device config data | [11] | Not used |
| [6] | History data | [12] | Not used |

**NOTE**

- **Multiple items of data can be selected and sent at one time. However, be sure that only EKC data cannot be sent together with other items of data.**

## 5.14.4 Maintenance/Default Settings - Server Setting (E-Mail1 or E-mail2 is selected.)

### (1) Server for RX-POP3 server

#### (a) Use

- To set the POP3 server address used for the CS Remote Care.
- POP3 server address can be set with IP address or the domain name.

#### (b) Procedure

<Input IP Address>

- IP address version 4 format
  [0 to 255].[0 to 255].[0 to 255].[0 to 255]

<FQDN Input>

- Enter the domain name.

### (2) Server for RX-POP3 login name

#### (a) Use

- To set the login name for the POP3 server used for the CS Remote Care.

#### (b) Procedure

- Up to 64 characters can be used. (alphanumeric characters and symbols)

#### (c) Default setting

- No

### (3) Server for RX-POP3 password

#### (a) Use

- To set the logon password for the POP3 server used for the CS Remote Care.

#### (b) Procedure

- Up to 15 characters can be used. (alphanumeric characters and symbols)

#### (c) Default setting

- No

### (4) Server for RX-POP3 port number

#### (a) Use

- To set the POP3 port number used for the CS Remote Care.

#### (b) Default setting

- 110

#### (c) Setting range

- 1 to 65535

### (5) Receive-E-mail Address

#### (a) Use

- To set the e-mail address used for the CS Remote Care.

#### (b) Procedure

- Up to 129 characters can be used. (alphanumeric characters and symbols)

#### (c) Default setting

- No

### (6) Receive-Mail Check

#### (a) Use

- To set whether or not to use mail check and the time interval for the POP server used for the CS Remote Care.

#### (b) Default setting

- No

#### (c) Setting item

- No
- 1 to 120 min.

### (7) Receive-Connection Time-out

#### (a) Use

- To set the timeout period for connection during reception.

#### (b) Default setting

- 60 Sec

#### (c) Setting range

- 30 to 300 Sec

### (8) Receive-APOP Authentication

#### (a) Use

- To set whether or not to authenticate the APOP during reception.

#### (b) Default setting

- No

#### (c) Setting item

- Yes
- No

### (9) Send-SMTP server

#### (a) Use

- To set the SMTP sever address for transmission used for the CS Remote Care.
- SMTP server address can be set by the IP address or the domain name.

#### (b) Procedure

<Input IP Address>

- IP address version 4 format
  [0 to 255].[0 to 255].[0 to 255].[0 to 255]

<FQDN Input>

- Enter the domain name.

### (10) Send-SMTP port number

#### (a) Use

- To set the SMTP port number for transmission used for the CS Remote Care.

#### (b) Default setting

- 25

#### (c) Setting range

- 1 to 65535

### (11) Send-SMTP Connection Time-out

#### (a) Use

- To set the timeout period for transmission.

#### (b) Default setting

- 60 Sec

#### (c) Setting range

- 30 to 300 Sec

### (12) Send-Authentication Setting

#### (a) Use

- To set whether or not to authenticate during transmission via SMTP server.
- To use when authenticating during transmission.
  Available authentication mode: POP Before SMTP, SMTP authentication

#### (b) Default setting

- OFF

#### (c) Setting item

- OFF
- POP Before SMTP
- SMTP Authentication

**NOTE**

- **Setting to "POP Before SMTP" will set the time for POP Before SMTP.**
  - **Default setting: 60 Sec**
  - **Setting range: 0 to "60 Sec"**
- When setting to SMTP authentication, touch the "Setting Check" key for authentication.

| | |
|---|---|
| User ID | Enter the user ID for SMTP authentication. |
| Password | Enter the password for SMTP authentication. |
| Domain name | Enter the domain name for SMTP authentication. |

### (13) TX/RX Test

#### (a) Use

- To determine the correct transmission and reception using CS Remote Care.

#### (b) Procedure

1. Press the Start key to let the machine start the transmission and reception test.
2. The test procedure and result will be displayed on the screen.

### (14) Data Initialization

#### (a) Use

- To initialize the contents for the sever setting.

#### (b) Default setting

- No

#### (c) Setting item

- Yes
- No

### 5.14.5 Maintenance/Default Settings - Server Setting (http1 or http2 is selected)

#### (1) HTTP Server Settings

##### (a) Use

- To set a http server at the other end that is used in CS Remote Care.

##### (b) Procedure

<URL>
- To set the address of the http server.

<Account>
- To set an account that is used to access the http server.

<Password>
- To set a password that is used to access the http server.

<Port Number>
- To set a port number that is used to access the http server.

#### (2) SSL Settings

##### (a) Use

- To make SSL settings of the http server at the other end that is used in CS Remote Care.

##### (b) Procedure

- To set whether or not to use SSL communication.

#### (3) Data Initialization

##### (a) Use

- To initialize values in the server settings.

### 5.14.6 Product Auth. Settings

#### (1) Product Authentication

##### (a) Use

- To set whether or not to enable product authentication.

**NOTE**
- **When changing this setting under the condition where http is used for CS Remote Care communication, you need to perform RAM Clear and then initial transmission again.**

##### (b) Default setting

- No

##### (c) Setting item

- Yes
- No

#### (2) WebDAV

##### (a) Use

- To set a WebDAV server for the product authentication.

##### (b) Procedure

<URL>
- To set the address of the WebDAV server.

<Account>
- To set an account that is used to access the WebDAV server.

<Password>
- To set a password that is used to access the WebDAV server.

<Port Number>
- To set a port number that is used to access the WebDAV server.

#### (3) Register Manually

##### (a) Use

- To install the certificate to be used in product authentication.

##### (b) Procedure

<LMS>
1. Call the Service Mode to the screen.
2. Touch [CS Remote Care] -> [Product Auth. Settings].
3. Touch [Register Manually] -> [LMS].
4. Touch [Start] to communicate with LMS (License Management System) and install the certificate.
5. Check that the "Install OK" message appears.

<USB>
1. Connect the USB flash drive where the certificate obtained from LMS (License Management System) is stored to the USB port of MFP.

2. Call the Service Mode to the screen.
3. Touch [CS Remote Care] -> [Product Auth. Settings].
4. Touch [Register Manually] -> [USB].
5. Touch [Start] to install the certificate.
6. Check that the "Install OK" message appears.

### 5.14.7 Import/Export Settings

#### (1) WebDAV Setting

##### (a) Use

- To configure WebDAV server settings used to remotely export or import MFP data (address book data, authentication setting data).

##### (b) Procedure

<URL>
- To set the address of the WebDAV server.

<Folder Name>
- To set a folder name of the WebDAV server that is used to transfer data.

<Account>
- To set an account that is used to access the WebDAV server.

<Password>
- To set a password that is used to access the WebDAV server.

#### (2) Port Number

##### (a) Use

- To set a port number that is used to access the WebDAV server.

##### (b) Procedure

- Set the port number of the WebDAV server using the 10-key pad.

#### (3) SSL Settings

##### (a) Use

- To configure the WebDAV server's SSL settings.

##### (b) Default setting

- No

##### (c) Setting item

- Yes
- No

#### (4) Data Initialization

##### (a) Use

- To initialize the settings on the server.

##### (b) Default setting

- No

##### (c) Setting item

- Yes
- No

## 5.15 System 1

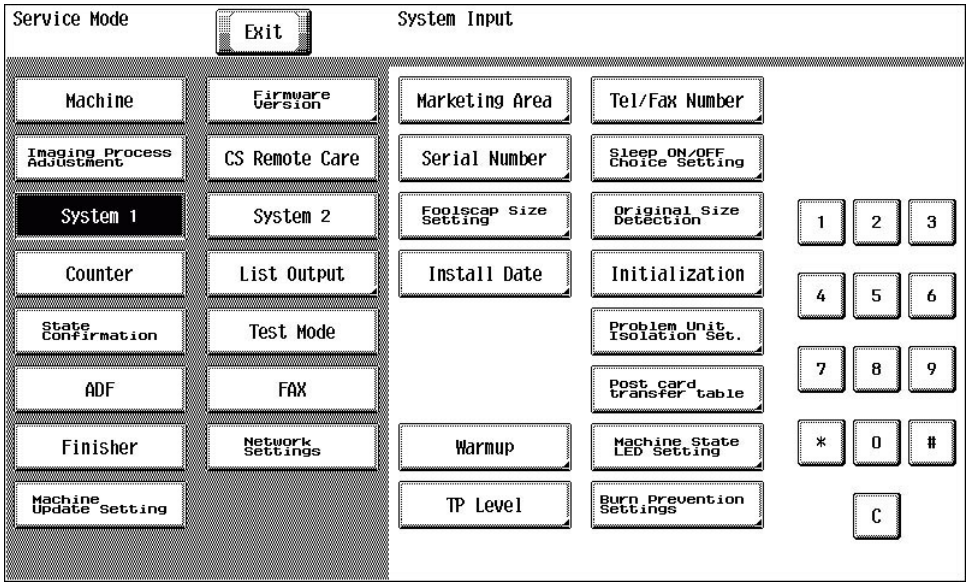


### 5.15.1 Marketing Area

#### (1) Use

- To make the various settings (language, paper size, fixed zoom ratios, etc.) according to the applicable marketing area.
- Upon setup.

#### (2) Procedure

Marketing Area

- Select the applicable marketing area and touch [END] to set the marketing area.

Wireless LAN Destination (This is displayed only when the optional upgrade kit UK-212 is installed)

1. Touch the [Wireless LAN Destination].
2. Select the applicable marketing area using [+] and [-] keys, and touch [decision].
3. Turn OFF and ON the main power switch.

Fax Target

1. Touch the [Fax Target].
2. Select the applicable marketing area using [+] and [-] keys, and touch [END].

#### (3) Setting item

Marketing Area

- Japan
- US
- Europe
- Others1 to 5

Wireless LAN Destination

- OT, US, CA, JP, AU, NZ, EU, DE, GB, FR, CH, NL, BE, AT, NO, SE, FI, IE, DK, IT, ES, PT, PL, ZA, TW, SA, CN, MY, SG, KR, HK, AR, BR, VN, PH, RU

Fax Target

- JP, AU, NZ, EU, DE, GB, FR, CH, NL, BE, AT, NO, SE, FI, IE, DK, IT, ES, PT, PL, ZA, TW, SA, CN, MY, SG, KR, HK, AR, BR, VN, PH, RU, OT, US, CA

##### (a) List of functions affected by marketing area setting

- The listed are the functions of which setting is automatically changed depending on the selected marketing area.

| Marketing area / Setting item | Japan | US | Europe | Others1 | Others2 | Others3 | Others4 | Others5 |
|---|---|---|---|---|---|---|---|---|
| Language (Default value) | Japanese | English | English | English | English | Simplified Chinese | Traditional Chinese | English |
| Language Selection (Selectable language) | Japanese<br>English<br>French<br>Italian<br>German<br>Spanish<br>Simplified Chinese<br>Traditional Chinese<br>Hangul | English<br>French<br>Italian<br>German<br>Spanish<br>Japanese<br>Simplified Chinese<br>Traditional Chinese<br>Hangul | English<br>French<br>Italian<br>German<br>Spanish<br>Japanese<br>Simplified Chinese<br>Traditional Chinese<br>Hangul | English<br>French<br>Italian<br>German<br>Spanish<br>Japanese<br>Simplified Chinese<br>Traditional Chinese<br>Hangul | English<br>French<br>Italian<br>German<br>Spanish<br>Japanese<br>Simplified Chinese<br>Traditional Chinese<br>Hangul | Simplified Chinese<br>English<br>French<br>Italian<br>German<br>Spanish<br>Japanese<br>Traditional Chinese<br>Hangul | Traditional Chinese<br>English<br>French<br>Italian<br>German<br>Spanish<br>Japanese<br>Simplified Chinese<br>Hangul | English<br>French<br>Italian<br>German<br>Spanish<br>Japanese<br>Simplified Chinese<br>Traditional Chinese<br>Hangul |
| Foolscap size | 8 x 13 | 8 x 13 | 8 x 13 | 8 x 13 | 8 x 13 | 8 x 13 | 8 x 13 | 8 x 13 |
| LCT(Built-in) size | A4 LEF | Letter LEF | A4 LEF | A4 LEF | A4 LEF | A4 LEF | A4 LEF | A4 LEF |

| Setting item \ Marketing area | | Japan | US | Europe | Others1 | Others2 | Others3 | Others4 | Others5 |
|---|---|---|---|---|---|---|---|---|---|
| Unit | | Metric | Inch | Metric | Metric | Metric | Metric | Metric | Metric |
| Registered Key Settings (default) | Registered Key 1 | User Box | Scan/Fax | Scan/Fax | Scan/Fax | Scan/Fax | Scan/Fax | Scan/Fax | Scan/Fax |
| | Registered Key 2 | Scan/Fax | Copy | Copy | Copy | Copy | Copy | Copy | Copy |
| | Registered Key 3 | Copy | 10 keypad | 10 keypad | 10 keypad | 10 keypad | 10 keypad | 10 keypad | 10 keypad |
| Total counter mode | | Mode1 | Mode2 | Mode2 | Mode2 | Mode2 | Mode2 | Mode2 | Mode2 |
| Size counter | | No count | A3, 11x17 | A3, B4, 11x17, 8 1/2x14 | A3, B4, 11x17, 8 1/2x14 | A3, B4, 11x17, 8 1/2x14 | A3, B4, 11x17, 8 1/2x14 | A3, B4, 11x17, 8 1/2x14 | A3, B4, 11x17, 8 1/2x14 |
| Unit Change | | Japan | US | Europe | Europe | Europe | Europe | Europe | Europe |

**NOTE**

- **The language used in the service mode depends on the Language Selection setting, and changes to the language as following table.**

| Language Selection | Service Mode |
|---|---|
| **Japanese** | **Japanese** |
| **Simplified Chinese** | **Simplified Chinese** |
| **Traditional Chinese** | **Traditional Chinese** |
| **Hangul** | **Hangul** |
| **Language other than listed above** | **English** |

### 5.15.2 Tel/Fax Number

#### (1) Use

- To enter the tel/fax number of the service contact that will appear on the control panel when a malfunction occurs in the machine.
- Upon setup.

#### (2) Procedure

- Enter the tel/fax number from the 10-key pad. (19 digits)
- Use Interrupt key to enter "-."

### 5.15.3 Serial Number

#### (1) Use

- To register the serial numbers of the machine and options.
- To display the serial number of the PH unit.
- The numbers will be printed on the list output.
- To use the serial number as device ID during CS Remote Care communication.
- Upon setup.

**NOTE**

- **When main power switch was turned ON while the serial No. was not entered, the message to require entering the serial No. will be displayed.**
- **Do not change the serial number registered in the machine. If memory data is lost and entering the serial number is required, enter the original correct serial number.**
  **Be careful to enter the correct serial number since characters other than alphanumeric can be also entered. CSRC communication is not available if a wrong serial number is entered.**
- **The serial number of "Printer" can be checked through the following: Menu -> [Counter].**

#### (2) Procedure

- Type the serial numbers.
  Printer, Scanner, ADF, LCT, Output Option, Duplex, Vendor, RU, ZU, Fax1, Fax2, Fax3, Fax4,

**NOTE**

- **The serial number of a PH unit can only be displayed but not be changed.**

### 5.15.4 Sleep ON/OFF Choice Setting

#### (1) Use

- To display the option of "No" for the sleep mode setting screen available from [Administrator Settings] -> [System Settings] -> [Power Supply/Power Save Settings].
- The sleep mode will begin in 48 hours even if it sets it to "OFF."

#### (2) Default setting

- Prohibit

#### (3) Setting item

- Permit

- Prohibit

### 5.15.5 Foolscap Size Setting

#### (1) Use

- To set the size for foolscap paper.
- Upon setup.

#### (2) Procedure

- Select the size from among the following six.

#### (3) Default setting

- 8 x 13

#### (4) Functions

- $8^1/_2$ x $13^1/_2$
- 220 x 330 mm
- $8^1/_2$ x 13
- $8^1/_4$ x 13
- $8^1/_8$ x $13^1/_4$
- 8 x 13

**NOTE**

- **"$8^1/_8$ x $13^1/_4$" and "220 x 330 mm" setting are corresponding to paper fed from the manual bypass tray only.**

### 5.15.6 Original Size Detection

#### (1) Copy Glass

##### (a) Use

- To change the size detection table for the document glass.

##### (b) Default setting

- Table1

##### (c) Setting item

- Table1
- Table2

**NOTE**

- **Table 2 can be set only when original size sensor 2 is being mounted.**

#### (2) $8^1/_2$ x 14/Foolscap Size Detection

##### (a) Use

- To set whether paper of $8^1/_2$ x $13^1/_2$ size is detected as $8^1/_2$ x 14 or foolscap in original glass or DF size detection.

  When Table 1 is selected in Copy Glass, paper of 81/2 x 131/2 size is detected as Foolscap despite of the setting of $8^1/_2$ x 14/Foolscap Size Detection.
- Not available for Japan models.

##### (b) Default setting

- $8\ ^1/_2$x14

##### (c) Functions

- $8\ ^1/_2$x14
- Foolscap

#### (3) ADF Size Detection

##### (a) Use

- To set whether or not to give a priority to the detection of 8K/16K size when DF is used.
- Not available for Japan models.

##### (b) Default setting

- K Size

##### (c) Functions

- K Size
- B series

### 5.15.7 Install Date

#### (1) Use

- To register the date the main body was installed.
- Upon setup.

**NOTE**

- **When using without setting the install date, the date/month/year at which the total counter reaches more than 100 sheets of paper will be set as an install date automatically.**

#### (2) Procedure

1. Call the Service Mode to the screen.
2. Touch [System 1] -> [Install Date].
3. Touch Clear.
4. Enter the date from the 10-key pad. (Year 4 digit -> Month 2 digit -> date 2 digit)
5. Touch [Entry] to set the date of installation.

### 5.15.8 Initialization-Clear All Data

#### (1) Use

- To initialize the setting data.
- For details on items to be cleared, see "I.10. CONTENTS TO BE CLEARED BY RESET FUNCTION."

**NOTE**

- **When removing or installing the hard disk after registering the data below, be sure to clear the data.**
  **Referring data: One-touch registration, user authentication/account track.**

#### (2) Procedure

1. Call the Service Mode to the screen.
2. Touch [System 1] -> [Initialization] -> [Clear All Data].
3. Press the Start key.
4. When [OK] is displayed, turn off the main power switch and turn it on again more than 10 seconds after.
   **NOTE**
   - **The trouble code "CD272: i-Option activated and additional memory and HDD not installed" is displayed after turned on the main power switch.**
5. Call the Service Mode to the screen.
6. Touch [System 2] -> [HDD] -> [Installed].
7. Exit the Service Mode and then turn off the main power switch and turn it on again more than 10 seconds after.

### 5.15.9 Initialization-Clear Individual Data

- Clear Individual Data enables you to select and clear multiple items at a time.

#### (1) Copy Program Data

##### (a) Use

- To clear data registered as copy program.
- Use this feature to clear all copy program data at a time.

##### (b) Procedure

1. Call the Service Mode to the screen.
2. Touch [System 1] -> [Initialization] -> [Copy Program Data].
3. Press the Start key.
4. When [OK] is displayed, turn off the main power switch and turn it on again more than 10 seconds after.

#### (2) Address Registration Data

##### (a) Use

- To clear address registration data.
- Use this feature to initialize address registration data.
- The following are address registration data:
  Group address data, Program key data, One-touch destination data, Mail body data, Subject data, Prefix/suffix data

##### (b) Procedure

1. Call the Service Mode to the screen.
2. Touch [System 1] -> [Initialization] -> [Address Registration Data].
3. Press the Start key.
4. When [OK] is displayed, turn off the main power switch and turn it on again more than 10 seconds after.

#### (3) Fax Setting Data

##### (a) Use

- To clear fax-related settings and parameters.
  However, address-related data is not cleared.
- Use this feature to clear fax-related settings and parameters at a time.

#### (b) Procedure

1. Call the Service Mode to the screen.
2. Touch [System 1] -> [Initialization] -> [Fax Setting Data].
3. Press the Start key.
4. When [OK] is displayed, turn off the main power switch and turn it on again more than 10 seconds after.

### (4) All History Data

#### (a) Use

- To clear history data.
- The following are history data:
  Job history, Journal history, Receive reject history, Destination history, Job secure counter (Internal data for history management)

#### (b) Procedure

1. Call the Service Mode to the screen.
2. Touch [System 1] -> [Initialization] -> [All History Data].
3. Press the Start key.
4. When [OK] is displayed, turn off the main power switch and turn it on again more than 10 seconds after.

### (5) Network Setting Data

#### (a) Use

- To clear the network-related settings.
- Use this feature to initialize and set network-related settings again when the machine does not work properly upon change of network-related settings.

#### (b) Procedure

1. Call the Service Mode to the screen.
2. Touch [System 1] -> [Initialization] -> [Network Setting Data].
3. Press the Start key.
4. When [OK] is displayed, turn off the main power switch and turn it on again more than 10 seconds after.

### (6) Server Cache Data

#### (a) Use

- To clear user information cached from the external authentication server.
- When [Administrator Settings] -> [User Authentication/Account Track] -> [External Server Settings] -> [Temporarily Save Authentication Info.] is set to "Enable," the corresponding user information is cached each time when authentication by the external server is successful. The information is used when MFP cannot be connected to the external server.

#### (b) Procedure

1. Call the Service Mode to the screen.
2. Touch [System 1] -> [Initialization] -> [Server Cache Data].
3. Press the Start key.
4. When [OK] is displayed, turn off the main power switch and turn it on again more than 10 seconds after.

## 5.15.10 Initialization-System Error Clear

### (1) Use

- To reset the trouble data.
- Use to clear the [Jam], [Trouble], [Error] displays, and other improper displays.
- For details on items to be cleared, see “I.10. CONTENTS TO BE CLEARED BY RESET FUNCTION.”

### (2) Procedure

1. Call the Service Mode to the screen.
2. Touch [System 1] -> [Initialization] -> [System Error Clear].
3. Press the Start key.
4. When [OK] is displayed, turn off the main power switch and turn it on again more than 10 seconds after.

## 5.15.11 Problem Unit Isolation Set.

### (1) Use

- Individual units and options have a set or unset setting for the problem unit isolation set. function.
- When a problem occurs, this function enables the continuous use of the units that are not affected by separately controlling them and isolating other units that have a problem.
- The machine isolates only units that have a “set” setting.
  **NOTE**
  - **The malfunction detection mechanism is not applied to units and options that are being isolated.**

- This function can be selected for the following units and options.
  Tray 1, Tray 2, Tray 3, Tray 4, LCT, manual, Half-Fold/Tri-Fold Center Stapling, Punch, Staple, Scanner, ADF, Expansion Function (HDD)
- Though Problem Unit Isolation Set. is not selected, if the specified malfunctions occur on the above listed units or options, an alert screen appears and asks users whether to isolate the units or options where malfunction occurs.
  See the “K.3.4 List of the trouble code” section for the corresponding trouble codes.

### (2) Default setting

- Unset

### (3) Setting item

- Set
- Unset

**NOTE**

- **After changing the setting, touch [Apply] and turn the main power switch OFF and ON to make the new setting effective.**

## 5.15.12 Post card transfer table

### (1) Use

- For the use of thick 3 postcards, you can select the transfer table suitable for postcards.
- This setting is used to improve transfer performance to postcards.

| | |
|---|---|
| Post. | The postcard 2nd image transfer table is used when printing on thick3 postcards. |
| Thick 3 | The normal thick3 2nd image transfer table is used when printing on thick 3 postcards. |

### (2) Default setting

- Post.

### (3) Setting item

- Post.
- Thick 3

## 5.15.13 Warm-up

### (1) Use

- To change warm up completion time.
- Mode is changed to Mode 2 in case the paper gets curled significantly when black printing is conducted immediately after warm up at Mode 1.
- Mode is changed to Mode 3 or 4 in case the paper gets curled immediately after normal warm up or the curled paper causes paper jam, paper exit failure, punch/staple/fold position failure or etc.

### (2) Default setting

- Mode 1

### (3) Setting item

- Mode 1
- Mode 2
- Mode 3
- Mode 4

| | |
|---|---|
| Mode 1 | It makes the warm-up time for black print shortest. |
| Mode 2 | The warm-up time for both black and color will be as specified value. |
| Mode 3 | To prevent curling of the paper immediately after the warm-up, printing productivity is decreased by PPM control.<br>The warm-up time will be as specified for both black and color. |
| Mode 4 | By having a longer warm-up time and warming up the fusing unit, curling of the paper immediately after the warm-up can be prevented.<br>The warm-up period of time will be 65 seconds or under. |

### (4) Fusing operation mode

- Warm-up related control can be changed by using [Warm Up] setting and [Choice of high humidity circumstance] setting.
  When the main power switch is turned on, the mode is defined according to each choice setting.
- The following table shows the features of each operation mode.

| Operation mode | Service Mode | | Target user | Advantages | Disadvantages |
|---|---|---|---|---|---|
| | Warm-up | Choice of high humidity circumstance | | | |
| 1 (Initial setting) | Mode 1 | OFF | • Black usage rate is high<br>• Want to print quickly | Makes warm-up time for black shortest | Curling may occur in high humidity |
| 2 | | ON | • Black usage rate is high<br>• Want to prevent curling | • Warm-up time for black is made shortest except when in high humidity<br>• Decreases possibility curling occurs in high humidity | Warm-up time is long in high humidity (60 seconds or later) |

| | | | | | |
|---|---|---|---|---|---|
| 3 | Mode 2 | OFF | • Want to print quickly<br>• Color usage rate is high | • Warm-up time is as specified value or later<br>• High productivity even in high humidity | Curling may occur in high humidity |
| 4 | | ON | • Color usage rate is high<br>• Want to prevent curling | • Warm-up time is as specified value or later except in high humidity<br>• Decreases possibility curling occurs in high humidity | Warm-up time is long in high humidity (60 seconds or later) |
| 5 | Mode 3 | OFF | • Want to print quickly<br>• Want to prevent curling immediately after warm-up | • Warm-up time is as specified value or later<br>• Decreases the curling in normal circumstance | • Productivity immediately after warm-up decreases<br>• Curling may occur in high humidity |
| 6 | | ON | • Want to prevent curling immediately after warm-up<br>• Want to print quickly<br>• Want to prevent curling when humidity is high | • Warm-up time is as specified value or later<br>• Decreases possibility curling occurs | • Productivity immediately after warm-up decreases<br>• Warm-up time is long in high humidity (60 seconds or later) |
| 7 | Mode 4 | OFF<br>ON | Want to prevent curling immediately after warm-up | Decreases possibility curling occurs | Long warm-up time (60 sec. or less) |

### 5.15.14 Machine State LED Setting

#### (1) Use

• To set how to display main body statuses on the machine state LED (state display lamp, paper empty lamp).

**NOTE**

• **Each of Type1 and Type2 has the following LED display forms.**

| Machine State LED Setting | | Type1 | Type2 |
|---|---|---|---|
| Warning Status | Attention<br>• Toner supply door open<br>• Toner cartridge install failure<br>• Toner Empty | Blinking | Blinking |
| | • Near life<br>• Toner Near Empty | Blinking | Unlit |
| | Malfunction code | Unlit | Unlit |
| | Problem Unit Isolation | Blinking | Blinking |
| | Fatal error<br>• Trouble code<br>• Jam<br>• Door opened<br>• Life stop<br>• Toner Empty Stop | Lit | Lit |
| Paper Remainder (Tray 1/2 paper empty lamp) | 100 % to near empty | Unlit | Unlit |
| | Near empty | Blinking | Unlit |
| | Empty | Lit | Lit |
| | Being lifted up<br>Cassette Open | Unlit | Unlit |
| Paper Remainder (Tray 3/4 paper empty lamp) | 100 % to near empty | Unlit | Unlit |
| | Near empty | Blinking | Unlit |
| | Empty | Lit | Lit |
| | Being lifted up<br>Cassette Open | Unlit | Unlit |

#### (2) Default setting

• Type 2

#### (3) Setting item

• Type 1
• Type2

### 5.15.15 TP Level

#### (1) Use

• To adjust the selectivity of the touch panel.

#### (2) Default setting

• 0

### (3) Setting range

- -2 to +2 (step: 1*)
- To increase sensitivity of the touch panel, increase the setting value.
- To decrease sensitivity of the touch panel, decrease the setting value.

**NOTE**

- **When the setting has been changed, turn off the main power switch and turn it on again more than 10 seconds after.**

## 5.15.16 Burn Prevention Settings

### (1) Use

- To prompt to prevent a burn injury by displaying a message indicating that the fusing unit is at a high temperature when the right door has to be opened in order to get rid of a paper jam.

### (2) Default setting

- Enable

### (3) Setting item

- Enable
- Disable

## 5.16 System 2

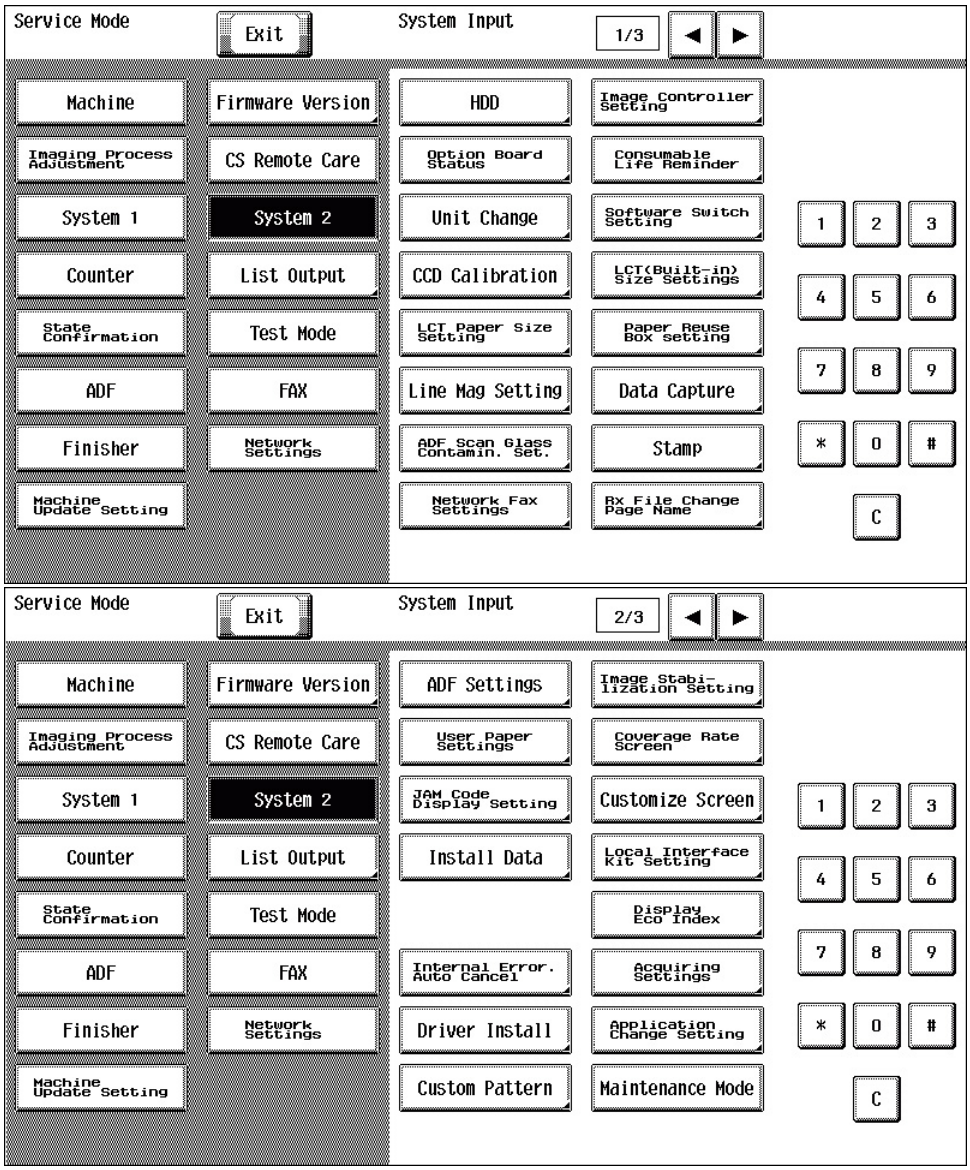

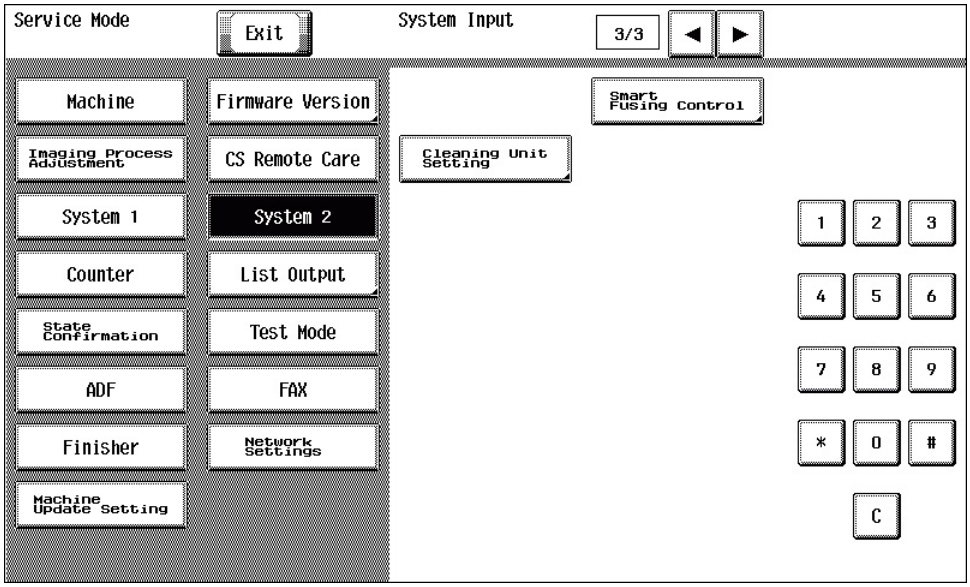


### 5.16.1 HDD

- Setting change is unnecessary. (Select [Installed] at any time.)

**NOTE**

- **For putting the following order [System 1] -> [initialization] into practice, the set becomes [Not Installed], causing an error. Required to set [Installed] again.**

### 5.16.2 Image Controller Setting

#### (1) Image Controller Setting

##### (a) Use

- To set the type of the controller.
- When setting up the controller.

##### (b) Procedure

- Select the controller to be used.

##### (c) Default setting

- Controller 0

##### (d) Functions

- Controller 0: The standard controller is used.
- Controller 1: The optional image controller IC-416 is used.
- Others: undefined.

* [Peripheral Mode] appears when [Others] is selected.

**NOTE**

- **When [Administrator Settings] -> [Security Settings] -> [Enhanced Security Mode] is "ON", this setting should be set to "Controller 0".**
  **When [Enhanced Security Mode] is set to "ON", this setting cannot be changed.**
- **After changing setting, make sure to turn off the main power switch and turn it on again more than 10 seconds after.**

##### (e) Note on returning the setting from "Controller 1" to "Controller 0".

- Selecting "Controller 0" will initialize the following settings made while "Controller 1" was selected. Reset the following items as necessary when using the internal standard controller.

<Control panel on the machine>

- Setting items included in [Network Setting] available from [Administrator Setting].
  (Except [Status Notification Setting] and [Prefix/Suffix Setting] available from the following setting. [Administrator Settings] -> [Network Settings] -> [Detail Settings].)
- [Administrator Settings] -> [User Authentication /Account Track] -> [General Settings] -> [User Authentication] -> [External Server Authentication]
- [Administrator Settings] -> [System Connection] -> [OpenAPI Settings]
- Mailbox Destination (scan)
- Information on the original specified by the program destination

<Page Scope Web Connection>

- SSL/TLS

#### (2) Peripheral Mode

##### (a) Procedure

- Select the operating mode of the Scanner.

**NOTE**
- **After changing setting, make sure to turn off the main power switch and turn it on again more than 10 seconds after.**

#### (b) Functions
- Mode 1: undefined.
- Mode 2: undefined.
- Mode 3: undefined.

### 5.16.3 Option Board Status
#### (1) Use
- To be used for setup of the optional fax kit (FK-514*1, FK-515*2) or the security kit (SC-508).
  **NOTE**
  - ***1: FK-514 is used for FAX line 1/line 2.**
  - ***2: FK-515 is used for FAX line 3/line 4. The Fax Mount kit (MK-742) is required when line 3/4 is installed.**

#### (2) Default setting
- Unset

#### (3) Setting item
FAX (circuit 1)
- Set
- Unset

FAX (circuit 2)
- Set
- Unset

FAX (circuit 3)
- Set
- Unset

FAX (circuit 4)
- Set
- Unset

DSC1
- Set
- Unset

DSC2
- Set
- Unset

**NOTE**
- **When the setting has been changed, turn off the main power switch and turn it on again more than 10 seconds after.**

### 5.16.4 Consumable Life Reminder
#### (1) Use
- To select whether or not to give the display of PM parts lifetime

| | |
|---|---|
| PM parts lifetime display | An entire screen warning is given when the service life of a specific unit has been reached, prompting the user to replace the part. |

- Applicable units:
  Transfer belt unit, fusing unit, developing unit, drum unit, transfer roller unit
- Use to select not to give the display of PM parts lifetime.

| | |
|---|---|
| Yes | When the service life has been reached, a malfunction code and an entire screen warning appear on the control panel. |
| No | When the service life has been reached, a malfunction code and a message appear in one line on the upper side of the screen. |

#### (2) Default setting
- No

#### (3) Setting item
- Yes
- No

### 5.16.5 Unit Change
#### (1) Unit Change
##### (a) Use
- To select who is to replace a unit.
- When the unit life arrives, the warning display is intended for the specific person who is going to replace the unit.
  - When "User" is selected: Printing is inhibited.
  - When "Service" is selected: Life warning.
- Upon setup.

**(b) Default setting**

| Units | Japan | US | Europe |
|---|---|---|---|
| Toner cartridge | User | User | User |
| Drum unit | Service | User | User |
| Waste toner box | Service | User | User |
| Hole-Punch Scrape Box | User | User | User |

**(c) Setting item**

- User
- Service

### (2) Warning display - Toner Near Empty

**(a) Use**

- To set whether to display a toner near empty warning.
- To be used for setup.

**(b) Default setting**

- Yes

**(c) Setting item**

- Yes
- No

### (3) Warning display - Near Empty Display Time

**NOTE**

- **The Near Empty Display time will be displayed when "Bit Assignment 00000010 / HEX Assignment 02" is set for the Switch No. "151" through the following settings. [SERVICE MODE] -> [System 2] -> [Software Switch Setting].**
- **A mechanism for detecting the residual toner inside the toner bottle is not provided to the toner cartridge. So note that when the toner cartridge is replaced in the midway, the display timing that was set as a reference and the amount of the residual toner inside the toner bottle may get mismatched.**

**(a) Use**

- To change the timing of toner cartridge near empty detection in order to optimize the timing of the toner cartridge replacement depending on individual use (PV).
- To configure the setting for both toner cartridge/K and toner cartridge/C,M,Y.
- To specify the timing for displaying toner near empty warning at a percentage against 100% of a full toner cartridge state.

**(b) Default setting**

- CMY: 0
- K: 7

**(c) Setting range**

- 0 to +25 (steps: 1)

### (4) Warning display - DU PreNear Life Display Time

**(a) Use**

- Specifies when to display the near life for the drum unit.
- Specifies whether to display the archive at a set number of months before the estimated the consumables check list life cycle is reached.
- When [0] is specified, the near life is not displayed.

**(b) Default setting**

- 0

**(c) Setting range**

- 0 to +6 (steps: 1)

### (5) Warning display – Near Life Display Settings

**(a) Use**

- To set whether or not to display the life warning of individual consumables.
- When [Do Not Display] is selected, a warning is not displayed at the time of life detection.
  However, in CS Remote Care, life warning is always sent to the Center regardless of this setting.
- Applicable consumables are as follows:
  Drum Unit, Developing Unit, Fusing Unit, Transfer Roller Unit, Image Transfer Belt Unit

#### (b) Default setting

- Display

#### (c) Setting item

- Display
- Do Not Display

### (6) Warning display – Pre-Near Life Display Setting

#### (a) Use

- To set whether or not to display the near life warning of drum unit.
- When [Do Not Display] is selected, a warning is not displayed at the time of near life detection. However, in CS Remote Care, near life warning is always sent to the Center regardless of this setting.

**NOTE**

- **When the PreNear Life Display setting is specified to [Off], the near life warning display is disabled.**

#### (b) Default setting

- ON

#### (c) Setting item

- ON
- OFF

## 5.16.6 Software Switch Setting

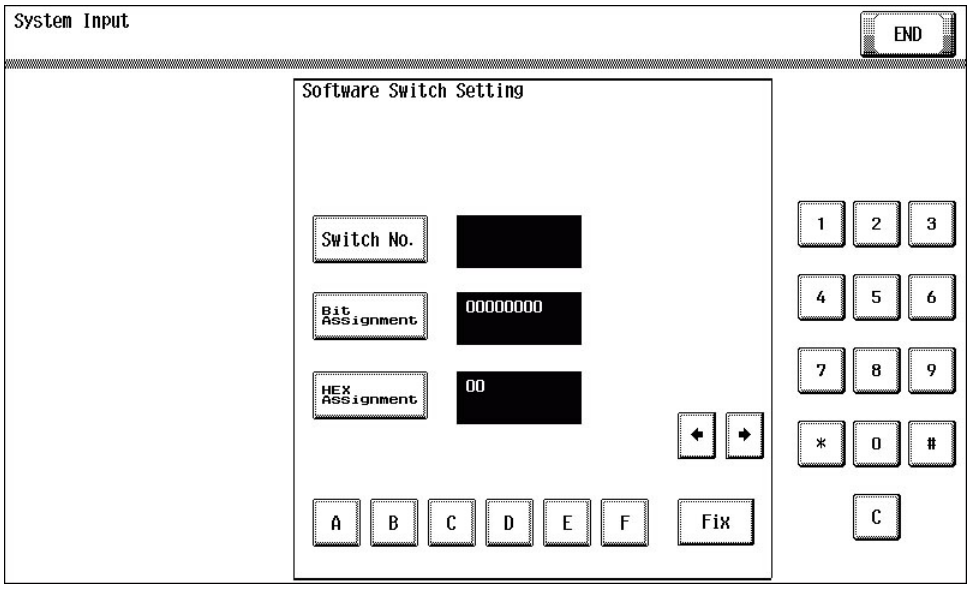


### (1) Use

- To set the operating characteristic of each function from software switch depending on what types of printing are normally made.

### (2) Procedure

1. Call the Service Mode to the screen.
2. Touch [System 2] > [Software Switch Setting].
3. Touch [Switch No.] and enter the intended switch number with the 10-key pad.
4. Touch [Bit Assignment].
5. Use [<-] or [->] to select a bit. To set the bit, enter 0 or 1 with the 10-key pad.
6. To set the bit in hex, touch [HEX Assignment] and use the 10-key pad and [A] to [F] keys to enter numbers and characters.
7. Touch [Fix].

### (3) Details of the software switch settings

**NOTE**

- **For switches not mentioned in the list below, use them in the default value (Bit Assignment: 00000000 / HEX Assignment: 00) unless indicated otherwise.**

| Switch No. | Function | Setting value | | | Default value (Bit/HEX) | Reference |
|---|---|---|---|---|---|---|
| | | Bit Assignment | HEX Assignment | Details | | |
| 012 | Addition of the authentication device | 00000000 | 00 | Standard | 00000000 / 00 | • I.8.3.7 Authentication Device 2 |
| | | 00000010 | 02 | [Card3] choice is added in Service Mode. | | |

| Switch No. | Function | Setting value | | | Default value (Bit/HEX) | Reference |
|---|---|---|---|---|---|---|
| | | Bit Assignment | HEX Assignment | Details | | |
| 025 | FW function version setting | 00010000 | 10 | FW compatible with version 2 | 00010000 / 10 | • I.2.9 Device Information List |
| 033 | Renders some functions, which were available when both administrator authentication and key counter were provided with when using the vendor, available only with administer authentication. | 00000000 | 00 | Available with the combination of administer authentication and key counter. | 00000000 / 00 | • I.2.3.1.(1).(g) Expert Adjustment<br>• I.2.3.1.(1).(h) List/ Counter |
| | | 00000001 | 01 | Available only with administrator authentication. | | |
| 049 | The upper limit of copies that can be input through the control panel of this machine is set. | 00000000 | 00 | Unlimited | 00000000 / 00 | - |
| | | 00000001 | 01 | 1 copy | | |
| | | 00000010 | 02 | 3 copies | | |
| | | 00000011 | 03 | 5 copies | | |
| | | 00000100 | 04 | 9 copies | | |
| | | 00000101 | 05 | 10 copies | | |
| | | 00000110 | 06 | 20 copies | | |
| | | 00000111 | 07 | 30 copies | | |
| | | 00001000 | 08 | 50 copies | | |
| | | 00001001 | 09 | 99 copies | | |
| | | 00001010 | 0A | 250 copies | | |
| | Scan setting only when Sort is selected for a copy cycle to be run with originals placed on the original glass. | 00000000 | 00 | "Change Setting" and "Finish" keys become available after the document has been scanned. | 00000000 / 00 | - |
| | | 10000000 | 80 | Keys unavailable (copy cycle is started) | | |
| 051 | Settings for the life warning/ replace display of the units | 00000000 | 00 | Normal display | 00000000 / 00 | • O.5.3.9 Developing unit life detection<br>• O.4.3.7 Drum unit life detection<br>• O.7.3.10 Transfer belt life detection<br>• O.14.3.12 Fusing unit life detection<br>• I.5.17.2.(3) New Release |
| | | 00010000 | 10 | Does not show the life warning/replace display of the drum unit. | | |
| | | 00100000 | 20 | Does not show the life warning/replace display of the developing unit. | | |
| | | 01000000 | 40 | Does not show the life warning/replace display of the transfer belt unit. | | |
| | | 10000000 | 80 | Does not show the life warning/replace display of the fusing unit. | | |
| 059 | Display setting of [Engine FW Dip SW] on the Enhanced Security menu. | 00000000 | 00 | Not displayed. | 00000000 / 00 | • I.7.3.9 Engine FW DipSW |
| | | 00000001 | 01 | Displayed | | |
| 063 | Display setting of [Image Log Transfer Settings] on the control panel. | 00000000 | 00 | Not displayed. | 00000000 / 00 | • I.8.3.8 Setting items that automatically change the setting values<br>• I.2.11.16 Security Settings - Image Log Transfer Settings (Type1)<br>• I.2.11.17 Security Settings - Image Log Transfer Settings (Type2) |
| | | 00000001 | 01 | Displayed (Type 1) | | |
| | | 00000010 | 02 | Displayed (Type 2: Only applicable to fax communication) | | |
| | | 00000011 | 03 | Not used | | |
| 069 | When printing using the manual bypass tray in a custom size, allows for printing only with a printer driver settings. | 00000000 | 00 | After setting a paper in the manual bypass tray, touch [complete] key to start printing. | 00000000 / 00 | - |

| Switch No. | Function | Setting value | | | Default value (Bit/HEX) | Reference |
|---|---|---|---|---|---|---|
| | | Bit Assignment | HEX Assignment | Details | | |
| | | 00000001 | 01 | Start printing with the paper settings specified by the printer driver as the manual bypass tray paper settings without giving a warning. | | |
| 070 | Setting for alarm sound and screen display for communication errors occurring due to CSRC causes. | 00000000 | 00 | Communication error sound/screen display enabled. | 00000000 / 00 | - |
| | | 00010000 | 10 | Communication error sound/screen display disabled. | | |
| 072 | Import/export function of the address book through the USB memory | 00000000 | 00 | Import/export function is disabled. | 00000000 / 00 | • I.2.11.26 External Memory Backup - Import/Export |
| | | 00000100 | 04 | Import/export function is enabled. | | |
| 124 | Function to restrict the file type of TX Fax | 00000000 | 00 | Restrict the file type. | 00000000 / 00 | • I.2.3.8.(1).(e) Function Settings |
| | | 00000001 | 01 | Do not restrict the file type. | | |
| 135 | Setting for ID length of the HID Prox card | 00000000 | 00 | Reports that the 1st byte shows the ID length of the card, the 2nd byte and after shows the card ID. | 00000000 / 00 | - |
| | | 00000001 | 01 | Reports the card ID with the ID length including the 1st byte. | | |
| 143 | Expansion setting of the touch panel sensitive area when the web browser function is used *1 | 00000000 | 00 | • 26 dots : 26 dots from the perimeter of the touch panel is a nonsensitive area. | 00000000 / 00 | • C.14.2 Web browser function |
| | | 00000001 | 01 | • 16 dots : 16 dots from the perimeter of the touch panel is a nonsensitive area. | | |
| | | 00000010 | 02 | • 9 dots : 9 dots from the perimeter of the touch panel is a nonsensitive area. | | |
| 145 | Switching to Auto detection for paper size in manual bypass tray | 00000000 | 00 | Enable | 00000000 / 00 | - |
| | | 00000001 | 01 | Disable | | |
| | Switching paper feed mode if the size of paper fed from the manual bypass tray is mismatched | 00000000 | 00 | Stop immediately | 00000010 / 02 | - |
| | | 00000010 | 02 | Stop accordingly Stop immediately in the following cases as an exception. • "1" is set at bit4 for the Switch No.145 • For jobs where center stapling, half-folding, tri-folding and Z-folding are set with a finisher equipped | | |
| | Displaying message when the paper size in manual bypass tray is mismatched with the paper size specified on the control panel | 00000000 | 00 | Enable | 00000000 / 00 | - |
| | | 00000100 | 04 | Disable | | |
| | When running a copy cycle with originals placed on the original glass, and [Auto] is displayed in "Group/Sort" of | 00000000 | 00 | Enable | 00000000 / 00 | - |

| Switch No. | Function | Setting value | | | Default value (Bit/HEX) | Reference |
|---|---|---|---|---|---|---|
| | | Bit Assignment | HEX Assignment | Details | | |
| | the finishing function, [Auto] will be set as default. ("Sort" and "Offset" will be executed when [Auto] is selected.) | 00001000 | 08 | Disable | | |
| | Switch-over settings of Duplex printing and Billing permission<br>Setting for allowing/ prohibiting billing on exited paper when a paper size error occurred at the time of duplex printing | 00000000 | 00 | Allow (billing on one side of the paper) | 00000000 / 00 | - |
| | | 00010000 | 10 | Prohibit | | |
| 146 | Setting for enabling use of Non-Image Area Erase, Centering, and Original Size when the book original is used in the fax/scanner mode | 00000000 | 00 | Prohibits use of Non-Image Area Erase, Centering, and Original Size. | 00000000 / 00 | - |
| | | 00000100 | 04 | Enables use of Non-Image Area Erase, Centering, and Original Size. | | |
| 151 | Setting for displaying/hiding the Near Empty Display Time | 00000000 | 00 | Hide | 00000010 / 02 | • I.5.16.5.(3) Warning display - Near Empty Display Time |
| | | 00000010 | 02 | Display | | |
| 152 | The E-mail body print settings of E-Mail RX Print | 00000000 | 00 | Disables the E-mail body print settings | 00000000 / 00 | • This function supports the following languages. English, French, Italian, Germany, Spanish |
| | | 00000001 | 01 | Allows the E-mail body print settings. | | |
| 155 | Validation/invalidation of the debug setting of the log. | 00000000 | 00 | Debug setting is disabled. | 00000000 / 00 | • Debug Setting/I.9.2 Starting/Exiting<br>• Debug Setting/I. 9.4.1 Basic mode |
| | | 00000001 | 01 | Debug setting is enabled. | | |
| 156 | Line width setting of monochrome printing in the 1,200 dpi mode | 00000000 | 00 | Standard mode<br>: When printed in the 1,200 dpi mode, thin lines appear wider than they are in the 600 dpi mode. | 00000000 / 00 | - |
| | | 00000001 | 01 | Thin line mode*2<br>: When printed in the 1,200 dpi mode, thin lines appear in the same width as they are in the 600 dpi mode. (Note that the gradation reproducibility is lower than the 1,200 dpi standard mode) | | |
| 157 | Change the upper limit of the time for switching to power save mode. | 00000000 | 00 | Do not change the upper limit. | 00000000 / 00 | • I.2.3.1.(1).(a) Power Supply/Power Save Settings |
| | | 00000010 | 02 | Change the upper limit to 240 min. | | |
| 192 | Set whether to enable the Android and iOS function | 00000000 | 00 | Disable | 00000001 / 01 | - |
| | | 00000001 | 01 | Enable | | |
| 203 | Setting to automatically change log-in authorization to a second user when the second user attempts card authentication after a first user has been authenticated through card authentication. | 00000000 | 00 | Log-in authorized. | 00000000 / 00 | - |
| | | 00000100 | 04 | Log-in not authorized. | | |
| 206 | Setting whether to enable Coverage Counter | 00000000 | 00 | Disable | 00000000 / 00 | • I.8.3.19 Coverage Counter Setting<br>• I.8.3.20 Print Counter Clear<br>• I.8.3.21 Coverage Counter Detail |
| | | 00000001 | 01 | Enable | | |

| Switch No. | Function | Setting value | | | Default value (Bit/HEX) | Reference |
|---|---|---|---|---|---|---|
| | | Bit Assignment | HEX Assignment | Details | | |
| 223 | Whether to permit panel customize setting by user administrator (North America only) | 00000000 | 00 | Disable | 00000000 / 00 | • I.2.11.5 Network Settings-IWS Settings<br>• I.2.3.1.(1).(i) Reset Settings<br>• I.2.3.9 System Connection |
| | | 00000001 | 01 | Enable | | |

- *1: The sensitive area of the control panel can be expanded by selecting “16 dots” or “9 dots” on the software switch No.143. Note that the control panel’s sensitive area expanded in this manner may not detect touches properly.
- *2: When selecting the “thin line mode” on the software switch No.156, ensure to run the Image Stabilizer manually. Without the Image Stabilizer in effect, the image will be printed with decreased density.
  Setting procedure
  1. Touch [Fix] after changing the software switch setting, and touch [END]. The software switch setting screen will be closed and the Service Mode screen will reappear.
  2. Touch [Exit]. The Service Mode screen will be closed and the basic screen will reappear.
  3. Turn OFF the main power switch and turn it ON again more than 10 seconds after.
  4. Go back into the Service Mode, and execute the Imaging Process Adjustment / Stabilizer (Initialize+Image Stabilization).
  5. After the Stabilizer has finished running, touch [END], and the Service Mode screen will reappear.
  6. Touch [Exit]. The Service Mode screen will be closed and the basic screen will reappear.
  7. Turn OFF the main power switch and turn it ON again more than 10 seconds after.

### (4) Software Switch Setting list

- The list of the setting values of Software Switch Setting can be print from [Service Mode] -> [List Output] -> [Machine Management List].

Sample

Machine Manage P 9
ment List 03/09/2012 09:30
Serial No.
TC: 0

DipSW Setting

| No. | Bit. | Hex | No. | Bit. | Hex | No. | Bit. | Hex | No. | Bit. | Hex | No. | Bit. | Hex |
|---|---|---|---|---|---|---|---|---|---|---|---|---|---|---|
| 000 | 00000000 | 00 | 064 | 00000000 | 00 | 128 | 00000000 | 00 | 192 | 00000000 | 00 | 256 | 00000000 | 00 |
| 001 | 00000000 | 00 | 065 | 00000000 | 00 | 129 | 00000000 | 00 | 193 | 00000000 | 00 | 257 | 00000000 | 00 |
| 002 | 00000000 | 00 | 066 | 00000000 | 00 | 130 | 00000000 | 00 | 194 | 00000000 | 00 | 258 | 00000000 | 00 |
| 003 | 00000000 | 00 | 067 | 00000000 | 00 | 131 | 00000000 | 00 | 195 | 00000000 | 00 | 259 | 00000000 | 00 |
| 004 | 00000000 | 00 | 068 | 00000000 | 00 | 132 | 00000000 | 00 | 196 | 00000000 | 00 | 260 | 00000000 | 00 |
| 005 | 00000000 | 00 | 069 | 00000000 | 00 | 133 | 00000000 | 00 | 197 | 00000000 | 00 | 261 | 00000000 | 00 |
| 006 | 00000000 | 00 | 070 | 00000000 | 00 | 134 | 00000000 | 00 | 198 | 00000000 | 00 | 262 | 00000000 | 00 |
| 007 | 00000000 | 00 | 071 | 00000000 | 00 | 135 | 00000000 | 00 | 199 | 00000000 | 00 | 263 | 00000000 | 00 |
| 008 | 00000000 | 00 | 072 | 00000000 | 00 | 136 | 00000000 | 00 | 200 | 00000000 | 00 | 264 | 00000000 | 00 |
| 009 | 00000000 | 00 | 073 | 00000000 | 00 | 137 | 00000000 | 00 | 201 | 00000000 | 00 | 265 | 00000000 | 00 |
| 010 | 00000010 | 02 | 074 | 00000000 | 00 | 138 | 00000000 | 00 | 202 | 00000000 | 00 | 266 | 00000000 | 00 |
| 011 | 00000000 | 00 | 075 | 00000000 | 00 | 139 | 00000000 | 00 | 203 | 00000000 | 00 | 267 | 00000000 | 00 |
| 012 | 00000000 | 00 | 076 | 00000000 | 00 | 140 | 00000000 | 00 | 204 | 00000000 | 00 | 268 | 00000000 | 00 |
| 013 | 00000000 | 00 | 077 | 00000000 | 00 | 141 | 00000000 | 00 | 205 | 00000000 | 00 | 269 | 00000000 | 00 |
| 014 | 00000000 | 00 | 078 | 00000000 | 00 | 142 | 00000000 | 00 | 206 | 00000000 | 00 | 270 | 00000000 | 00 |
| 015 | 00000000 | 00 | 079 | 00000000 | 00 | 143 | 00000000 | 00 | 207 | 00000000 | 00 | 271 | 00000000 | 00 |
| 016 | 00000000 | 00 | 080 | 00000000 | 00 | 144 | 00000000 | 00 | 208 | 00000000 | 00 | 272 | 00000000 | 00 |
| 017 | 00000000 | 00 | 081 | 00000000 | 00 | 145 | 00000000 | 00 | 209 | 00000000 | 00 | 273 | 00000000 | 00 |
| 018 | 00000000 | 00 | 082 | 00000000 | 00 | 146 | 00000000 | 00 | 210 | 00000000 | 00 | 274 | 00000000 | 00 |
| 019 | 00000000 | 00 | 083 | 00000000 | 00 | 147 | 00000000 | 00 | 211 | 00000000 | 00 | 275 | 00000000 | 00 |
| 020 | 00000000 | 00 | 084 | 00000000 | 00 | 148 | 00000000 | 00 | 212 | 00000000 | 00 | 276 | 00000000 | 00 |
| 021 | 00000000 | 00 | 085 | 00000000 | 00 | 149 | 00000000 | 00 | 213 | 00000000 | 00 | 277 | 00000000 | 00 |
| 022 | 00000000 | 00 | 086 | 00000000 | 00 | 150 | 00000000 | 00 | 214 | 00000000 | 00 | 278 | 00000000 | 00 |
| 023 | 00000000 | 00 | 087 | 00000000 | 00 | 151 | 00000000 | 00 | 215 | 00000000 | 00 | 279 | 00000000 | 00 |
| 024 | 00000000 | 00 | 088 | 00000000 | 00 | 152 | 00000000 | 00 | 216 | 00000000 | 00 | 280 | 00000000 | 00 |
| 025 | 00000000 | 00 | 089 | 00000000 | 00 | 153 | 00000000 | 00 | 217 | 00000000 | 00 | 281 | 00000000 | 00 |
| 026 | 00000000 | 00 | 090 | 00000000 | 00 | 154 | 00000000 | 00 | 218 | 00000000 | 00 | 282 | 00000000 | 00 |
| 027 | 00000000 | 00 | 091 | 00000000 | 00 | 155 | 00000001 | 01 | 219 | 00000000 | 00 | 283 | 00000000 | 00 |
| 028 | 00000000 | 00 | 092 | 00000000 | 00 | 156 | 00000000 | 00 | 220 | 00000000 | 00 | 284 | 00000000 | 00 |
| 029 | 00000000 | 00 | 093 | 00000000 | 00 | 157 | 00000000 | 00 | 221 | 00000000 | 00 | 285 | 00000000 | 00 |
| 030 | 00000000 | 00 | 094 | 00000000 | 00 | 158 | 00000000 | 00 | 222 | 00000000 | 00 | 286 | 00000000 | 00 |
| 031 | 00000000 | 00 | 095 | 00000000 | 00 | 159 | 00000000 | 00 | 223 | 00000000 | 00 | 287 | 00000000 | 00 |
| 032 | 00000000 | 00 | 096 | 00000000 | 00 | 160 | 00000000 | 00 | 224 | 00000000 | 00 | 288 | 00000000 | 00 |
| 033 | 00000000 | 00 | 097 | 00000000 | 00 | 161 | 00000000 | 00 | 225 | 00000000 | 00 | 289 | 00000000 | 00 |
| 034 | 00000000 | 00 | 098 | 00000000 | 00 | 162 | 00000000 | 00 | 226 | 00000000 | 00 | 290 | 00000000 | 00 |
| 035 | 00000000 | 00 | 099 | 00000000 | 00 | 163 | 00000000 | 00 | 227 | 00000000 | 00 | 291 | 00000000 | 00 |
| 036 | 00000000 | 00 | 100 | 00000000 | 00 | 164 | 00000000 | 00 | 228 | 00000000 | 00 | 292 | 00000000 | 00 |
| 037 | 00000000 | 00 | 101 | 00000000 | 00 | 165 | 00000000 | 00 | 229 | 00000000 | 00 | 293 | 00000000 | 00 |
| 038 | 00000000 | 00 | 102 | 00000000 | 00 | 166 | 00000000 | 00 | 230 | 00000000 | 00 | 294 | 00000000 | 00 |
| 039 | 00000000 | 00 | 103 | 00000000 | 00 | 167 | 00000000 | 00 | 231 | 00000000 | 00 | 295 | 00000000 | 00 |
| 040 | 00000001 | 01 | 104 | 00000000 | 00 | 168 | 00000000 | 00 | 232 | 00000000 | 00 | 296 | 00000000 | 00 |
| 041 | 00000000 | 00 | 105 | 00000000 | 00 | 169 | 00000000 | 00 | 233 | 00000000 | 00 | 297 | 00000000 | 00 |
| 042 | 00000000 | 00 | 106 | 00000000 | 00 | 170 | 00000000 | 00 | 234 | 00000000 | 00 | 298 | 00000000 | 00 |
| 043 | 00000011 | 03 | 107 | 00000000 | 00 | 171 | 00000000 | 00 | 235 | 00000000 | 00 | 299 | 00000000 | 00 |
| 044 | 00000000 | 00 | 108 | 00000000 | 00 | 172 | 00000000 | 00 | 236 | 00000000 | 00 | | | |
| 045 | 00000000 | 00 | 109 | 00000000 | 00 | 173 | 00000000 | 00 | 237 | 00000000 | 00 | | | |
| 046 | 00000000 | 00 | 110 | 00000000 | 00 | 174 | 00000000 | 00 | 238 | 00000000 | 00 | | | |
| 047 | 00000000 | 00 | 111 | 00000000 | 00 | 175 | 00000000 | 00 | 239 | 00000000 | 00 | | | |
| 048 | 00000000 | 00 | 112 | 00000000 | 00 | 176 | 00000000 | 00 | 240 | 00000000 | 00 | | | |
| 049 | 00000000 | 00 | 113 | 00000000 | 00 | 177 | 00000000 | 00 | 241 | 00000000 | 00 | | | |
| 050 | 00000000 | 00 | 114 | 00000000 | 00 | 178 | 00000000 | 00 | 242 | 00000000 | 00 | | | |
| 051 | 00000000 | 00 | 115 | 00000000 | 00 | 179 | 00000000 | 00 | 243 | 00000000 | 00 | | | |
| 052 | 00000000 | 00 | 116 | 00000000 | 00 | 180 | 00000000 | 00 | 244 | 00000000 | 00 | | | |
| 053 | 00000000 | 00 | 117 | 00000000 | 00 | 181 | 00000000 | 00 | 245 | 00000000 | 00 | | | |
| 054 | 00000000 | 00 | 118 | 00000000 | 00 | 182 | 00000000 | 00 | 246 | 00000000 | 00 | | | |
| 055 | 00000000 | 00 | 119 | 00000000 | 00 | 183 | 00000000 | 00 | 247 | 00000000 | 00 | | | |
| 056 | 00000000 | 00 | 120 | 00000000 | 00 | 184 | 00000000 | 00 | 248 | 00000000 | 00 | | | |
| 057 | 00000000 | 00 | 121 | 00000000 | 00 | 185 | 00000000 | 00 | 249 | 00000000 | 00 | | | |
| 058 | 00000000 | 00 | 122 | 00000000 | 00 | 186 | 00000000 | 00 | 250 | 00000000 | 00 | | | |
| 059 | 00000000 | 00 | 123 | 00000000 | 00 | 187 | 00000000 | 00 | 251 | 00000000 | 00 | | | |
| 060 | 00000000 | 00 | 124 | 00000000 | 00 | 188 | 00000000 | 00 | 252 | 00000000 | 00 | | | |
| 061 | 00000000 | 00 | 125 | 00000000 | 00 | 189 | 00000000 | 00 | 253 | 00000000 | 00 | | | |
| 062 | 00000000 | 00 | 126 | 00000000 | 00 | 190 | 00000000 | 00 | 254 | 00000000 | 00 | | | |
| 063 | 00000000 | 00 | 127 | 00000000 | 00 | 191 | 00000000 | 00 | 255 | 00000000 | 00 | | | |

### 5.16.7 CCD Calibration

#### (1) Use

- To set whether to use the calibration adjustment value set prior to the shipping. To display the current calibration adjustment value.
- When CCD board (front side)/CIS (back side: only when DF-704 is mounted) has been replaced, set to “OFF.”
  After replacing the CCD board or CIS, the default generic value needs to be set since the calibration value set for each unit changes to control the differences in reading performance on each scanner (CCD).
- The original calibration adjustment value can be disabled to address image failure and other problems caused by individual CCD performance difference.
- When DF-704 is mounted, this setting can be made separately for [Front Side] and [Back Side].

#### (2) Default setting

- ON

#### (3) Setting item

- ON
- OFF

**NOTE**

- **When the setting is changed, the function becomes available by turning the main power switch OFF and ON again.**

### 5.16.8 LCT (Built-in) Size Settings

#### (1) Use

- To set the paper size for the built-in LCT.
- To use when the optional paper feed cabinet PC-410 is mounted.

#### (2) Default setting

- A4 (Except for North America)
- $8\frac{1}{2}$ x 11 (North America)

#### (3) Setting item

- A4
- $8\frac{1}{2}$ x 11

### 5.16.9 LCT Paper Size Setting

**NOTE**

- **When the LCT type setting is changed, the paper size setting in the LCT is returned to the default.**

#### (1) A4LCT

##### (a) Use

- To set the paper size for the optional large capacity unit LU-302.
- Use this feature upon the optional large capacity unit LU-302 set-up.

##### (b) Default setting

- A4 (Except for North America)
- $8\frac{1}{2}$ x 11 (North America)

##### (c) Setting item

- A4
- $8\frac{1}{2}$ x 11

#### (2) A3LCT

- Not used

### 5.16.10 Paper Reuse Box Setting

- Not used

### 5.16.11 Line Mag Setting

#### (1) Use

- To set whether to use the offset value which has been set prior to the shipping. To display the current magnification offset value.
- When CCD board (front side)/CIS (back side: only when DF-704 is mounted) has been replaced, set to “OFF.”
  After replacing the CCD board or CIS, the default generic value needs to be set since the magnification offset value between the lines set for each unit changes to control the differences in reading performance on each scanner (CCD).
- The original offset value can be disabled to address image failure and other problems caused by individual CCD performance difference.
- When DF-704 is mounted, this setting can be made separately for [Front Side] and [Back Side].

#### (2) Default setting

- ON

#### (3) Setting item

- ON
- OFF

**NOTE**

- **When the setting is changed, the function becomes valid by turning the main power switch OFF and ON again.**

### 5.16.12 Data Capture

#### (1) Use

- When an error occurs, it acquires the print job data in order to analyze the cause of the error.
- When an error occurs, this will be used to analyze the cause of the error according to the print job data.

#### (2) Procedure

**NOTE**

**The following conditions are necessary for this function.**

- **When selecting [Security Setting] -> [Security Details] -> [Print Data Capture] in Administrator Settings, [Allow] must be set.**
- **The hard disk must be mounted to the machine.**
- **[ON] must be set when selecting [Administrator Settings] -> [Network Settings] -> [FTP Settings] -> [FTP Server Settings].**
- **This function is not available when the optional image controller IC-416 is mounted.**

- **This function also allows print job data stored in the HDD to be obtained from [Debug Settings] -> [Debug Log Output]. For more details, see "I.9.3.1 Debug Log Output".**

1. Select [Service Mode] -> [System 2], and touch [Data Capture]. Select [ON].
   (While the Data Capture setting is [ON], the print job data from the PC will be stored in the hard disk.)
   **NOTE**
   - **Maximum 5 print job data can be stored. The data will be overwritten beginning with the chronologically oldest one.**

2. Check the IP address of the machine.
3. Connect the PC (Windows) and the machine with ethernet cable.
4. Start the DOS command prompt of the PC, and specify the IP address of the machine to start FTP.

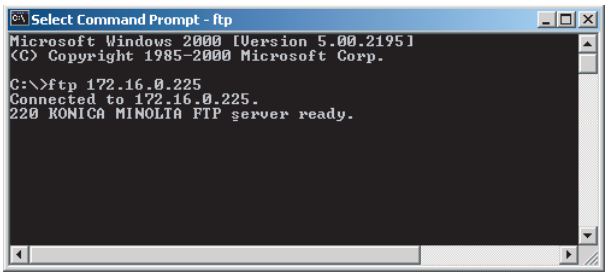


5. Input the user name and the password.
   - User name: capture
   - Password: sysadm

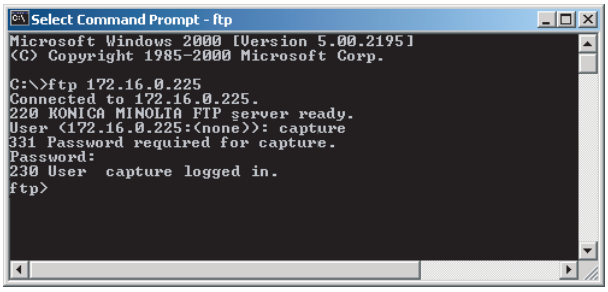


6. Using the "ls" command, display the list of the file available for capture.

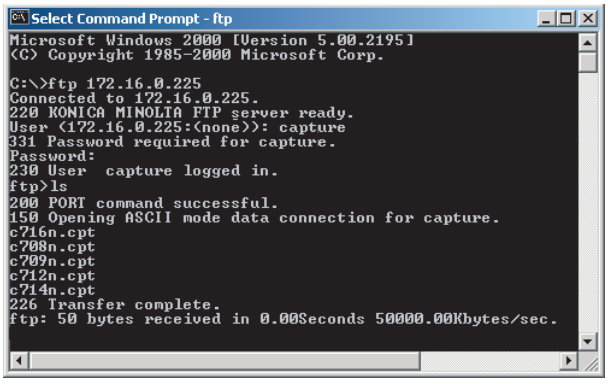


7. Using the "binary" command, set the File transfer mode to the binary transfer.

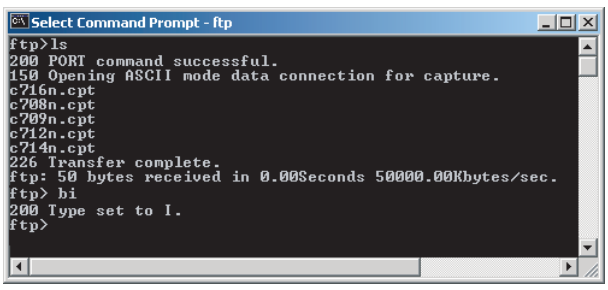


8. Using the "get" command, transfer the data for capture to PC.

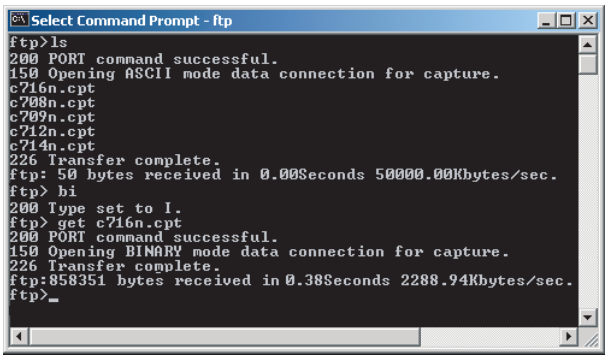


9. Finish the command prompt.

**NOTE**

- **After receiving capture data, select [Administrator Settings] -> [Security Settings] -> [Security Details] -> [Print Data Capture], and select [Restrict] for the print data capture setting in order to delete the job data stored in the hard disk. When HDD Format or Overwrite Temporary Data is performed, job data is deleted.**

### 5.16.13 Line Detection

#### (1) ADF Scan Glass Contamin. Sensitivity

- To make each settings for contamination detection.
- Make the settings separately for the front side and the back side.

##### (a) Use

- To set the detection level for the pre-detection of stain on the DF original glass (or the CIS glass).
  In the back side pre-detection, stains of not only the CIS glass but also the back side glass cleaning roller are detected.
- Use when changing the setting for whether or not to detect the stain on the DF original glass when opening/closing DF as well as its detection level as the main power switch being ON, recovering from the sleep/low power mode, etc.

| | |
|---|---|
| Not Set | Detection of stain on the glass will not be conducted. |
| Low | Stain on the glass will not be detected easily. |
| Normal | Normal detection level |
| High | Stain on the glass will easily be detected. |

**NOTE**

- **Be aware that selecting “Not Set” and performing the pre-detection with [Service Mode] -> [Machine] -> [ADF Scan Glass Contamination] will display “NG.”**
- **When “Not Set” is selected, the original glass cleaning operation after the job ends does not operate.**

##### (b) Default setting

- Normal

##### (c) Setting item

- Not Set
- Low
- Normal
- High

#### (2) ADF Scan Glass Contamin. Warn/Level

##### (a) Use

- To set how to display the warning when stain on the DF original glass (or the CIS glass) is detected.
- Use when changing the display of the warning which requests the cleaning of the stain on the glass detected by the pre-detection of the lines.

| | |
|---|---|
| 0 | Warning will not be displayed. |
| 1 | Warning will be displayed by the maintenance mark. (Malfunction code: D-1) |
| 2 | Warning will be displayed on the message area on the basic screen. |
| 3 | Warning will be displayed on all screens. |

**NOTE**

- **This setting is invalid when [ADF Scan Glass Contamin. Sensitivity] is set to “Not Set.”**

##### (b) Default setting

- 1

##### (c) Setting item

- 0

- 1
- 2
- 3

#### (3) Feed Cleaning Settings

##### (a) Use

- To set the operation for detection and cleaning operation of stain on the DF original glass when feeding the original.
- Use when changing the operation for detection and cleaning operation of stain on the DF original glass when feeding the original.

| | |
|---|---|
| 0 | The cleaning brush will stop moving when the original is fed, and will not perform cleaning the stain. |
| 1 | The cleaning brush will move between originals when feeding the original. |

##### (b) Default setting

- 1

##### (c) Setting item

- 0
- 1

#### (4) Display Timing (only when DF-704 is mounted)

##### (a) Use

- To set the timing at which a warning is displayed when contamination is detected on the surface of the CIS glass in a pre-detection process.

| | |
|---|---|
| Back Scan Time | Displays the warning only when back side scanning mode is selected. |
| Warning Detection | Displays the warning whenever contamination is detected. |

- This setting is enabled only when [Back Side] is selected.

##### (b) Default setting

- During the Back Side Scan

##### (c) Functions

- Warning Detection
- During the Back Side Scan

### 5.16.14 Stamp

#### (1) Use

- To set the mounting status of the optional stamp unit SP-501.
- To use when setting up the stamp unit SP-501.

#### (2) Default setting

- Unset

#### (3) Setting item

- Set
- Unset

### 5.16.15 Network Fax Settings

#### (1) Use

- To set whether or not to use network fax function.
- To use network fax function (IP address fax, internet fax).
- Selection will be available when each network fax function is set to "ON" in [Administrator Settings] -> [Network Settings] -> [Network Fax Settings] -> [Network Fax Function Settings].

#### (2) Default setting

- OFF

#### (3) Setting item

IP Address Fax
- ON
- OFF

Internet Fax
- ON
- OFF

### 5.16.16 RX File Change Page Name

#### (1) Use

- To set whether to change the document file name to forward TX or take out a file from the Memory RX Box.

#### (2) Default setting

- Do Not Change

#### (3) Setting item

- Change
- Do Not Change

### 5.16.17 ADF Settings

#### (1) Use

- To configure ADF installation settings.

#### (2) Default setting

- Unset

#### (3) Setting item

- Unset
- Single-Sided Scan Tx
- Dual Scan Document Feeder

### 5.16.18 Image Stabilization Setting

#### (1) Use

- To change the type and timing of image stabilization.
- To provide the desirable image stabilization control that depends on customer's machine usage pattern, i.e. the ratio of color to black print.

| | | |
|---|---|---|
| Standard | This mode is suitable for low-volume users and reduces the number of times image stabilization is carried out when the main power switch is turned ON. | If the change of absolute humidity is detected during warm-up, normal stabilization is performed during warm-up. |
| Color Priority | This mode is suitable for high-volume and high ratio of color print users. | Color stabilization sequence is performed unconditionally when the main power switch is turned ON. |
| Black Priority | This mode is suitable for users who use mainly black print and use less color print. It provides monochrome stabilization and reduces the number of times image stabilization is carried out when the main power switch is turned ON. | If the change of absolute humidity is detected during warm-up, monochrome stabilization is performed during the warm-up and color stabilization is performed before color printing. |

#### (2) Default setting

- Standard

#### (3) Functions

- Standard
- Color Priority
- Black & White Priority

### 5.16.19 User Paper Settings

#### (1) Use

- To set and register individual user paper that includes a different basic weight, fusing temperature, 2nd image transfer fine adjustment value.
- The setting can also be selected by [User Paper Settings] -> [Expert Adjustments] -> [Environment Settings] -> [Administrator Settings].
- To register a paper type that is suitable for individual customer's intended use and use environment.
- The following shows user paper registration keys and corresponding paper types.

| | |
|---|---|
| User Paper 1/2 | Plain paper |
| User Paper 3 | Thick 1 |
| User Paper 4 | Thick paper 1+ |
| User Paper 5 | Thick 2 |
| User Paper 6 | Thick 3 |

#### (2) Procedure

1. Call the Service Mode to the screen.
2. Touch [System 2] -> [▶] -> [User Paper Settings].
3. Select the desired key from [User Paper 1] to [User Paper 6] to register user paper.
4. Select [Basic Weight] and enter a value with the [+] / [-] key.

5. Select [600dpi] and enter a fusing temperature with the [+] / [-] key.
   The setting range is -20 °C to +10 °C. (1 step: 5 °C)
6. Select a target item of the [Secondary transfer adj.], and enter a 2nd image transfer fine adjustment value with the [+] / [-] key. (Only [1-Side]/[2-Side] can be selected for User Paper 5 and User Paper 6.)
   The setting rage is -8 to +7. (1 step: 1 increment or decrement)
7. Set paper of A4S/A4 or 8 1/2 x 11S/81/2 x 11 on the manual tray.
8. Select [1Side] (only front side) or [Front side] (only back side) and press the Start key.
9. Check the image of the output test pattern.
   If the image is not acceptable, adjust the settings and output the test pattern again.

#### (a) Test Pattern in User Paper Settings

- The printable test pattern for user paper settings is provided to ease determining the most appropriate 2nd image transfer output value when customizing user paper.
- The test pattern outputs a pattern for Standard value A (2nd image transfer output control) according to the 2nd image transfer fine adjustment setting range. (Every two steps)
- Refer to the printed pattern, and select the 2nd image transfer fine adjustment setting.

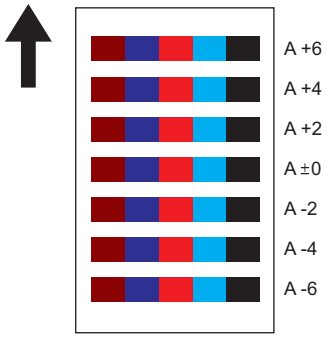


| | |
|---|---|
| A: | Standard voltage |

### 5.16.20 Coverage Rate Screen

#### (1) Use

- To set whether or not to display a coverage rate on the sales counter screen and sales counter list.
- Coverage Counter instead of Coverage Rate is displayed when Switch No. 206 is set to [00000001] at Bit assignment/[01] at HEX assignment in [Service Mode] -> [System 2] -> [Software Switch Setting].

#### (2) Default setting

- Do Not Display

#### (3) Setting item

- Display
- Do Not Display

### 5.16.21 JAM Code Display Setting

#### (1) Use

- To set whether or not to add a jam code to a jam warning display on the control panel when a jam occurs.

#### (2) Default setting

- Do Not Display

#### (3) Setting item

- Do Not Display
- Display

### 5.16.22 Customize Screen

#### (1) BootUp Screen

##### (a) Use

- To customize the BootUp Screen displayed upon machine start-up.
- Use this feature when changing the KonicaMinolta logo displayed on the control panel upon start-up to a client company logo or others for client's intended use of the machine.
- Register logo data in the machine's flash ROM via a USB memory device.
  The following are the logo data specifications that should be met.

| | |
|---|---|
| Image format | PNG format |
| File extension | *. png |
| File name | BootupScreen.png |
| Image size | 800 x 480 dots |
| Color | 256 colors (Palette that the machine specifies is used.) |

**NOTE**
- **When making the logo data, use the exclusive image making tool.**
- **If a USB memory is not connected or a nonconforming USB memory is connected, “USB NG” is displayed and logo data cannot be registered.**
- **If the file name of logo data does not conform to the above specifications, "File NG" message is displayed and logo data cannot be registered.**

#### (b) Procedure

1. Save logo data that conforms to the above specifications in the root directory of a USB memory device.
   **NOTE**
   - **Be sure to save data in the root directory as the machine cannot detect data saved in other directories.**
2. Connect the USB memory device to the machine USB port.
3. Touch [System 2] -> [▶] -> [Customize Screen] -> [BootUp Screen].
4. Touch [Set].
5. Check result “OK” is displayed and touch [END].
   **NOTE**
   - **If logo data is already registered, new logo data overwrites the existing logo data.**
   - **The color of logo data may look different between the machine control panel and some PC screens. After registering logo data, restart the machine and check the color of the logo data on the BootUp screen.**

* To delete registered data, touch [Delete] and check result “OK” is displayed.

### (2) Machine Image

#### (a) Use

- To customize the exterior view of the machine displayed on the control panel.
- Use this function to change the exterior view of the machine displayed on the control panel to the exterior view of the customer business office according to the user's need.
- The exterior view data is registered in the SSD by way of a eMMC board.
- Check the version of the installed exterior view data. (When the USB memory is not connected)

#### (b) Procedure

1. Save the exterior view data in the root directory of the USB memory.
   **NOTE**
   - **Be careful that the MFP is unable to recognize data saved in any directories other than the root directory.**
2. Connect the USB memory to the USB port of the machine.
3. Touch [System 2] -> [▶] -> [Customize Screen] -> [Machine Image].
4. Touch [Set].
5. Check result “OK” is displayed.
6. Turn OFF and ON the main power switch.
   **NOTE**
   - **Any exterior view data that has previously been registered will be overwritten by subsequent new data as it is registered.**
   - **To delete registered data, touch [Delete] and make sure that "OK" appears.**

## 5.16.23 Install Data

### (1) Use

- To install voice data, movie data, OCR dictionary data, or PDF/A font into HDD.
- To install panel sound data to FLASHROM inside the control panel unit.
- Selection of [OEM] makes customization of driver name, etc. possible by writing the OEM extended character string in the firmware package and downloading it.
- To use when the logical format of the hard disk is performed.

**NOTE**
- **The [Panel Sound Data] is displayed only when a sound IC chip has been installed.**

### (2) Procedure

**NOTE**
- **To use voice guidance, the optional upgrade kit UK-211 and i-Option LK-104 v3 must be activated. The optional local interface kit EK-608 or EK-609 must be mounted.**
- **To use OCR function, the optional upgrade kit UK-211 and i-Option LK-105 v4 must be activated.**
- **To create PDF/A-compliant PDF files where PDF/A font is used, optional upgrade kit UK-211 and i-Option LK-102 v3 must be enabled.**

1. Save data (*.tar) into the root directory of a USB memory device.
2. To install the voice guidance, check if [Administrator Settings] -> [Voice Guidance Settings] -> [Voice Guidance] is set to “Yes”.
3. Connect the USB memory device to the machine USB port.
4. Touch [System 2] -> [▶] -> [Install Data].
5. Touch [Movie Data], [Voice Data], [OCR Dictionary], [PDF/A Font], [Panel Sound Data], or [OEM]. You can select the above six types of data at a time and install them.
6. Touch [Set].
7. Press the Start key to install the data.
8. Check result “OK” is displayed and touch [END].
   **NOTE**
   - **If data is already installed, it is necessary to delete old data before installing new one.**

* To delete registered data, select the data to be deleted, and touch [Delete] -> [Fix]. Check result “OK” is displayed.

### 5.16.24 Local Interface Kit Setting

#### (1) Use

- To set whether to enable or disable the Bluetooth function.
- Use this setting upon set-up of the optional local interface kit EK-609.

#### (2) Default setting

- Unset

#### (3) Setting item

- Set
- Unset

### 5.16.25 CIS Image Adjustment

#### (1) Use

- To compensate colors so that the brightness, saturation, and hue of the back side image data (CIS image scanning quality) become consistent with those of the front side image data.
- It will be displayed only when the optional dual scan document feeder DF-704 is mounted.

| | |
|---|---|
| Brightness | Increase in the positive (+) direction makes the data brighter (paler) and increase in the negative (-) direction makes the data darker (deeper). |
| Saturation | Increase in the positive (+) direction makes the data clearer and increase in the negative (-) direction makes the data more subdued. |
| Hue | Increase in the positive (+) direction processes and outputs the data in the way that corresponds to the clockwise rotation on the hue circle. Increase in the negative (-) direction processes and outputs the data in the way that corresponds to the counterclockwise rotation on the hue circle. |

#### (2) Default setting

- 0

#### (3) Setting range

- -3 to +3 (step: 1)

#### (4) Procedure

1. Call the Service Mode to the screen.
2. Touch [System 2] -> [▶]-> [CIS Image Adjustment].
3. Select [Brightness], [Saturation] or [Hue].
4. Use the [+] or [-] key to change the setting value.
5. Touch [OK].

### 5.16.26 Display Eco Index

#### (1) Use

- To set whether or not to display [Power Consumption] and [CO2 Emission] in Menu -> [Counter] -> [Eco Info].
  The amount of power consumption displayed on MFP is an estimated value calculated from the average amount of power consumption and the operating hours of MFP, so that is not an exact power consumption value. Therefore, explain this to users before selecting the option of displaying these items.
- To set an emission coefficient used to calculate the amount of CO2 emission.
  As the CO2 emission coefficient is different depending on the electric power provider with whom the user contracts and the user's MFP use environment, the coefficient needs to be set individually.

#### (2) Default setting

- Power Savings Display Level: OFF
- Output Coefficient Settings: 0.4166

#### (3) Procedure

1. Explain to users that [Power Consumption] and [CO2 Emission] displayed on MFP are estimated values, and obtain their consent.
2. Call the Service Mode to the screen.
3. Touch [System 2] -> [▶] -> [Display Eco Index].
4. Select [ON] in [Power Savings Display Level].
5. Depending on the user's MFP use environment, configure [Output Coefficient Settings] using the 10-key pad.
6. Touch [END].

### 5.16.27 Internal Error. Auto Cancel

#### (1) Use

- To set whether or not to automatically reset trouble when a trouble code classified as rank B or C occurs.

#### (2) Default setting

- Rank B: Yes
- Rank C: Yes

#### (3) Behavior

- When this setting is set to "Yes," MFP operates as follows:

1. When specified trouble occurs, the trouble warning screen displays for about 10 seconds the message that the trouble is automatically reset. Then automatic trouble reset is performed.
2. If the trouble reset is successful, MFP can be used.
   If the trouble reset fails, retry is performed. (The number of retries is up to 2 times.)

### 5.16.28 Acquiring Settings

#### (1) Use

- To count frequency of use by each function and collect machine configuration information.
- This setting allows us to understand the trend in the market and the usage of MFP by collecting and counting frequency of use by each function.
- The collected information can be obtained only via CSRC and cannot be displayed on the control panel or printed.
- To send the collected information, [Administrator Settings] -> [System Settings] -> [List/Counter] -> [Fax Activity Summary Information] must be set to “Allow.”

#### (2) Default setting

- ON

#### (3) Setting item

- ON
- OFF

### 5.16.29 Driver Install

#### (1) Use

- To install/uninstall the loadable device driver.
- Used when the authentication device that needs the loadable device driver (include AU-102 and AU-201S) is attached.

#### (2) Procedure (Install)

1. Prepare a USB memory where only the loadable device driver is stored in the ROOT directory. (Only one loadable device driver must be stored in the USB memory, and please do not save any other data in the USB memory.)
2. Connect the USB memory to the USB port of the MFP.
3. Call the Service Mode to the screen.
4. Touch [System 2] -> [▶] -> [Driver Install] -> [Install].
5. Touch [Loadable Driver] and touch [Start] to install the data.
6. Check that data is normally installed from the message that appears on the control panel.
7. Turn OFF the main power switch.
8. Remove the USB memory.

#### (3) Procedure (Uninstall)

1. Call the Service Mode to the screen.
2. Touch [System 2] -> [▶] -> [Driver Install] -> [Uninstall].
3. Select a driver to be uninstalled.
4. Touch [Start] to uninstall the data.
5. Check that data is normally uninstalled from the message that appears on the control panel.
6. Turn OFF and ON the main power switch.

### 5.16.30 Application Change Setting

#### (1) Use

- To set whether to allow a change of the settings for the specified application start.

#### (2) Default setting

- Permit

#### (3) Setting item

- Permit
- Prohibit
- If “Permit” is set, [Specified Application Start Setting] of the administrator settings can be configured.

### 5.16.31 Custom Pattern

#### (1) Use

- To register or delete custom patterns.
- To customize the panel display by allowing MFP to read the setting file (CPD file) that defines whether or not to display the various setting keys that appear on the control panel.

- When making the setting file (CPD file), use the "Panel Customization Tool."

### (2) Panel customization tool

#### (a) System requirement

| | |
|---|---|
| PC | PC-AT compatible machine |
| CPU | Conforms to the specifications of the operating system |
| Memory (RAM) | Conforms to the specifications of the operating system |
| HDD | 100 MB or more free space is required |
| Display | 1280 x 800 pixels or more, 24bit full color |
| OS | • Windows 7 Professional (SP1 or later)*<br>* 32-bit (x86) and 64-bit (x64) editions of Windows are supported. |

#### (b) Operation procedures

When creating a new display setting file (CPD file):

1. Start up the Panel Customization Tool.
2. Set a name for your customization in [Name]. (1 to 24 characters consisting of one-byte alphanumerics and symbols. Comma cannot be used.)
3. Select a model in [Model].
4. Select a preset pattern or marketing area in [Preset]. (The number of functions displayed in the Function list below decreases in the order of Full > Standard > Basic. )
5. Select whether items should be displayed (ticked) or hidden (unticked) in [Function]. (Make this setting both in the Copy tab and the Scan/Fax tab.)
6. Save the setting file (CPD file) with one-byte alphanumerics and symbols in [Save as…].

When editing an existing setting file (CPD file):

1. Start up the Panel Customization Tool.
2. Select a model in [Model].
3. Select an existing setting file (CPD file) in [File] -> [Open].
4. Select whether items should be displayed (ticked) or hidden (unticked) in [Function].
5. Save the setting file (CPD file) with one-byte alphanumerics and symbols in [Save as…].

### (3) Procedure

1. Copy the setting file (CPD file) to the root directory of a USB memory.
2. Connect the USB memory to the USB port of the MFP.
3. Call the Service Mode to the screen.
4. Touch [System 2] -> [▶] -> [Custom Pattern].
5. Select [Custom Pattern 1], [Custom Pattern 2] or [Custom Pattern 3].
6. Touch [Import] and press Start Key to import the data.
7. Select the registered custom pattern in [Administrator Settings] -> [System Settings] -> [Custom Display Settings] -> [Custom Function Pattern Selection].

*To delete registered data, make sure that the custom pattern is not selected in [Administrator Settings] -> [System Settings] -> [Custom Display Settings] -> [Custom Function Pattern Selection], and touch [Delete] -> [Fix] and check that the result "OK" appears.

## 5.16.32 Maintenance Mode

**NOTE**

- **To enable the maintenance mode, set [Maintenance Mode Access] in the administrator settings to [Allow]. [Administrator Settings] -> [Security Settings] -> [Maintenance Mode Access]**
- The authentication procedure to log on to Administrator Settings or Service Mode is canceled during setup or setup change to thereby achieve a shorter operating time.
- The following functions are enabled in the Maintenance Mode.
  - A bar appears in the upper row of the control panel.

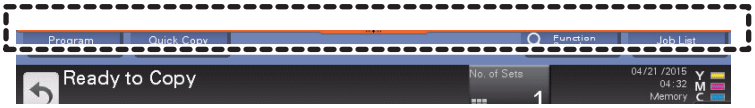


- The Administrator password is skipped (there is no need to enter the password)
- The CE password is skipped. (there is no need to enter the CE password)
- Import/export setting can be displayed even without the setting made for switch number "72" of the software SW setting.

### (1) Setting items

| | |
|---|---|
| Maintenance Mode | Set whether to enable or disable the Maintenance Mode.<br>The default setting is "Disabled". |
| Display language | Select the language to be displayed in the Maintenance Mode. When [Not Set] is selected, the displayed language is that valid before the machine enter the Maintenance Mode.<br>The default setting is "Not Set". |
| Clearing job history upon exit | Set whether to erase the past job history and the job history during the Maintenance Mode. |

| | |
|---|---|
| | The default setting is "Set". |

### (2) Exiting the Maintenance Mode

- To exit the Maintenance Mode, select [Service Mode] -> [System 2] -> [Maintenance Mode] and touch [Invalid], or touch the arrow key on the control panel and select [Yes].

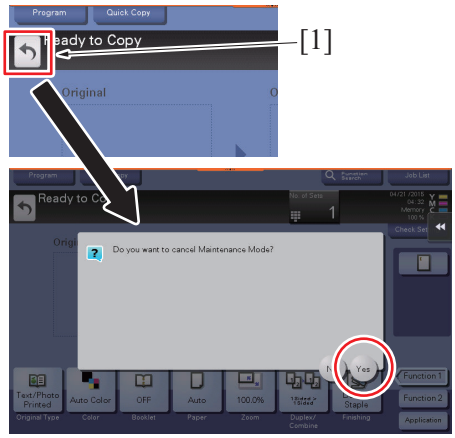


| | | | |
|---|---|---|---|
| [1] | Arrow key | - | - |

## 5.16.33 Smart Fusing Control

### (1) Use

- Specifies whether or not to apply low power fusing control.
- For details of the low power fusing control, see “O.14.3.8 Smart Fusing Control”.

| | |
|---|---|
| [Permit] | Applies low power fusing control by lowering the target temperature as much as possible in response to the single sheet data. Cuts down electric power consumption (TEC value). |
| [Prohibit] | Controls the adjustment of the specified fusing temperature. |

### (2) Default setting

- Permit

### (3) Setting item

- Permit
- Prohibit

## 5.16.34 Cleaning Unit Setting

### (1) Use

- Use this feature upon the optional clean unit CU-101 set-up.

### (2) Default setting

- Unset

### (3) Setting item

- Set
- Unset

## 5.17 Counter

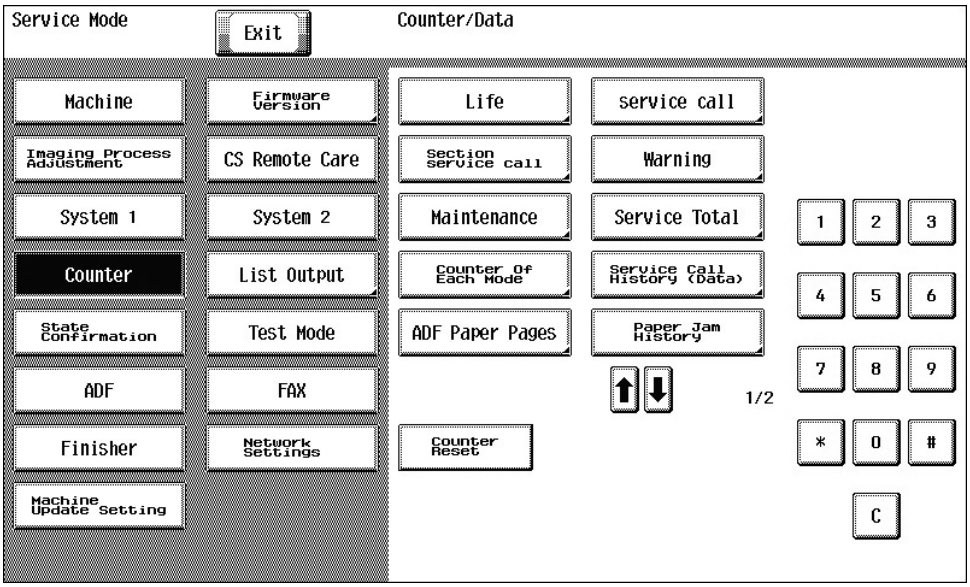


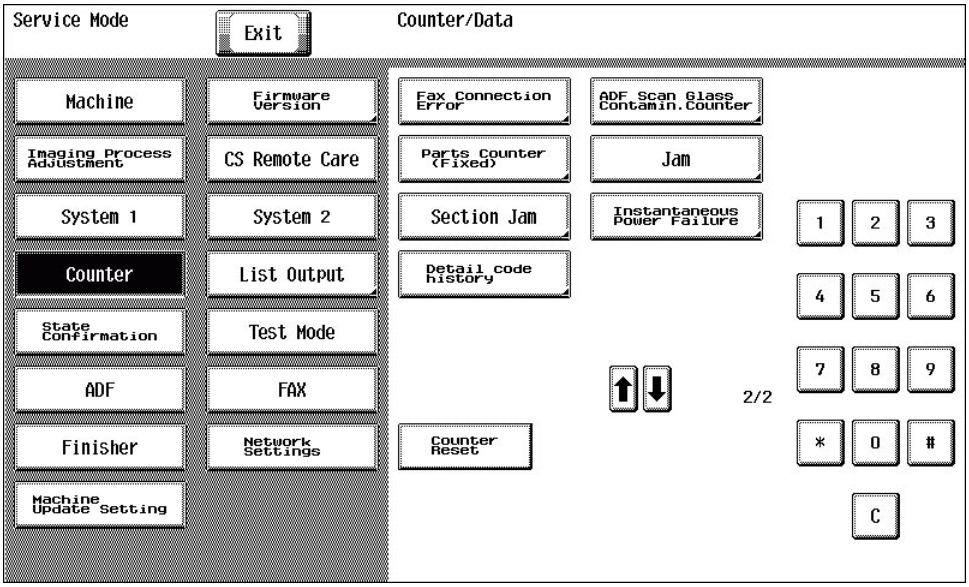


- The counter displays the counts of various counters to allow the technical representative to check or set as necessary.

### 5.17.1 Common procedure

1. Call the Service Mode to the screen.
2. Touch [Counter] to show the counter menu.
3. Select the specific counter to be displayed.
4. To clear the counts of two or more counters within a group or across different groups at once, touch [Counter Reset], select the specific counters to be cleared, and touch [END]. Two or more counters can be selected. (However, the [Service Call], [Service Total], and [JAM] counters cannot be selected.)

### 5.17.2 Life

#### (1) Use

- To check the number of hours or times each of the different maintenance parts has been used.
- To clear the count of each counter.
- To perform New Release in fusing unit and transfer belt unit.
- To check how many times maintenance parts have been used.
- When each of the maintenance parts is replaced.

#### (2) Procedure

##### (a) Counter clear

- To clear the count of a counter, select the specific part and touch Clear.
- It is not possible to clear the count of the counters for the fusing unit, transfer belt unit, imaging unit and TCR new article detection.
- For the count method of each counter, see the table “Count method of each life counter.”

Count method of each life counter

| Counter item | Counting method |
|---|---|
| Fusing Unit Page Count | • Counts how many sheets have been ejected. The counter increases by 1 per every 216 mm in the paper feeding direction and shows the total count. For paper length less than 216 mm in the paper feeding direction, the counter uses 216 mm as the paper length. |
| Transfer Belt Unit Rotation Time | • Counts how many hours the transfer belt unit has turned. |
| Transfer Belt Unit Page Count | • Counts how many sheets have been ejected. The counter increases by 1 per every 216 mm in the paper feeding direction and shows the total count. For paper length less than 216 mm in the paper feeding direction, the counter uses 216 mm as the paper length. |
| Transfer Roller Unit | • Counts how many hours the transfer roller unit has turned. |
| Toner Filter | • Not used |
| 1st. | • Number of sheets of paper fed from tray 1 |
| 2nd. | • Number of sheets of paper fed from tray 2 |
| 3rd. | • Number of sheets of paper fed from tray 3 |
| 4th. | • Number of sheets of paper fed from tray 4 |
| Manual Tray | • Number of sheets of paper fed from the bypass |
| Drum Unit (C) Rotation Time | • Counts how many hours PC drum has turned. |
| Drum Unit (M) Rotation Time | |
| Drum Unit (Y) Rotation Time | |
| Drum Unit (K) Rotation Time | |
| Developing Unit (C) Print Count | • Counts how many sheets have been printed. The counter increases by 1 per every 216 mm in the paper feeding direction and shows the total count. For paper length less than 216 mm in the paper feeding direction, the counter uses 216 mm as the paper length. |
| Developing Unit (Y) Print Count | |
| Developing Unit (M) Print Count | |
| Developing Unit (K) Print Count | |
| LCT Parts | • Number of sheets of paper fed from the LCT (LU-302). |
| LCT (Built-in) Parts | • Number of sheets of paper fed from the built-in LCT(PC-410) |
| ADF Feed | • Number of sheets of original fed through the take-up section of the DF |
| ADF Reverse | • Number of sheets of original fed through the turnover unit of the DF (DF-629 only) |
| TCR new article detection (C) | • Count the number of the replacement of the developing unit. |
| TCR new article detection (M) | |
| TCR new article detection (Y) | |
| TCR new article detection (K) | |

#### (3) New Release

- After replacing a fusing unit or transfer belt unit, perform New Release to clear its life counter.

1. Touch [Counter] -> [Life] -> [New Release].
2. Open the front door.
3. Select a unit where New Release is made.
4. Press the Start key and perform New Release.

#### (4) New Release Disable mode

- To enable a unit that is used temporarily for troubleshooting to be used again as a new unit in another machine, the New Release Disable mode is provided.
- Applicable units are the following units that have the new unit detection feature.
  Drum unit (each color), developing unit (each color)
- See the "I.7.3.9.(4) Notes when using the New Release Disable mode" for the method of enabling the New Release Disable mode.

### 5.17.3 Service Call

#### (1) Use

- To count and display how many times trouble has been detected on a trouble type basis.
- Use this feature to check how many times trouble has occurred.

**NOTE**

- **In the service call counter list, "Reboot" shows how many times abort code (C-FXXX) has occurred.**

### 5.17.4 Section Service Call

#### (1) Use

- To count and display how many times trouble has been detected during a certain period, i.e. an interval between service visits, on a trouble type basis.
- Use this feature to check how many times trouble has occurred in a certain period, i.e. an interval between service visits.
- By clearing the counter at the time of visit to your customer, i.e. service visit, you can check how many times trouble has occurred since the previous visit.
  To reset the counter, use [Counter Reset].

**NOTE**

- **In the zone service call list, "Reboot" shows how many times abort code (C-FXXX) has occurred.**

### 5.17.5 Warning

#### (1) Use

- To count and display how many times malfunction code has been detected on a malfunction code type basis.
- To clear of count value.
- To check the number of warning conditions detected according to the warming type.

#### (2) Procedure

- To clear the count of a counter, select the specific part and touch Clear.
- If a counter is cleared mistakenly, touch Interrupt which will undo the clearing operation.
- When a warning condition occurs, an oil mark appears at the upper right area of the basic screen. Touching the oil mark will display the malfunction code screen.

### 5.17.6 Maintenance

#### (1) Use

- To set a count value for maintenance of any given part.
- When any given part is replaced.

#### (2) Procedure

Maint.-Set

- Enter the maintenance counter value from the 10-key pad.

Maint.-Count

- The number of sheets that have been ejected is counted up. (1 sided: 1 count, 2 sided: 2 count)
- Touch Clear will clear the count.
- If a count is cleared mistakenly, touch Interrupt, which will undo the clearing operation.

### 5.17.7 Service Total

#### (1) Total

##### (a) Use

- To display the count value for the service total counter.
- Use to check the total No. of printed pages including the ones printed by the Service Mode.

##### (b) Procedure

- Service Total: No. of pages printed by user mode and Service Mode.
- Service Total (Duplex): No. of pages printed by user mode and Service Mode in duplex.

#### (2) Paper Size 1/Paper Size 2

##### (a) Use

- To display the count value for service total counter of each paper size.
- To check the total number of printed pages including the one at Service Mode according to each paper size.
- The count of Paper Size 1 and Paper Size 2 that contain the following paper sizes is provided respectively.

| | |
|---|---|
| Paper Size 1 | SRA3, A3, A4, A4S, A5, A6, B4, B5, B5S, B6, Post., 12 x 18, 11 x 17, 8 $^1/_2$ x 14, 8 $^1/_2$ x 11, 8 $^1/_2$ x 11S, 7 $^1/_4$ x 10 $^1/_2$, 5 $^1/_2$ x 8 $^1/_2$, 4 x 6, Foolscap |
| Paper Size 2 | 8K, 16K, Long Length, Others |

### 5.17.8 Counter of Each Mode

#### (1) Use

- To display the printed pages in the following specified modes; copy, printer, scanner, and fax. It also displays the count value of using the specified mode.

| | |
|---|---|
| Copy/Print/Scanner counter | Displays individual counts in copy, printer, and scan mode. |
| Fax-related counter | Displays individual counts in fax mode. |
| Counter by finishing option | Displays individual counts on a finishing option basis. |
| Stabilization counter | Displays individual counts on a basis of the factors that cause image stabilization. The counter helps to understand what causes image stabilization and how to improve image stabilization control. |
| PJ counter | Jobs that the machine has processed are divided according to the number of pages per job: 1P/J, 2P/J, ... 10P/J, or 11P/J and more. The total number of jobs in each group is counted and displayed separately based on whether job is processed in color, monochrome, or auto color mode.<br>The counter is used to understand how the machine has been used in the field. |

### 5.17.9 Service Call History (Data)

#### (1) Use

- To display the trouble history in chronological order.

### 5.17.10 ADF Paper Pages

#### (1) Use

- To display the No. of sheets and mixed originals fed to the ADF.

### 5.17.11 Paper Jam History

#### (1) Use

- To display the jam history in chronological order.

**NOTE**

- **[Code] displayed on the screen of JAM history indicates JAM code. For details of JAM code, see "K.1.1 List of the JAM code."**

### 5.17.12 Fax Connection Error

#### (1) Use

- To display the No. of fax transmission errors occurred.

### 5.17.13 ADF Scan Glass Contamin. Counter

#### (1) Use

- To display the average number of detected stain on the DF original glass (front side)/CIS glass (back side) at the pre-detection.
- Detection of CIS glass (back side) is available only when DF-704 is mounted.

| | |
|---|---|
| Pre-detection small size (Front Side) | Small-sized detected stain divided by the number of times pre-detection is practiced (average number of detected lines) will be displayed. |
| Pre-detection small size (Back Side) | Small-sized detected stain divided by the number of times pre-detection is practiced (average number of detected lines) will be displayed. |
| Cleaning brush rotation count (Front Side) | Total rotation count is displayed by counting 1 per one rotation of cleaning brush. |
| Cleaning brush rotation count (Back Side) | Total rotation count is displayed by counting 1 per one rotation of cleaning brush. |

#### (2) Procedure

- To clear each counter value, select the items to be cleared, and touch Clear.
- If a count is cleared mistakenly, touch Interrupt, which will undo the clearing operation.

### 5.17.14 Parts Counter (Fixed)

- It will be displayed only when the optional finisher is mounted.

#### (1) Use

- When the optional finisher is mounted, the parts counter screen displays the relevant parts and their counts.
- When the relevant parts are replaced, their counters need to be reset to update the service history.
- Service history can be maintained from this menu.

**NOTE**

- **See the table below for the relevant parts and count method.**

#### (2) Procedure

1. Touch in the order of [Service Mode] -> [Counter] -> [↑] -> [Parts Counter (Fixed)].
2. Check the parts counter or display the relevant part of which counter will be reset.
3. Check the part count.
   To reset the count value, touch the key of the part where the counter is reset. Touch the Clear key.

#### (3) Fixed parts to be counted

| No. | CSRC parameter | Parts name | Parts number | Limit value | Count condition | FS-534 / FS-534SD | FS-533 |
|---|---|---|---|---|---|---|---|
| 001 | 22 | FNS 2-Staple Stapler | PJ085601 | 300,000 | - | - | - |
| 002 | 23 | FNS Center Staple & Fold Stapler | A10D9293 | 200,000 | 1 count for each sheet ejection in both 1 staple and 2 staple mode. | ○ | - |
| 003 | 3A | Stacker Accessory Plate Movement Monitor | 56AA8002 | 3,000,000 | - | - | - |
| 004 | 26 | FNS 1st Mid Fold Knife Motor | A3ERPP4S | 2,000,000 | 1 count for each sheet ejection in half-fold, saddle stitch, and tri-fold mode | ○ | - |
| 005 | 56 | FNS 2nd Mid Fold Knife Motor | A3ERPP5R | 2,000,000 | 1 count for each sheet ejection in tri-fold mode | ○ | - |
| 006 | 34 | FNS Output roller/A | A3ERPP4S | 300,000 | - | - | - |
| 007 | 57 | FNS FD Alignment Roller | A2YUPPG0/4 | 1,000,000 | 1 count for each 1 stack | - | ○ |
| 008 | 29 | PI sheet paper feed clutch (Upper) | 13QN8201 | 1,000,000 | - | - | - |

| No. | CSRC parameter | Parts name | Parts number | Limit value | Count condition | FS-534 / FS-534SD | FS-533 |
|---|---|---|---|---|---|---|---|
| 009 | 2A | PI sending Roller Pair/ A (Upper) | 50BA-574 | 200,000 | - | - | - |
| 010 | 2B | PI sending Roller Pair/ B (Upper) | 50BA-575 | 100,000 | - | - | - |
| 011 | 2C | PI Reversal Rubber Pair (Upper) | 13QN-443 | 100,000 | - | - | - |
| 012 | 2D | PI Torque Limiter (Upper) | 13QN4073 | 600,000 | - | - | - |
| 013 | 3C | PI Tray Up/Down Motor (Up) | 12GQ8002 | 1,000,000 | - | - | - |
| 014 | 2E | PI sheet paper feed clutch (Lower) | 13QN8201 | 1,000,000 | - | - | - |
| 015 | 2F | PI sending Roller Pair/ A (Lower) | 50BA-574 | 200,000 | - | - | - |
| 016 | 30 | PI sending Roller Pair/ B (Lower) | 50BA-575 | 100,000 | - | - | - |
| 017 | 31 | PI Reversal Rubber Pair (Lower) | 13QN-443 | 100,000 | - | - | - |
| 018 | 32 | PI Torque Limiter (Lower) | 13QN4073 | 600,000 | - | - | - |
| 019 | 3D | PI Tray Up/Down Motor (Down) | 12GQ8002 | 1,000,000 | - | - | - |
| 020 | 33 | PI Regist | 13QN8201 | 1,000,000 | - | - | - |
| 021 | 3B | Punch Motor | A4JUM101 | 1,000,000 | - | - | - |
| 022 | 37 | PK Counter | - | - | - | - | - |
| 023 | 38 | Punch scrap transportation motor pair | 12GQ-417 | 1,000,000 | - | - | - |
| 024 | 39 | Punch clutch | 13NKK001 | 1,000,000 | - | - | - |

### 5.17.15 Jam

#### (1) Use

- To count and display how many times jam has been detected on a jam location basis.

### 5.17.16 Section JAM

- To count and display how many times jam has been detected in a certain period, i.e. an interval between service visits, on a jam location basis.
- Use this feature to check how many times jam has occurred in a certain period, i.e. an interval between service visits.
- By clearing the jam counter at the time of visit to your customer site, i.e. service visit, you can check how many times jam has occurred since the previous visit.
  To reset the counter, use [Counter Reset].

### 5.17.17 Instantaneous Power Failure

#### (1) Use

- To display the latest 10 power shutdown events during operation of this machine in time axis.
- To reset the counter, use [Counter Reset].

### 5.17.18 Detail code history

#### (1) Use

- To display up to 100 detailed codes of the trouble code FA14 (thread soft error) by “Time series order”, “Monthly occurrence” or “Detailed Code Differentiator”.

## 5.18 List Output

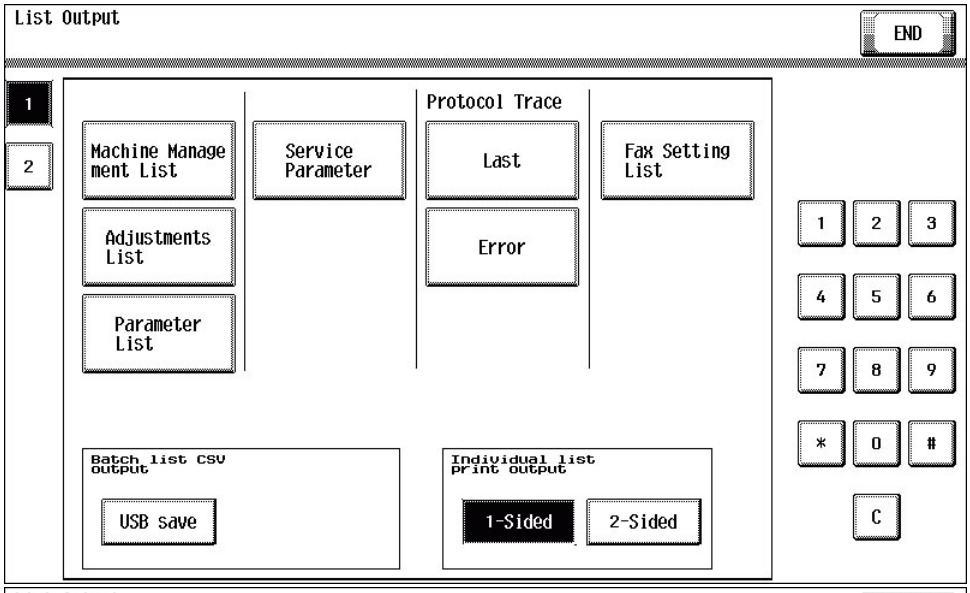


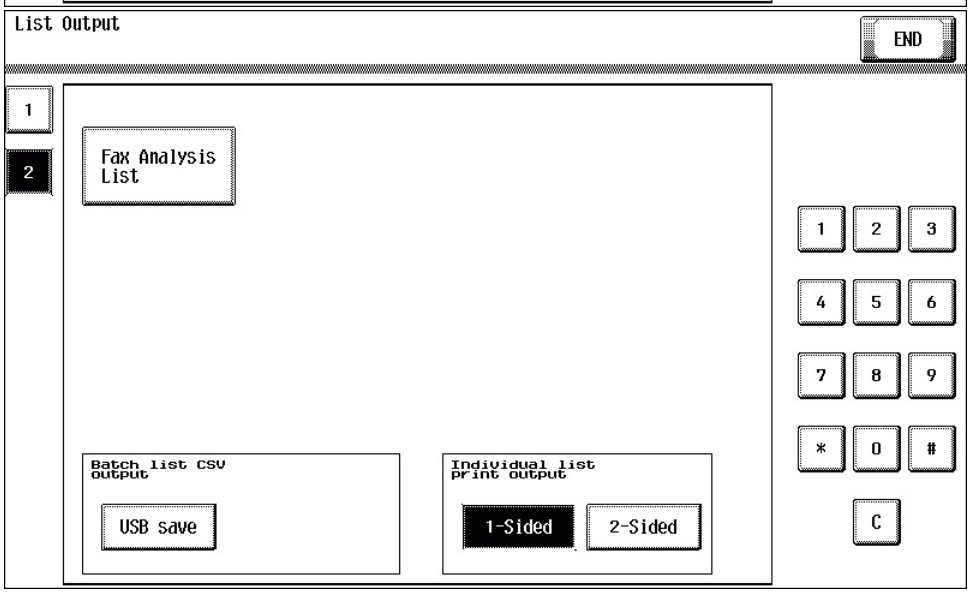


### 5.18.1 Batch list CSV output

#### (1) Use

- To save various lists data into a USB memory device all together with the CSV format.
- Compared to output to paper, outputting various lists data to the USB memory device can save time, paper, and toner. With the output data, analyzing the machine statistically becomes easier.
- Lists data to be output are as follows:

| Target list | Data symbol |
|---|---|
| Machine Management List | S1 |
| Adjustments List | S2 |
| Parameter List | S3 |
| Service Parameter | S4 |
| Protocol Trace List | S5 |
| Fax Setting List | S6 |
| Management List | A1 |
| Paper Size/Type Counter | A2 |
| Network Settings List | A3 |
| Configuration Page | U1 |
| PCL Font List | U2 |
| PS Font List | U3 |
| Meter Count | C1 |

#### (2) Procedure

1. Call the Service Mode to the screen.
2. Touch [List Output].

3. Insert the USB memory device to the USB port (for user).
4. Touch [USB save] displayed in the Batch List CSV Output.
5. Press the Start key.
   Then, List data are transferred to the USB memory device.
6. Confirm that “OK” is displayed as the result of data saving.

<File names of lists data>

- Each list data has its file name in accordance with the following file name rule.
  [2-digit data symbol that corresponds to each list (see the above table)] + [_(underscore)] + [13-digit serial number] + [6-digit date (year, month, and day)] + [2-digit hour] + [2-digit minute].csv

### 5.18.2 Machine Management List

#### (1) Use

- To produce an output of a list of setting values, adjustment values, total counter values, and others.
- At the end of setup.
- At occurrence of a malfunction.
- To produce an output of a list of Software Switch Setting.

#### (2) Procedure

- Load the A4S/A4 or 8 1/2 x 11S/8 1/2 x 11 plain paper to a paper source.
- Press the Start key, which will let the machine produce the list.
- The time-of-day and date will also be printed.

NOTICE

- When performing list output, a detail code history list will be output.
- This [Detail code] is set to analyse the cause of the C-FA14 error or the C-E301 error.
- The refer, to send inquiries to KM, also send the “detail code history list”.

### 5.18.3 Adjustments List

#### (1) Use

- To output the adjustment list for machine adjustment, process adjustment, etc. in Service Mode.
- At the end of setup.
- At occurrence of a malfunction.

#### (2) Procedure

- Load the A4S/A4 or 8 1/2 x 11S/8 1/2 x 11 plain paper to a paper source.
- Press the Start key, which will let the machine produce the list.
- The time-of-day and date will also be printed.

### 5.18.4 Parameter List

#### (1) Use

- Output a nonvolatile parameter list.

#### (2) Procedure

- Load the A4S/A4 or 8 1/2 x 11S/8 1/2 x 11 plain paper to a paper source.
- Press the Start key, which will let the machine produce the list.
- The time-of-day and date will also be printed.

### 5.18.5 Service Parameter

#### (1) Use

- Output a FAX Service Mode set value list.

#### (2) Procedure

- Load the A4S/A4 or 8 1/2 x 11S/8 1/2 x 11 plain paper to a paper source.
- Press the Start key, which will let the machine produce the list.
- The time-of-day and date will also be printed.

### 5.18.6 Protocol Trace

#### (1) Use

- Protocol Trace List (Last): The facsimile protocol of the communication which was executed previously is output.
- Protocol Trace List (Error): Output the facsimile procedure for the last error communication.

#### (2) Procedure

- Load the A4S/A4 or 8 1/2 x 11S/8 1/2 x 11 plain paper to a paper source.
- Press the Start key, which will let the machine produce the list.
- The time-of-day and date will also be printed.

### 5.18.7 Fax Setting List

#### (1) Use

- Output a FAX user set value list. (Items vary depending on models.)

**(2) Procedure**

- Load the A4S/A4 or 8 1/2 x 11S/8 1/2 x 11 plain paper to a paper source.
- Press the Start key, which will let the machine produce the list.
- The time-of-day and date will also be printed.

### 5.18.8 Fax Analysis List

**(1) Use**

- Following list is output in the Fax Analysis List.
  - Parameter List
  - Machine Management List
  - Protocol Trace List (Error)
  - Fax Setting List
  - Communication Management List
  - Service Parameter List

**(2) Procedure**

- Load the A4S/A4 or 8 1/2 x 11S/8 1/2 x 11 plain paper to a paper source.
- Press the Start key, which will let the machine produce the list.
- The time-of-day and date will also be printed.

## 5.19 State Confirmation

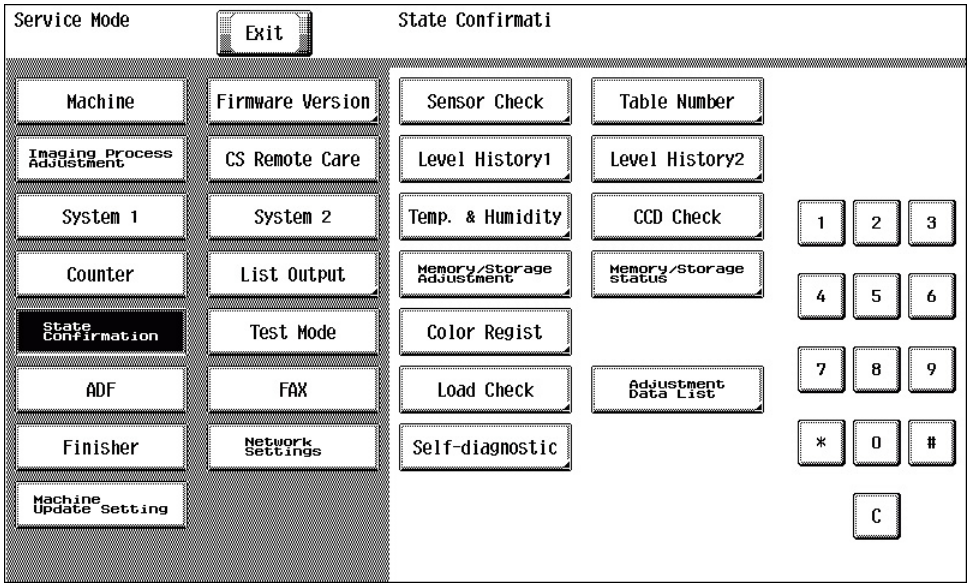


### 5.19.1 Sensor Check

**(1) Use**

- To display the states of the input ports of sensors and switches when the machine remains stationary.
- Used for troubleshooting when a malfunction or a misfeed occurs.

**(2) Procedure**

- The operation of each of the switches and sensors can be checked on a real-time basis.
- It can be checked as long as the 5-V power line remains intact even when a door is open.

**(a) Electrical components check procedure through input data check**

- When a paper misfeed occurs in the paper feed section of the machine, the tray 2 paper feed sensor is considered to be responsible for it.

1. Remove the sheet of paper misfed.
2. From the sensor check list that follows, check the panel display of the tray 2 paper feed sensor.
   For the tray 2 paper feed sensor, you check the data of “Paper feed” of “Tray 2.”
3. Call the Service Mode to the screen.
4. Select [State Confirmation] -> [Sensor Check] and then select the screen that contains “Paper feed” under “Tray 2.”
   For “Paper feed” under “Tray 2,” select “1” on the left-hand side of the screen.
5. Check that the data for “Paper feed” under “Tray 2” is “0” (sensor blocked).
6. Move the actuator to unblock the tray 2 paper feed sensor.
7. Check that the data for “Paper feed” under “Tray 2” changes from “0” to “1” on the screen.
8. If the input data is “0,” change the sensor.

**(3) Sensor check screens**

- These are only typical screens which may be different from what are shown on each individual machine.

**(a) Sensor monitor 1 (Main body, PC-110/210)**

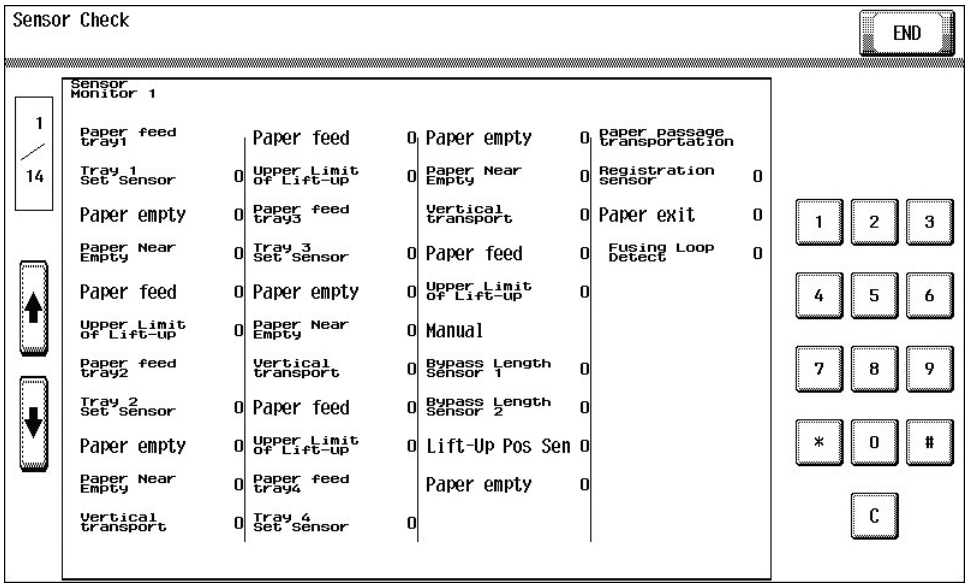


| Symbol | Panel display | Part/signal name | Operation characteristics/panel display | |
|---|---|---|---|---|
| | | | 1 | 0 |
| | Paper feed tray 1 | | | |
| - | Tray 2 Set Sensor | - | Set | Out of position |
| PS24 | Paper empty | Tray 1 paper empty sensor | Paper not present | Paper present |
| PS11 | Paper Near Empty | Tray 1 paper near empty sensor | Near empty | Other than near empty |
| PS23 | Paper feed | Tray 1 paper feed sensor | Paper present | Paper not present |
| PS25 | Upper Limit of Lift-up | Tray 1 upper limit sensor | At raised position | Not at raised position |
| | Paper feed tray 2 | | | |
| - | Tray 2 Set Sensor | - | Set | Out of position |
| PS21 | Paper empty | Tray 2 paper empty sensor | Paper not present | Paper present |
| PS12 | Paper Near Empty | Tray 2 paper near empty sensor | Near empty | Other than near empty |
| PS19 | Vertical transport | Tray 2 vertical transport sensor | Paper present | Paper not present |
| PS20 | Paper feed | Tray 2 paper feed sensor | Paper present | Paper not present |
| PS22 | Upper Limit of Lift-up | Tray 2 upper limit sensor | At raised position | Not at raised position |
| | Paper feed tray 3 | | | |
| - | Tray 2 Set Sensor | - | Set | Out of position |
| PS114 | Paper empty | Tray 3 paper empty sensor | Paper not present | Paper present |
| PS115 | Paper Near Empty | Tray 3 paper near empty sensor | Near empty | Not near empty |
| PS113 | Vertical transport | Tray 3 vertical transport sensor | Paper present | Paper not present |
| PS112 | Paper feed | Tray 3 paper feed sensor | Paper present | Paper not present |
| PS116 | Upper Limit of Lift-up | Tray 3 upper limit sensor | At raised position | Not at raised position |
| | Paper feed tray 4 | | | |
| - | Tray 2 Set Sensor | - | Set | Out of position |
| PS124 | Paper empty | Tray 4 paper empty sensor | Paper not present | Paper present |
| PS125 | Paper Near Empty | Tray 4 paper near empty sensor | Near empty | Not near empty |
| PS123 | Vertical transport | Tray 4 vertical transport sensor | Paper present | Paper not present |
| PS122 | Paper feed | Tray 4 paper feed sensor | Paper present | Paper not present |
| PS126 | Upper Limit of Lift-up | Tray 4 upper limit sensor | At raised position | Not at raised position |
| | Manual | | | |
| PS28 | Bypass Length Sensor 1 | Bypass FD aper size sensor/1 | Paper present | Paper not present |
| PS29 | Bypass Length Sensor 2 | Bypass FD paper size sensor/2 | Paper present | Paper not present |
| PS26 | Lift-Up Pos Sen | Bypass lift-up position sensor | Paper feed position | Standby position |
| PS27 | Paper empty | Bypass paper empty sensor | Paper not present | Paper present |

| Symbol | Panel display | Part/signal name | Operation characteristics/panel display | |
|---|---|---|---|---|
| | | | 1 | 0 |
| | Paper passage transportation | | | |
| PS1 | Registration sensor | Registration sensor | Paper present | Paper not present |
| PS3 | Paper exit | Paper exit sensor | Paper present | Paper not present |
| PS2 | Fusing Loop Detect | Fusing loop sensor | Loop present | Loop not present |

**(b) Sensor monitor 2 (Main body, PC-410)**

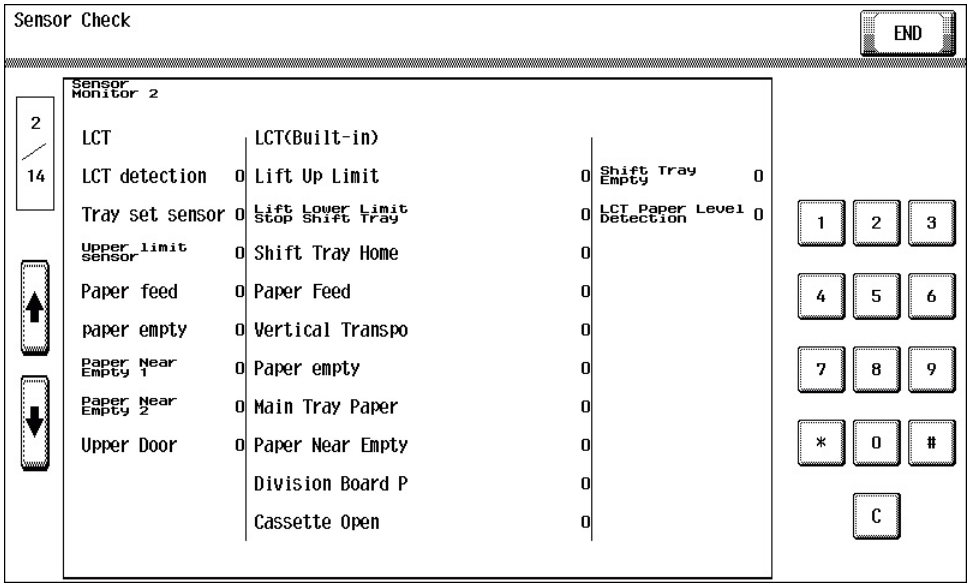


| Symbol | Panel display | Part/signal name | Operation characteristics/panel display | |
|---|---|---|---|---|
| | | | 1 | 0 |
| | LCT | | | |
| - | LCT detection | LCT identification signal | Set | Unset |
| PS1 | Tray set sensor | LU-302: Tray set sensor | Set | Out of position |
| PS2 | Upper Limit Sensor | Upper Limit Sensor | At raised position (Blocked) | Not at raised position (Unblocked) |
| PS3 | Paper Feed | Paper feed sensor | Paper present | Paper not present |
| PS4 | Paper empty | Paper empty sensor | Paper not present | Paper present |
| PS5 | Paper Near Empty 1 | Near empty sensor /1 | Near empty | Unblocked |
| PS6 | Paper Near Empty 2 | Near empty sensor /2 | Near empty | Unblocked |
| MS1 | Upper Door | LU door switch | Close | Open |
| | LCT (Built-in) | | | |
| PS136 | Lift Up Limit | Main tray upper limit sensor | At raised position | Not at raised position |
| PS138 | Lift Lower Limit/Stop Shift Tray | Shifter stop / lower limit position sensor | At lower position | Not at lower position |
| PS139 | Shift Tray Home | Shifter home sensor | At home | Not at home |
| PS132 | Paper Feed | Paper feed sensor | Paper present | Paper not present |
| PS133 | Vertical Transport | Vertical transport sensor | Paper present | Paper not present |
| PS137 | Paper empty | Main tray upper paper empty sensor | Empty | Paper present |
| PS134 | Main Tray Paper Empty | Main tray paper empty sensor | Empty | Paper present |
| PS135 | Paper Near Empty | Main tray paper near empty sensor | Near empty | Not near empty |
| PS142 | Division Board Position | Division board sensor | Set | Unset |
| PS143 | Cassette Open | Cassette set sensor | Open | Close |
| PS140 | Shift Tray Empty | Sub tray paper empty sensor | Empty | Paper present |
| PS141 | LCT Paper Level Detection | Sub tray paper remaining amount sensor | Paper present | Paper not present |

### (c) Sensor monitor 3 (Main body)

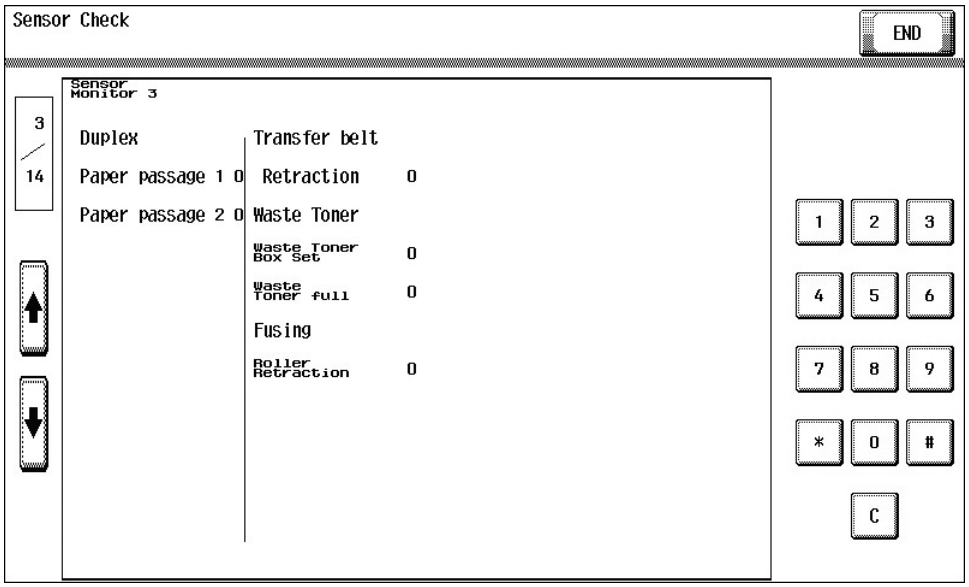


| Symbol | Panel display | Part/signal name | Operation characteristics/panel display | |
|---|---|---|---|---|
| | | | 1 | 0 |
| | Duplex | | | |
| PS40 | Paper passage 1 | ADU paper passage sensor/1 | Paper present | Paper not present |
| PS41 | Paper passage 2 | ADU paper passage sensor/2 | Paper present | Paper not present |
| | Transfer belt | | | |
| PS39 | Retraction | 1st transfer pressure sensor | Not released | Released |
| | Waste Toner | | | |
| PS100 | Dispose Toner Box Set | Waste toner box set sensor | Set | Out of position |
| PS101 | Waste Toner full | Waste toner full sensor | Blocked | Unblocked |
| | Fusing | | | |
| PS38 | Roller Retraction | Fusing pressure home sensor | Not released | Released |

### (d) Sensor monitor 4

- Not used

### (e) Sensor monitor 5

- Not used

### (f) Sensor monitor 6

- Not used

### (g) Sensor monitor 7

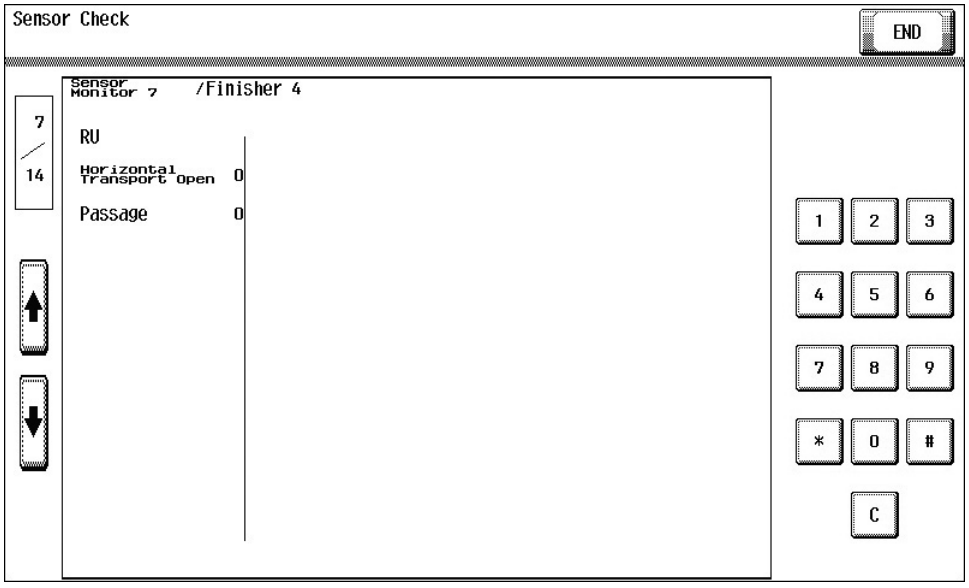

| Symbol | Panel display | Part/signal name | Operation characteristics/panel display | |
|---|---|---|---|---|
| | | | 1 | 0 |
| | RU | | | |
| PS3 | Horizontal Transport Open | RU cover open/close detection sensor | Open | Closed |
| PS2 | Passage | RU entrance sensor | Paper present | Paper not present |

### (h) Sensor monitor 8

- Not used

### (i) Sensor monitor 9

- Not used

### (j) Sensor monitor 10 (FS-534/FS-534SD)

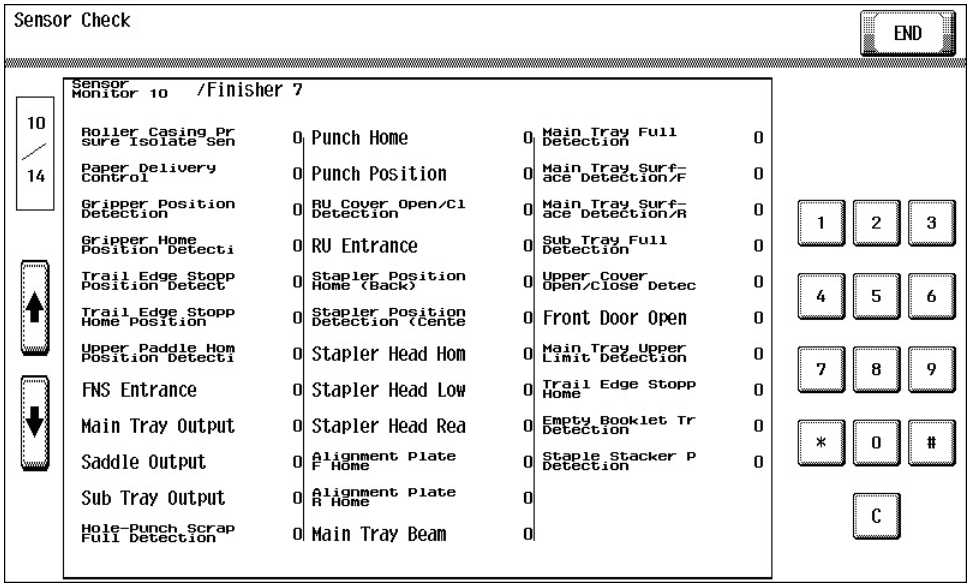


| Symbol | Panel display | Part/signal name | Operation characteristics/panel display | |
|---|---|---|---|---|
| | | | 1 | 0 |
| | Finisher 7 | | | |
| PS11 | Roller Casing Presure Isolate Sen | Receiving roller retraction sensor | Not released | Released |
| PS28 | Paper Delivery Control | Paper delivery control sensor | At home | Not at home |
| PS19 | Gripper Position Detection | Gripper position detection sensor | Not at home | At home |
| PS18 | Gripper Home Position Detection | Gripper home position sensor | At home | Not at home |
| PS22 | Trail Edge Stopper Position Detect | Pre-eject away sensor | Not at home | At home |
| PS20 | Trail Edge Stopper Home Position | Trailing edge stopper home position detection sensor | At home | Not at home |
| PS14 | Upper Paddle Home Position Detection | Upper paddle home position detection sensor | At home | Not at home |
| PS4 | FNS Entrance | FNS entrance sensor | Paper present | Paper not present |
| PS16 | Main Tray Output | Paper delivery control sensor | Paper present | Paper not present |
| PS12 | Saddle Output | Fold exit sensor | Paper present | Paper not present |
| PS8 | Sub Tray Output | Sub tray exit sensor | Paper present | Paper not present |
| PS4/PS5 | Hole-Punch Scrap Full Detection | Punch dust full sensor | Full | Other than full |
| PS1 | Punch Home | Punch home sensor | At home | Not at home |
| PS2 | Punch Position | Puncher home sensor | At home | Not at home |
| PS3 | RU Cover Open/Close Detection | RU cover open/close detection sensor | Open | Closed |
| PS2 | RU Entrance | RU entrance sensor | Paper present | Paper not present |
| PS23 | Stapler Position Home (Back) | Stapler home position sensor (Rear) | At home | Not at home |

| Symbol | Panel display | Part/signal name | Operation characteristics/panel display | |
|---|---|---|---|---|
| | | | 1 | 0 |
| PS24 | Stapler Position Detection (Center) | Stapler position sensor (Center) | Detected | Not detected |
| PS9 | Stapler Head Home | Center stapler /fold home sensor | At home | Not at home |
| - | Stapler Head Low | Staple empty detect sensor | Staple present | Staple not present |
| - | Stapler Head Ready | - | Staple available | Staple unavailable |
| PS12 | Alignment Plate F Home | Alignment plate/F home sensor | At home | Not at home |
| PS13 | Alignment Plate R Home | Alignment plate/R home sensor | At home | Not at home |
| PS6/PS7 | Main Tray Beam | Main tray upper position sensor | Blocked | Unblocked |
| PS29 | Main Tray Full Detection | Main tray full detection sensor | Full | Other than full |
| PS27 | Main Tray Surface Detection/F | Main tray upper position sensor/F | Upper position | Other than upper position |
| PS26 | Main Tray Surface Detection/R | Main tray upper position sensor/R | Upper position | Other than upper position |
| PS9/PS10 | Sub Tray Full Detection | Sub tray full detection sensor | Full | Other than full |
| PS32 | Upper Cover Open/ Close Detection | Upper cover open/close detection sensor | Open | Closed |
| SW1 | Front Door Open | Front door open detect switch | Open | Closed |
| SW2 | Main Tray Upper Limit Detection | Main tray upper position detect switch | At upper limit position | Not at upper limit position |
| PS6 | Trail Edge Stopper Home | Stopper home sensor | At home | Not at home |
| PS13/PS14 | Empty Booklet Tray Detection | Booklet tray empty detection sensor | Paper present | Paper not present |
| PS31 | Staple Stacker Paper Detection | Staple stacker paper detection sensor | Paper present | Paper not present |

**(k) Sensor monitor 11 (FS-534/FS-534SD)**

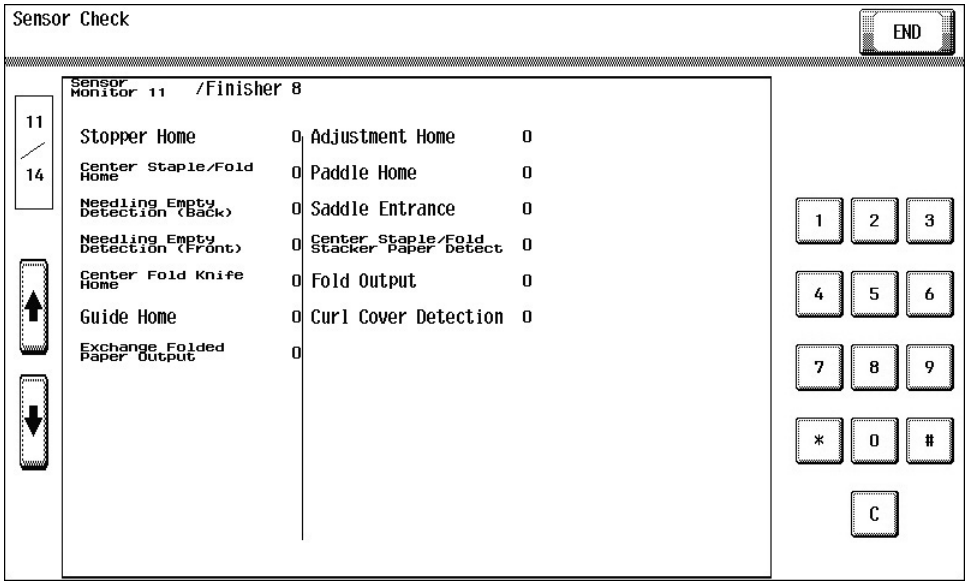


| Symbol | Panel display | Part/signal name | Operation characteristics/panel display | |
|---|---|---|---|---|
| | | | 1 | 0 |
| | Finisher 8 | | | |
| PS20 | Stopper Home | Trailing edge stopper home position detection sensor | At home | Not at home |
| PS9 | Center Staple/Fold Home | Center stapler /fold home sensor | At home | Not at home |
| PS15 | Needling Empty Detection (Back) | Staple empty detection sensor (Rear) | Staple not present | Staple present |
| PS16 | Needling Empty Detection (Front) | Staple empty detection sensor (Front) | Staple not present | Staple present |
| PS8 | Center Fold Knife Home | Center fold knife home sensor | At home | Not at home |
| PS7 | Guide Home | Guide home sensor | At home | Not at home |

| Symbol | Panel display | Part/signal name | Operation characteristics/panel display | |
|---|---|---|---|---|
| | | | 1 | 0 |
| PS30 | Exchange Folded Paper Output | Exchange folded paper output sensor | At home | Not at home |
| PS4 | Adjustment Home | Alignment home sensor | At home | Not at home |
| PS5 | Paddle Home | Paddle home sensor | At home | Not at home |
| PS1 | Saddle Entrance | SD entrance sensor | Paper present | Paper not present |
| PS3 | Center Staple/Fold Stacker Paper Detect | Center staple/fold stacker paper detect sensor | Paper present | Paper not present |
| PS12 | Fold Output | Fold exit sensor | Paper present | Paper not present |
| PS2 | Curl Cover Detection | Curl cover detection sensor | Not at home | At home |

**(I) Sensor monitor 12 (FS-533)**

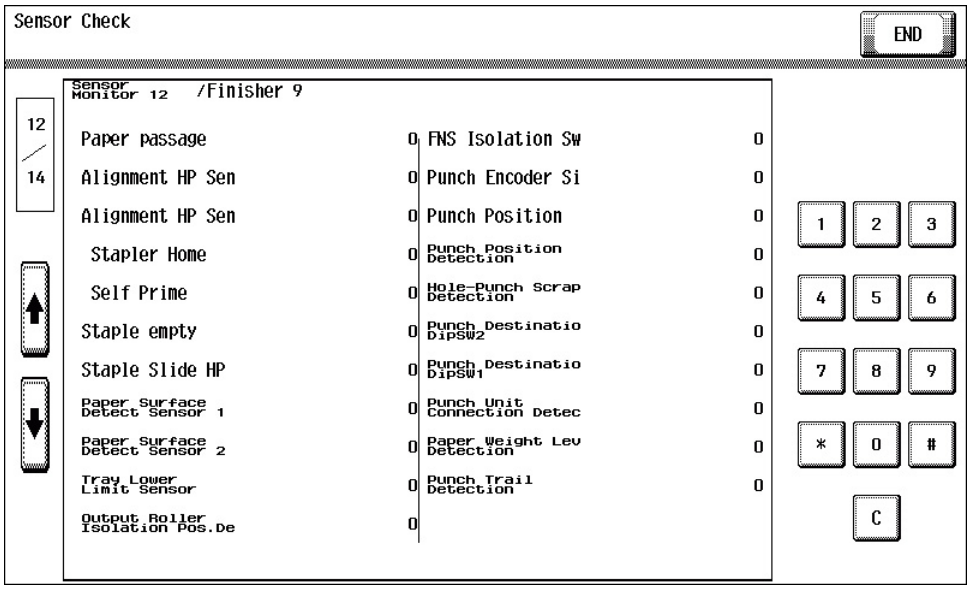


| Symbol | Panel display | Part/signal name | Operation characteristics/panel display | |
|---|---|---|---|---|
| | | | 1 | 0 |
| | Finisher 9 | | | |
| PS101 | Paper Passage | Paper feed sensor | Paper present | Paper not present |
| PS108 | Alignment HP Sensor (Front) | Alignment plate home sensor/F | At home | Not at home |
| PS109 | Alignment HP Sensor (Rear) | Alignment plate home sensor/R | At home | Not at home |
| PS110 | Stapler Home | Stapler home sensor | At home | Not at home |
| PS112 | Self Prime | Self prime sensor | Staple present | Staple not present |
| PS113 | Staple empty | Staple empty sensor | Staple not present | Staple present |
| PS111 | Staple Slide HP | Stapler home sensor | At home | Not at home |
| PS102 | Paper Surface Detect Sensor 1 | Paper surface detect sensor/1 | Paper present | Paper not present |
| PS104 | Paper Surface Detect Sensor 2 | Paper surface detect sensor/2 | Blocked | Unblocked |
| PS107 | Tray Lower Limit Sensor | Paper exit tray home sensor | At lower position | Not at lower position |
| PS105 | Output Roller Isolation Pos. Detect | Pick up roller position sensor | At home | Not at home |
| SW1 | FNS Isolation Switch | Finisher lock switch | Open | Closed |
| PS202 | Punch Encoder Signal | Punch motor sensor | Blocked | Unblocked |
| PS204 | Punch Position | Puncher home sensor | At home | Not at home |
| PS203 | Punch Position Detection | Puncher drive cam sensor | At home | Not at home |
| PS205 | Hole-Punch Scrap Detection | Punch dust full sensor | ON | OFF |
| - | Punch Destination DipSW2 | - | ON | OFF |
| - | Punch Destination DipSW1 | - | ON | OFF |

| Symbol | Panel display | Part/signal name | Operation characteristics/panel display | |
|---|---|---|---|---|
| | | | 1 | 0 |
| - | Punch Unit Connection Detection | - | Connected | Not connected |
| PS103 | Paper Weight Lever Detection | Paper weight lever sensor | Blocked | Unblocked |
| PS201 | Punch Trail Detection | Paper feed sensor | Paper present | Paper not present |

**(m) Sensor monitor 13**

- Not used

**(n) Sensor monitor 14 (Scanner section of the MFP)**

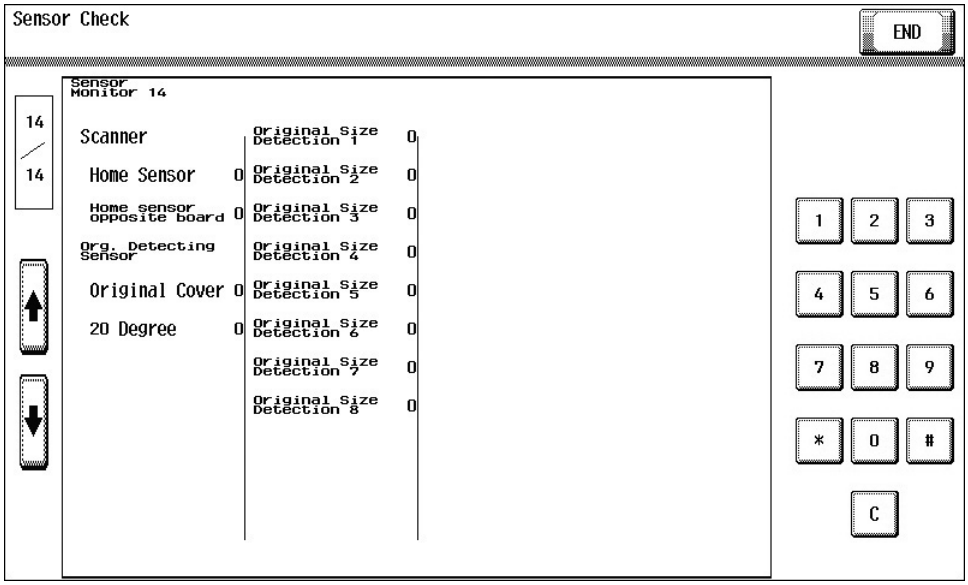


| Symbol | Panel display | Part/signal name | Operation characteristics/panel display | |
|---|---|---|---|---|
| | | | 1 | 0 |
| | Scanner | | | |
| PS201 | Home Sensor | Scanner home sensor | At home | Out of home |
| PS13/PS12 | Home sensor opposite board | Document reading glass cleaning sensor | At home | Out of home |
| | Org. Detecting Sensor | | | |
| RS201 | Original Cover | Original cover sensor | Lowered | Raised |
| PS202 | 20 Degree | Angle sensor | Less than 20 degree *1 | 20 degree or more *1 |
| PS204 | Original Size Detection 1 | Original size sensor/1 | Original loaded Not mounted | Original not loaded |
| PS205 | Original Size Detection 2 | Original size sensor/2 | Original loaded Not mounted | Original not loaded |
| - | Original Size Detection 3 | Not used | - | - |
| - | Original Size Detection 4 | Not used | - | - |
| - | Original Size Detection 5 | Not used | - | - |
| - | Original Size Detection 6 | Not used | - | - |
| - | Original Size Detection 7 | Not used | - | - |
| - | Original Size Detection 8 | Not used | - | - |

- *1: When DF-704/DF-629is mounted, machine detected the angle at 14.5 degrees.

### 5.19.2 Table Number

#### (1) Vdc-C Vg-C

**(a) Use**

- When IDC is detected, for plain paper, Thick 1/1+, Thick 2/3/4, and Black, the machine independently displays each Vg/Vdc output value that is calculated based on the density (toner amount stuck on the belt) of the test pattern created on the transfer belt.

- Reference values: C, M, Y, K Vdc: around 400 V, Vg: around 550 V
- Used for troubleshooting of image problems.

#### (b) Procedure

- If the value is high, correct so that the image density becomes low.
- If the value is low, correct so that the image density becomes high.

### (2) LD Light Value

#### (a) Use

- Shows the LD light value of each color of toner during print image formation.

### (3) Charging AC Output Value 1

#### (a) Use

- Shows the AC voltage value applied to the charging roller of each color of toner during print image formation.

### (4) Charging AC Output Value 2

#### (a) Use

- Shows the current value applied to the charging roller of each color of toner during print image formation.

## 5.19.3 Level History 1

### (1) Use

- To display TCR (T/C ratio), IDC/registration sensor output values, and fusing temperature.
- Used for troubleshooting of image problems.

### (2) Procedure

| | |
|---|---|
| TCR-C/-M/-Y/-K | Shows the T/C output reading taken last. |
| IDC1/IDC2 | Shows the latest IDC data. |
| Middle heat temperature | Not used |
| Medium Heating Temperature | Displays the latest detected temperature of the heating roller thermistor/2. |
| Heat edge temperature | Displays the latest detected temperature of the heating roller thermistor/1. |
| Main Heating Temperature | Displays the latest detected temperature of the heating roller temperature sensor. |

“Reading taken last” means

- Density of toner of the latest image.
- When a test pattern is produced by pressing the Start key while level history 1 is being displayed.

## 5.19.4 Level History 2

### (1) Use

- IDC Sensor (Transfer belt bare surface level) as adjusted through the image stabilization sequence and ATVC value.
- Used for troubleshooting of image problems.

### (2) Procedure

| | |
|---|---|
| IDC Sensor Adjust 1/2 | Shows the intensity adjustment value (0 to 255) of the IDC sensor.<br>The normal value is 35 to 110, but the value increases depending on how long the machine has been used. |
| ATVC -C/-M/-Y/-K | Shows the first image transfer nearest output value. (5 to 40 µA) |
| ATVC -2nd | Shows the second image transfer nearest output value. (0 to 4,800 V) |

## 5.19.5 Temp. & Humidity

### (1) Use

- Displays the temperature and humidity in the machine.
- Used as reference information when a malfunction occurs.

### (2) Procedure

| | |
|---|---|
| Temp-Inside | 0 to 80 °C in 1 °C increments |
| Humidity | 10 to 90 % in 1 % increments |
| Absolute Humidity | 0 to 255 in 1 increments |
| Paper temperature | 0 to 100 °C in 1 °C increments |

## 5.19.6 CCD Check

### (1) Use

- To display the D/A value of CCD clamp/gain for R, G, and B.
- To display the D/A value of CIS clamp/gain. (DF-704 only)
- Used for troubleshooting for the CCD sensor/CIS.

### (2) Procedure

- Use the following guidelines on the correct range of values.

#### (a) CCD

- CLAMP: The maximum value and the minimum value of the output value should be within the range shown below.

| Acceptable clamping rage | Minimum value | Maximum value |
|---|---|---|
| R | 600 | 1500 |
| G | 600 | 1700 |
| B | 600 | 1600 |

- GAIN: The maximum value and the minimum value of the output value should be within the range shown below.

| Acceptable gain range | Minimum value | Maximum value |
|---|---|---|
| R | 20 | 238 |
| G | 10 | 222 |
| B | 70 | 247 |

#### (b) CIS (Only when the optional DF-704 is mounted)

- CLAMP: -36 to +36 * Show the maximum value for controlling the black level of the CIS.
- GAIN: 70 to 255 * Show data themselves

## 5.19.7 Memory/Storage Adjustment

### (1) Memory Check

#### (a) Use

- If the copy image is faulty.
- To check correspondence of data written to and that read from memory through write/read check.
- The following shows the memory names that correspond to each memory where check is made.

| | |
|---|---|
| WORK0 | Standard memory (onboard) |
| WORK1 | Standard memory (DIMM) |
| FILE0, 1 | ASIC777 memory installed in the MFP board |
| FILE2, 3 | Memory of ASIC30 installed in the EIF board for IC-416 |
| FILE4, 5 | Memory of ASIC777 installed in the DS board (only when dual scan image processing board is mounted) |

<Rough Check>

- A check is made for each memory to see if the image data reading and writing are correctly made in a very limited area.
- The progress of the check sequence is displayed in percentage. (calculated based on all checks from WORK0 to FILE5 constituting 100%)
- When the rough checks of all memories are completed, results are displayed beside the memory display. (OK/NG)
  Rough check time: approx. 10 sec.

Typical rough check result display: Exemplary display when all memories have been checked okay

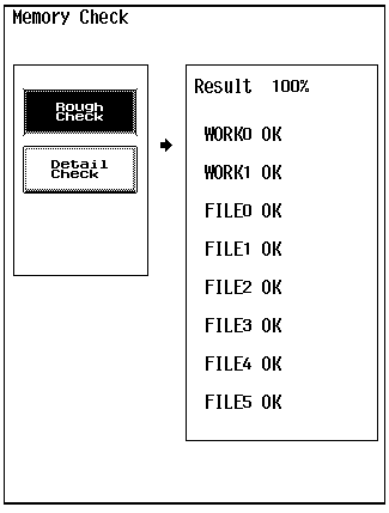


<Detail Check>

- A write check and a read check are repeated in all areas for each memory.
  **NOTE**
  - **For a write check, a specific write value is set and the specific value is written in all areas of the memory and the written data is thereafter read. This sequence is performed for all memories (from WORK0 to FILE5). (which forms one cycle of the check sequence)**
  - **When one cycle of the check sequence is completed, the write value is changed automatically and a new check cycle is performed. This sequence is repeated with the write value changed for each sequence.**
  - **Unlike the rough check, the detail check is not automatically terminated. The check cycle is repeated until the Stop key is pressed.**

- The progress of the check sequence is displayed in percentage. (calculated based on all checks from WORK0 to FILE5 constituting 100%)

**NOTE**
- **The check progress status display is 100% when one cycle of the check sequence is completed.**
- **The check progress status display is automatically reset to 0% and restarted as soon as a new check sequence is started.**

- The detail check of all memories (one cycle) is completed in about 3 min.
- The press of the Stop key will terminate the detail check.
- If a write/read error is detected, NG appears beside the memory display and the check sequence is automatically terminated.

#### (b) Rough check procedure

1. Call the Service Mode to the screen.
2. Touch [State Confirmation] -> [Memory/Storage Adjustment] -> [Memory Check].
3. Touch [Rough Check].
4. Press the Start key to start the check procedure.
   **NOTE**
   - **The rough check procedure can be interrupted by pressing the Stop key.**
5. The procedure is automatically completed (in about 10 sec.) and the results are shown on the screen.
6. If the check results for WORK0 to 1 are NG, check the memory for connection or replace the memory with a new one.
   If the check results for FILE0 to 1 are NG, replace the MFP board with a new one.
   If the check results for FILE2 to 3 are NG, replace the EIF board for IC-416 with a new one.
   If the check results for FILE4 to 5 are NG, replace the DS board with a new one. (only when DF-701 is mounted)

#### (c) Detail check procedure

1. Call the Service Mode to the screen.
2. Touch [State Confirmation] -> [Memory/Storage Adjustment] -> [Memory Bus Check].
3. Touch [Detail Check].
4. Press the Start key to start the detail check procedure.
   The check sequence is started and the current check progress status is displayed in percentage.
5. When the check progress status display is 100% after the start of the check sequence, the first check cycle is completed. (which takes about 3 min.)
   The results are displayed on the screen. (The sequence has been checked okay, if NG does not appear.)
   The current check progress status display is associated with the latest check sequence.
   **NOTE**
   - **If a write/read error is detected, NG appears beside the memory display and the check cycle is automatically terminated.**
6. Press the Stop key at any timing to terminate the detail check procedure.
7. If the check results for WORK0 to 1 are NG, check the memory for connection or replace the memory with a new one.
   If the check results for FILE0 to 1 are NG, replace the MFP board with a new one.
   If the check results for FILE2 to 3 are NG, replace the EIF board for IC-416 with a new one.
   If the check results for FILE4 to 5 are NG, replace the DS board with a new one. (only when DF-701 is mounted)

### (2) Compress / Decompression Check

#### (a) Use

- To check whether compression and decompression are carried out properly.
- If the copy image is faulty.

#### (b) Procedure

1. Call the Service Mode to the screen.
2. Touch [State Confirmation] -> [Memory/Storage Adjustment] -> [Compress/Decompression Check].
3. Press the Start key to start the check procedure.
4. The check result will be displayed.

### (3) Memory Bus Check

#### (a) Use

- To check to see if image data is correctly transferred from scanner to memory, and from memory to printer.
- Bus check between scanner and memory has two steps; the scanner internal check step as internal processing and the check step between scanner and memory. If either of the two steps is NG, NG1 or NG2 is displayed respectively.
- If the copy image is faulty.

#### (b) Procedure

1. Call the Service Mode to the screen.
2. Touch [State Confirmation] -> [Memory/Storage Adjustment] -> [Memory Bus Check].
3. Select either [Scanner -> Memory], [Memory -> PRT], or both.
4. Pressing the Start key will start the memory bus check and be terminated automatically.
5. The check result will be displayed, [OK] or [NG].

### (4) DSC Bus Check

#### (a) Use

- To check the connection between the DSC board and the scanner section when the optional security kit SC-508 is installed.
- When an error is detected after checking, NG1 or NG2 is displayed depending on the location of the board where the defect is found.

#### (b) Procedure

1. Call the Service Mode to the screen.
2. Touch [State Confirmation] -> [Memory/Storage Adjustment] -> [DSC Bus Check].
3. Select “Front side” or “Back side”, and touch [Scanner -> DSC].
   **NOTE**
   - **The DSC bus check for the back side can be performed only when DF-704 is mounted.**
4. Press the Start key to start the check procedure.
5. The check result will be displayed.

### (5) Storage R/W Check

#### (a) Use

- To check to see if the hard disk is connected properly, and if read/write operation of the hard disk is correctly performed.
- When the hard disk is mounted.

#### (b) Procedure

1. Call the Service Mode to the screen.
2. Touch [State Confirmation] -> [Memory/Storage Adjustment] -> [Storage R/W Check].
3. Press the Start key to start the check procedure.
4. When the check procedure is completed, the results are shown on the screen.

### (6) Format

#### (a) Use

- To format the hard disk.
- The function proceeds in the order of physical format to logical format.
- If the hard disk is yet to be formatted, the malfunction code “C-D010” will appear. Ignore this code and continue with the formatting procedure.
- Use when replacing the standard equipment hard disk. (Logical format)
  **NOTE**
  - **When replacing the hard disk during the mirroring operation (when the optional hard disk HD-524 is installed), it is necessary to execute [HDD Mirroring Rebuild]. Logical formatting is not required.**
- When the hard disk is to be initialized. (Physical format to logical format)

**NOTE**

- **As HDD formatting deletes Movie data, Voice data, OCR dictionary data, PDF/A font, and OCR font, and Unicode font you need to reinstall these data as necessary after using this function.**
- **When HDD formatting is executed with the HD-524 installed, both HDD (A) and HDD (B) are formatted. All data on the Slave is deleted.**
- **By using in conjunction with the security setting HDD Data Backup function, data can be restored to the HDD once it is formatted.**

#### (b) Procedure (Physical Format)

1. Call the Service Mode to the screen.
2. Touch [State Confirmation] -> [Memory/Storage Adjustment] -> [Format].
3. Touch [Physical Format].
4. Press the Start key to start the formatting sequence.
5. The sequence will be automatically terminated as it is completed.
6. Turn off the main power switch and turn it on again more than 10 seconds after.

**NOTE**

- **If [HDD Encryption Setting] is not set to “ON,” when the physical format is completed and the main power switch is turned OFF/ON, a message that prompts you to set an encrypting word is displayed.**
  **If you perform [HDD Encryption Setting], after setting an encrypting word, perform the logical format.**

#### (c) Procedure (Logical formatting (when initially setting up a standard replacement HDD))

1. Call the Service Mode to the screen.
2. Touch [State Confirmation] -> [Memory/Storage Adjustment] -> [Format].
3. Touch [Logical Format].
4. Press the Start key to start the formatting sequence.
5. The sequence will be automatically terminated as it is completed.
6. Turn off the main power switch and turn it on again more than 10 seconds after.

* Formatting the hard disk will erase all data contained in it.

### (7) eMMC -> HDD Data Copy

- Use prohibited

**NOTE**

- **The use of this function is prohibited.**
- **Executing this function automatically formats the HDD, erasing all data recorded on the HDD.**

### (8) HDD Mirroring Rebuild

#### (a) Use

- Displayed when the optional hard disk HD-524 is installed.
- Use when setting up the optional hard disk HD-524.

Copy data from the standard equipped hard disk to the additionally installed hard disk.
- Use when replacing a failed hard disk.
  Copy data from a normally operating hard disk to a replacement hard disk.

**NOTE**
- **The HDD mirroring rebuilding process takes approx. 1 hour.**

#### (b) Procedure

1. Install the second hard disk.
2. Turn ON the main power switch.
3. Call the Service Mode to the screen.
4. Select [State Confirmation] -> [Memory/Storage Adjustment] -> [HDD Mirroring Rebuild].
5. Press the Start key. Copy the entire data from the Master disk to the Slave disk.
   The Start key orange light turns ON, and the operation progress displays in the screen. (Processing time: approx. 1 hour)
   **NOTE**
   - **Never turn Off the main power supply or pull out the power plug during HDD mirroring rebuilding (below: rebuilding).**
   - **When rebuilding is executed, the process cannot be paused or forcibly quit until rebuilding is completed.**
   - **Jobs can still be executed even during rebuilding. However, it will take a longer time to complete the rebuilding.**
   - **To execute a job during rebuilding, touch the [OK] key twice, and exit Service Mode. Rebuilding will continue to run in the background.**
   - **Check the mirroring rebuilding progress by selecting [Service Mode] -> [State Confirmation] -> [Memory/Storage Adjustment].**
6. When the data has finished copying, the screen displays 100%, and the Start key light changes color to blue.
7. Touch [OK] twice, and exit Service Mode
8. Turn OFF the main power switch, wait for 10 sec., then turn the switch ON.

### 5.19.8 Memory/Storage Status

#### (1) Use

- To display the condition and amount of the memory and hard disk.
- Displays the hard disk operating state, Master disk designation, rebuilding state when the optional hard disk HD-524 is installed.

### 5.19.9 Color Regist

#### (1) Use

- To check each of C, M, and Y for color shift amount.
- The data is updated after a color shift correction has been made or color shift adjustment has been completed.
- To check when there is a color shift.
- To display the results of skew adjustment.

#### (2) Procedure

- For each of C, M, and Y, the color shift amount (in X and Y directions) at two locations (one at the front and the other in the rear) and the difference in color shift amount between the front and rear (X and Y directions) are displayed.
- Display unit: dots
- Individual color shifts of C, M, and Y are based on K and their amounts are displayed.
- For details of skew adjustment, see the "I.5.4.9 Print Head Skew Adj.".

### 5.19.10 Load Check

#### (1) Use

- To check each device (electric component) for proper condition by individually activating the load associated with the device.
- To identify faults at the time of troubleshooting.

**NOTE**
**Take note of the following during the load check mode.**
- **No malfunction is detected and no count is taken of consumables life and related items.**
- **Two or more devices (motors, clutches, solenoids, and fans) cannot be checked simultaneously.**
- **Detection of proper installation of various types of units and waste toner box does not function. During the check procedure, therefore, make sure that the unit in question is installed correctly or yet to be installed.**

#### (2) Procedure

1. Call the Service Mode to the screen.
2. Touch [State Confirmation] -> [Load Check].
3. Open the front door or the right door.
4. Touch [Start Load Check].
5. Close the door opened on step3.
6. Referring to the load check list, enter a check code.
7. Referring to the load check list, enter a multi code.
8. Press the Start key.
   When pressing the Start key, the specified load is activated. The Start key blinks in orange.
9. Check the load operation and output of signals.
10. Press the Stop key to stop the check operation and check the result.
    **NOTE**
    - **Depending on the type of load being activated, after the lapse of the specified time or after the transition to the specified state, the corresponding device automatically stops working.**
    - **When 'NG' is displayed, check the wiring and connectors.**

*11.* To check another load or signal output, repeat steps 6 to 10.
*12.* Turn OFF the main power switch and turn it ON again more than 10 seconds after.

**NOTE**

- **To exit from the load check mode, be sure to turn off and on the main power switch.**
  **At the point when you display [Service Mode] -> [State Confirmation] -> [Load Check], MFP enters into load check mode. Regardless of whether load check is actually performed or not, the main power switch must be turned off and on to exit from load check mode.**

### (3) Load check list

| Check code | Multi code | Symbol | Load name | Operation outline | Note |
|---|---|---|---|---|---|
| 8 | 1 | EL/Y, EL/M, EL/C | Erase LED /Y,M,C | Outputs erase LED.<br><At the time of start><br>Turns on erase LED/Y, M, C remote.<br>Turns on erase LED/K low light intensity remote.<br>Turns on erase LED/K.<br><At the time of stop><br>Turns off erase LED/Y, M, C remote.<br>Turns off erase LED/K low light intensity remote.<br>Turns off erase LED/K. | - |
| | 2 | EL/K | Erase LED /K | | - |
| 20 | 1 | CL3 | Tray1 paper feed clutch | Drives the specified clutch. | - |
| | 2 | CL1 | Tray2 paper feed clutch | | - |
| | 3 | CL7 | Bypass paper feed clutch | | - |
| 21 | 1 | CL2 | Tray2 vertical transport clutch | Drives the specified clutch. | - |
| | 2 | CL4 | Registration clutch | | - |
| 23 | 1 | - | Bypass tray lift-up plate elevator motor /down | Drives the transport motor in the specified direction. | The motor stops when the upper limit sensor or lower limit is detected. |
| | 3 | SD1 | Bypass pick-up solenoid | Turns ON the solenoid. | The solenoid will stop after a lapse of predetermined time. |
| | 4 | M12 | Tray1 lift-up motor | Starts the lift-up operation. | The motor stops when the upper limit sensor or lower limit is detected. |
| | 5 | M13 | Tray2 lift-up motor | | The motor stops when the upper limit sensor or lower limit is detected. |
| | 6 | M113 | Tray3 lift-up motor | | Only when PC-110 or PC-210 is mounted.<br>The motor stops when the upper limit sensor or lower limit is detected. |
| | 7 | M123 | Tray4 lift-up motor | | Only when PC-210 is mounted.<br>The motor stops when the upper limit sensor or lower limit is detected. |
| | 8 | M1 | LU lift-up motor | | Only when LU-302 is mounted. |
| | 9 | M134 | LCT elevator motor moving up | | Only when PC-410 is mounted.<br>The motor stops when the upper limit sensor or lower limit is detected. |
| | 10 | | LCT elevator motor moving down | | |
| | 11 | M133 | Shifter motor move to home position | Starts the shifter operation. | Only when PC-410 is mounted. |
| | 12 | | Shifter motor shift operation | | Only when PC-410 is mounted. |
| 24 | 1 | - | 1st transfer roller (Y,M,C) pressure | Starts the pressure/release operation of the 1st transfer roller.<br>**NOTE** | - |

| | | | | | |
|---|---|---|---|---|---|
| | 2 | - | 1st transfer roller release | **Be sure to perform the release operation whenever the pressure/release operation has been performed. *1** | |
| 28 | 1 | M131 | LCT paper feed motor high speed | Drives the motor at the specified speed. | Only when PC-410 is mounted. The paper lifting plate must not be at upper limit position. |
| | 2 | | LCT paper feed motor middle speed | | |
| | 3 | | LCT paper feed motor low speed | | |
| | 5 | M132 | LCT vertical transport motor high speed | | Only when PC-410 is mounted. |
| | 6 | | LCT vertical transport motor middle speed | | |
| | 7 | | LCT vertical transport motor low speed | | |
| | 9 | M111 | Tray3 paper feed motor high speed | | Only when PC-110 or PC-210 is mounted. The paper lifting plate must not be at upper limit position. |
| | 10 | | Tray3 paper feed motor middle speed | | |
| | 11 | | Tray3 paper feed motor low speed | | |
| | 13 | M121 | Tray4 paper feed motor high speed | | Only when PC-210 is mounted. The paper lifting plate must not be at upper limit position. |
| | 14 | | Tray4 paper feed motor middle speed | | |
| | 15 | | Tray4 paper feed motor low speed | | |
| | 17 | M112 | Tray3 vertical transport motor high speed | | Only when PC-110 or PC-210 is mounted. |
| | 18 | | Tray3 vertical transport motor middle speed | | |
| | 19 | | Tray3 vertical transport motor low speed | | |
| | 21 | M122 | Tray4 vertical transport motor high speed | | Only when PC-210 is mounted. |
| | 22 | | Tray3 vertical transport motor middle speed | | |
| | 23 | | Tray4 vertical transport motor low speed | | |
| | 101 | - | Tray1 paper feed roller drive | The transport motor and Tray1 paper feed clutch are driven. | The paper lifting plate of the tray 1 must not be at upper limit position. |
| | 105 | - | Tray2 paper feed roller drive | The transport motor and Tray2 paper feed clutch are driven. | The paper lifting plate of the tray 2 must not be at upper limit position. |
| | 109 | - | Tray3 paper feed roller drive high speed | - | The paper lifting plate of the tray 3 must not be at upper limit position. |
| | 110 | | Tray3 paper feed roller drive middle speed | | |
| | 111 | | Tray3 paper feed roller drive low speed | | |
| | 113 | - | Tray4 paper feed roller drive high speed | - | The paper lifting plate of the tray 4 must not be at upper limit position. |
| | 114 | | Tray4 paper feed roller drive middle speed | | |
| | 115 | | Tray4 paper feed roller drive low speed | | |
| | 117 | - | Manual bypass paper feed roller drive | The transport motor and manual bypass paper feed clutch are driven. | - |
| 32 | 1 | M14 | Polygon motor high speed | Drives the motor at the specified speed. Drives the power supply cooling fan at the same timing. | - |
| | 2 | | Polygon motor middle speed | | - |
| | 3 | | Polygon motor low speed | | - |
| 40 | 1 | M1 | Transport motor high speed | Drives the motor at the specified speed. **NOTE** | - |
| | 2 | | Transport motor middle speed | | |
| | 3 | | Transport motor low speed | | |

| | | | | | |
|---|---|---|---|---|---|
| | 4 | | Transport motor minimum speed | **Perform the operation check after the drum unit/K and the transfer belt unit have been removed. *2** | |
| 41 | 1 | M2 | PC motor high speed | Drives the motor at the specified speed.<br>**NOTE**<br>**Perform the operation check after the drum units/Y,M,C have been removed. *3** | - |
| | 2 | | PC motor middle speed | | |
| | 3 | | PC motor low speed | | |
| | 4 | | PC motor minimum speed | | |
| 42 | 1 | FM1 | Power supply cooling fan | Drives the specified fan. | - |
| | 2 | FM2 | Transfer belt cleaner cooling fan | | - |
| | 3 | FM4 | Toner cartridge cooling fan | | - |
| | 4 | FM8 | Exit cooling fan | | - |
| | 4 | FM14 | Exhaust fan/1 | | Only when CU-101 is mounted. |
| | 4 | FM15 | Exhaust fan/2 | | Only when CU-101 is mounted. |
| | 4 | FM16 | Suction fan | | Only when CU-101 is mounted. |
| 45 | 1 | M3 | Fusing motor high speed | Drives the motor at the specified speed. | - |
| | 2 | | Fusing motor middle speed | | - |
| | 3 | | Fusing motor low speed | | - |
| | 4 | | Fusing motor minimum speed | | - |
| | 5 | | Fusing motor standby speed | | - |
| | 6 | M11 | Fusing pressure motor drive (pressure) | Starts the pressure/release operation of the pressure roller.<br>**NOTE**<br>**Be sure to perform the release operation whenever the pressure/release operation has been performed. *4** | - |
| | 7 | | Fusing pressure motor drive (release) | | |
| 50 | 1 | M21 | Developing motor high speed | Drives the motor at the specified speed.<br>**NOTE**<br>**Perform the operation check after the drum units/Y,M,C and the developing units/Y,M,C have been removed. *5** | - |
| | 2 | | Developing motor middle speed | | |
| | 3 | | Developing motor low speed | | |
| | 4 | | Developing motor minimum speed | | |
| 60 | 1 | M2 | Original feed motor : Speed 1/ normal rotation | • Drives the motor at the specified speed.<br>• Stop rotating when pressing the Stop key. | DF-629/DF-704 |
| | 2 | | Original feed motor: Speed 2/ normal rotation | | DF-629/DF-704 |
| | 3 | | Original feed motor: Speed 3/ normal rotation | | DF-629/DF-704 |
| | 5 | | Original feed motor: Speed 1/ reverse rotation | | DF-629/DF-704 |
| | 17 | M3 | Registration motor: Speed 1/ normal rotation | • Drives the motor at the specified speed.<br>• Stop rotating when pressing the Stop key. | DF-629/DF-704 |
| | 18 | | Registration motor: Speed 2/ normal rotation | | DF-629/DF-704 |
| | 19 | | Registration motor: Speed 3/ normal rotation | | DF-629/DF-704 |
| | 20 | | Registration motor: Speed 4/ normal rotation | | DF-629/DF-704 |
| | 33 | M1 | Original reading motor: Speed 1/normal rotation | • Drives the motor at the specified speed.<br>• Stop rotating when pressing the Stop key. | DF-629 |
| | 34 | | Original reading motor: Speed 2/normal rotation | | DF-629/DF-704 |
| | 35 | | Original reading motor: Speed 3/normal rotation | | DF-629/DF-704 |
| | 36 | | Original reading motor: Speed 4/normal rotation | | DF-629 |
| | 37 | | Original reading motor: Speed 5/normal rotation | | DF-629/DF-704 |
| | 38 | | Original reading motor: Speed 1/reverse rotation | | DF-629 |
| | 39 | | Original reading motor: Speed 2/reverse rotation | | DF-629 |
| | 65 | M4(DF-629)/ | Normal rotation | Drives the glass cleaning motor/original reading glass cleaning motor. | DF-629/DF-704 |
| | 66 | | Reverse rotation | | DF-629/DF-704 |

| | | | | | |
|---|---|---|---|---|---|
| | 67 | M6(DF-704) | High-speed sweeping | | DF-629/DF-704 |
| | 81 | M5(DF-629)/ M4(DF-704) | Pressure | Pressure/release the reading roll. | DF-629/DF-704 |
| | 82 | | Release | | DF-629/DF-704 |
| | 113 | FM1 | Full speed | • Drives the DF cooling fan motor/DF cooling fan motor.<br>• Stop rotating when pressing the Stop key. | DF-629/DF-704 |
| | 129 | SD2(DF-629)/ SD1(DF-704) | Stamp solenoid | Turns ON the solenoid. | DF-629/DF-704 |
| | 130 | SD1 | Exit solenoid | Turns ON the solenoid. | DF-629 |
| | 769 | M5 | Facing plate home detection operation | Drives the CIS cleaning motor. | DF-704 |
| | 770 | | Facing plate brush return operation | | DF-704 |
| | 771 | | Facing plate high-speed rotation operation | | DF-704 |
| | 785 | - | Rear panel lamp turns ON | Turns OFF after 60 seconds or by pressing the Stop key. | DF-704 |
| 81 | 0 | CL6 | ADU transport clutch | Drives the specified clutch. | - |
| 83 | 0 | SD3 | Gate switch solenoid | Turns ON the solenoid. | The solenoid will stop after a lapse of predetermined time. |
| 84 | 1 | M4 | Reverse motor high speed (Normal rotation) | Drives the motor at the specified speed and direction. | - |
| | 2 | | Reverse motor middle speed (Normal rotation) | | |
| | 3 | | Reverse motor low speed (Normal rotation) | | - |
| | 4 | | Reverse motor minimum speed (Normal rotation) | | - |
| | 5 | | Reverse motor high speed (Reverse rotation) | | - |
| | 6 | | Reverse motor middle speed (Reverse rotation) | | - |
| | 7 | | Reverse motor low speed (Reverse rotation) | | - |
| 85 | 1 | M5 | ADU transport motor high speed | Drives the motor at the specified speed. | - |
| | 2 | | ADU transport motor middle speed | | - |
| | 3 | | ADU transport motor low speed | | - |

**NOTE**

- ***1: If the PC motor is energized with the 1st transfer roller in its pressed position, the transfer belt and the photoconductor drum may be damaged.**
- ***2: The cleaning blades of the drum unit/K and the transfer belt unit, if driven with no toner deposited, may be curved to warp.**
- ***3: The cleaning blades of the drum unit/Y,M,C, if driven with no toner deposited, may be curved to warp.**
- ***4: The pressure roller, if left to stand in the pressed position, may be deformed.**
  **The drive gear may be damaged if the fusing unit is removed with the pressure roller in the pressed position.**
- ***5: If the machine is driven with the specified units left mounted on it, the developing roller and developer contact the photoconductor drum to damage it.**
  **If the machine is driven with the developing units/Y,M,C left mounted on it, the developing roller, which is yet to be charged, is driven, so that toner may scatter around.**

### 5.19.11 Adjustment Data List

#### (1) Use

- To display the adjustment and setting value set in the main body.

### 5.19.12 Self-diagnostic

- Conducts diagnosis for the defective and replaced areas of memory and various boards in main body when a trouble code is output or a trouble such as main body activation failure occurs, and displays a suspected defective part or connection between the specific board and main body board.

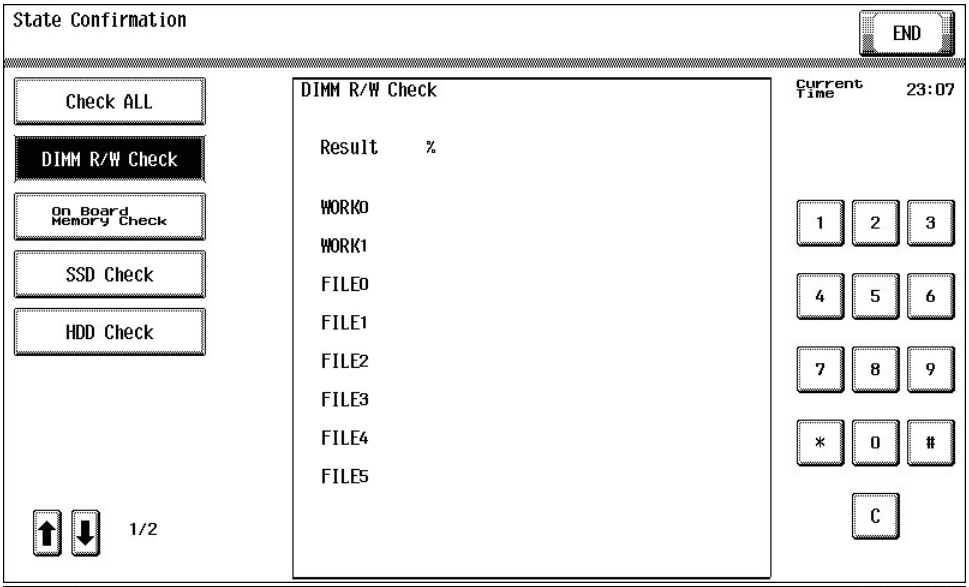


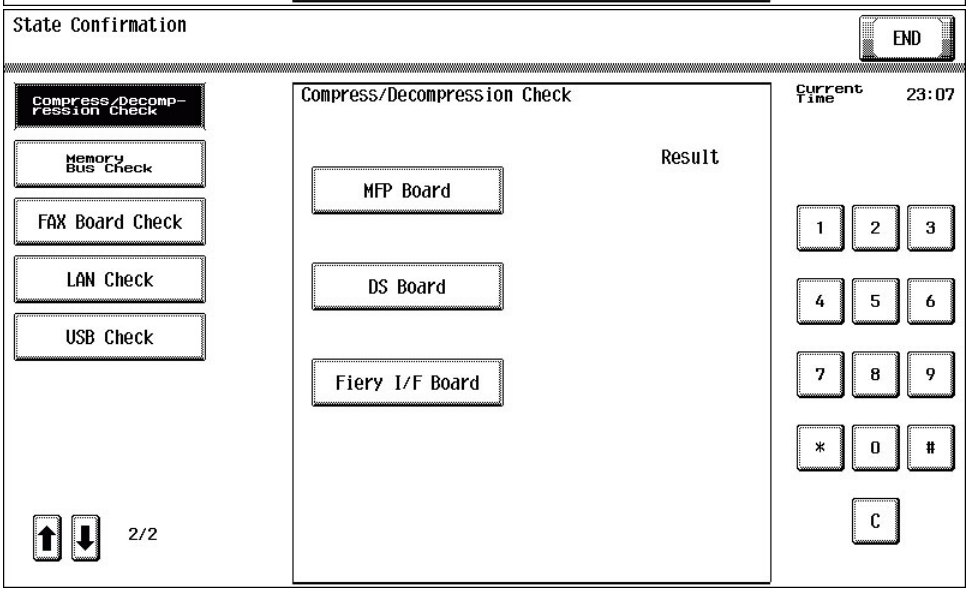


### (1) Check All

- Diagnoses DIMM R/W, On Board Memory, eMMC board, and HDD collectively, and specifies the cause of trouble.
- The following table shows the check method and countermeasures.

| Check mode | Check details | Corruption details | Next Action |
|---|---|---|---|
| DIMM R/W Check | • Execute Read/Write Check for DIMM on the MFP board.<br>• Execute the same check as [Rough Check] under [Memory/Storage Adjustment] -> [Memory Check]. | • MFP board DIMM (WORK0: standard memory, WORK1: additional memory)<br>• Corruption of CPU | • Reseat DIMM.<br>• Replace MFP board |
| On Board Memory Check | | | |
| R/W Check | Execute Read/Write Check for On Board Memory on the MFP board. | • Corruption of On Board Memory (SPI-Flash) on the MFP board<br>• Corruption of battery | MFP board |
| Pattern Check | Execute Read Check for the pattern ready written in the area secured in On Board Memory on the MFP board for Read. | • The pattern data for test cannot be read because the pattern data for test has been rewritten, or a contact failure of the electrical parts occurred.<br>• The correct information cannot be read because the data in the area for Read has been modified due to software failure, or a failure of the electrical parts occurred. | • Data in on board memory are exactly cleared (as a new one).<br>• MFP board |
| SSD Check<br>Note: The main unit is equipped with the eMMC board, not an SSD board. | | | |

| Check mode | Check details | Corruption details | Next Action |
|---|---|---|---|
| R/W Check | Execute Read/Write for the eMMC board | • Connection failure of the SATAI/F connector of the eMMC board<br>• Corruption of the eMMC device<br>• Corruption of MFP board | • Replace eMMC board<br>• Replace MFP board |
| Pattern Check*1 | Execute Read Check for the pattern ready written in the area secured in the eMMC. | • The pattern data for test cannot be read because the pattern data for test has been rewritten, or a contact failure of the electrical parts occurred.<br>• The correct information cannot be read because the data in the area for Read has been modified due to software failure, or a failure of the electrical parts occurred. | • Replace eMMC board |
| HDD Check | | | |
| R/W Check | Execute Read/Write for HDD. | • HDD cable failure<br>• HDD failure<br>• MFP board failure | • Replace the HDD cable.<br>• Replace HDD.<br>• Replace MFP board |
| Self-diagnostic (I/F Check) | Check whether the communications between HDD and MFP are normal. | Evaluate OK if there is any response returned from HDD, and NG if there is no response. | Check the HDD cable connection. |
| Self-diagnostic (Memory Check) | Execute the buffer test and the media test.<br>• Buffer test<br>Execute Read/Write Test for the buffer memory of HDD. Transfer the data by DMA to check whether the buffer memory works normally.<br>• Media test<br>Execute Read/Write Test for the disks of HDD. Check whether the disks, motor, and head works normally. Use the reserved area for the test. | Retrieve the test log, and display existence of error. | Replace HDD. |
| Compress/Decompression Check | | | |
| MFP Board | Execute the compression/extension test for the MFP board. | Corruption of the compressed/ extended circuits or memory of MFP. | Replace MFP board |
| DS Board | Execute the compression/extension test for the DS board. | Corruption of the compressed/ extended circuits or memory of MFP board. | • Remove and insert the DS board.<br>• Replace the DS board. |
| Fiery I/F Board | Execute the compression/extension test for the fiery I/F board. | • Connection failure of the fiery I/F board connector.<br>• Corruption of the compressed/ extended circuits or memory of fiery I/F board. | • Remove and insert the fiery I/F board.<br>• Replace the fiery I/F board. |
| Memory Bus Check | | | |
| Output Image Bus Check | Execute the input image bus test for the MFP board. | Corruption of the input image circuit or image bus of MFP board. | Replace MFP board |

**NOTE**

- **It takes approx. two minutes for check if all items are OK.**
- **When NG is detected, check operation may stop in the item detected NG. (Not allow moving to the following item)**
  **When the check operation is stopped five minutes or more in a specific item, certain trouble may occur in the item stopped. In this case, turn the main power switch OFF for stopping the self diagnosis. After that, investigate the items on which the check function is disabled and take countermeasures.**
- ***1 When the eMMC board is replaced even once, and the device conducts a self diagnosis, the pattern check may result in error, but this may be ignored.**

### (a) Procedure (from SERVICE MODE menu)

1. Call the Service Mode to the screen.
2. Touch [State Confirmation] -> [Self-diagnostic] -> [Check All].
3. Press the Start key to start the check procedure.
4. When the check procedure is completed, the results are shown on the screen.
   If the check results are NG, take measures upon confirmation of the corruption details mentioned above and Next action.

* Press the Stop key to interrupt the check sequence.

### (b) Procedure (from main power switch ON)

1. Open the front door.
2. Turn the main power switch on while pressing the power key.
   After a short beep sound is made once, release the power key and close the front door.
   Wait to display the self diagnosis (full check) screen.
3. After displaying the self diagnosis screen, press the start key.
   The self diagnosis (full check) is started.

The result of the diagnosis is displayed for every item. (OK/NG)
4. After finished the diagnosis for all items, turn the main power switch off.
5. If there is an item displayed NG, investigate the NG item and take countermeasures.

### (2) DIMM R/W Check

- Execute the following procedure for individual diagnosis. For details, see "I.12.18.12.(1) Check All".

#### (a) Procedure

1. Call the Service Mode to the screen.
2. Touch [State Confirmation] -> [Self-diagnostic] -> [DIMM R/W Check].
3. Press the Start key to start the check procedure.
4. When the check procedure is completed, the results are shown on the screen.

### (3) On Board Memory Check

- Execute the following procedure for individual diagnosis. For details, see "I.12.18.12.(1) Check All".

1. Call the Service Mode to the screen.
2. Touch [State Confirmation] -> [Self-diagnostic] -> [On Board Memory Check].
3. Select the item you would like to check.
4. Press the Start key to start the check procedure.
5. When the check procedure is completed, the results are shown on the screen.

### (4) SSD Check

- Execute the following procedure for individual diagnosis. For details, see "I.12.18.12.(1) Check All".

#### (a) Procedure

1. Call the Service Mode to the screen.
2. Touch [State Confirmation] -> [Self-diagnostic] -> [SSD Check].
3. Select the item you would like to check.
4. Press the Start key to start the check procedure.
5. When the check procedure is completed, the results are shown on the screen.

### (5) HDD Check

- Execute the following procedure for individual diagnosis. For details, see "I.12.18.12.(1) Check All".

#### (a) Procedure

1. Call the Service Mode to the screen.
2. Touch [State Confirmation] -> [Self-diagnostic] -> [HDD Check].
3. Select the item you would like to check.
4. Press the Start key to start the check procedure.
5. When the check procedure is completed, the results are shown on the screen.

### (6) Compress/Decompression Check

- Execute the following procedure for individual diagnosis. For details, see "I.12.18.12.(1) Check All".

#### (a) Procedure

1. Call the Service Mode to the screen.
2. Touch [State Confirmation] -> [Self-diagnostic] -> [Compress/Decompression Check].
3. Select the item you would like to check.
4. Press the Start key to start the check procedure.
5. When the check procedure is completed, the results are shown on the screen.

### (7) Memory Bus Check

- Execute the following procedure for individual diagnosis. For details, see "I.12.18.12.(1) Check All".

#### (a) Procedure

1. Call the Service Mode to the screen.
2. Touch [State Confirmation] -> [Self-diagnostic] -> [Memory Bus Check].
3. Select the item you would like to check.
4. Press the Start key to start the check procedure.
5. When the check procedure is completed, the results are shown on the screen.

### (8) FAX Board Check

- If the FAX board is installed, execute the FAX board test and the data transmission sound test.
- The following table shows the check method and countermeasures.

| Check details | Corruption details | Next Action |
|---|---|---|

| | | |
|---|---|---|
| • Execute the FAX board test.<br>• Execute the data transmission sound test. | • Connection failure of the cables connected to the FAX board<br>• Failure of the FAX board | • Replace the FAX signal cable.<br>• Replace the FAX power supply cable.<br>• Replace the FAX board.<br>• Replace the MFP board. |

#### (a) Procedure

1. Call the Service Mode to the screen.
2. Touch [State Confirmation] -> [Self-diagnostic] -> [FAX Board Check].
3. Select the line that you want to check from [Signal Send Test], [Signal Receive Test], or [NCU Test]. For the details of each item, refer to "Fax Test".
4. Select a test item.
5. Select the parameter you would like to test.
6. Press the Start key to start the check procedure.

### (9) LAN check

- Execute the Ping test.

#### (a) Procedure

1. Call the Service Mode to the screen.
2. Touch [State Confirmation] -> [Self-diagnostic] -> [LAN Check].
3. Input IP address of destination with the numeric keypad.
4. Press the Start key to start the check procedure.
5. When the check procedure is completed, the results are shown on the screen.
6. In case of NG result
   - The network set defect -> Make sure the network of the unit.
   - Corruption of the LAN connector of the MFP board -> Replace the MFP board
   - Connection failure of the LAN cable due to breakage of the claw -> Replace the LAN cable.

### (10) USB check

- Execute the test to check whether the USB board operates normally.

#### (a) Procedure

1. Call the Service Mode to the screen.
2. Touch [State Confirmation] -> [Self-diagnostic] -> [USB Check].
3. Press the Start key to start the check procedure.
4. When the check procedure is completed, the results are shown on the screen (NG is displayed if no USB device is installed).
5. In case of NG result
   - Connection failure of the USB connector of the MFP board -> Replace the MFP board.
   - Replace each USB device (authentication device, etc.).

## 5.20 Test Mode

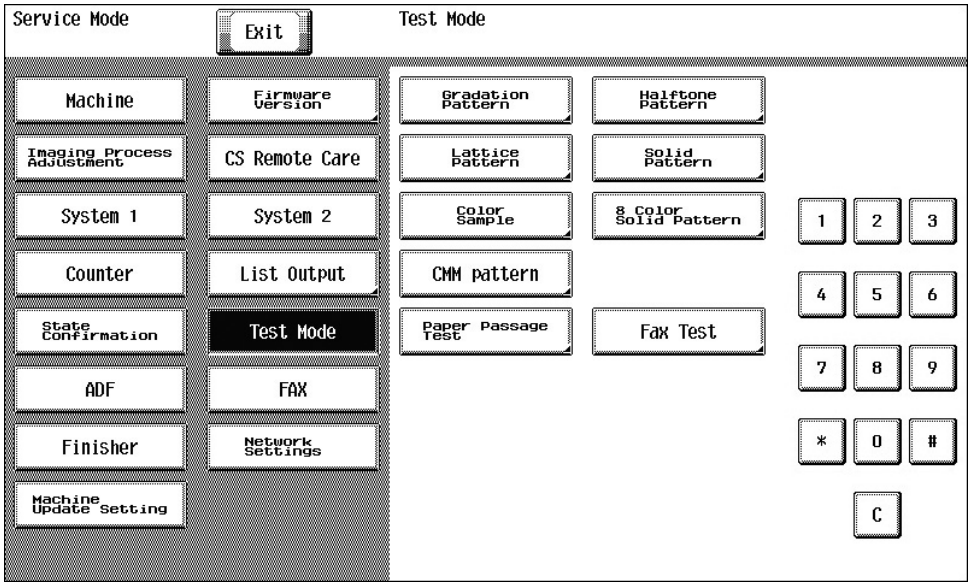


- To check the image on the printer side by letting the machine produce various types of test pattern. It also tests the printing operation in paper passage test, as well as the fax transmission.
- The machine searches through the paper sources in the order of tray 2, tray 3, tray 4, and tray 1 for paper of the maximum size for printing.

### 5.20.1 Procedure for test pattern output

1. Touch [Test Mode] to display the test mode menu.
2. Touch the desired test pattern key.

*3.* Set up the desired functions and press the Start key.

### 5.20.2 Gradation Pattern

#### (1) Use

- To produce a gradation pattern.
- Used for checking gradation reproducibility.

#### (a) Test pattern

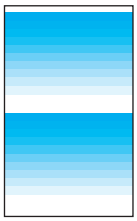

e.g.
- SINGLE
- HYPER
- Gradation
- Cyan

#### (2) Procedure

- Copies (“1” to 999)
- Select “SINGLE” (single copy) or MULTI (multi copy).
- Select FEET or “HYPER.”
- Select “1-Sided”, 2-Side1 or 2-Side2.
  - 2-Side1: The same pattern is printed on both front and back sides.
  - 2-Side2: The front side is blank and the pattern is printed on the back side.
- Select “Gradation”, Resolution or Error diffusion if HYPER has been selected.
- Select “12 Gradations”, 24 Gradations or 256 Gradations.
- Select the color mode. “Cyan”, Magenta, Yellow, Black (4PC), CMYK, 8Color, 4Color, Black (1PC)

**NOTE**
- **When 24 Gradations or 256 Gradations is selected, [8 Color] or [4 Color] is not selectable in color mode.**

### 5.20.3 Halftone Pattern

#### (1) Use

- To produce a solid halftone pattern.
- Used for checking uneven density and pitch noise.

#### (a) Test pattern

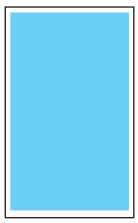

e.g.
- SINGLE
- HYPER
- Gradation
- Cyan
- Density: 128

#### (2) Procedure

- Copies (“1” to 999)
- Select “SINGLE” (single copy) or MULTI (multi copy).
- Select FEET or “HYPER.”
- Select “Gradation”, Resolution or Error diffusion if HYPER has been selected.
- Select “1-Sided”, 2-Side1 or 2-Side2.
  - 2-Side1: The same pattern is printed on both front and back sides.
  - 2-Side2: The front side is blank and the pattern is printed on the back side.
- Select the color mode. Cyan”, Magenta, Yellow, Black (4PC), Red, Green, Blue, CMYK, 3 Color, 4 Color, Black (1PC), MIX
- Select a printable area from [Full Bleed] or [Front Half].

  **NOTE**
  - **[Front Half] is selectable only for one-side printing.**

- Type the density level. (0 to “255”)

### 5.20.4 Lattice Pattern

#### (1) Use

- To produce a lattice pattern.
- Used for checking fine line reproducibility and uneven density.
- A reverse pattern is also used to check for fine line reproducibility of white letters on a solid background.

#### (a) Test pattern

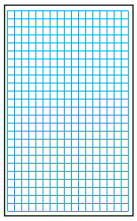

e.g.

- SINGLE
- FEET
- Cyan
- CD Width: 5
- FD Width: 5
- Density: 255
- Normal

#### (2) Procedure

- Copies (“1” to 999)
- Select “SINGLE” (single copy) or MULTI (multi copy).
- Select “FEET” or HYPER.
- Select “Gradation”, Resolution or Error diffusion if HYPER has been selected.
- Select “1-Sided”, 2-Side1 or 2-Side2.
  - 2-Side1: The same pattern is printed on both front and back sides.
  - 2-Side2: The front side is blank and the pattern is printed on the back side.
- Select the color mode. Cyan”, Magenta, Yellow, Black (4PC), Red, Green, Blue, CMYK, 3 Color, 4 Color, Black (1PC)
- Enter CD width and FD width. (0 to 191 dots)
- Type the density level. (0 to “255”)
- Select “Normal” or Reverse.
- Select “600 dpil” or 1200 dpi.

### 5.20.5 Solid Pattern

#### (1) Use

- To produce each of the C, M, Y, and K solid patterns.
- Used for checking reproducibility of image density.

#### (a) Test pattern

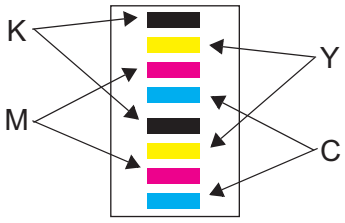


e.g.

- SINGLE
- HYPER
- Gradation
- Density: 255

#### (2) Procedure

- Copies (“1” to 999)
- Select “SINGLE” (single copy) or MULTI (multi copy).
- Select FEET or “HYPER.”
- Select “Gradation”, Resolution or Error diffusion if HYPER has been selected.
- Type the density level. (0 to “255”)

### 5.20.6 Color Sample

#### (1) Use

- To produce a color sample.
- Used for checking reproducibility of each of the different colors.

#### (a) Test pattern

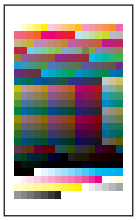

e.g.
- SINGLE
- HYPER
- Gradation

#### (2) Procedure

- Copies (“1” to 999)
- Select “SINGLE” (single copy) or MULTI (multi copy).
- “HYPER” is automatically selected.
- Select “Gradation”, Resolution or Error diffusion if HYPER has been selected.
- Produce 12-gradation-level patches of C, M, Y, K, R, G, and B, and a patch of each of the 12 reference colors in the hue circle with lightness and saturation corrected.

### 5.20.7 8 Color Solid Pattern

#### (1) Use

- To produce an 8-color solid pattern.
- Used for checking color reproducibility and uneven density of each color.

#### (a) Test pattern

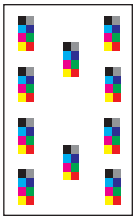

e.g.
- SINGLE
- HYPER
- Gradation
- Density: 255

#### (2) Procedure

- Copies (“1” to 999)
- Select “SINGLE” (single copy) or MULTI (multi copy).
- Select FEET or “HYPER.”
- Select “Gradation”, Resolution or Error diffusion if HYPER has been selected.
- Type the density level. (0 to “255”)

### 5.20.8 CMM pattern

#### (1) Use

- To produce a CMM (Color Management Module) pattern.
- Used to check color difference depending on the places where output is made.

#### (a) Test pattern

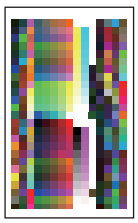

e.g.
- Error diffusion
- 270 Degree

#### (2) Procedure

- Copies is always “1”.

- Select "Error diffusion", Gradation or Resolution.
- Select an angle from among “0 degrees”, 90 degrees, 180 degrees, and 270 degrees.

### 5.20.9 Paper Passage Test

#### (1) Use

- To test the printing operation in paper passage test.
- Use to check the printing operation in paper passage test from each paper source.

#### (2) Procedure

1. Call the Service Mode to the screen.
2. Touch [Test Mode] -> [Paper Passage Test].
3. Select either [Yes] or [No] for the pattern print option.
4. Touch [Select Tray] and select the paper feed tray to be tested.
5. Touch [Paper Type] and select a paper type.
6. Press the Start key to start the paper passage test.
7. Pressing the Stop key will stop operation.

### 5.20.10 Fax Test-Signal Send Test

- It will be displayed only when the optional FAX kit FK-514 is mounted.
- Specifiable for each line when there are multiple fax lines

#### (1) Use

- Image information signals, control signals and DTMF can be individually output.
- Signal sounds are monitored by the monitor speaker.

#### (2) Procedure

1. Call the Service Mode to the screen.
2. Select -> [Test Mode] -> [FAX Test] -> [Fax Line Test].
3. Select a line, and touch the [Signal Send Test].
4. Select a test item.
5. Select the parameter you would like to test.
6. Press the [Start] key. (In order to move to another test, select the next test item after pressing the [Stop] key.)

NOTICE

- Signal is output from pressing [Start] to pressing [Stop].
- To check Line 1, [Administrator Settings] -> [Fax Settings] -> [Line Parameter Setting] -> [Line Monitor Sound] should be set to “ON”.
- To check Line 2, [Administrator Settings] -> [Fax Settings] -> [Multi Line Settings] -> [Line Parameter Setting] -> [Line Monitor Sound] should be set to “ON”.

#### (a) V34 Main CH: Default setting

- 33600

#### (b) V34 Main CH: Setting range

- 2400 to 33600 (step: 2400)

#### (c) V8: Default setting

- CM

#### (d) V17: Default setting

- 14400bps

#### (e) V17: Setting item

- 14400bps
- 12000bps
- 9600bps
- 7200bps

#### (f) V29: Default setting

- 9600bps

#### (g) V29: Setting item

- 9600bps
- 7200bps

#### (h) V27ter: Default setting

- 4800bps

#### (i) V27ter: Setting item

- 4800bps

- 2400bps

**(j) V21**

- No parameters

**(k) PB: Default setting**

- 0

**(l) PB: Setting item**

- 0 to 9, *, #, A, B, C, D

**(m) DP: Default setting**

- 0

**(n) DP: Setting range**

- 0 to 9

**(o) Special Tone: Default setting**

- 1100Hz

**(p) Special Tone: Setting item**

- 1100Hz
- 1300Hz
- 1650Hz
- 2100Hz

**(q) Optional Tone: Default setting**

- 200Hz

**(r) Optional Tone: Setting range**

- 200 to 4000Hz (step: 100Hz)

**(s) PB Tone (High): Default setting**

- 1209Hz

**(t) PB Tone (High): Setting item**

- 1209Hz
- 1336Hz
- 1477Hz
- 1633Hz

**(u) PB Tone (Low): Default setting**

- 697Hz

**(v) PB Tone (Low): Setting item**

- 697Hz
- 770Hz
- 852Hz
- 941Hz

**(w) Pseudo Ring**

- No parameters

### 5.20.11 Fax Test-Signal Receive Test

- It will be displayed only when the optional FAX kit FK-514 is mounted.
- Specifiable for each line when there are multiple fax lines

**(1) Use**

- Check a signaling tone by connecting the machine to the line to output a test signal of the fax board.
- Signal sounds are monitored by the monitor speaker.

**(2) Procedure**

1. Call the Service Mode to the screen.
2. Select -> [Test Mode] -> [FAX Test] -> [Fax Line Test].
3. Select a line, and touch the [Signal Receive Test].
4. Select a test item.
5. Select the parameter you would like to test.
6. Press the [Start] key. (In order to move to another test, select the next test item after pressing the [Stop] key.)

NOTICE
- Signal is output from pressing [Start] to pressing [Stop].
- To check Line 1, [Administrator Settings] -> [Fax Settings] -> [Line Parameter Setting] -> [Line Monitor Sound] should be set to “ON”.
- To check Line 2, [Administrator Settings] -> [Fax Settings] -> [Multi Line Settings] -> [Line Parameter Setting] -> [Line Monitor Sound] should be set to “ON”.
- The status of testing or results of tests are shown in the title line as follows

| | |
|---|---|
| RCV | Waiting signals |
| OK/NG | Results of signal reception |

- The V.34 signal does not appear at the signal receive test.

#### (a) V17: Default setting
- 14400bps

#### (b) V17: Setting item
- 14400bps
- 12000bps
- 9600bps
- 7200bps

#### (c) V29: Default setting
- 9600bps

#### (d) V29: Setting item
- 9600bps
- 7200bps

#### (e) V27ter: Default setting
- 4800 bps

#### (f) V27ter: Setting item
- 4800bps
- 2400bps

#### (g) V21
- No parameters

#### (h) PB: Default setting
- 0

#### (i) PB: Default setting
- 0 to 9, *, #, A, B, C, D

#### (j) Special Tone: Default setting
- 1100Hz

#### (k) Special Tone: Setting item
- 1100Hz
- 1300Hz
- 2100Hz

### 5.20.12 Fax Test-NCU TEST
- It will be displayed only when the optional FAX kit FK-514 is mounted.
- Specifiable for each line when there are multiple fax lines

#### (1) Use
- To check the operation of NCU.

#### (2) Procedure
1. Call the Service Mode to the screen.
2. Select -> [Test Mode] -> [FAX Test] -> [Fax Line Test].
3. Select a line, and touch the [NCU Test].
4. Select a test item.
5. Press the [Start] key. (In order to move to another test, select the next test item after pressing the [Stop] key.)

**NOTE**
- **When CML / CTL / TEL relay test is selected and the Start key is pressed, ON is displayed in the parameter and relay is turned to ON. When [Stop] is pressed, relay is turned OFF.**

- **When the DC-LOOP detection test is selected and Start key is pressed, DT=0001 is shown in the title row in case of detecting the DC-LOOP. If not detected, DT=0000 is displayed.**

| Contents of test | Device to be tested |
|---|---|
| **CML Relay** | **IC201, IC202** |
| **CTL Relay** | **RL201** |
| **TEL Relay** | **RL501 *** |
| **DC-LOOP Detect** | |
| **Speaker** | |
| **Outside Ring Send** | |
| **Audio Response Send** | |

- *** RL501 mounts only the Japanese.**

### 5.20.13 Fax Test-Dial Test

- Not used

### 5.20.14 Fax Test - Off-hook Test

- Not used

## 5.21 ADF

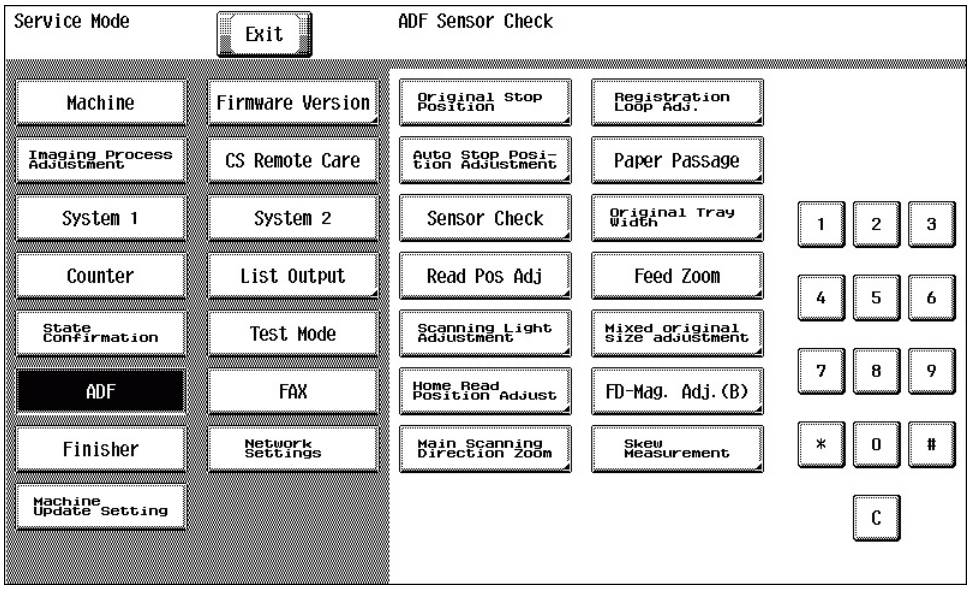


### 5.21.1 Original Stop Position

#### (1) Use

- To manually adjust the original stop position and the read position in each of the DF modes.
- When the result is Unable in the automatic adjustment of the original stop position.

#### (2) Procedure

##### (a) Sub Scanning Direction 1-Side

**NOTE**

- **Before performing this adjustment, the feed zoom adjustment needs to be complete.**
  **I.5.21.8 Feed Zoom**

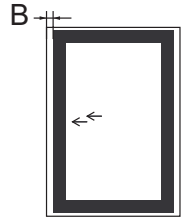


- The difference in the widths of B between the chart and the copy sample should fall within the following target.

| | |
|---|---|
| Target | 0 ± 2.0 mm |
| Setting range | -4.0 mm to +4.0 mm (1 step: 0.1 mm) |

1. Place the chart in the document feed tray (with the side having an arrow facing up).
2. Make a full size copy of the chart.
3. Check that the difference in the widths of B between the chart and the copy sample falls within the target.
4. Call the Service Mode to the screen.
5. Touch [ADF] -> [Original Stop Position].

6. Touch [Sub Scanning Direction 1-Side].
7. Enter the value from the 10-key pad. (Press the [+/-] key to change the +/- code.) )
   - If the difference in the widths of B is greater than the target, enter the [+] value.
   - If the difference in the widths of B is smaller than the target, enter the [-] value.
8. Touch [Test Copy].
9. Select the tray loading paper for the test copy.
10. Place the chart in the document feed tray.
11. Press the start key, and check the difference in the width B between the chart and the discharged copy sample.
12. Touch [END] twice.
13. Touch [Exit] on the Service Mode screen.
14. Turn OFF the main power switch, wait for 10 sec., then turn the switch ON.

### (b) Sub Scanning Direction 2-Side

**NOTE**

- **Before performing this adjustment, the "feed zoom adjustment" and "FD-Mag. Adj. (B)" adjustment needs to be complete.**
  **I.5.21.8 Feed Zoom**
  **I.5.21.12 FD-Mag. Adj. (B)**

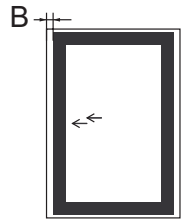


- The difference in the widths of B between the chart and the copy sample should fall within the following target.

| | |
|---|---|
| Target | 0 ± 2.0 mm |
| Setting range | -4.0 mm to +4.0 mm (1 step: 0.1 mm) |

1. Place the chart in the document feed tray (with the side having an arrow facing up).
2. Make a full size copy of the chart.
3. Check that the difference in the widths of B between the chart and the copy sample falls within the target.
4. Call the Service Mode to the screen.
5. Touch [ADF] -> [Original Stop Position].
6. Touch [Sub Scanning Direction 2-Side].
7. Enter the value from the 10-key pad. (Press the [+/-] key to change the +/- code.) )
   - If the difference in the widths of B is greater than the target, enter the [+] value.
   - If the difference in the widths of B is smaller than the target, enter the [-] value.
8. Touch [Test Copy].
9. Select the tray loading paper for the test copy.
10. Touch [2].
11. Touch [2-sided -> 2-sided].
12. Place the chart in the document feeding tray.
13. Press the start key, and check the difference in the width B between the chart and the discharged copy sample.
14. Touch [END] twice.
15. Touch [Exit] on the Service Mode screen.
16. Turn OFF the main power switch, wait for 10 sec., then turn the switch ON.

### (c) Main Scanning (Front)

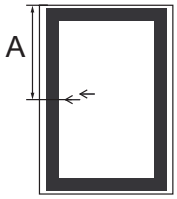


- The difference in the widths of A between the chart and the copy sample should fall within the following target.

| | |
|---|---|
| Target | 0 ± 2.0 mm |
| Setting range | -4.4 mm to +4.4 mm (1 step: 0.1 mm) |

1. Place the chart in the document feed tray (with the side having an arrow facing up).
2. Make a full size copy of the chart.
3. Check that the difference in the widths of A between the chart and the copy sample falls within the target.
4. Call the Service Mode to the screen.
5. Touch [ADF] -> [Original Stop Position].
6. Touch [Main Scanning (Front)].
7. Enter the value from the 10-key pad. (Press the [+/-] key to change the +/- code.) )
   - If the difference in the widths of A is greater than the target, enter the [+] value.
   - If the difference in the widths of A is smaller than the target, enter the [-] value.
8. Touch [Test Copy].
9. Select the tray loading paper for the test copy.
10. Place the chart in the document feeding tray.
11. Press the start key, and check the difference in the width A between the chart and the discharged copy sample.
12. Touch [END] twice.

13. Touch [Exit] on the Service Mode screen.
14. Turn OFF the main power switch, wait for 10 sec., then turn the switch ON.

#### (d) Main Scanning (Back)

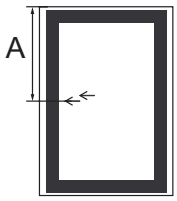


- The difference in the widths of A between the chart and the copy sample should fall within the following target.

| | |
|---|---|
| Target | 0 ± 2.0 mm |
| Setting range | -4.4 mm to +4.4 mm (1 step: 0.1 mm) |

1. Place the chart in the document feed tray. (with the side having an arrow facing up).
2. Make a full size copy of the chart.
3. Check that the difference in the widths of A between the chart and the copy sample falls within the target.
4. Call the Service Mode to the screen.
5. Touch [ADF] -> [Original Stop Position].
6. Touch [Main Scanning (Back)].
7. Enter the value from the 10-key pad. (Press the [+/-] key to change the +/- code.) )
   - If the difference in the widths of A is greater than the target, enter the [+] value.
   - If the difference in the widths of A is smaller than the target, enter the [-] value.
8. Touch [Test Copy].
9. Select the tray loading paper for the test copy.
10. Touch [2].
11. Touch [2-sided -> 2-sided].
12. Place the chart in the document feeding tray.
13. Press the start key, and check the difference in the width A between the chart and the discharged copy sample.
14. Touch [END] twice.
15. Touch [Exit] on the Service Mode screen.
16. Turn OFF the main power switch, wait for 10 sec., then turn the switch ON.

### 5.21.2 Registration Loop Adj.

#### (1) Use

- To adjust the length of the loop to be formed in paper before the registration rollers.
- When an original misfeed or skew occurs.

#### (2) Procedure

1. Call the Service Mode to the screen.
2. Touch [ADF] -> [Registration Loop Adj].
3. Select either [1-Side] or [Second Side] for the adjustment.
4. Touch clear and change the setting value using the 10-key pad. (Press the [+/-] key to change the +/- code.) )
   The amount of loop increases by the amount of positive (+) value and decreases by the amount of negative (-) value.
5. Touch [END].
6. Touch [Exit] on the Service Mode screen.
7. Turn OFF the main power switch, wait for 10 sec., then turn the switch ON.

#### (3) Default setting

- 0

#### (4) Setting range

- -5 mm to +5 mm (in 1 mm increments)

### 5.21.3 Auto Stop Position Adjustment

#### (1) Use

- To automatically adjust the read position for the Sub Scanning Direction.
- To check skew feed.
- When DF has been replaced.
- When CIS module has been replaced.

**NOTE**

- **Before performing this adjustment, the “feed zoom adjustment” and “FD-Mag. Adj. (B)” adjustment needs to be complete.**
  **I.5.21.8 Feed Zoom**
  **I.5.21.12 FD-Mag. Adj. (B)**

#### (2) Procedure

##### (a) Sub Scanning Direction 1-Side

1. Call the Service Mode to the screen.
2. Touch [ADF] -> [Auto Stop Position Adjustment].
3. Touch [Sub Scanning Direction 1-Side].

4. Place the chart in the document feed tray (with the side having an arrow facing up).
5. Press the Start key.
6. Make sure that result is OK. Then, touch [SET].
7. Touch [END].
8. Touch [Exit] on the Service Mode screen.
9. Turn OFF the main power switch, wait for 10 sec., then turn the switch ON.

**NOTE**
**If the result is [Unable]:**
- **Check and correct the skew of the document.**
- **Manually correct the value of [Original Stop Position].**
  **I.5.21.1 Original Stop Position**

#### (b) Sub Scanning Direction 2-Side

1. Call the Service Mode to the screen.
2. Touch [ADF] -> [Auto Stop Position Adjustment].
3. Touch [Sub Scanning Direction 2-Side].
4. Place the chart in the document feed tray (Set the chart with its blank side facing upward).
5. Press the Start key.
6. Make sure that result is OK. Then, touch [SET].
7. Touch [END].
8. Touch [Exit] on the Service Mode screen.
9. Turn OFF the main power switch, wait for 10 sec., then turn the switch ON.

**NOTE**
**If the result is [Unable]:**
- **Check and correct the skew of the document.**
- **Manually correct the value of [Original Stop Position].**
  **I.5.21.1 Original Stop Position**

#### (c) Main Scanning (Front)

1. Call the Service Mode to the screen.
2. Touch [ADF] -> [Auto Stop Position Adjustment].
3. Touch [Main Scanning (Front)].
4. Place the chart in the document feed tray (with the side having an arrow facing up).
5. Press the Start key.
6. Make sure that result is OK. Then, touch [SET].
7. Touch [END].
8. Touch [Exit] on the Service Mode screen.
9. Turn OFF the main power switch, wait for 10 sec., then turn the switch ON.

**NOTE**
**If the result is [Unable]:**
- **Check and correct the skew of the document.**
- **Manually correct the value of [Original Stop Position].**
  **I.5.21.1 Original Stop Position**

#### (d) Main Scanning (Back)

1. Call the Service Mode to the screen.
2. Touch [ADF] -> [Auto Stop Position Adjustment].
3. Touch [Main Scanning (Back)].
4. Place the chart in the document feed tray (Set the chart with its blank side facing upward).
5. Press the Start key.
6. Make sure that result is OK. Then, touch [SET].
7. Touch [END].
8. Touch [Exit] on the Service Mode screen.
9. Turn OFF the main power switch, wait for 10 sec., then turn the switch ON.

**NOTE**
**If the result is [Unable]:**
- **Check and correct the skew of the document.**
- **Manually correct the value of [Original Stop Position].**
  **I.5.21.1 Original Stop Position**

### 5.21.4 Paper Passage

#### (1) Use

- To check for paper passage through the DF in each of the DF modes.
- Used for checking the document path for any abnormal condition when a document misfeed occurs.

#### (2) Procedure

1. Call the Service Mode to the screen.
2. Touch [ADF] -> [Paper Passage].
3. Select a paper passage mode to be tested from [1-Sided No Detect], [1-Sided Mixed Org.] or [2-Sided].
4. Set the original in the feed tray.
5. The Start key changes from orange to blue.
6. Press the Start key. The operation starts.

**NOTE**

- **After starting the operation by pressing the Start key, if the Start key is pressed during the operation, the operation will be suspended.**
  **Then, if the Start key is pressed again during the suspension, the operation will be resumed.**
- **If the Stop key is pressed during the test operation, the test will be forced to end.**
- **If there is no Original set in the feed tray, the Start key will not work.**
- **All Originals set in the feed tray are passed through. Upon the completion of all Originals passed through, the paper through test ends.**

### 5.21.5 Sensor Check

#### (1) Use

- To check sensors on the paper path.
- When a document misfeed occurs.

#### (2) Procedure

1. Call the Service Mode to the screen.
2. Touch [ADF] -> [Sensor Check].
3. Operate the sensor to check by using paper or the like, and check the screen display.
   (Paper detected: 1, No paper detected: 0)

#### (3) Sensor check screen

- This is only typical screen which may be different from what are shown on each individual main body.

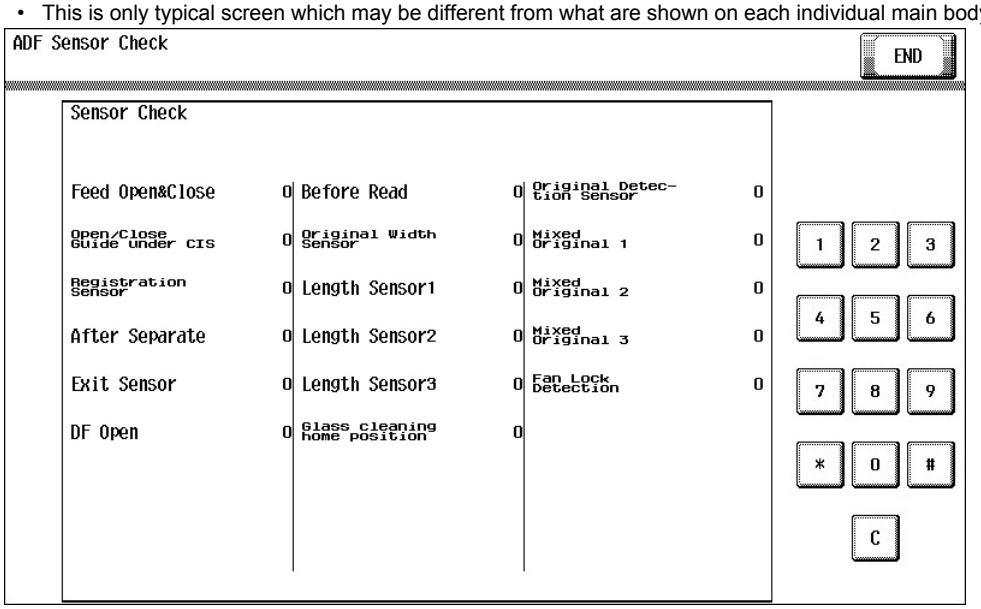


#### (4) Sensor check list

| Symbol (DF-704/ DF-629) | Panel display | Part/signal name | Operation characteristics/panel display | |
|---|---|---|---|---|
| | | | 1 | 0 |
| PS14/PS13 | Feed Open&Close | Upper door sensor | Open | Close |
| PS15/- | Open/Close Guide under CIS | CIS cover sensor *1 | Open | Close |
| PS3/PS3 | Registration Sensor | Registration sensor | Paper present | Paper not present |
| PS2 /PS2 | After Separate | After separate sensor | Paper present | Paper not present |
| PS5/PS5 | Exit Sensor | Document exit sensor | Paper present | Paper not present |
| RS201 | DF Open | Original cover sensor | Open | Close |
| PS6/PS4 | Before Read | Document reading sensor | Paper present | Paper not present |
| VR1 /VR1 | Original Width Sensor | Document width sensor | Analog value | |
| PS8/PS6 | Length Sensor1 | Document length sensor/1 | Paper present | Paper not present |
| PS9/PS7 | Length Sensor2 | Document length sensor/2 | Blocked | Unblocked |
| - | Length Sensor3 | - | - | - |
| PS13/PS12 | Glass cleaning home position | Document reading glass cleaning sensor | At home | Not at home |
| PS1 /PS1 | Original Detection Sensor | Document empty sensor | Paper present | Paper not present |
| PS10/PS8 | Mixed Original 1 | Mixed Original sensor/1 | Paper present | Paper not present |
| PS11/PS9 | Mixed Original 2 | Mixed Original sensor/2 | Paper present | Paper not present |
| PS12/PS10 | Mixed Original 3 | Mixed Original sensor/3 | Paper present | Paper not present |
| FM1/FM1 | Fan Lock Detection | DF cooling fan motor | Locked | Not locked |

*1: DF-704 only

### 5.21.6 Original Tray Width

#### (1) Use

- To set the values of maximum (A3 position) and minimum (B6 position) widths on the restriction plate positional volume.
- When an original misfeed occurs.
- When an original size detection error occurs.
- When the DF control board has been replaced.
- When the document width sensor has been replaced.

#### (2) Procedure

1. Call the Service Mode to the screen.
2. Touch [ADF] -> [Original Tray Width].

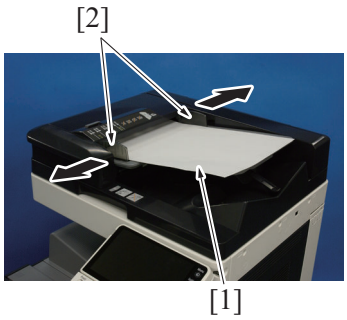


3. Set the A3 paper [1] on the original feed tray, and widen the width across the edge guides [2] by sliding them to the “A3” position.
4. Touch [Max. Width].
5. Press the Start key.
6. OK is displayed when the adjustment has been completed.

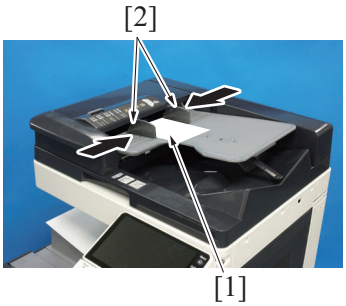


7. Set the B6 paper [1] on the original feed tray, and narrow the width across the edge guides [1] by sliding them to the “B6” position.
8. Touch [Min. Width].
9. Press the Start key.
10. OK is displayed when the adjustment has been completed.
11. Touch [END].
12. Touch [Exit] on the Service Mode screen.
13. Turn OFF the main power switch, wait for 10 sec., then turn the switch ON.

**NOTE**

**If the result is NG:**

- **Possible causes includes failure or wrong wiring of the document width sensor and failure of the DFCB.**

### 5.21.7 Read Pos Adj

#### (1) Use

- To adjust the original read position.
- When the scanner home sensor have been replaced.

#### (2) Procedure

##### (a) Auto Adjust

1. Call the Service Mode to the screen.
2. Touch [ADF] -> [Read Pos Adj].
3. Touch [Auto Adjust].

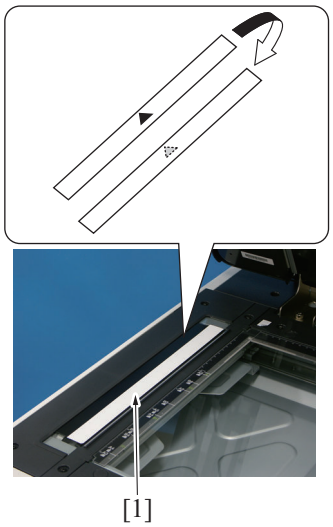


4. Open the DF.
5. Place the DF reading chart [1] so that a triangular mark may become the original glass side (downward) and the pointed tip of the triangle points toward the black sheet on the left side.
6. Press the Start key.

**NOTE**

- **Be sure that the DF reading chart is in position.**
- **Keep the document feeder open while making the adjustment.**
- **When the edge deviation at DF reading after carrying out this adjustment becomes larger, conduct the "I.5.21.1 Original Stop Position".**

7. Make sure that the result is OK.
8. Touch [END].
9. Touch [Exit] on the Service Mode screen.
10. Turn OFF the main power switch, wait for 10 sec., then turn the switch ON.

**NOTE**

**If the result is [Unable]:**

- **Check that the chart is in the correct place.**
- **Make the adjustment on the [Original Stop Position] screen.**
  **I.5.21.1 Original Stop Position**

#### (b) Orig. Feed Zoom Ad

- Not used

### 5.21.8 Feed Zoom

#### (1) Use

- To adjust the feed zoom in the front side feeding direction on the DF.
- When DF has been replaced.

#### (2) Procedure

#### (a) Auto Adjust

1. Call the Service Mode to the screen.
2. Touch [ADF] -> [Feed Zoom].
3. Touch [Auto Adjust].
4. Place the chart in the document feed tray (with the side having an arrow facing up).
5. Press the Start key.
6. Make sure that result is OK. Then, touch [SET].
7. Touch [END].
8. Touch [Exit] on the Service Mode screen.
9. Turn OFF the main power switch, wait for 10 sec., then turn the switch ON.

#### (b) Orig. Feed Zoom Ad

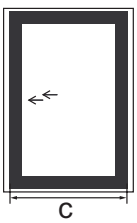


- The difference in the widths of C between the chart and the copy sample should fall within the following target.

| | |
|---|---|
| Target | 0 ± 1.0 mm |
| Setting range | -2.00% to +2.00% (1 step: 0.1%) |

1. Place the chart in the document feed tray (with the side having an arrow facing up).
2. Make a full size copy of the chart.
3. C width on the chart and one on the copy sample are measured and adjusted so that the difference of C width satisfies the target shown below.
4. Call the Service Mode to the screen.
5. Touch [ADF] -> [Feed Zoom].
6. Touch [Orig. Feed Zoom Ad].
7. Enter the value using the [+] / [-] keys.

- If the difference in the widths of C is greater than the target, enter the - value.
- If the difference in the widths of C is smaller than the target, enter the + value.

8. Touch [Test Copy].
9. Select the tray loading paper for the test copy.
10. Press the start key, and check the difference in the width C between the chart and the discharged copy sample.
11. Touch [END] twice.
12. Touch [Exit] on the Service Mode screen.
13. Turn OFF the main power switch, wait for 10 sec., then turn the switch ON.

### 5.21.9 Scanning Light Adjustment

#### (1) Use

- To adjust the scanning light of DF.
- Used for adjusting the difference in the scanning lights between scanning from the original glass and scanning from the DF original glass.

#### (2) Procedure

1. Call the Service Mode to the screen.
2. Touch [ADF] -> [Scanning Light Adjustment].
3. Select a color by pressing [Red], [Green], or [Blue].
4. Press the value using the [+] / [-] key.
   **NOTE**
   - **It is recommended that the scanning light adjustment should be made by the same steps for all the three colors of red, green, and blue.**
5. Touch [END].
6. Touch [Exit] on the Service Mode screen.
7. Turn OFF the main power switch, wait for 10 sec., then turn the switch ON.

#### (3) Setting range

- -4 to +4 (Step: 1)

### 5.21.10 Mixed original size adjustment

#### (1) Use

- To adjust paper length detection accuracy used during paper feed in DF mixed original mode.
- To set the threshold for each size detection based on the length detected when feeding standard sizes (A4S).
- When the DF control board has been replaced.

#### (2) Procedure

**NOTE**

- **Before performing this adjustment, the feed zoom adjustment needs to be complete.**
  **I.5.21.8 Feed Zoom**

1. Call the Service Mode to the screen.
2. Touch [ADF] -> [Mixed original Size adjustment].
3. Place the chart in the document feed tray.
4. Press the Start key.
5. Make sure that result is OK. Then, touch [SET].
6. Touch [END].
7. Touch [Exit] on the Service Mode screen.
8. Turn OFF the main power switch, wait for 10 sec., then turn the switch ON.

### 5.21.11 Home Read Position Adjust

#### (1) Use

- When image failure occurs due to the dirty back side shading shaft on the DF, use this function to adjust the home position of the shading shaft and to change a shading reference plate.

#### (2) Procedure

1. Call the Service Mode to the screen.
2. Touch [ADF] -> [Home Read Position Adjust].
3. Press the value using the [+] / [-] key.
4. Touch [END].
5. Touch [Exit] on the Service Mode screen.
6. Turn OFF the main power switch, wait for 10 sec., then turn the switch ON.

#### (3) Default setting

- 0

#### (4) Setting range

- -4 to +4 (Step: 1)

### 5.21.12 FD-Mag. Adj. (B)

#### (1) Use

- To adjust the feed zoom in the back side feeding direction on the DF.
- When DF and CIS has been replaced.

#### (2) Procedure

##### (a) Auto Adjust

1. Call the Service Mode to the screen.
2. Touch [ADF] -> [FD-Mag. Adj. (B)].
3. Touch [Auto Adjust].
4. Place the chart in the document feed tray (Set the chart with its blank side facing upward).
5. Press the Start key.
6. Make sure that result is OK. Then, touch [SET].
7. Touch [END].
8. Touch [Exit] on the Service Mode screen.
9. Turn OFF the main power switch, wait for 10 sec., then turn the switch ON.

##### (b) Orig. Feed Zoom Ad

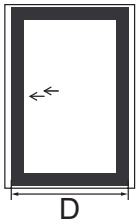


- The difference in the widths of D between the chart and the copy sample should fall within the following target.

| | |
|---|---|
| Target | 0 ± 1.0 mm |
| Setting range | -2.00% to +2.00% (1 step: 0.1%) |

1. Place the chart in the document feed tray (Set the chart with its blank side facing upward).
2. Make a full size copy of the chart.
3. D width on the chart and one on the copy sample are measured and adjusted so that the difference of D width satisfies the target shown below.
4. Call the Service Mode to the screen.
5. Touch [ADF] -> [FD-Mag. Adj. (B)].
6. Touch [Orig. Feed Zoom Ad].
7. Enter the value using the [+] / [-] keys.
   - If the difference in the widths of D is greater than the target, enter the - value.
   - If the difference in the widths of D is smaller than the target, enter the + value.
8. Touch [Test Copy].
9. Select the tray loading paper for the test copy.
10. Touch [2].
11. Touch [2-sided -> 2-sided].
12. Press the start key, and check the difference in the width D between the chart and the discharged copy sample.
13. Touch [END] twice.
14. Touch [Exit] on the Service Mode screen.
15. Turn OFF the main power switch, wait for 10 sec., then turn the switch ON.

### 5.21.13 Main Scanning Direction Zoom

#### (1) Use

- To adjust the feed zoom in the back side main scanning direction on the DF.
- When DF and CIS has been replaced.

#### (2) Procedure

##### (a) Auto Adjust

1. Call the Service Mode to the screen.
2. Touch [ADF] -> [Main Scanning Direction Zoom].
3. Touch [Auto Adjust].
4. Place the chart in the document feed tray (Set the chart with its blank side facing upward).
5. Press the Start key.
6. Make sure that result is OK. Then, touch [SET].
7. Touch [END].
8. Touch [Exit] on the Service Mode screen.
9. Turn OFF the main power switch, wait for 10 sec., then turn the switch ON.

#### (b) Orig. Feed Zoom Ad

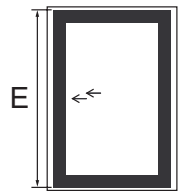


- The difference in the widths of E between the chart and the copy sample should fall within the following target.

| | |
|---|---|
| Target | 0 ± 2.0 mm |
| Setting range | -1.00% to +1.00% (1 step: 0.1%) |

1. Place the chart in the document feed tray (Set the chart with its blank side facing upward).
2. Make a full size copy of the chart.
3. E width on the chart and one on the copy sample are measured and adjusted so that the difference of E width satisfies the target shown below.
4. Call the Service Mode to the screen.
5. Touch [ADF] -> [Main Scanning Direction Zoom].
6. Touch [Main scanning direction zoom adj].
7. Enter the value using the [+] / [-] keys.
   - If the difference in the widths of E is greater than the target, enter the - value.
   - If the difference in the widths of E is smaller than the target, enter the + value.
8. Touch [Test Copy].
9. Select the tray loading paper for the test copy.
10. Touch [2].
11. Touch [2-sided -> 2-sided].
12. Press the start key, and check the difference in the width E between the chart and the discharged copy sample.
13. Touch [END] twice.
14. Touch [Exit] on the Service Mode screen.
15. Turn OFF the main power switch, wait for 10 sec., then turn the switch ON.

### 5.21.14 Skew Measurement

#### (1) Use

- Measure the DF skew, adjust accordingly.

#### (2) Procedure

#### (a) DFSkew (Front)

1. Call the Service Mode to the screen.
2. Touch [ADF] -> [Skew Measurement] -> [DFSkew (Front)].
3. Place the chart in the document feeding tray.
   Place the chart with the arrows facing upwards.
4. Press the Start key.
   The measurement results are displayed on the panel.
5. Repeat procedures 3 to 4 five times.
6. Check the [Avg. Value] displayed on the panel is within the "specified range".
   Specified range: +/- 0.5 %
7. If the value of [Avg. Value] does not fall within the "specified range", repeat the adjustment.
   DF-629:I.12.1.2 Adjusting front side skew feed on ADF
   DF-704I.13.1.2 Adjusting front side skew feed on ADF

#### (b) DFSkew (Back)

- *1: It will be displayed only when the optional dual scan document feeder DF-704 is mounted.

1. Call the Service Mode to the screen.
2. Touch [ADF] -> [Skew Measurement] -> [DFSkew (Back)].
3. Place the chart in the document feeding tray.
   Place the chart with the arrows facing upwards.
4. Press the Start key.
   The measurement results are displayed on the panel.
5. Repeat procedures 3 to 4 five times.
6. Check the [Avg. Value] displayed on the panel is within the "specified range".
   Specified range: +/- 0.5 %
7. If the value of [Avg. Value] does not fall within the "specified range", repeat the adjustment.
   I.13.1.3 Adjusting back side skew feed on ADF

## 5.22 FAX (Line1)

### FAX Setting (Line1)

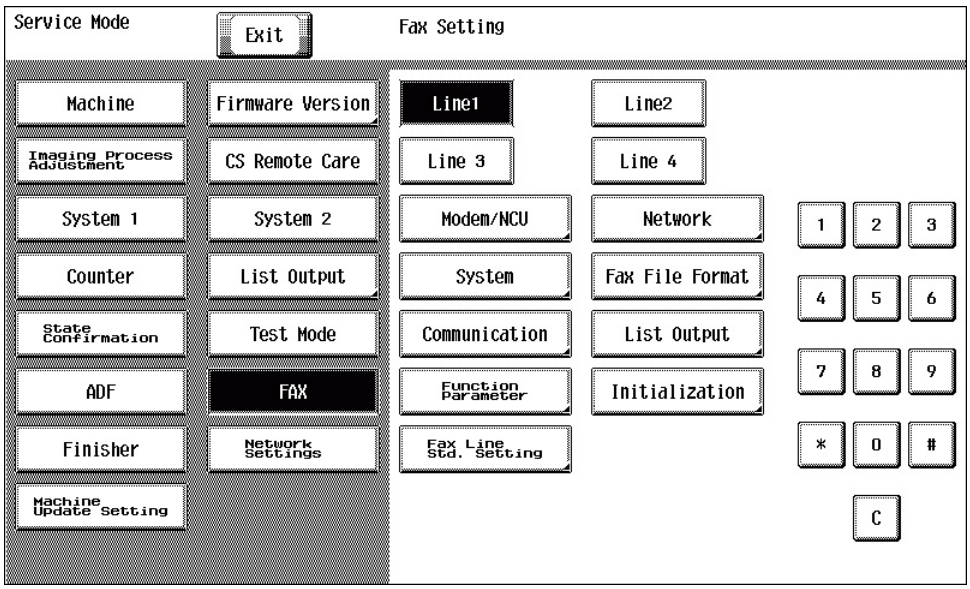


- It will be displayed only when [Service Mode] -> [System 2] -> [Option Board Status] shows that FAX (circuit 1) is set to “Set”.

### 5.22.1 Modem/NCU

#### (1) V34:1/2 : RX Max. Bit Speed

##### (a) Use

- To set the max. bit speed for reception in V.34.

##### (b) Default setting

- 33600 bps

##### (c) Setting range

- 2,400 to 33,600 bps (steps: 2,400 bps)

#### (2) V34:1/2 : TX Max. Bit Speed

##### (a) Use

- To set the max. bit speed for transmission in V.34.

##### (b) Default setting

- 33600 bps

##### (c) Setting range

- 2,400 to 33,600 bps (steps: 2,400 bps)

#### (3) V34:1/2 : Control CH Speed

##### (a) Use

- A bit speed of the control channel.
- The negotiation of 2400/1200 is performed in the V.34 start-up procedure.

##### (b) Default setting

- 1200 bps

##### (c) Setting item

- 1200 bps
- 2400 bps

#### (4) V34:1/2 : Max. SYMB Speed

##### (a) Use

- Maximum modulation speed (baud rate) of V.34
  - 3429 SYMB: 3429 33.6 k to 4.8 k
  - 3200 SYMB: 3200 31.2 k to 2.4 k
  - 3000 SYMB: 3000 28.8 k to 2.4 k
  - 2800 SYMB: 2800
  - 2400 SYMB: 2400
- The modulation speed of both sending and receiving change by change of setting.

- The upper limit value of V.34 maximum bit speed is determined.
- Normally you do not need to change the value. In case that a V.34 error frequently occurs, you can attempt to set up 3000 SYMB and decrease the symbol rate, for instance.

#### (b) Default setting

- 3429 SYMB

#### (c) Setting item

- 2400 SYMB
- 2800 SYMB
- 3000 SYMB
- 3200 SYMB
- 3429 SYMB

### (5) V34:2/2: V34 Points

#### (a) Use

- Select the optimal Eye Pattern in accordance with the line state obtained from V.34 transmission training.

#### (b) Default setting

- Auto

#### (c) Setting item

- 16-Point
- 4-Point

### (6) V17 Send Max Speed: TX Max. Speed

#### (a) Use

- To set the max. speed for transmission.

#### (b) Default setting

- V17-14400bps

#### (c) Setting item

- V17-14400 bps
- V17-12000bps
- V17-9600bps
- V17-7200bps
- V29-9600bps
- V29-7200bps
- V27-4800bps
- V27-2400bps

### (7) V17 Send Max Speed: RX Max. Speed

#### (a) Use

- To set the max. speed for reception.

#### (b) Default setting

- V17-14400bps

#### (c) Setting item

- V17-14400 bps
- V29-9600bps
- V27-4800bps

### (8) TxATT: PIX TxATT

#### (a) Use

- To set the output level of PIX TxATT.
- Directly sets modem. There are no external attenuator.

#### (b) Procedure

- The setting value are different depending on the country.

### (9) TxATT: TONE/Procedure Signal TxATT

#### (a) Use

- To set the output level of TONE/Procedure Signal TxATT.
- Directly sets modem. There are no external attenuator.

#### (b) Procedure

- The setting value are different depending on the country.

### (10) TxATT: CED/ANSam TxATT

#### (a) Use

- To set the output level of CED/ANSam TxATT.
- Directly sets modem. There are no external attenuator.

#### (b) Procedure

- The setting value are different depending on the country.

### (11) TxATT: DTMF TxATT

#### (a) Use

- To set the output level of DTMF TxATT.
- Directly sets modem. There are no external attenuator.

#### (b) Procedure

- The setting value are different depending on the country.

### (12) Level: CD/SED ON Level

#### (a) Use

- To set reception signal sensitivity level.
- SED is not used.

#### (b) Default setting

- -48 dBm

#### (c) Setting range

- -48 to -33 dBm (steps: 5 dBm)

### (13) Level: DTMF H-L Level Difference

#### (a) Use

- To set DTMF H-L level difference.

#### (b) Default setting

- 2.0 dB

#### (c) Setting range

- 1.0 to 4.0 dB (step: 0.5 dB)

### (14) Cable EQL

#### (a) Use

- To correct the delay characteristics of the communication line.

#### (b) Default setting

- 0 Km

#### (c) Setting item

- 0 Km
- 1.8 Km
- 3.6 Km
- 7.2 Km

## 5.22.2 Network

### (1) Network Setting 1: Receive Signal Detection Mode

#### (a) Use

- To set whether to detect the receive signal by the number of times or by time.
- Sets to “Time” when ringer can not be detected by the number.

#### (b) Default setting

- No. of Times

#### (c) Setting item

- No. of Times

- Time

### (2) Network Setting 1: BUSY TONE Detection

#### (a) Use

- To set whether to use the Busy Tone detection or not.

#### (b) Default setting

- ON

#### (c) Setting item

- ON
- OFF

### (3) Network Setting 1: No. of Times of Busy Tone Detection

#### (a) Use

- To set the number of times of Busy Tone detection.

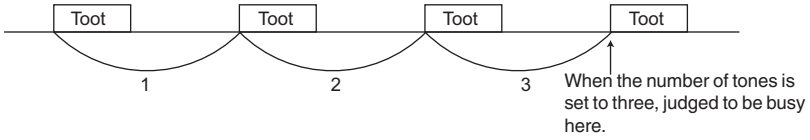


#### (b) Default setting

- 0 times

#### (c) Setting range

- 0 to 15 count (step: 1 count)

**NOTE**

- **0 time shows no detection is done.**

### (4) Network Setting 2: 1300 Hz Detection

#### (a) Use

- To set whether to use the 1300 Hz detection or not.
- Set this function to “ON” if the facsimile network (F-net) is to be used.

#### (b) Default setting

- OFF

#### (c) Setting item

- ON
- OFF

### (5) Network Setting 2: Dial Tone Detection

#### (a) Use

- To set whether to use the Dial Tone detection or not.

#### (b) Default setting

- ON

#### (c) Setting item

- ON
- OFF

### (6) Network Setting 2: DC-LOOP Check

#### (a) Use

- Checks the DC loop current before dialing.
- When the current is zero, an error occurs. (T.80)
- You can change the setting to be compliant to standards in other countries. In Japan, set this parameter to OFF.

#### (b) Default setting

- OFF

#### (c) Setting item

- ON
- OFF

#### (7) Network Setting 2: min. RING OFF Time

##### (a) Use

- Minimum time to recognize ringer interval.

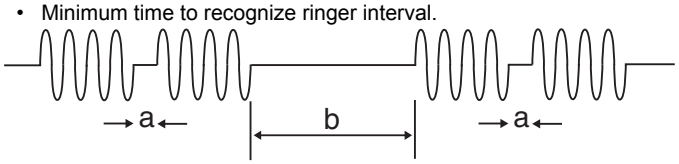


| | | | |
|---|---|---|---|
| a | To avoid judging “a” as a ring-off time. | b | Ring-off time |

##### (b) Default setting

- 0 ms

##### (c) Setting range

- 0 to 1000 ms (step: 100 ms)

#### (8) Network Setting 2: Response Waiting Time

##### (a) Use

- To set the response waiting time.

| | | |
|---|---|---|
| Response waiting timer (55sec) | Calling | Starts after dialing. Until CED is received. |

##### (b) Default setting

- 55 s

##### (c) Setting range

- 35 to 115 s (steps: 1 s)

#### (9) Network Setting 2: Pause Time

##### (a) Use

- The pause time for one pause key (pause between digits)

##### (b) Default setting

- 1 s

##### (c) Setting range

- 1 to 7 s (steps: 1 s)

### 5.22.3 System

#### (1) Display Setting: Closed area Rx

##### (a) Use

- To set whether or not to use the menu display for closed reception by using F-code for junk fax messages.

##### (b) Default setting

- ON

##### (c) Setting item

- ON
- OFF

#### (2) Display Setting: Re-Transmission

##### (a) Use

- To set whether to use the re-transmission function or not.

##### (b) Default setting

- ON

##### (c) Setting item

- ON
- OFF

**NOTE**

- **This setting is "OFF" when [Service Mode] -> [Billing Setting] -> [Management Function Choice] shows that key counter or vendor 2 is mounted.**

### (3) Display Setting: Compulsory Memory RX

#### (a) Use

- To set whether to use the compulsory memory reception function or not.

#### (b) Default setting

- ON

#### (c) Setting item

- ON
- OFF

**NOTE**

- **When turned "ON", the function permits selection of ON or OFF setting for the compulsory memory reception function that allows a document when received not to be printed automatically and, instead, to be printed through manual operation.**

### (4) Display Setting: Reject Calls

#### (a) Use

- To set whether to use the reject calls function or not.

#### (b) Default setting

- ON

#### (c) Setting item

- ON
- OFF

**NOTE**

- **When turned "ON", the function displays the function that allows the user to set a remote machine to be rejected as a reject call number.**

### (5) Display Setting: Relay

#### (a) Use

- To set whether to use the relay function or not.

#### (b) Default setting

- OFF

#### (c) Setting item

- ON
- OFF

### (6) Scan Setting: Frame Erasure HP

#### (a) Use

- To set the frame erasure size during reading.
- The four edges of the original are erased by the same width.

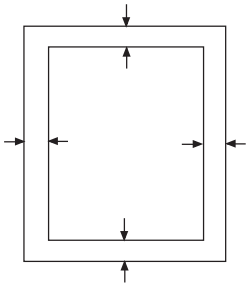

- Erases the outer lines to prevent black lines from appearing. Effective in the book transmission.

#### (b) Default setting

- 10 mm

#### (c) Setting item

- 5 mm
- 10 mm
- 15 mm

### (7) System Function: Fax Board Watchdog

#### (a) Use

- To set whether to enable watchdog by the fax board CPU or not.

| | |
|---|---|
| ON | Reset when hung up. |

| | |
|---|---|
| OFF | Keeps being hung up. |

**(b) Default setting**

- ON

**(c) Setting item**

- ON
- OFF

### (8) System Function: Fax BOOT Rewrite on ISW

**(a) Use**

- Required when a BOOT BLOCK program is upgraded or a hardware is changed.

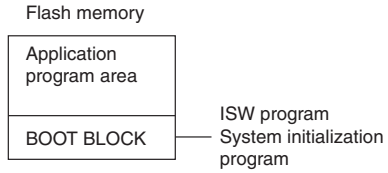


**(b) Default setting**

- OFF

**(c) Setting item**

- ON
- OFF

### (9) System Function: Error Code Display Time

**(a) Use**

- To set the communication error code display time.

**(b) Default setting**

- 20 s

**(c) Setting item**

- 10 to 250 s (step: 10 s)
- HOLD

### (10) Communication Setting: Auto Rotation Send (LT)

**(a) Use**

- To set whether to rotate the Letter size original automatically or not for transmission.

| | |
|---|---|
| ON | Transmits in the A4 width. |
| OFF | Transmits in the A3 width. |

**(b) Default setting**

- ON

**(c) Setting item**

- ON
- OFF

### (11) Communication Setting: Auto Rotation Send (A4T)

**(a) Use**

- To set whether to rotate the A4 size original automatically or not for transmission.

| | |
|---|---|
| ON | Transmits in the A4 width. |
| OFF | Transmits in the A3 width. |

**(b) Default setting**

- ON

**(c) Setting item**

- ON
- OFF

#### (12) Communication Setting: Error Page Resending

##### (a) Use

- To set whether to retransmit, after a communication error occurs, the document starting with the error page or all pages.

| | |
|---|---|
| Error Page | Retransmit the document starting with the error page |
| All Page | Retransmit the document all pages |

##### (b) Default setting

- Error Page

##### (c) Setting item

- Error Page
- All Page

#### (13) Communication Setting: Number of Redials (Error Page)

##### (a) Use

- To set the number of redials for the error page.
- Counted as a busy redial when the error page redial is busy.

##### (b) Default setting

- The default setting is different depending on the country.

##### (c) Setting range

- 0 to 7 (step: 1)

### 5.22.4 Fax File Format

#### (1) Use

The following data can be initialized.

- All of the scan/fax documents stored in the box are erased.
- All of the boxes produced automatically by the F code are erased.

#### (2) Procedure

1. Call the Service Mode to the screen.
2. Touch [FAX].
3. Touch [Fax File Format].
4. Press the Start key.
5. The Fax File Format is executed.

### 5.22.5 Communication

#### (1) Protocol: V8 / V34 Protocol

##### (a) Use

- To set whether to use the V.8/V.34 protocol or not.

##### (b) Default setting

- ON

##### (c) Setting item

- ON
- OFF

#### (2) Protocol: V17 EP TONE

##### (a) Use

- Whether the EP tone (Echo Protect: 2100Hz) is added to the top of the training signal.

##### (b) Default setting

- ON

##### (c) Setting item

- ON
- OFF

#### (3) Protocol: V29 EP TONE

##### (a) Use

- Whether the EP tone (Echo Protect: 2100Hz) is added to the top of the training signal.

**(b) Default setting**

- OFF

**(c) Setting item**

- ON
- OFF

### (4) Protocol: V17 Selection Mode "-"

**(a) Use**

- V.34 is not used when a dash (-) is added at the top of dial number.

**(b) Default setting**

- OFF

**(c) Setting item**

- ON
- OFF

### (5) Protocol: ANSam Send Time

**(a) Use**

- To set the transmission time for the V.8 protocol signal ANSam.
- Usually not need to be changed.

**(b) Default setting**

- 4.0 s

**(c) Setting range**

- 1.0 to 5.5 s (step: 0.5 s)

### (6) Int'l Comm. Function: Foreign Communication Function

**(a) Use**

- To set whether or not to use the mode that employs the number of DIS waiting times.

**(b) Default setting**

- ON

**(c) Setting item**

- ON
- OFF

### (7) Int'l Comm. Function: No. of DIS Waiting Times at Foreign Communication

**(a) Use**

- To set the number of DIS waiting times.

**(b) Default setting**

- 1

**(c) Setting item**

- 1
- 2

### (8) Int'l Comm. Function: V34 Speed

**(a) Use**

- To set the V.34 international communication mode speed.

**(b) Default setting**

- 28800 bps

**(c) Setting range**

- 16800 to 33600 bps (step: 2400 bps)

### (9) Int'l Comm. Function: V17 Speed

**(a) Use**

- To set the V.17 international communication mode speed.

**(b) Default setting**

- 7200 bps

**(c) Setting range**

- 7200 to 14400 bps (step: 2400 bps)

**(10) Int'l Comm. Function: V29 Speed**

**(a) Use**

- To set the V.29 international communication mode speed.

**(b) Default setting**

- 4800 bps

**(c) Setting range**

- 2400 to 9600 bps (step: 2400 bps)

**(11) TIMER 1: T1**

**(a) Use**

| | | |
|---|---|---|
| T1 timer (T.30 standard) | Calling | Designate by the response waiting timer |
| | Called | Starts after DIS is output. The waiting time until DCS is received. |
| Response waiting timer (55sec) | Calling | Starts after dialing. Until CED is received. |

**(b) Default setting**

- 35 s

**(c) Setting range**

- 30 to 90 s (step: 5 s)

**(12) TIMER 1: DCS-TCF DELAY**

**(a) Use**

- To set the delay time between DCS and TCF.

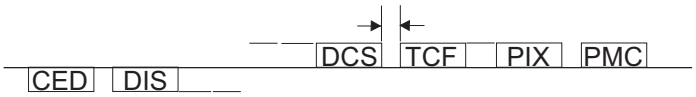


PMC: Post Message Command

**(b) Default setting**

- 80 ms

**(c) Setting range**

- 50 to 150 ms (step: 10 ms)

**(13) TIMER 1: CED-DIS DELAY**

**(a) Use**

- To set the delay time between CED and DIS.

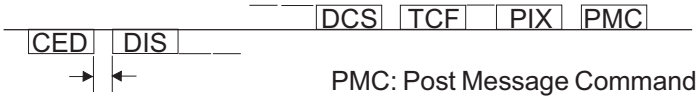


PMC: Post Message Command

**(b) Default setting**

- 80 ms

**(c) Setting range**

- 50 to 150 ms (step: 10 ms)

### (14) TIMER 1: PIX-PMC DELAY

#### (a) Use

- To set the delay time between PIX and PMC.




PMC: Post Message Command

#### (b) Default setting

- 80 ms

#### (c) Setting range

- 50 to 150 ms (step: 10 ms)

### (15) TIMER 2: EOL-EOL

#### (a) Use

- To set the transmission time between EOLs.




#### (b) Default setting

- 13.0 s

#### (c) Setting range

- 4.0 to 25.5 s (step: 0.5 s)

### (16) TIMER 2: CFR-PIXWAIT

#### (a) Use

- Sets the waiting time from CFR is sent to the image signals are received.
- Radio fax on boats occasionally requires more than 6 sec.

#### (b) Default setting

- 6.0 s

#### (c) Setting range

- 6.0 to 25.5 s (step: 0.5 s)

### (17) TIMER 2: EOM-PIXWAIT

#### (a) Use

- Waiting time to receive PIX before sending DIS when EOM is used.
- Some fax machines sends PIX without returning to Phase B in spite of EDM.

#### (b) Default setting

- 5.5 s

#### (c) Setting range

- 5.5 to 25.5 s (step: 0.5 s)

### (18) TIMER 2: JM WAIT

#### (a) Use

- Time to continue outputting CM until receiving JM.

#### (b) Default setting

- 9.0 s

#### (c) Setting range

- 6.0 to 25.5 s (step: 0.5 s)

#### (19) Others: ECM Function

##### (a) Use

- Set whether or not to cancel reception ECM (error correction mode).

##### (b) Default setting

- ON

##### (c) Setting item

- ON
- OFF

#### (20) Others: Frame Size at ECM TX

##### (a) Use

- To set the frame size at ECM transmission.

##### (b) Default setting

- 256

##### (c) Setting item

- 64
- 256

#### (21) Others: Coding Ability

##### (a) Use

- To set the coding ability.
- Effective to both sending and reception.

##### (b) Default setting

- MH/MR/MMR/JBIG

##### (c) Setting item

- MH
- MH/MR
- MH/MR/MMR
- MH/MR/MMR/JBIG

### 5.22.6 List Output

#### (1) Report Addition Information

##### (a) Use

- To set whether or not to add the diagnosis code or dial number to the communication journal.

| | |
|---|---|
| Diagnosis Code | The diagnosis code is printed on the communication journal. |
| Dial Number | The dial number is printed on the communication journal. |

##### (b) Default setting

- OFF

##### (c) Setting item

- Diagnosis Code
- Dial Number
- OFF

#### (2) TX Result Report

##### (a) Use

- To set whether or not to add image to the transmission result report.
- Even if set to "With image" images are not attached at the time of the quick memory transmission and the manual transmission.

##### (b) Default setting

- With image

##### (c) Setting item

- With image
- Without image

#### (3) Protocol Trace Auto Output

##### (a) Use

- To set the timing for the protocol trace auto output.

##### (b) Default setting

- OFF

##### (c) Setting item

- Always
- Error
- OFF

### 5.22.7 Function Parameter

#### (1) Use

- Function parameters can be set through addressing.

#### (2) Procedure

1. Call the Service Mode to the screen.
2. Touch [FAX].
3. Touch [Function Parameter].
4. Select [Address] and then, enter the address using [A] to [F] or keypad.
   - A Cursor is movable if ◀ or ▶ is pushed.
5. Next, select [Data] and enter a value using binary numbers with keypad.
6. When the address and the value are correct, touch [Apply].
7. After the settings have been completed, touch [END].

#### (3) Address parameter list

**NOTE**

- **When changing a value in this address parameter list, be sure to comply with the phone line standards of other countries.**
- **Depending on values that have been changed, compliance with the phone line standards of other countries may not be obtained.**
  - **FAX setting (Address parameter list: for line 1, line 2, line 3 and line 4)**
  - **FAX setting (Address parameter list: for line 1)**
  - **FAX setting (Address parameter list: for line 2)**
  - **FAX setting (Address parameter list: for line 3)**
  - **FAX setting (Address parameter list: for line 4)**

### 5.22.8 Initialization

#### (1) Use

- The following data can be initialized.

| | |
|---|---|
| Fax Function Parameter | The function set condition is initialized into the Factory Default condition. |
| Communication Journal Data | All of the Communication Journal is erased. |

NOTICE

- For the formats of the Abbreviated Registration Data, the Program Registration Data, The Group Registration Data, and the F-code Box Data, see "I.5.22.4 Fax File Format".

#### (2) Procedure

1. Turn the main power switch ON.
2. Wait until the warm-up cycle is completed.
   **NOTE**
   - **Wait until an alarm message, such as "Preparing fax/scan", disappears.**
   - **Execution of "Initialization" before the warm-up cycle is completed may not be successful.**
3. Call the Service Mode to the screen.
4. Touch [FAX].
5. Touch [Initialization].
6. Select data you want to initialize.
   - Supplement: Two or more selections are possible for data.
7. Touch [Yes].
8. When a verification message is displayed, touch [Yes].
9. The data selected is initialized.

### 5.22.9 FAX Line Std. Setting

#### (1) Use

- Used to confirm fax settings.
  **NOTE**
  - **If the following settings are changed, the settings from [Service Mode] -> [Fax Settings] > [Line1] -> [Network] and [System] are also changed.**
    **FAX Line Std. Setting 1: Receive Signal Detection Mode, BUSY TONE Detection, No. of Times of Busy Tone Detection**
    **FAX Line Std. Setting 2: Dial Tone Detection, Pause Time, Response Waiting Time**

**FAX Line Std. Setting 3: Error Page Resending, Number of Redial**

- **If the following settings are changed, the settings from [Administrator Settings] -> [Fax Settings] -> [Line Parameter Setting] is also changed.**
  **FAX Line Std. Setting 1:Number of RX Call Rings, Receive Time Interval Setting**
  **FAX Line Std. Setting 4: Number of Redials, Redial Interval, Line Monitor Sound Volume (Send), Line Monitor Sound Volume (Receive)**

### (2) FAX Line Std. Setting-V17 RX Error

#### (a) Use

- This configures whether or not to lower the reception speed when reattempting to receive data after a receive error occurs.

#### (b) Procedure

1. Call the Service Mode to the screen.
2. Select [FAX] -> [Line 1] -> [FAX Line Std. Setting] -> [FAX Line Std. Setting 3]
3. Select either [ON] or [OFF] for [V17 RX Error].
   **NOTE**
   - **When this is set to [ON], the device will use V17 to receive data the next time after a receive error occurs.**

#### (c) Default setting

- ON

#### (d) Setting item

- ON
- OFF

## 5.23 FAX setting (Line2, Line 3, Line 4)

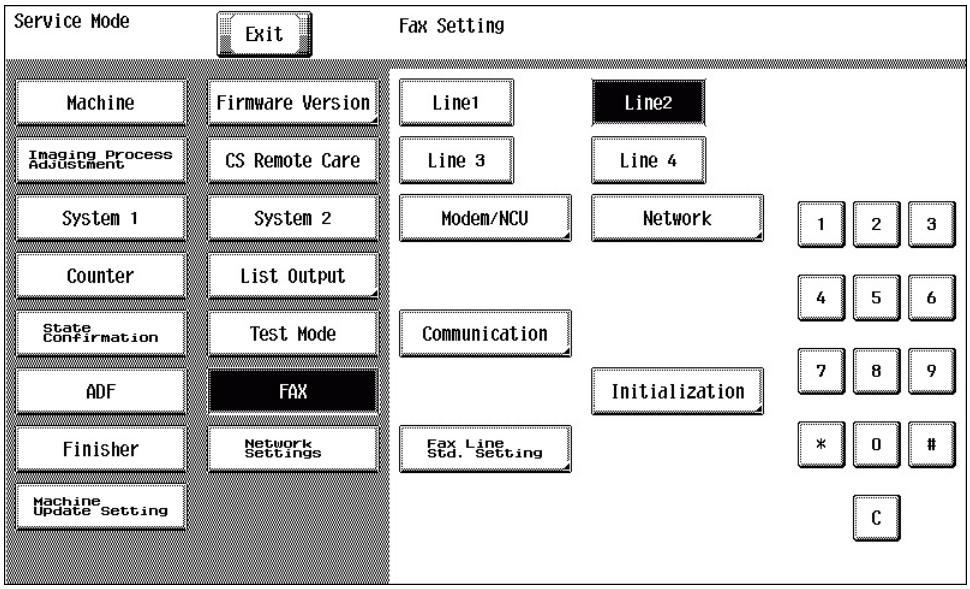


- It will be displayed only when [Service Mode] -> [System 2] -> [Option Board Status] shows that FAX (circuit 2) is set to “Set”.

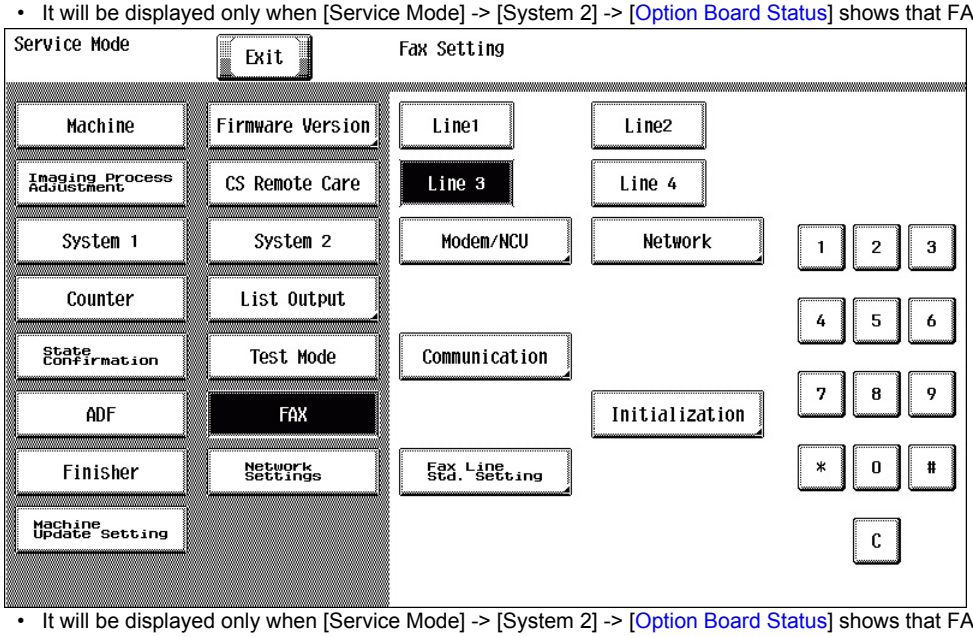


- It will be displayed only when [Service Mode] -> [System 2] -> [Option Board Status] shows that FAX (circuit 3) is set to “Set”.

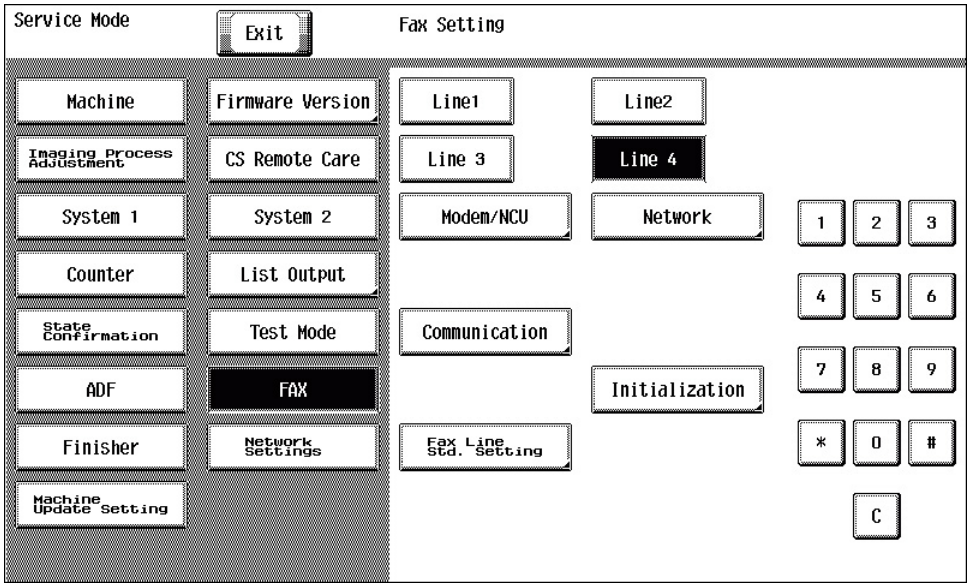


- It will be displayed only when [Service Mode] -> [System 2] -> [Option Board Status] shows that FAX (circuit 4) is set to “Set”.

### 5.23.1 Modem/NCU

#### (1) V34:1/2 : RX Max. Bit Speed

##### (a) Use

- To set the max. bit speed for reception in V.34.

##### (b) Default setting

- 33600 bps

##### (c) Setting range

- 2,400 to 33,600 bps (steps: 2,400 bps)

#### (2) V34:1/2 : TX Max. Bit Speed

##### (a) Use

- To set the max. bit speed for transmission in V.34.

##### (b) Default setting

- 33600 bps

##### (c) Setting range

- 2,400 to 33,600 bps (steps: 2,400 bps)

#### (3) V34:1/2 : Control CH Speed

##### (a) Use

- A bit speed of the control channel.
- The negotiation of 2400/1200 is performed in the V.34 start-up procedure.

##### (b) Default setting

- 1200 bps

##### (c) Setting item

- 1200 bps
- 2400 bps

#### (4) V34:1/2 : Max. SYMB Speed

##### (a) Use

- Maximum modulation speed (baud rate) of V.34
  - 3429 SYMB: 3429 33.6 k to 4.8 k
  - 3200 SYMB: 3200 31.2 k to 2.4 k
  - 3000 SYMB: 3000 28.8 k to 2.4 k
  - 2800 SYMB: 2800
  - 2400 SYMB: 2400
- The modulation speed of both sending and receiving change by change of setting.
- The upper limit value of V.34 maximum bit speed is determined.

- Normally you do not need to change the value. In case that a V.34 error frequently occurs, you can attempt to set up 3000 SYMB and decrease the symbol rate, for instance.

#### (b) Default setting

- 3429 SYMB

#### (c) Setting item

- 2400 SYMB
- 2800 SYMB
- 3000 SYMB
- 3200 SYMB
- 3429 SYMB

### (5) V34:2/2: V34 Points

#### (a) Use

- Select the optimal Eye Pattern in accordance with the line state obtained from V.34 transmission training.

#### (b) Default setting

- Auto

#### (c) Setting item

- 16-Point
- 4-Point

### (6) V17 Send Max Speed: TX Max. Speed

#### (a) Use

- To set the max. speed for transmission.

#### (b) Default setting

- V17-14400bps

#### (c) Setting item

- V17-14400 bps
- V17-12000bps
- V17-9600bps
- V17-7200bps
- V29-9600bps
- V29-7200bps
- V27-4800bps
- V27-2400bps

### (7) V17 Send Max Speed: RX Max. Speed

#### (a) Use

- To set the max. speed for reception.

#### (b) Default setting

- V17-14400bps

#### (c) Setting item

- V17-14400 bps
- V29-9600bps
- V27-4800bps

### (8) TxATT: PIX TxATT

#### (a) Use

- To set the output level of PIX TxATT.
- Directly sets modem. There are no external attenuator.

#### (b) Procedure

- The setting value are different depending on the country.

### (9) TxATT: TONE/Procedure Signal TxATT

#### (a) Use

- To set the output level of TONE/Procedure Signal TxATT.
- Directly sets modem. There are no external attenuator.

#### (b) Procedure

- The setting value are different depending on the country.

### (10) TxATT: CED/ANSam TxATT

#### (a) Use

- To set the output level of CED/ANSam TxATT.
- Directly sets modem. There are no external attenuator.

#### (b) Procedure

- The setting value are different depending on the country.

### (11) TxATT: DTMF TxATT

#### (a) Use

- To set the output level of DTMF TxATT.
- Directly sets modem. There are no external attenuator.

#### (b) Procedure

- The setting value are different depending on the country.

### (12) Level: CD/SED ON Level

#### (a) Use

- To set reception signal sensitivity level.
- SED is not used.

#### (b) Default setting

- -48 dBm

#### (c) Setting range

- -48 to -33 dBm (steps: 5 dBm)

### (13) Level: DTMF H-L Level Difference

#### (a) Use

- To set DTMF H-L level difference.

#### (b) Default setting

- 2.0 dB

#### (c) Setting range

- 1.0 to 4.0 dB (step: 0.5 dB)

### (14) Cable EQL

#### (a) Use

- To correct the delay characteristics of the communication line.

#### (b) Default setting

- 0 Km

#### (c) Setting item

- 0 Km
- 1.8 Km
- 3.6 Km
- 7.2 Km

## 5.23.2 Network

### (1) Network Setting 1: Receive Signal Detection Mode

#### (a) Use

- To set whether to detect the receive signal by the number of times or by time.
- Sets to “Time” when ringer can not be detected by the number.

#### (b) Default setting

- No. of Times

#### (c) Setting item

- No. of Times

- Time

### (2) Network Setting 1: BUSY TONE Detection

#### (a) Use

- To set whether to use the Busy Tone detection or not.

#### (b) Default setting

- OFF

#### (c) Setting item

- ON
- OFF

### (3) Network Setting 1: No. of Times of Busy Tone Detection

#### (a) Use

- To set the number of times of Busy Tone detection.

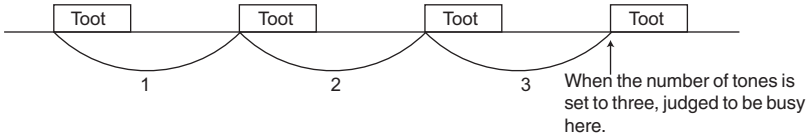


#### (b) Default setting

- 0 times

#### (c) Setting range

- 0 to 15 count (step: 1 count)

**NOTE**

- **0 time shows no detection is done.**

### (4) Network Setting 2: 1300 Hz Detection

#### (a) Use

- To set whether to use the 1300 Hz detection or not.
- Set this function to “ON” if the facsimile network (F-net) is to be used.

#### (b) Default setting

- OFF

#### (c) Setting item

- ON
- OFF

### (5) Network Setting 2: Dial Tone Detection

#### (a) Use

- To set whether to use the Dial Tone detection or not.

#### (b) Default setting

- ON

#### (c) Setting item

- ON
- OFF

### (6) Network Setting 2: DC-LOOP Check

#### (a) Use

- Checks the DC loop current before dialing.
- When the current is zero, an error occurs. (T.80)
- You can change the setting to be compliant to standards in other countries. In Japan, set this parameter to OFF.

#### (b) Default setting

- OFF

#### (c) Setting item

- ON
- OFF

#### (7) Network Setting 2: min. RING OFF Time

##### (a) Use

- Minimum time to recognize ringer interval.

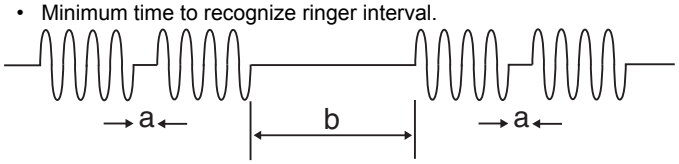


| | | | |
|---|---|---|---|
| a | To avoid judging “a” as a ring-off time. | b | Ring-off time |

##### (b) Default setting

- 0 ms

##### (c) Setting range

- 0 to 1000 ms (step: 100 ms)

#### (8) Network Setting 2: Response Waiting Time

##### (a) Use

- To set the response waiting time.

| | | |
|---|---|---|
| Response waiting timer (55sec) | Calling | Starts after dialing. Until CED is received. |

##### (b) Default setting

- 55 s

##### (c) Setting range

- 35 to 115 s (steps: 1 s)

#### (9) Network Setting 2: Pause Time

##### (a) Use

- The pause time for one pause key (pause between digits)

##### (b) Default setting

- 1 s

##### (c) Setting range

- 1 to 7 s (steps: 1 s)

### 5.23.3 Communication

#### (1) Protocol: V8 / V34 Protocol

##### (a) Use

- To set whether to use the V.8/V.34 protocol or not.

##### (b) Default setting

- ON

##### (c) Setting item

- ON
- OFF

#### (2) Int’l Comm. Function: Foreign Communication Function

##### (a) Use

- To set whether or not to use the mode that employs the number of DIS waiting times.

##### (b) Default setting

- ON

##### (c) Setting item

- ON
- OFF

#### (3) Int’l Comm. Function: No. of DIS Waiting Times at Foreign Communication

##### (a) Use

- To set the number of DIS waiting times.

**(b) Default setting**

- 1

**(c) Setting item**

- 1
- 2

### (4) Int'l Comm. Function: V34 Speed

**(a) Use**

- To set the V.34 international communication mode speed.

**(b) Default setting**

- 28800 bps

**(c) Setting range**

- 16800 to 33600 bps (step: 2400 bps)

### (5) Int'l Comm. Function: V17 Speed

**(a) Use**

- To set the V.17 international communication mode speed.

**(b) Default setting**

- 7200 bps

**(c) Setting range**

- 7200 to 14400 bps (step: 2400 bps)

### (6) Int'l Comm. Function: V29 Speed

**(a) Use**

- To set the V.29 international communication mode speed.

**(b) Default setting**

- 4800 bps

**(c) Setting range**

- 2400 to 9600 bps (step: 2400 bps)

### (7) Others: ECM Function

**(a) Use**

- Set whether or not to cancel reception ECM (error correction mode).

**(b) Default setting**

- ON

**(c) Setting item**

- ON
- OFF

### (8) Others: Frame Size at ECM TX

**(a) Use**

- To set the frame size at ECM transmission.

**(b) Default setting**

- 256

**(c) Setting item**

- 64
- 256

### (9) Others: Coding Ability

**(a) Use**

- To set the coding ability.
- Effective to both sending and reception.

#### (b) Default setting

- MH/MR/MMR/JBIG

#### (c) Setting item

- MH
- MH/MR
- MH/MR/MMR
- MH/MR/MMR/JBIG

### 5.23.4 Initialize

#### (1) Use

- The following data can be initialized.

| | |
|---|---|
| Fax Function Parameter | The function set condition is initialized into the Factory Default condition. |

NOTICE
- For the formats of the Abbreviated Registration Data, the Program Registration Data, The Group Registration Data, and the F-code Box Data, see "I.5.22.4 Fax File Format".

#### (2) Procedure

1. Turn the main power switch ON.
2. Wait until the warm-up cycle is completed.
   **NOTE**
   - **Wait until an alarm message, such as "Preparing fax/scan", disappears.**
   - **Execution of "Initialization" before the warm-up cycle is completed may not be successful.**
3. Call the Service Mode to the screen.
4. Touch [FAX].
5. Touch [Initialization].
6. Touch [Fax Function Parameter].
7. Touch [Yes].
8. When a verification message is displayed, touch [Yes].
9. The data selected is initialized.

### 5.23.5 FAX Line Std. Setting

#### (1) Use

- Used to confirm fax settings.
  **NOTE**
  - **When the below settings are changed by this setting, the [Service Mode] -> [FAX] -> [Line 2, Line 3, Line 4] -> [Network] or [Service Mode] -> [FAX] -> [Line1] -> [System] settings are also changed.**
    **FAX Line Std. Setting 1: Receive Signal Detection Mode, BUSY TONE Detection, No. of Times of Busy Tone Detection**
    **FAX Line Std. Setting 2: Dial Tone Detection, Pause Time, Response Waiting Time**
    **FAX Line Std. Setting 3: Error Page Resending, Number of Redial**
  - **If the following settings are changed, the settings from [Administrator Settings] -> [Fax Settings] -> [Line Parameter Setting] is also changed.**
    **FAX Line Std. Setting 1:Number of RX Call Rings, Receive Time Interval Setting**
    **FAX Line Std. Setting 4: Number of Redials, Redial Interval, Line Monitor Sound Volume (Send), Line Monitor Sound Volume (Receive)**

#### (2) FAX Line Std. Setting-V17 RX Error

##### (a) Use

- This configures whether or not to lower the reception speed when reattempting to receive data after a receive error occurs.

##### (b) Procedure

1. Call the Service Mode to the screen.
2. Select [FAX] -> [Line 2/ Line 3/ Line 4] -> [FAX Line Std. Setting] -> [FAX Line Std. Setting 3]
3. Select either [ON] or [OFF] for [V17 RX Error].
   **NOTE**
   - **When this is set to [ON], the device will use V17 to receive data the next time after a receive error occurs.**

##### (c) Default setting

- ON

##### (d) Setting item

- ON
- OFF

## 5.24 FAX setting (Address parameter list: for line 1, line 2, line 3 and line 4)

### 5.24.1 0b000#

| Address | Items | Bit No | Contents | Setting | Default | | | CSRC | |
|---|---|---|---|---|---|---|---|---|---|
| | | | | | Japan | North America | Europe | Command | Parameter |
| 0b0000 | Redial interval | 7 | | Utility Mode (0-3) | 0x03 | 0x03 | 0x03 | X0 | 00 |
| | | 6 | | | | | | | |
| | | 5 | | | | | | | |
| | | 4 | | | | | | | |
| | | 3 | Redial interval (min, HEX, 0 - 15) | | | | | | |
| | | 2 | | | | | | | |
| | | 1 | | | | | | | |
| | | 0 | | | | | | | |
| 0b0001 | No. of busy redials | 7 | | Utility Mode (0-2) | 0x03 | 0x01 | 0x03 | X0 | 01 |
| | | 6 | | | | | | | |
| | | 5 | | | | | | | |
| | | 4 | | | | | | | |
| | | 3 | No. of busy redials (No, HEX, 0 - 15) | | | | | | |
| | | 2 | | | | | | | |
| | | 1 | | | | | | | |
| | | 0 | | | | | | | |
| 0b0002 | No. of error redials | 7 | | Utility Mode Special Setting (0-2) | 0x03 | 0x01 | 0x03 | X0 | 02 |
| | | 6 | | | | | | | |
| | | 5 | | | | | | | |
| | | 4 | | | | | | | |
| | | 3 | No. of error redials (No, HEX, 0 - 15) | | | | | | |
| | | 2 | | | | | | | |
| | | 1 | | | | | | | |
| | | 0 | | | | | | | |
| 0b0003 | Setting related to FAX memory | 7 | | Utility Mode (0-2) Utility Mode Special Setting (0-2, 4) | 0x08 | 0x08 | 0x08 | X0 | 03 |
| | | 6 | V34 mode at the time of error page redial<br>0: Inhibited<br>1: Enabled | | | | | | |
| | | 5 | | | | | | | |
| | | 4 | Resend from the first page at the time of error page redial<br>0: Retransmitted from error page<br>1: Retransmitted from initial page | | | | | | |
| | | 3 | Call acceptance operation with toner empty<br>0: Refused<br>1: Permitted | | | | | | |
| | | 2 | | | | | | | |
| | | 1 | | | | | | | |
| | | 0 | | | | | | | |
| 0b0004 | FAX communication HP | 7 | | Utility Mode (3-5) Utility Mode Special Setting (2, 6, 7) | 0x05 | 0x05 | 0x05 | X0 | 04 |
| | | 6 | | | | | | | |
| | | 5 | Quick memory transmission<br>0: OFF<br>1: ON | | | | | | |
| | | 4 | File deleted after polled transmission<br>0: Yes<br>1: No | | | | | | |
| | | 3 | Reception mode<br>0: Auto<br>1: Manual | | | | | | |
| | | 2 | V.34<br>0: OFF<br>1: ON | | | | | | |

| Address | Items | Bit No | Contents | Setting | Default | | | CSRC | |
|---|---|---|---|---|---|---|---|---|---|
| | | | | | Japan | North America | Europe | Command | Parameter |
| | | 1 | International transmission<br>0: OFF<br>1: ON | | | | | | |
| | | 0 | ECM transmission<br>0: OFF<br>1: ON | | | | | | |
| 0b0005 | Forward TX Setting | 7 | | Utility Mode (0, 1, 6) | 0x00 | 0x00 | 0x00 | X0 | 05 |
| | | 6 | Two-sided recording of FAX<br>0: Possible<br>1: Impossible | | | | | | |
| | | 5 | | | | | | | |
| | | 4 | | | | | | | |
| | | 3 | Default transfer FAX setting<br>00: Not specified<br>01: Line 1<br>10: Line 2 | | | | | | |
| | | 2 | | | | | | | |
| | | 1 | Forward TX Setting<br>00: No forwarding<br>01: Forwarding + Always (print)<br>10: Forwarding + Only when not delivered (print) | | | | | | |
| | | 0 | | | | | | | |
| 0b0006 | FAX reception automatic output setting | 7 | Two-sided recording | Utility Mode (0, 1, 2, 4, 6, 7) | 0x01 | 0x01 | 0x01 | X0 | 06 |
| | | 6 | | | | | | | |
| | | 5 | Inched recording paper selection | | | | | | |
| | | 4 | Fax Output Setting (only for color MFP)<br>0: Batch Print<br>1: Page Print<br>NOTE<br>In the case of B&W MFP, only “Batch Print” can be supported. Therefore, always set the value to “0”. | | | | | | |
| | | 3 | Face-up output | | | | | | |
| | | 2 | Page division recording | | | | | | |
| | | 1 | Output tray HP<br>00:Tray 1<br>01:Tray 2<br>10:Tray 3<br>11:Tray 4 | | | | | | |
| | | 0 | | | | | | | |
| 0b0007 | FAX reception automatic output setting 2 | 7 | STOP is effected for printing during reception | Utility Mode (2-5)<br>Utility Mode Special Setting (6, 7) | 0xd4 | 0xf4 | 0xd4 | X0 | 07 |
| | | 6 | STOP is effected for printing after reception | | | | | | |
| | | 5 | Inched paper priority | | | | | | |
| | | 4 | Paper tray fixing<br>000:Tray 1<br>001:Tray 2<br>010:Tray 3<br>011:Tray 4<br>100: LCT<br>101: Auto | | | | | | |
| | | 3 | | | | | | | |
| | | 2 | | | | | | | |
| | | 1 | LG is used. | | | | | | |
| | | 0 | LT is used. | | | | | | |
| 0b0008 | Setting of recording paper for reception | 7 | Selection without A5R<br>0: A4->B5<br>1: B5->A4<br>Only when all of the following conditions are met:<br>A. Destination is “Japan” or “Europe”.<br>B. Fax reception print is set as follows: [“Split print ON” or “Split print OFF”] and [Paper tray/paper size is auto] | Utility Mode (0, 1) | 0x00 | 0x00 | 0x00 | X0 | 08 |

| Address | Items | Bit No | Contents | Setting | Default | | | CSRC | |
|---|---|---|---|---|---|---|---|---|---|
| | | | | | Japan | North America | Europe | Command | Parameter |
| | | | C. “Letter/Ledger over A4/A3 OFF” | | | | | | |
| | | 6 | | | | | | | |
| | | 5 | | | | | | | |
| | | 4 | | | | | | | |
| | | 3 | | | | | | | |
| | | 2 | | | | | | | |
| | | 1 | Paper select mode<br>00: APS<br>01: Recording paper designation mode 1<br>10: Recording paper designation mode 2 | | | | | | |
| | | 0 | | | | | | | |
| 0b0009 | Setting of recording paper size for reception | 7 | | Utility Mode | 0x0f | 0x1f | 0x0f | X0 | 09 |
| | | 6 | | | | | | | |
| | | 5 | | | | | | | |
| | | 4 | 01000: A3<br>01001: B4<br>01111: A4<br>10001: 8.5 x 14<br>11000: 11 x 17<br>11111: 8.5 x 11 | | | | | | |
| | | 3 | | | | | | | |
| | | 2 | | | | | | | |
| | | 1 | | | | | | | |
| | | 0 | | | | | | | |
| 0b000a | Target reduction rate when A4/LTR is used | 7 | Target reduction rate when A4/LTR is used (HEX, %) | - | 0x5a | 0x5a | 0x5a | X0 | 0A |
| | | 6 | | | | | | | |
| | | 5 | | | | | | | |
| | | 4 | | | | | | | |
| | | 3 | | | | | | | |
| | | 2 | | | | | | | |
| | | 1 | | | | | | | |
| | | 0 | | | | | | | |
| 0b000b | Other target reduction rate | 7 | Other target reduction rate (HEX, %) | - | 0x5d | 0x5d | 0x5d | X0 | 0B |
| | | 6 | | | | | | | |
| | | 5 | | | | | | | |
| | | 4 | | | | | | | |
| | | 3 | | | | | | | |
| | | 2 | | | | | | | |
| | | 1 | | | | | | | |
| | | 0 | | | | | | | |
| 0b000c | BOOT rewrite on FAX ISW | 7 | | Utility Mode Special Setting (0) | 0x00 | 0x00 | 0x00 | X0 | 0C |
| | | 6 | | | | | | | |
| | | 5 | | | | | | | |
| | | 4 | | | | | | | |
| | | 3 | | | | | | | |
| | | 2 | | | | | | | |
| | | 1 | | | | | | | |
| | | 0 | Boot area rewrite<br>0: No<br>1: Yes | | | | | | |
| 0b000d | Reduction rate used in APS | 7 | Received image reduction rate at APS (HEX, %) | - | 0x5d | 0x5d | 0x5d | X0 | 0D |
| | | 6 | | | | | | | |
| | | 5 | | | | | | | |
| | | 4 | | | | | | | |
| | | 3 | | | | | | | |
| | | 2 | | | | | | | |
| | | 1 | | | | | | | |
| | | 0 | | | | | | | |
| 0b000e | Minimum reduction rate | 7 | Received image reduction rate at APS (A3/B4 width) (HEX, %) | Utility Mode | 0x60 | 0x60 | 0x60 | X0 | 0E |
| | | 6 | | | | | | | |

| Address | Items | Bit No | Contents | Setting | Default | | | CSRC | |
|---|---|---|---|---|---|---|---|---|---|
| | | | | | Japan | North America | Europe | Command | Parameter |
| | | 5 | | | | | | | |
| | | 4 | | | | | | | |
| | | 3 | | | | | | | |
| | | 2 | | | | | | | |
| | | 1 | | | | | | | |
| | | 0 | | | | | | | |
| 0b000f | Incomplete TX hold | 7 | Debug mode<br>0: OFF<br>1: ON (3min) | Utility Mode (0-3) | 0x00 | 0x00 | 0x00 | X0 | 0F |
| | | 6 | | | | | | | |
| | | 5 | | | | | | | |
| | | 4 | | | | | | | |
| | | 3 | File holding time<br>0000: 12 hours<br>0001: 24 hours<br>0010: 48 hours<br>0011: 72 hours | | | | | | |
| | | 2 | | | | | | | |
| | | 1 | | | | | | | |
| | | 0 | | | | | | | |

### 5.24.2 0b001#

| Address | Items | Bit No | Contents | Setting | Default | | | CSRC | |
|---|---|---|---|---|---|---|---|---|---|
| | | | | | Japan | North America | Europe | Command | Parameter |
| 0b0010 | Inter-station timer | 7 | HEX (unit: second)(00 - ffh)(00 means 03) | - | 0x03 | 0x03 | 0x03 | X0 | 10 |
| | | 6 | | | | | | | |
| | | 5 | | | | | | | |
| | | 4 | | | | | | | |
| | | 3 | | | | | | | |
| | | 2 | | | | | | | |
| | | 1 | | | | | | | |
| | | 0 | | | | | | | |
| 0b0012 - 0b0015 | Reserved area | 7 | | - | 0xff | 0xff | 0xff | X0 | 12 - 15 |
| | | 6 | | | | | | | |
| | | 5 | | | | | | | |
| | | 4 | | | | | | | |
| | | 3 | | | | | | | |
| | | 2 | | | | | | | |
| | | 1 | | | | | | | |
| | | 0 | | | | | | | |
| 0b0016 | PC-FAX RX | 7 | TSI routing function<br>0: OFF<br>1: ON | Utility Mode (0-5) | 0x10 | 0x10 | 0x10 | X0 | 16 |
| | | 6 | At operation with PC-FAX Rx code unspecified<br>0: PC Reception<br>1: Print | | | | | | |
| | | 5 | PC-FAX Rx print<br>0: No<br>1: Yes | | | | | | |
| | | 4 | | | | | | | |
| | | 3 | PC-FAX reception mode<br>000: OFF<br>001: ON + Received at fixed box<br>010: Dialin + Received at fixed box<br>011: ON + Received at specified box<br>100: Dialin + Reception at specified box | | | | | | |
| | | 2 | | | | | | | |
| | | 1 | | | | | | | |

| Address | Items | Bit No | Contents | Setting | Default | | | CSRC | |
|---|---|---|---|---|---|---|---|---|---|
| | | | | | Japan | North America | Europe | Command | Parameter |
| | | 0 | Password check<br>0: OFF<br>1: ON | | | | | | |
| 0b0017 - 0b001f | PC-FAX reception password | 7 | ASCII 20 digits | Utility Mode | ALL 0x20 | ALL 0x20 | ALL 0x20 | X0 | 17 – 1F |
| | | 6 | | | | | | | |
| | | 5 | | | | | | | |
| | | 4 | | | | | | | |
| | | 3 | | | | | | | |
| | | 2 | | | | | | | |
| | | 1 | | | | | | | |
| | | 0 | | | | | | | |

### 5.24.3 0b002#

| Address | Items | Bit No | Contents | Setting | Default | | | CSRC | |
|---|---|---|---|---|---|---|---|---|---|
| | | | | | Japan | North America | Europe | Command | Parameter |
| 0b0020 - 0b002a | PC-FAX reception password | 7 | ASCII 20 digits | Utility Mode | ALL 0x20 | ALL 0x20 | ALL 0x20 | X0 | 20 - 2A |
| | | 6 | | | | | | | |
| | | 5 | | | | | | | |
| | | 4 | | | | | | | |
| | | 3 | | | | | | | |
| | | 2 | | | | | | | |
| | | 1 | | | | | | | |
| | | 0 | | | | | | | |
| 0b002b | FAX reception automatic output setting 3 | 7 | | Utility Mode (0-3) | 0x01 | 0x01 | 0x01 | X0 | 2B |
| | | 6 | | | | | | | |
| | | 5 | | | | | | | |
| | | 4 | | | | | | | |
| | | 3 | Output No. of copies Setting range:0 - (15) | | | | | | |
| | | 2 | | | | | | | |
| | | 1 | | | | | | | |
| | | 0 | | | | | | | |
| 0b002c | Setting for 2 lines | 7 | Line 2 transmission setting<br>00: Transmission/Reception<br>01: Reception only<br>10: Transmission only | Utility Mode (0) | 0x00 | 0x00 | 0x00 | X0 | 2C |
| | | 6 | | | | | | | |
| | | 5 | | | | | | | |
| | | 4 | | | | | | | |
| | | 3 | | | | | | | |
| | | 2 | | | | | | | |
| | | 1 | | | | | | | |
| | | 0 | | | | | | | |
| 0b002d | PC-FAX Setting | 7 | | Utility Mode (0-1) | 0x00 | 0x00 | 0x00 | X0 | 2D |
| | | 6 | | | | | | | |
| | | 5 | | | | | | | |
| | | 4 | | | | | | | |
| | | 3 | | | | | | | |
| | | 2 | | | | | | | |
| | | 1 | PC-FAX transmission line specification<br>00: Not specified<br>01: Line 1<br>10: Line 2<br>11: Reserved | | | | | | |
| | | 0 | | | | | | | |

### 5.24.4 0b003#

| Address | Items | Bit No | Contents | Setting | Default | | | CSRC | |
|---|---|---|---|---|---|---|---|---|---|
| | | | | | Japan | North America | Europe | Command | Parameter |
| 0b0032 | I-Fax encoding system capability (default for auto transmission capability) | 7 | | Utility Mode (0) | 0x04 | 0x04 | 0x04 | X0 | 32 |
| | | 6 | | | | | | | |
| | | 5 | | | | | | | |
| | | 4 | | | | | | | |
| | | 3 | | | | | | | |
| | | 2 | 000: (Setting prohibited)<br>001: MH<br>010: MR/MH<br>100: MMR/MR/MH | | | | | | |
| | | 1 | | | | | | | |
| | | 0 | | | | | | | |
| 0b0039 | Communication function | 7 | Interception of 1-address transmission in broadcasting transmission<br>0: Permitted<br>1: Prohibited | Utility Mode (0-3) | 0x44 | 0x44 | 0x44 | X0 | 39 |
| | | 6 | ITI printing, unit ID preference function<br>0: Not preferred<br>1: Preferred | | | | | | |
| | | 5 | Dial number duplication check during broadcasting transmission<br>0: Checked<br>1: Not checked | | | | | | |
| | | 4 | F code transmission function<br>0: No<br>1: Yes | | | | | | |
| | | 3 | Abandoning error pages during transmission<br>0: Not abandoned<br>1: Abandoned | | | | | | |
| | | 2 | Incomplete TX hold function<br>0: Yes<br>1: No | | | | | | |
| | | 1 | Relay reception function<br>0: Yes<br>1: No | | | | | | |
| | | 0 | Confidential reception function<br>0: Yes<br>1: No | | | | | | |
| 0b003a - 0b003f | Character ID [46] | 7 | ASCII [46]<br>When ID is less than 46 digits, justify to the left and insert space at the top. (With NULL terminators) | Utility Mode Service Mode | ALL 0x00 | ALL 0x00 | ALL 0x00 | X0 | 3A - 3F |
| | | 6 | | | | | | | |
| | | 5 | | | | | | | |
| | | 4 | | | | | | | |
| | | 3 | | | | | | | |
| | | 2 | | | | | | | |
| | | 1 | | | | | | | |
| | | 0 | | | | | | | |

### 5.24.5 0b004#, 0b005#

| Address | Items | Bit No | Contents | Setting | Default | | | CSRC | |
|---|---|---|---|---|---|---|---|---|---|
| | | | | | Japan | North America | Europe | Command | Parameter |
| 0b0040 - 0b005f | Character ID [46] | 7 | ASCII [46]<br>When ID is less than 46 digits, justify to the left and insert space at the top. (With NULL terminators) | Utility Mode Service Mode | ALL 0x00 | ALL 0x00 | ALL 0x00 | X0 | 40 - 5F |
| | | 6 | | | | | | | |
| | | 5 | | | | | | | |
| | | 4 | | | | | | | |
| | | 3 | | | | | | | |
| | | 2 | | | | | | | |
| | | 1 | | | | | | | |

| Address | Items | Bit No | Contents | Setting | Default | | | CSRC | |
|---|---|---|---|---|---|---|---|---|---|
| | | | | | Japan | North America | Europe | Command | Parameter |
| | | 0 | | | | | | | |

### 5.24.6 0b006#

| Address | Items | Bit No | Contents | Setting | Default | | | CSRC | |
|---|---|---|---|---|---|---|---|---|---|
| | | | | | Japan | North America | Europe | Command | Parameter |
| 0b0060 - 0b0067 | Character ID [46] | 7<br>6<br>5<br>4<br>3<br>2<br>1<br>0 | ASCII [46]<br>When ID is less than 46 digits, justify to the left and insert space at the top. (With NULL terminators) | Utility Mode<br>Service Mode | ALL 0x00 | ALL 0x00 | ALL 0x00 | X0 | 60 - 67 |
| 0b0068 | Reception refuse | 7<br>6<br>5<br>4<br>3<br>2<br>1 | | Utility Mode (0) | 0x00 | 0x00 | 0x00 | X0 | 68 |
| | | 0 | Call acceptance rejected - Number display<br>0: Disconnected line<br>1: No response | | | | | | |
| 0b0069 | Recording paper priority selection | 7<br>6<br>5<br>4<br>3<br>2 | | Utility Mode | | | | X0 | 69 |
| | | 1<br>0 | 00: Automatic selection<br>01: Fixed size<br>10: Priority | | | | | | |
| 0b006a | Box number error operation | 7<br>6<br>5 | | Utility Mode | 0x00 | 0x00 | 0x00 | X0 | 6A |
| | | 4 | Print or not print the images received when the TSI transfer terminates normally.<br>0:OFF<br>1:ON | | | | | | |
| | | 3 | Operation with no routing registration or no registered BOX upon the TSI routing turned ON<br>0: Print output<br>1: Saved in forced memory reception BOX | | | | | | |
| | | 2<br>1 | Reception of unregistered box sub No.<br>00: Print<br>01: Main line<br>10: Sub line | | | | | | |
| | | 0 | | | | | | | |
| 0b006c | Reserved area | 7<br>6<br>5<br>4<br>3 | | Utility Mode | 0x00 | 0x00 | 0x00 | X0 | 6C |

| Address | Items | Bit No | Contents | Setting | Default | | | CSRC | |
|---|---|---|---|---|---|---|---|---|---|
| | | | | | Japan | North America | Europe | Command | Parameter |
| | | 2 | | | | | | | |
| | | 1 | | | | | | | |
| | | 0 | | | | | | | |

### 5.24.7 0e000#

| Address | Items | Bit No | Contents | Setting | Default | | | CSRC | |
|---|---|---|---|---|---|---|---|---|---|
| | | | | | Japan | North America | Europe | Command | Parameter |
| 0e0000 | Error line processing/ judgment | 7 | RTP transmission | - | 0x01 | 0x01 | 0x82 | X1 | 00 |
| | | 6 | | | | | | | |
| | | 5 | Error line recirculation | | | | | | |
| | | 4 | Addition of error sign | | | | | | |
| | | 3 | | | | | | | |
| | | 2 | Judgment of No. of sequential error lines | | | | | | |
| | | 1 | Error line rate judgment | | | | | | |
| | | 0 | Judgment of No. of error lines | | | | | | |
| 0e0001 | No. of error lines-very good | 7 | No. of very good judgment lines (HEX)<br>No. of error linesVeryGoodErrorNum, MCF is transmitted. | - | 0x10 | 0x10 | 0x10 | X1 | 01 |
| | | 6 | | | | | | | |
| | | 5 | | | | | | | |
| | | 4 | | | | | | | |
| | | 3 | | | | | | | |
| | | 2 | | | | | | | |
| | | 1 | | | | | | | |
| | | 0 | | | | | | | |
| 0e0002 | No. of error lines-good | 7 | No. of good judgment error lines (HEX)<br>VeryGoodErrorNum<No. of error linesGoodErrorNum, RTP is transmitted | - | 0x40 | 0x40 | 0x80 | X1 | 02 |
| | | 6 | | | | | | | |
| | | 5 | | | | | | | |
| | | 4 | | | | | | | |
| | | 3 | | | | | | | |
| | | 2 | | | | | | | |
| | | 1 | | | | | | | |
| | | 0 | | | | | | | |
| 0e0003 | No. of error lines-bad | 7 | No. of bad judgment error lines (HEX)<br>GoodErrorNum<No. of error lines BadErrorNum, RTN is transmitted.<br>No. of error lines>BadErrorNum, it is considered to be error line over. | - | 0x80 | 0x80 | 0xff | X1 | 03 |
| | | 6 | | | | | | | |
| | | 5 | | | | | | | |
| | | 4 | | | | | | | |
| | | 3 | | | | | | | |
| | | 2 | | | | | | | |
| | | 1 | | | | | | | |
| | | 0 | | | | | | | |
| 0e0004 | Rate of error lines-very good | 7 | Rate of very good judgment error lines (HEX, %)<br>Rate of error linesVeryGoodErrorPercent, MCF is transmitted. | - | 0x05 | 0x05 | 0x05 | X1 | 04 |
| | | 6 | | | | | | | |
| | | 5 | | | | | | | |
| | | 4 | | | | | | | |
| | | 3 | | | | | | | |
| | | 2 | | | | | | | |
| | | 1 | | | | | | | |
| | | 0 | | | | | | | |
| 0e0005 | Rate of error lines-good | 7 | Rate of good judgment error lines (HEX, %)<br>VeryGoodErrorPercent<Rate of error linesGoodErrorPercent, RTP is transmitted.<br>Rate of error lines>GoodErrorPercent, RTN is transmitted. | - | 0x0a | 0x0a | 0x0a | X1 | 05 |
| | | 6 | | | | | | | |
| | | 5 | | | | | | | |
| | | 4 | | | | | | | |
| | | 3 | | | | | | | |
| | | 2 | | | | | | | |

| Address | Items | Bit No | Contents | Setting | Default | | | CSRC | |
|---|---|---|---|---|---|---|---|---|---|
| | | | | | Japan | North America | Europe | Command | Parameter |
| | | 1 | | | | | | | |
| | | 0 | | | | | | | |
| 0e0006 | No. of continuous error lines-bad | 7 | No. of bad judgment sequential error lines (HEX) Normal<br>No. of sequential error linesErrorContNormal, MCF is transmitted.<br>No. of sequential error lines>ErrorContNormal, RTN is transmitted. | - | 0x03 | 0x03 | 0x03 | X1 | 06 |
| | | 6 | | | | | | | |
| | | 5 | | | | | | | |
| | | 4 | | | | | | | |
| | | 3 | | | | | | | |
| | | 2 | | | | | | | |
| | | 1 | | | | | | | |
| | | 0 | | | | | | | |
| 0e0007 | No. of continuous error lines-bad | 7 | No. of bad judgment sequential error lines (HEX) Fine<br>No. of sequential error linesErrorContNormal, MCF is transmitted.<br>No. of sequential error lines>ErrorContNormal, RTN is transmitted. | - | 0x06 | 0x06 | 0x06 | X1 | 07 |
| | | 6 | | | | | | | |
| | | 5 | | | | | | | |
| | | 4 | | | | | | | |
| | | 3 | | | | | | | |
| | | 2 | | | | | | | |
| | | 1 | | | | | | | |
| | | 0 | | | | | | | |
| 0e0008 | No. of continuous error lines-bad | 7 | No. of bad judgment sequential error lines (HEX) 300dpi<br>No. of sequential error linesErrorContNormal, MCF is transmitted.<br>No. of sequential error lines>ErrorContNormal, RTN is transmitted. | - | 0x09 | 0x09 | 0x09 | X1 | 08 |
| | | 6 | | | | | | | |
| | | 5 | | | | | | | |
| | | 4 | | | | | | | |
| | | 3 | | | | | | | |
| | | 2 | | | | | | | |
| | | 1 | | | | | | | |
| | | 0 | | | | | | | |
| 0e0009 | No. of continuous error lines-bad | 7 | No. of bad judgment sequential error lines (HEX) Super fine<br>No. of sequential error linesErrorContNormal, MCF is transmitted.<br>No. of sequential error lines>ErrorContNormal, RTN is transmitted. | - | 0x0c | 0x0c | 0x0c | X1 | 09 |
| | | 6 | | | | | | | |
| | | 5 | | | | | | | |
| | | 4 | | | | | | | |
| | | 3 | | | | | | | |
| | | 2 | | | | | | | |
| | | 1 | | | | | | | |
| | | 0 | | | | | | | |
| 0e000a | EP tone addition | 7 | | Utility Mode Special Setting (0,2) | 0x06 | 0x06 | 0x06 | X1 | 0A |
| | | 6 | | | | | | | |
| | | 5 | | | | | | | |
| | | 4 | | | | | | | |
| | | 3 | | | | | | | |
| | | 2 | V.17 | | | | | | |
| | | 1 | | | | | | | |
| | | 0 | V.29 | | | | | | |
| 0e000b | CED detection transmission frequency | 7 | | - | 0x00 | 0x00 | 0x00 | X1 | 0B |
| | | 6 | | | | | | | |
| | | 5 | | | | | | | |
| | | 4 | | | | | | | |
| | | 3 | | | | | | | |
| | | 2 | | | | | | | |
| | | 1 | CED detection<br>0: Detect<br>1: Not detect | | | | | | |
| | | 0 | CED transmission frequency<br>0: 2100Hz | | | | | | |
| 0e000c | TSI/CSI/CIG parameter | 7 | TSI transmission<br>0: No<br>1: Always | - | 0xe0 | 0xe0 | 0xe0 | X1 | 0C |

| Address | Items | Bit No | Contents | Setting | Default | | | CSRC | |
|---|---|---|---|---|---|---|---|---|---|
| | | | | | Japan | North America | Europe | Command | Parameter |
| | | 6 | CSI transmission<br>0: No<br>1: Always | | | | | | |
| | | 5 | CIG transmission<br>0: No<br>1: Always | | | | | | |
| | | 4 | | | | | | | |
| | | 3 | | | | | | | |
| | | 2 | | | | | | | |
| | | 1 | | | | | | | |
| | | 0 | Character ID is put on CSI. | | | | | | |
| 0e000d | G3 Mode Error | 7 | Ph-C8 min. limit timer at Non-ECM<br>0: No<br>1: Yes | Utility Mode Special Setting (6) | 0x00 | 0x00 | 0x44 | X1 | 0D |
| | | 6 | Selection of “-”at dial top<br>0: OFF<br>1: ON | | | | | | |
| | | 5 | RTN reception<br>0: step down<br>1: Line disconnect | | | | | | |
| | | 4 | Remote reception<br>0: ID received<br>1: No limit | | | | | | |
| | | 3 | DIS retransmission interval in manual reception<br>0: 4.5 sec.<br>1: 3.0 sec. | | | | | | |
| | | 2 | DCN transmission at T200 | | | | | | |
| | | 1 | DIS length at reception limited to 4byte<br>0: No limit<br>1: Limit | | | | | | |
| | | 0 | DCN transmitted at stop of ph.C | | | | | | |
| 0e000e | Step up/down | 7 | Strict TCF check<br>0: Normal<br>1: Strict check | - | 0x00 | 0x00 | 0x00 | X1 | 0E |
| | | 6 | | | | | | | |
| | | 5 | | | | | | | |
| | | 4 | | | | | | | |
| | | 3 | | | | | | | |
| | | 2 | | | | | | | |
| | | 1 | | | | | | | |
| | | 0 | The PC/BC of the PostMsg is checked while in the ECM reception.<br>0: Yes<br>1: No | | | | | | |
| 0e000f | Delay timer between DCS-TCF | 7 | DCS - TCF delay timer Unit: (10 ms, HEX) | Utility Mode Special Setting | 0x08 | 0x08 | 0x08 | X1 | 0F |
| | | 6 | | | | | | | |
| | | 5 | | | | | | | |
| | | 4 | | | | | | | |
| | | 3 | | | | | | | |
| | | 2 | | | | | | | |
| | | 1 | | | | | | | |
| | | 0 | | | | | | | |

### 5.24.8 0e001#

| Address | Items | Bit No | Contents | Setting | Default | | | CSRC | |
|---|---|---|---|---|---|---|---|---|---|
| | | | | | Japan | North America | Europe | Command | Parameter |
| 0e0010 | Delay timer between PIXPMC | 7 | PIX - PMC delay timer (Unit: 10 ms, HEX) | Utility Mode Special Setting | 0x08 | 0x08 | 0x08 | X1 | 10 |
| | | 6 | | | | | | | |
| | | 5 | | | | | | | |
| | | 4 | | | | | | | |
| | | 3 | | | | | | | |
| | | 2 | | | | | | | |
| | | 1 | | | | | | | |
| | | 0 | | | | | | | |
| 0e0011 | Delay timer between CED-DIS | 7 | CED - DIS delay timer Unit: (10 ms, HEX) | Utility Mode Special Setting | 0x08 | 0x08 | 0x08 | X1 | 11 |
| | | 6 | | | | | | | |
| | | 5 | | | | | | | |
| | | 4 | | | | | | | |
| | | 3 | | | | | | | |
| | | 2 | | | | | | | |
| | | 1 | | | | | | | |
| | | 0 | | | | | | | |
| 0e0012 | T1 timer for calling | 7 | T1 timer for transmission (Unit: 1 sec, HEX) | Utility Mode Special Setting | 0x23 | 0x23 | 0x23 | X1 | 12 |
| | | 6 | | | | | | | |
| | | 5 | | | | | | | |
| | | 4 | | | | | | | |
| | | 3 | | | | | | | |
| | | 2 | | | | | | | |
| | | 1 | | | | | | | |
| | | 0 | | | | | | | |
| 0e0013 | T1 timer for called | 7 | T1 timer for reception (Unit: 1 sec, HEX) | Utility Mode Special Setting | 0x23 | 0x23 | 0x23 | X1 | 13 |
| | | 6 | | | | | | | |
| | | 5 | | | | | | | |
| | | 4 | | | | | | | |
| | | 3 | | | | | | | |
| | | 2 | | | | | | | |
| | | 1 | | | | | | | |
| | | 0 | | | | | | | |
| 0e0014 | ph.C reception limited time | 7 | Max. reception time per page (Unit: min, HEX) 1 to 255 min. | - | 0x0f | 0x0f | 0x0f | X1 | 14 |
| | | 6 | | | | | | | |
| | | 5 | | | | | | | |
| | | 4 | | | | | | | |
| | | 3 | | | | | | | |
| | | 2 | | | | | | | |
| | | 1 | | | | | | | |
| | | 0 | | | | | | | |
| 0e0015 | Timer between EOLs | 7 | EOL - EOL timer (Unit: 100 ms, HEX) | Utility Mode Special Setting | 0x82 | 0x82 | 0x82 | X1 | 15 |
| | | 6 | | | | | | | |
| | | 5 | | | | | | | |
| | | 4 | | | | | | | |
| | | 3 | | | | | | | |
| | | 2 | | | | | | | |
| | | 1 | | | | | | | |
| | | 0 | | | | | | | |
| 0e0016 | Timer between frames | 7 | Timer between frames (Unit: 1 sec, HEX) | - | 0x23 | 0x23 | 0x23 | X1 | 16 |
| | | 6 | | | | | | | |
| | | 5 | | | | | | | |
| | | 4 | | | | | | | |
| | | 3 | | | | | | | |
| | | 2 | | | | | | | |

| Address | Items | Bit No | Contents | Setting | Default | | | CSRC | |
|---|---|---|---|---|---|---|---|---|---|
| | | | | | Japan | North America | Europe | Command | Parameter |
| | | 1 | | | | | | | |
| | | 0 | | | | | | | |
| 0e0017 | ANSam signal transmission time | 7 | ANSam signal transmission time (Unit: 100 ms, HEX) | Utility Mode Special Setting | 0x28 | 0x28 | 0x28 | X1 | 17 |
| | | 6 | | | | | | | |
| | | 5 | | | | | | | |
| | | 4 | | | | | | | |
| | | 3 | | | | | | | |
| | | 2 | | | | | | | |
| | | 1 | | | | | | | |
| | | 0 | | | | | | | |
| 0e0018 | Ci signal transmission time | 7 | Ci signal transmission time (Unit: 100 ms, HEX) | - | 0x05 | 0x05 | 0x05 | X1 | 18 |
| | | 6 | | | | | | | |
| | | 5 | | | | | | | |
| | | 4 | | | | | | | |
| | | 3 | | | | | | | |
| | | 2 | | | | | | | |
| | | 1 | | | | | | | |
| | | 0 | | | | | | | |
| 0e0019 | High-speed signal transmission waiting delay timer | 7 | High-speed signal transmission waiting delay timer (Unit: 10 ms, HEX) (Between CFRPIX/MPS-PIX/CTR-PIX) | - | 0x37 | 0x37 | 0x37 | X1 | 19 |
| | | 6 | | | | | | | |
| | | 5 | | | | | | | |
| | | 4 | | | | | | | |
| | | 3 | | | | | | | |
| | | 2 | | | | | | | |
| | | 1 | | | | | | | |
| | | 0 | | | | | | | |
| 0e001a | ph.C top dummy data transmitting time | 7 | ph.C top dummy data transmission time (Unit: 100 ms, HEX) (Dummy data for non-ECM / Preamble at ECM) | - | 0x04 | 0x04 | 0x04 | X1 | 1A |
| | | 6 | | | | | | | |
| | | 5 | | | | | | | |
| | | 4 | | | | | | | |
| | | 3 | | | | | | | |
| | | 2 | | | | | | | |
| | | 1 | | | | | | | |
| | | 0 | | | | | | | |
| 0e001b | RTC Counter | 7 | | - | 0x01 | 0x01 | 0x01 | X1 | 1B |
| | | 6 | | | | | | | |
| | | 5 | | | | | | | |
| | | 4 | | | | | | | |
| | | 3 | | | | | | | |
| | | 2 | The EOL counter judged to be RTC<br>000: EOL*2<br>001: EOL*3<br>010: EOL*4<br>011: EOL*5<br>100: EOL*6 | | | | | | |
| | | 1 | | | | | | | |
| | | 0 | | | | | | | |
| 0e001c | Closed area communication | 7 | | - | 0x00 | 0x00 | 0x00 | X1 | 1C |
| | | 6 | | | | | | | |
| | | 5 | | | | | | | |
| | | 4 | | | | | | | |
| | | 3 | | | | | | | |
| | | 2 | Polling TX | | | | | | |
| | | 1 | Polling RX | | | | | | |
| | | 0 | | | | | | | |
| 0e001d - 0e001f | Machine password [20] | 7 | ASCII [20]<br>When ID is less than 20 digits, justify to the left and insert space at the top. (No NULL terminator) | Utility Mode | ALL 0x20 | ALL 0x20 | ALL 0x20 | X1 | 1D - 1F |
| | | 6 | | | | | | | |
| | | 5 | | | | | | | |

| Address | Items | Bit No | Contents | Setting | Default | | | CSRC | |
|---|---|---|---|---|---|---|---|---|---|
| | | | | | Japan | North America | Europe | Command | Parameter |
| | | 4 | | | | | | | |
| | | 3 | | | | | | | |
| | | 2 | | | | | | | |
| | | 1 | | | | | | | |
| | | 0 | | | | | | | |

### 5.24.9 0e002#

| Address | Items | Bit No | Contents | Setting | Default | | | CSRC | |
|---|---|---|---|---|---|---|---|---|---|
| | | | | | Japan | North America | Europe | Command | Parameter |
| 0e0020 - 0e002f | Machine password [20] | 7 | ASCII [20]<br>When ID is less than 20 digits, justify to the left and insert space at the top. (No NULL terminator) | Utility Mode | ALL 0x20 | ALL 0x20 | ALL 0x20 | X1 | 20 - 2F |
| | | 6 | | | | | | | |
| | | 5 | | | | | | | |
| | | 4 | | | | | | | |
| | | 3 | | | | | | | |
| | | 2 | | | | | | | |
| | | 1 | | | | | | | |
| | | 0 | | | | | | | |

### 5.24.10 0e003#

| Address | Items | Bit No | Contents | Setting | Default | | | CSRC | |
|---|---|---|---|---|---|---|---|---|---|
| | | | | | Japan | North America | Europe | Command | Parameter |
| 0e0030 | Machine password [20] | 7 | ASCII [20]<br>When ID is less than 20 digits, justify to the left and insert space at the top. (No NULL terminator) | Utility Mode | 0x20 | 0x20 | 0x20 | X1 | 30 |
| | | 6 | | | | | | | |
| | | 5 | | | | | | | |
| | | 4 | | | | | | | |
| | | 3 | | | | | | | |
| | | 2 | | | | | | | |
| | | 1 | | | | | | | |
| | | 0 | | | | | | | |
| 0e0031 - 0e003f | CSRC password [20] | 7 | ASCII [20]<br>When ID is less than 20 digits, justify to the left and insert space at the top. (No NULL terminators) | - | ALL 0x20 | ALL 0x20 | ALL 0x20 | X1 | 31 - 3F |
| | | 6 | | | | | | | |
| | | 5 | | | | | | | |
| | | 4 | | | | | | | |
| | | 3 | | | | | | | |
| | | 2 | | | | | | | |
| | | 1 | | | | | | | |
| | | 0 | | | | | | | |

### 5.24.11 0e004#

| Address | Items | Bit No | Contents | Setting | Default | | | CSRC | |
|---|---|---|---|---|---|---|---|---|---|
| | | | | | Japan | North America | Europe | Command | Parameter |
| 0e0040 - 0e0044 | CSRC password [20] | 7 | ASCII [20]<br>When ID is less than 20 digits, justify to the left and insert space at the top. (No NULL terminators) | - | ALL 0x20 | ALL 0x20 | ALL 0x20 | X1 | 40 - 44 |
| | | 6 | | | | | | | |
| | | 5 | | | | | | | |
| | | 4 | | | | | | | |
| | | 3 | | | | | | | |
| | | 2 | | | | | | | |
| | | 1 | | | | | | | |
| | | 0 | | | | | | | |

| Address | Items | Bit No | Contents | Setting | Default | | | CSRC | |
|---|---|---|---|---|---|---|---|---|---|
| | | | | | Japan | North America | Europe | Command | Parameter |
| 0e0045 | Watch dog | 7 | | Utility Mode Special Setting (0) | 0x01 | 0x01 | 0x01 | X1 | 45 |
| | | 6 | | | | | | | |
| | | 5 | | | | | | | |
| | | 4 | | | | | | | |
| | | 3 | | | | | | | |
| | | 2 | | | | | | | |
| | | 1 | | | | | | | |
| | | 0 | Watch dog<br>0: OFF<br>1: ON | | | | | | |
| 0e0046 | T2 timer after CFR | 7 | T2 timer value after CFR x100 ms (HEX) | Utility Mode Special Setting | 0x3c | 0x3c | 0x3c | X1 | 46 |
| | | 6 | | | | | | | |
| | | 5 | | | | | | | |
| | | 4 | | | | | | | |
| | | 3 | | | | | | | |
| | | 2 | | | | | | | |
| | | 1 | | | | | | | |
| | | 0 | | | | | | | |
| 0e0047 | T2 timer after EOM | 7 | T2 timer after EOM x100ms (HEX) | Utility Mode Special Setting | 0x37 | 0x37 | 0x37 | X1 | 47 |
| | | 6 | | | | | | | |
| | | 5 | | | | | | | |
| | | 4 | | | | | | | |
| | | 3 | | | | | | | |
| | | 2 | | | | | | | |
| | | 1 | | | | | | | |
| | | 0 | | | | | | | |
| 0e0048 | JIM waiting timer | 7 | JM waiting timer value x100ms (HEX) | Utility Mode Special Setting | 0x5a | 0x5a | 0x5a | X1 | 48 |
| | | 6 | | | | | | | |
| | | 5 | | | | | | | |
| | | 4 | | | | | | | |
| | | 3 | | | | | | | |
| | | 2 | | | | | | | |
| | | 1 | | | | | | | |
| | | 0 | | | | | | | |
| 0e0049 | Destination | 7 | 0: US<br>1: Canada<br>2: Japan<br>3: Australia<br>4: New Zealand<br>5: Europe<br>6: Germany<br>7: UK<br>8: France<br>9: Switzerland<br>0A: Netherlands<br>0B: Belgium<br>0C: Australia<br>0D: Norway<br>0E: Sweden<br>0F: Finland<br>10: Ireland<br>11: Denmark<br>12: Italy<br>13: Spain<br>14: Portugal<br>15: Poland<br>16: South Africa<br>17: Taiwan<br>18: Saudi Arabia<br>19: China<br>1A: Malaysia<br>1B: Singapore<br>1C: Korea | Service Mode | 0x02 | 0x00 | 0x05 | X1 | 49 |
| | | 6 | | | | | | | |
| | | 5 | | | | | | | |
| | | 4 | | | | | | | |
| | | 3 | | | | | | | |
| | | 2 | | | | | | | |
| | | 1 | | | | | | | |

| Address | Items | Bit No | Contents | Setting | Default | | | CSRC | |
|---|---|---|---|---|---|---|---|---|---|
| | | | | | Japan | North America | Europe | Command | Parameter |
| | | 0 | 1D: Hong Kong<br>1E: Generic (OT)<br>1F: Argentina<br>20: Brazil<br>21: Vietnam<br>22: Philippines<br>23: Russia | | | | | | |
| 0e004a | Function when DIS signal is created | 7 | | - | 0x01 | 0x01 | 0x01 | X1 | 4A |
| | | 6 | | | | | | | |
| | | 5 | | | | | | | |
| | | 4 | | | | | | | |
| | | 3 | | | | | | | |
| | | 2 | | | | | | | |
| | | 1 | Change-over of the silent interval between ANSam and DIS (For revision T.30)<br>0: Silent interval of 450 ms<br>1: 75 ms | | | | | | |
| | | 0 | V8 capability, if available, of DIS to transmit with V.21<br>0: V.8 bit ON<br>1: V.8 bit OFF | | | | | | |
| 0e004b | Signal check at the time of F code communication | 7 | | - | 0x00 | 0x00 | 0x00 | X1 | 4B |
| | | 6 | | | | | | | |
| | | 5 | | | | | | | |
| | | 4 | | | | | | | |
| | | 3 | | | | | | | |
| | | 2 | | | | | | | |
| | | 1 | | | | | | | |
| | | 0 | Check of PWD and SID received signal in F code communication<br>0: Signal checked<br>1: PWD and SID not distinguished | | | | | | |
| 0e004c | No. of CI signal transmission in manual transmission | 7 | CI signal repetitive transmission frequency when no ANSam received after CI transmission (times, HEX) | - | 0x03 | 0x03 | 0x03 | X1 | 4C |
| | | 6 | | | | | | | |
| | | 5 | | | | | | | |
| | | 4 | | | | | | | |
| | | 3 | | | | | | | |
| | | 2 | | | | | | | |
| | | 1 | | | | | | | |
| | | 0 | | | | | | | |
| 0e004d | Tone detection time (PB) | 7 | PB OFF time integration 0 to 15 (x10ms) (50ms if 0) | - | 0x55 | 0x55 | 0x55 | X1 | 4D |
| | | 6 | | | | | | | |
| | | 5 | | | | | | | |
| | | 4 | | | | | | | |
| | | 3 | PB ON time integration 0 to 15 (x10ms) (50ms if 0) | | | | | | |
| | | 2 | | | | | | | |
| | | 1 | | | | | | | |
| | | 0 | | | | | | | |
| 0e004e | Time for modem response waiting timeout | 7 | Waiting event from modem/ Response waiting timeout time (x10sec, HEX) (0 counted as 90 sec.) | - | 0x00 | 0x00 | 0x00 | X1 | 4E |
| | | 6 | | | | | | | |
| | | 5 | | | | | | | |
| | | 4 | | | | | | | |
| | | 3 | | | | | | | |
| | | 2 | | | | | | | |
| | | 1 | | | | | | | |
| | | 0 | | | | | | | |
| 0e004f | Continuous CRP reception frequency resulting in an error | 7 | Sequential CRP reception frequency resulting in error (x1 time, HEX) (0 counted as 3 times) | - | 0x00 | 0x00 | 0x00 | X1 | 4F |
| | | 6 | | | | | | | |

| Address | Items | Bit No | Contents | Setting | Default | | | CSRC | |
|---|---|---|---|---|---|---|---|---|---|
| | | | | | Japan | North America | Europe | Command | Parameter |
| | | 5 | | | | | | | |
| | | 4 | | | | | | | |
| | | 3 | | | | | | | |
| | | 2 | | | | | | | |
| | | 1 | | | | | | | |
| | | 0 | | | | | | | |

### 5.24.12 0e005#

| Address | Items | Bit No | Contents | Setting | Default | | | CSRC | |
|---|---|---|---|---|---|---|---|---|---|
| | | | | | Japan | North America | Europe | Command | Parameter |
| 0e0050 | 1300Hz line seizure parameter detection time | 7 | 1300Hz tone detection time for no-ringing reception (x100ms, HEX) | - | 0x17 | 0x17 | 0x17 | X1 | 50 |
| | | 6 | | | | | | | |
| | | 5 | | | | | | | |
| | | 4 | | | | | | | |
| | | 3 | | | | | | | |
| | | 2 | | | | | | | |
| | | 1 | | | | | | | |
| | | 0 | | | | | | | |
| 0e0051 | 1300 Hz tone detection frequency pattern | 7 | | - | 0x00 | 0x00 | 0x00 | X1 | 51 |
| | | 6 | | | | | | | |
| | | 5 | | | | | | | |
| | | 4 | | | | | | | |
| | | 3 | | | | | | | |
| | | 2 | | | | | | | |
| | | 1 | | | | | | | |
| | | 0 | 1300 Hz tone detection frequency pattern<br>00: 1300 Hz ±30 Hz<br>01: 1300 Hz ±10Hz | | | | | | |
| 0e0052 | German specifications | 7 | Custom Mode (clears the FP overwrite of the error line relationship for EU destinations) | - | 0x00 | 0x00 | 0x0f | X1 | 52 |
| | | 6 | | | | | | | |
| | | 5 | | | | | | | |
| | | 4 | | | | | | | |
| | | 3 | ERR transmission (DTS sequence) | | | | | | |
| | | 2 | DCN reception error ignored | | | | | | |
| | | 1 | Line disconnected within 6 sec. after CD OFF in ph.C | | | | | | |
| | | 0 | Line disconnected upon reception of DIS to DTC | | | | | | |
| 0e0053 | Retransmission intervals of DIS (Auto reception) | 7 | DIS re-transmission interval in automatic reception (x0.1 sec.) | - | 0x1e | 0x1e | 0x1e | X1 | 53 |
| | | 6 | | | | | | | |
| | | 5 | | | | | | | |
| | | 4 | | | | | | | |
| | | 3 | | | | | | | |
| | | 2 | | | | | | | |
| | | 1 | | | | | | | |
| | | 0 | | | | | | | |
| 0e0054 | TTI for transmission | 7 | | - | 0x03 | 0x03 | 0x03 | X1 | 54 |
| | | 6 | | | | | | | |
| | | 5 | | | | | | | |
| | | 4 | | | | | | | |
| | | 3 | | | | | | | |
| | | 2 | | | | | | | |

| Address | Items | Bit No | Contents | Setting | Default | | | CSRC | |
|---|---|---|---|---|---|---|---|---|---|
| | | | | | Japan | North America | Europe | Command | Parameter |
| | | 1<br>0 | TTI in transmission TTI added<br>00: OFF<br>01: (OFF)<br>10: INSIDE<br>11: OUTSIDE | | | | | | |
| 0e0055 | Image reduction parameter | 7<br>6<br>5<br>4<br>3<br>2<br>1 | | - | 0x00 | 0x00 | 0x00 | X1 | 55 |
| | | 0 | Reduction parameter in main scanning direction<br>0: Thick line kept<br>1: Thick line not kept | | | | | | |
| 0e0056 | Main body polling transmission command wait timer | 7<br>6<br>5<br>4<br>3<br>2<br>1<br>0 | Timer for waiting a transmission command (+FDT) from the main body during turnaround of polling transmission (x100ms, HEX) (0 is defaulted to 8 sec.) | - | 0x08 | 0x08 | 0x08 | X1 | 56 |
| 0e0057 | Guaranteed time to switch post message command receive modes | 7<br>6<br>5<br>4<br>3<br>2<br>1<br>0 | Guaranteed time to switch post message command receive modes (1-ms increments, HEX)<br>*Translated to 50 ms when the value is "0". | - | 0x00 | 0x00 | 0x00 | X1 | 57 |
| 0e0058 - | Reserved area | 7<br>6<br>5<br>4<br>3<br>2<br>1<br>0 | | - | ALL 0x00 | ALL 0x00 | ALL 0x00 | X1 | 58 - |

### 5.24.13 12000#

| Address | Items | Bit No | Contents | Setting | Default | | | CSRC | |
|---|---|---|---|---|---|---|---|---|---|
| | | | | | Japan | North America | Europe | Command | Parameter |
| 120000 | TTI/RTI setting | 7 | | Utility Mode (0, 1, 4) | 0x03 | 0x03 | 0x03 | X2 | 80 |
| | | 6 | SW for prohibiting the printing of the TTI address<br>0: Printing of the address allowed<br>1: Printing of the address not allowed | | | | | | |
| | | 5<br>4 | RTI addition<br>00:OFF<br>01: (OFF)<br>10: INSIDE<br>11: OUTSIDE | | | | | | |
| | | 3 | TTI denominator display<br>0: Total<br>1: Individual | | | | | | |

| Address | Items | Bit No | Contents | Setting | Default | | | CSRC | |
|---|---|---|---|---|---|---|---|---|---|
| | | | | | Japan | North America | Europe | Command | Parameter |
| | | 2 | Inhibition of TTI setting menu INSIDE display<br>0: No<br>1: Yes | | | | | | |
| | | 1 | | | | | | | |
| | | 0 | | | | | | | |
| 120001 | Report setting 1 | 7 | | Utility Mode (2-5)<br>Utility Mode Special Setting (6) | 6c | 6c | 6c | X2 | 81 |
| | | 6 | Addition of image<br>0: No<br>1: Yes | | | | | | |
| | | 5 | Automatic output of reserved report<br>0: No<br>1: Yes | | | | | | |
| | | 4 | TX result report<br>00: Not output<br>01: Output only at errors<br>10: Always output<br>11: (Normal output) | | | | | | |
| | | 3 | | | | | | | |
| | | 2 | Automatic output of sequential communication report<br>0: No<br>1: Yes | | | | | | |
| | | 1 | | | | | | | |
| | | 0 | | | | | | | |
| 120002 | Report setting 2 | 7 | The FAX CSRC communication log is printed on the Activity Report<br>0: No<br>1: Yes | Utility Mode (0-2)<br>Utility Mode Special Setting (0,1) | 0x04 | 0x04 | 0x04 | X2 | 82 |
| | | 6 | | | | | | | |
| | | 5 | | | | | | | |
| | | 4 | | | | | | | |
| | | 3 | Automatic daily output of journal<br>0: No<br>1: Yes | | | | | | |
| | | 2 | Automatic output of journal 100 communication<br>0: No<br>1: Yes | | | | | | |
| | | 1 | Automatic output or error trace list<br>0: No<br>1: Yes | | | | | | |
| | | 0 | Automatic output of trace list<br>0: No<br>1: Yes | | | | | | |
| 120003 | Output time of daily automatic output of journal (hour: grade of 10) | 7 | Designation of 24 hours ASCII four digit | - | 0x30 | 0x30 | 0x30 | X2 | 83 |
| | | 6 | | | | | | | |
| | | 5 | | | | | | | |
| | | 4 | | | | | | | |
| | | 3 | | | | | | | |
| | | 2 | | | | | | | |
| | | 1 | | | | | | | |
| | | 0 | | | | | | | |
| 120004 | Output time of daily automatic output of journal (hour: grade of 1) | 7 | Designation of 24 hours ASCII four digit | - | 0x39 | 0x39 | 0x39 | X2 | 84 |
| | | 6 | | | | | | | |
| | | 5 | | | | | | | |
| | | 4 | | | | | | | |
| | | 3 | | | | | | | |
| | | 2 | | | | | | | |
| | | 1 | | | | | | | |
| | | 0 | | | | | | | |

| Address | Items | Bit No | Contents | Setting | Default | | | CSRC | |
|---|---|---|---|---|---|---|---|---|---|
| | | | | | Japan | North America | Europe | Command | Parameter |
| 120005 | Output time of daily automatic output of journal (minute: grade of 10) | 7 | Designation of 24 hours ASCII four digit | - | 0x30 | 0x30 | 0x30 | X2 | 85 |
| | | 6 | | | | | | | |
| | | 5 | | | | | | | |
| | | 4 | | | | | | | |
| | | 3 | | | | | | | |
| | | 2 | | | | | | | |
| | | 1 | | | | | | | |
| | | 0 | | | | | | | |
| 120006 | Output time of daily automatic output of journal (minute: grade of 1) | 7 | Designation of 24 hours ASCII four digit | - | 0x30 | 0x30 | 0x30 | X2 | 86 |
| | | 6 | | | | | | | |
| | | 5 | | | | | | | |
| | | 4 | | | | | | | |
| | | 3 | | | | | | | |
| | | 2 | | | | | | | |
| | | 1 | | | | | | | |
| | | 0 | | | | | | | |
| 120007 | Output settings | 7 | Setting of daily difference for daily mode set for automatic output<br>0: Daily difference not limited<br>1: Daily difference limited | Utility Mode (3-5)<br>Utility Mode Special Setting (0) | 0x00 | 0x00 | 0x00 | X2 | 87 |
| | | 6 | | | | | | | |
| | | 5 | Transmission result report selection screen<br>0: Not displayed<br>1: Displayed | | | | | | |
| | | 4 | Broadcast result report output method<br>0: All destinations<br>1: 1Each destination | | | | | | |
| | | 3 | | | | | | | |
| | | 2 | Output order of journal transmission result reservation report<br>0: From old one<br>1: From new one | | | | | | |
| | | 1 | | | | | | | |
| | | 0 | | | | | | | |
| 120008 | Invisible mode | 7 | | - | 0x00 | 0x00 | 0x00 | X2 | 88 |
| | | 6 | | | | | | | |
| | | 5 | | | | | | | |
| | | 4 | | | | | | | |
| | | 3 | | | | | | | |
| | | 2 | Display of PCFAX TX [PC] in Note of report<br>0: No<br>1: Yes | | | | | | |
| | | 1 | | | | | | | |
| | | 0 | Details of remote station display during program direct registered calls and abbreviated dialing<br>0: Display of registered name<br>1: Display of number | | | | | | |
| 120009 | Reserved area | 7 | | - | 0x00 | 0x00 | 0x00 | X2 | 89 |
| | | 6 | | | | | | | |
| | | 5 | | | | | | | |
| | | 4 | | | | | | | |
| | | 3 | | | | | | | |
| | | 2 | | | | | | | |
| | | 1 | | | | | | | |
| | | 0 | | | | | | | |

| Address | Items | Bit No | Contents | Setting | Default | | | CSRC | |
|---|---|---|---|---|---|---|---|---|---|
| | | | | | Japan | North America | Europe | Command | Parameter |
| 12000b | F code report setting | 7 | | Utility Mode (0-3) | 0x0f | 0x0f | 0x0f | X2 | 8B |
| | | 6 | | | | | | | |
| | | 5 | | | | | | | |
| | | 4 | | | | | | | |
| | | 3 | Relay request report output<br>0: No<br>1: Yes | | | | | | |
| | | 2 | Relay TX result report output<br>0: No<br>1: Yes | | | | | | |
| | | 1 | Bulletin polling transmission report output<br>0: No<br>1: Yes | | | | | | |
| | | 0 | Confidential reception report output<br>0: No<br>1: Yes | | | | | | |
| 12000c | Internet Fax report Setting | 7 | | Utility Mode | 0x61 | 0x61 | 0x61 | X2 | 8C |
| | | 6 | Network Fax RX Error Report<br>0: OFF<br>1: ON | | | | | | |
| | | 5 | Internet Broadcast Fax Result Report<br>0: OFF<br>1: ON | | | | | | |
| | | 4 | | | | | | | |
| | | 3 | E-Mail Message Body printing<br>0: ON<br>1: OFF | | | | | | |
| | | 2 | TX Error Report printing<br>0: ON<br>1: OFF | | | | | | |
| | | 1 | MDN Message printing<br>0: ON<br>1: OFF | | | | | | |
| | | 0 | DSN Message printing<br>0: ON<br>1: OFF | | | | | | |
| 12000d | FAX report setting | 7 | | Utility Mode | 0x00 | 0x00 | 0x00 | X2 | 8D |
| | | 6 | | | | | | | |
| | | 5 | | | | | | | |
| | | 4 | | | | | | | |
| | | 3 | | | | | | | |
| | | 2 | | | | | | | |
| | | 1 | PC-Fax Error report output<br>0: No<br>1: Yes | | | | | | |
| | | 0 | Relay print<br>0: No<br>1: Yes | | | | | | |
| 12000e - 12000f | Reserved area | 7 | | - | 0x00 | 0x00 | 0x00 | X2 | 8E - 8F |
| | | 6 | | | | | | | |
| | | 5 | | | | | | | |
| | | 4 | | | | | | | |
| | | 3 | | | | | | | |
| | | 2 | | | | | | | |
| | | 1 | | | | | | | |
| | | 0 | | | | | | | |

### 5.24.14 13000#

| Address | Items | Bit No | Contents | Setting | Default | | | CSRC | |
|---|---|---|---|---|---|---|---|---|---|
| | | | | | Japan | North America | Europe | Command | Parameter |
| 130000 | Reserved area | 7 | | - | - | - | - | XE | 00 |
| | | 6 | | | | | | | |
| | | 5 | | | | | | | |
| | | 4 | | | | | | | |
| | | 3 | | | | | | | |
| | | 2 | | | | | | | |
| | | 1 | | | | | | | |
| | | 0 | | | | | | | |
| 130001 | FAX scan HP2 | 7 | Frame erasure HP<br>01: 5 mm<br>10: 10 mm<br>11: 15 mm | - | 0x41 | 0x41 | 0x41 | XE | 01 |
| | | 6 | | | | | | | |
| | | 5 | | | | | | | |
| | | 4 | | | | | | | |
| | | 3 | | | | | | | |
| | | 2 | | | | | | | |
| | | 1 | | | | | | | |
| | | 0 | | | | | | | |
| 130002 | FAX scan HP3 | 7 | | - | 0x04 | 0x04 | 0x04 | XE | 02 |
| | | 6 | | | | | | | |
| | | 5 | | | | | | | |
| | | 4 | | | | | | | |
| | | 3 | | | | | | | |
| | | 2 | Original reading mode<br>00: Normal<br>01: Mixed size<br>10: DF irregular | | | | | | |
| | | 1 | | | | | | | |
| | | 0 | Page transfer read mode<br>0: Scans from the left<br>1: Scans from the right | | | | | | |
| 130003 | Reserved area | 7 | | - | - | - | - | XE | 03 |
| | | 6 | | | | | | | |
| | | 5 | | | | | | | |
| | | 4 | | | | | | | |
| | | 3 | | | | | | | |
| | | 2 | | | | | | | |
| | | 1 | | | | | | | |
| | | 0 | | | | | | | |
| 130004 | Reserved area | 7 | | - | - | - | - | XE | 04 |
| | | 6 | | | | | | | |
| | | 5 | | | | | | | |
| | | 4 | | | | | | | |
| | | 3 | | | | | | | |
| | | 2 | | | | | | | |
| | | 1 | | | | | | | |
| | | 0 | | | | | | | |
| 130005 | Reserved area | 7 | | - | - | - | - | XE | 05 |
| | | 6 | | | | | | | |
| | | 5 | | | | | | | |
| | | 4 | | | | | | | |
| | | 3 | | | | | | | |
| | | 2 | | | | | | | |
| | | 1 | | | | | | | |
| | | 0 | | | | | | | |
| 130006 | Reserved area | 7 | | - | - | - | - | XE | 06 |
| | | 6 | | | | | | | |

| Address | Items | Bit No | Contents | Setting | Default | | | CSRC | |
|---|---|---|---|---|---|---|---|---|---|
| | | | | | Japan | North America | Europe | Command | Parameter |
| | | 5 | | | | | | | |
| | | 4 | | | | | | | |
| | | 3 | | | | | | | |
| | | 2 | | | | | | | |
| | | 1 | | | | | | | |
| | | 0 | | | | | | | |
| 130007 | HP for FAX main screen | 7 | FAX main screen selection<br>0000: Program<br>0001: Group<br>0010: Abbreviation<br>0011: Keypad<br>0100: i-Fax | - | 0x09 | 0x09 | 0x09 | XE | 07 |
| | | 6 | | | | | | | |
| | | 5 | | | | | | | |
| | | 4 | | | | | | | |
| | | 3 | Automatic screen switching at the time of reception<br>0: ON<br>1:OFF | | | | | | |
| | | 2 | | | | | | | |
| | | 1 | | | | | | | |
| | | 0 | | | | | | | |
| 130008 | Rotation setting HP | 7 | | - | 0x03 | 0x03 | 0x03 | XE | 08 |
| | | 6 | | | | | | | |
| | | 5 | | | | | | | |
| | | 4 | | | | | | | |
| | | 3 | | | | | | | |
| | | 2 | | | | | | | |
| | | 1 | Letter<br>0: No<br>1: Yes | | | | | | |
| | | 0 | A4<br>0: No<br>1: Yes | | | | | | |
| 130009 | Reserved area | 7 | | - | - | - | - | XE | 09 |
| | | 6 | | | | | | | |
| | | 5 | | | | | | | |
| | | 4 | | | | | | | |
| | | 3 | | | | | | | |
| | | 2 | | | | | | | |
| | | 1 | | | | | | | |
| | | 0 | | | | | | | |
| 13000a | Not used | 7 | | - | - | - | - | XE | 0A |
| | | 6 | | | | | | | |
| | | 5 | | | | | | | |
| | | 4 | | | | | | | |
| | | 3 | | | | | | | |
| | | 2 | | | | | | | |
| | | 1 | | | | | | | |
| | | 0 | | | | | | | |
| 13000b | Error display time | 7 | 10 - 250 seconds<br>0: Error display HOLD | - | 0x14 | 0x14 | 0x14 | XE | 0B |
| | | 6 | | | | | | | |
| | | 5 | | | | | | | |
| | | 4 | | | | | | | |
| | | 3 | | | | | | | |
| | | 2 | | | | | | | |
| | | 1 | | | | | | | |
| | | 0 | | | | | | | |
| 13000c | Reserved area | 7 | | - | - | - | - | XE | 0C |
| | | 6 | | | | | | | |
| | | 5 | | | | | | | |

| Address | Items | Bit No | Contents | Setting | Default | | | CSRC | |
|---|---|---|---|---|---|---|---|---|---|
| | | | | | Japan | North America | Europe | Command | Parameter |
| | | 4 | | | | | | | |
| | | 3 | | | | | | | |
| | | 2 | | | | | | | |
| | | 1 | | | | | | | |
| | | 0 | | | | | | | |
| 13000d | Reserved area | 7 | | - | - | - | - | XE | 0D |
| | | 6 | | | | | | | |
| | | 5 | | | | | | | |
| | | 4 | | | | | | | |
| | | 3 | | | | | | | |
| | | 2 | | | | | | | |
| | | 1 | | | | | | | |
| | | 0 | | | | | | | |
| 13000e - 13000f | Reserved area | 7 | | - | ALL 0x00 | ALL 0x00 | ALL 0x00 | XE | 0E - 0F |
| | | 6 | | | | | | | |
| | | 5 | | | | | | | |
| | | 4 | | | | | | | |
| | | 3 | | | | | | | |
| | | 2 | | | | | | | |
| | | 1 | | | | | | | |
| | | 0 | | | | | | | |

### 5.24.15 13001#, 13002#

| Address | Items | Bit No | Contents | Setting | Default | | | CSRC | |
|---|---|---|---|---|---|---|---|---|---|
| | | | | | Japan | North America | Europe | Command | Parameter |
| 130010 - 13002f | Reserved area | 7 | | - | ALL 0x00 | ALL 0x00 | ALL 0x00 | XE | 10 - 2F |
| | | 6 | | | | | | | |
| | | 5 | | | | | | | |
| | | 4 | | | | | | | |
| | | 3 | | | | | | | |
| | | 2 | | | | | | | |
| | | 1 | | | | | | | |
| | | 0 | | | | | | | |

### 5.24.16 13003#

| Address | Items | Bit No | Contents | Setting | Default | | | CSRC | |
|---|---|---|---|---|---|---|---|---|---|
| | | | | | Japan | North America | Europe | Command | Parameter |
| 130030 - 130034 | Reserved area | 7 | | - | ALL 0x00 | ALL 0x00 | ALL 0x00 | XE | 30 - 34 |
| | | 6 | | | | | | | |
| | | 5 | | | | | | | |
| | | 4 | | | | | | | |
| | | 3 | | | | | | | |
| | | 2 | | | | | | | |
| | | 1 | | | | | | | |
| | | 0 | | | | | | | |
| 130035 | Utility Mode display setting | 7 | Relay display<br>0: Yes<br>1: No | Utility Mode Special Setting | 0x00 | 0x0b | 0x0b | XE | 35 |
| | | 6 | | | | | | | |
| | | 5 | Incomplete TX hold display<br>0: Yes<br>1: No | | | | | | |

| Address | Items | Bit No | Contents | Setting | Default | | | CSRC | |
|---|---|---|---|---|---|---|---|---|---|
| | | | | | Japan | North America | Europe | Command | Parameter |
| | | 4 | Compulsory memory reception display<br>0: Yes<br>1: No | | | | | | |
| | | 3 | Caller No./Name display<br>0: Yes<br>1: No | | | | | | |
| | | 2 | Closed communication display<br>0: Yes<br>1: No | | | | | | |
| | | 1 | Remote reception display<br>0: Yes<br>1: No | | | | | | |
| | | 0 | DialIn display<br>0: Yes<br>1: No | | | | | | |
| 130036 | Utility Mode display setting 2 | 7 | | - | 0x05 | 0x0f | 0x07 | XE | 36 |
| | | 6 | | | | | | | |
| | | 5 | | | | | | | |
| | | 4 | | | | | | | |
| | | 3 | OFF display of Header Position<br>0: Yes<br>1: No | | | | | | |
| | | 2 | | | | | | | |
| | | 1 | Receive reject display<br>0: Yes<br>1: No | | | | | | |
| | | 0 | | | | | | | |
| 130037 | Not used | 7 | | - | - | - | - | XE | 37 |
| | | 6 | | | | | | | |
| | | 5 | | | | | | | |
| | | 4 | | | | | | | |
| | | 3 | | | | | | | |
| | | 2 | | | | | | | |
| | | 1 | | | | | | | |
| | | 0 | | | | | | | |
| 130038 | Destination default screen setting | 7 | 0x00: Group<br>0x01: FAX<br>0x02: E-mail<br>0x03: BOX<br>0x04: I-Fax<br>0x05: IP address FAX<br>0x06: SMB<br>0x07: FTP<br>0x08: WebDAV | - | 0x00 | 0x00 | 0x00 | XE | 38 |
| | | 6 | | | | | | | |
| | | 5 | | | | | | | |
| | | 4 | | | | | | | |
| | | 3 | | | | | | | |
| | | 2 | | | | | | | |
| | | 1 | | | | | | | |
| | | 0 | | | | | | | |
| 130039 - 13003f | Reserved area | 7 | | - | ALL 0x00 | ALL 0x00 | ALL 0x00 | XE | 39 - 3F |
| | | 6 | | | | | | | |
| | | 5 | | | | | | | |
| | | 4 | | | | | | | |
| | | 3 | | | | | | | |
| | | 2 | | | | | | | |
| | | 1 | | | | | | | |
| | | 0 | | | | | | | |

### 5.24.17 13004#

| Address | Items | Bit No | Contents | Setting | Default | | | CSRC | |
|---|---|---|---|---|---|---|---|---|---|
| | | | | | Japan | North America | Europe | Command | Parameter |
| 130040 - 130044 | Reserved area | 7 | | - | ALL 0x00 | ALL 0x00 | ALL 0x00 | XE | 40 - 44 |

| Address | Items | Bit No | Contents | Setting | Default | | | CSRC | |
|---|---|---|---|---|---|---|---|---|---|
| | | | | | Japan | North America | Europe | Command | Parameter |
| | | 6 | | | | | | | |
| | | 5 | | | | | | | |
| | | 4 | | | | | | | |
| | | 3 | | | | | | | |
| | | 2 | | | | | | | |
| | | 1 | | | | | | | |
| | | 0 | | | | | | | |
| 130045 - 13004f | DialIn additional No. (FAX) | 7 | ASCII 11 digits + NULL | - | ALL 0x00 | ALL 0x00 | ALL 0x00 | XE | 45 - 4F |
| | | 6 | | | | | | | |
| | | 5 | | | | | | | |
| | | 4 | | | | | | | |
| | | 3 | | | | | | | |
| | | 2 | | | | | | | |
| | | 1 | | | | | | | |
| | | 0 | | | | | | | |

### 5.24.18 13005#

| Address | Items | Bit No | Contents | Setting | Default | | | CSRC | |
|---|---|---|---|---|---|---|---|---|---|
| | | | | | Japan | North America | Europe | Command | Parameter |
| 130050 | DialIn additional No. (FAX) | 7 | ASCII 11 digits + NULL | - | 0x00 | 0x00 | 0x00 | XE | 50 |
| | | 6 | | | | | | | |
| | | 5 | | | | | | | |
| | | 4 | | | | | | | |
| | | 3 | | | | | | | |
| | | 2 | | | | | | | |
| | | 1 | | | | | | | |
| | | 0 | | | | | | | |
| 130051 - 13005c | DialIn additional No. (PC-FAX) | 7 | ASCII 11 digits + NULL | - | ALL 0x00 | ALL 0x00 | ALL 0x00 | XE | 51 - 5C |
| | | 6 | | | | | | | |
| | | 5 | | | | | | | |
| | | 4 | | | | | | | |
| | | 3 | | | | | | | |
| | | 2 | | | | | | | |
| | | 1 | | | | | | | |
| | | 0 | | | | | | | |
| 13005d - 13005f | DialIn additional No. (telephone) | 7 | ASCII 11 digits + NULL | - | ALL 0x00 | ALL 0x00 | ALL 0x00 | XE | 5D - 5F |
| | | 6 | | | | | | | |
| | | 5 | | | | | | | |
| | | 4 | | | | | | | |
| | | 3 | | | | | | | |
| | | 2 | | | | | | | |
| | | 1 | | | | | | | |
| | | 0 | | | | | | | |

### 5.24.19 13006#

| Address | Items | Bit No | Contents | Setting | Default | | | CSRC | |
|---|---|---|---|---|---|---|---|---|---|
| | | | | | Japan | North America | Europe | Command | Parameter |
| 130060 - 130068 | DialIn additional No. (telephone) | 7 | ASCII 11 digits + NULL | - | ALL 0x00 | ALL 0x00 | ALL 0x00 | XE | 60 - 68 |
| | | 6 | | | | | | | |
| | | 5 | | | | | | | |
| | | 4 | | | | | | | |
| | | 3 | | | | | | | |

| Address | Items | Bit No | Contents | Setting | Default | | | CSRC | |
|---|---|---|---|---|---|---|---|---|---|
| | | | | | Japan | North America | Europe | Command | Parameter |
| | | 2 | | | | | | | |
| | | 1 | | | | | | | |
| | | 0 | | | | | | | |
| 130069 | Upper limit for signal transmission level setting | 7 | (-dBm) Switched according to destination of FAX | - | 0x0a | 0x0a | 0x08 | XE | 69 |
| | | 6 | | | | | | | |
| | | 5 | | | | | | | |
| | | 4 | | | | | | | |
| | | 3 | | | | | | | |
| | | 2 | | | | | | | |
| | | 1 | | | | | | | |
| | | 0 | | | | | | | |
| 13006a | Lower limit for call termination frequency setting range | 7 | (No. of times) Switched according to destination of FAX | - | 0x00 | 0x00 | 0x00 | XE | 6A |
| | | 6 | | | | | | | |
| | | 5 | | | | | | | |
| | | 4 | | | | | | | |
| | | 3 | | | | | | | |
| | | 2 | | | | | | | |
| | | 1 | | | | | | | |
| | | 0 | | | | | | | |
| 13006b | Upper limit for call termination frequency setting range | 7 | (No. of times) Switched according to destination of FAX | - | 0x0f | 0x0f | 0x0f | XE | 6B |
| | | 6 | | | | | | | |
| | | 5 | | | | | | | |
| | | 4 | | | | | | | |
| | | 3 | | | | | | | |
| | | 2 | | | | | | | |
| | | 1 | | | | | | | |
| | | 0 | | | | | | | |
| 13006c | Dial method setting | 7 | | - | 0x00 | 0x22 | 0x11 | XE | 6C |
| | | 6 | | | | | | | |
| | | 5 | | | | | | | |
| | | 4 | | | | | | | |
| | | 3 | | | | | | | |
| | | 2 | | | | | | | |
| | | 1 | Dial method setting (Switched according to destination of FAX)<br>00: PB, 10pps, 20pps<br>01: PB<br>10: PB, 10pps<br>11: PB, 10pps, 16pps | | | | | | |
| | | 0 | | | | | | | |
| 13006d | Upper limit for redial frequency setting range | 7 | (No. of times) Switched according to destination of FAX | - | 0x07 | 0x01 | 0x07 | XE | 6D |
| | | 6 | | | | | | | |
| | | 5 | | | | | | | |
| | | 4 | | | | | | | |
| | | 3 | | | | | | | |
| | | 2 | | | | | | | |
| | | 1 | | | | | | | |
| | | 0 | | | | | | | |
| 13006e | Upper limit for redial interval setting range | 7 | (Minutes) Switched according to destination of FAX | - | 0x01 | 0x01 | 0x01 | XE | 6E |
| | | 6 | | | | | | | |
| | | 5 | | | | | | | |
| | | 4 | | | | | | | |
| | | 3 | | | | | | | |
| | | 2 | | | | | | | |
| | | 1 | | | | | | | |
| | | 0 | | | | | | | |

| Address | Items | Bit No | Contents | Setting | Default | | | CSRC | |
|---|---|---|---|---|---|---|---|---|---|
| | | | | | Japan | North America | Europe | Command | Parameter |
| 13006f | Lower limit for redial interval setting range | 7 | (Minutes) Switched according to destination of FAX | - | 0x0f | 0x0f | 0x0f | XE | 6F |
| | | 6 | | | | | | | |
| | | 5 | | | | | | | |
| | | 4 | | | | | | | |
| | | 3 | | | | | | | |
| | | 2 | | | | | | | |
| | | 1 | | | | | | | |
| | | 0 | | | | | | | |

### 5.24.20 13007#

| Address | Items | Bit No | Contents | Setting | Default | | | CSRC | |
|---|---|---|---|---|---|---|---|---|---|
| | | | | | Japan | North America | Europe | Command | Parameter |
| 130070 | Telephone-related function setting menu display (1) | 7 | | - | 0x7f | 0x00 | 0x00 | XE | 70 |
| | | 6 | Remote reception<br>0: OFF<br>1: ON | | | | | | |
| | | 5 | Dial-in<br>0: OFF<br>1: ON | | | | | | |
| | | 4 | Number display<br>0: OFF<br>1: ON | | | | | | |
| | | 3 | Pseudo RBT form<br>0: OFF<br>1: ON | | | | | | |
| | | 2 | Pseudo RBT transmission level<br>0: OFF<br>1: ON | | | | | | |
| | | 1 | Connection to answering machine<br>0: OFF<br>1: ON | | | | | | |
| | | 0 | TEL/FAX switching<br>0: OFF<br>1: ON | | | | | | |
| 130071 | Number display related function setting | 7 | | - | 0x00 | 0x00 | 0x00 | XE | 71 |
| | | 6 | | | | | | | |
| | | 5 | | | | | | | |
| | | 4 | | | | | | | |
| | | 3 | | | | | | | |
| | | 2 | | | | | | | |
| | | 1 | Name displayed Type of display at fax reception<br>00: No display<br>01: Display of number<br>10: Display of name | | | | | | |
| | | 0 | | | | | | | |
| 130072 | Setting of lower limit for DTMF transmission level setting range | 7 | (-dBm) Switched according to destination of FAX | - | 0x0e | 0x0f | 0x09 | XE | 72 |
| | | 6 | | | | | | | |
| | | 5 | | | | | | | |
| | | 4 | | | | | | | |
| | | 3 | | | | | | | |
| | | 2 | | | | | | | |
| | | 1 | | | | | | | |
| | | 0 | | | | | | | |
| 130073 | Setting of upper limit for DTMF transmission level setting range | 7 | (-dBm) Switched according to destination of FAX | - | 0x0a | 0x0a | 0x05 | XE | 73 |
| | | 6 | | | | | | | |
| | | 5 | | | | | | | |
| | | 4 | | | | | | | |
| | | 3 | | | | | | | |

| Address | Items | Bit No | Contents | Setting | Default | | | CSRC | |
|---|---|---|---|---|---|---|---|---|---|
| | | | | | Japan | North America | Europe | Command | Parameter |
| | | 2 | | | | | | | |
| | | 1 | | | | | | | |
| | | 0 | | | | | | | |
| 130074 | Setting of lower limit for DTMF H-L level difference setting range | 7 | (dB) Switched according to destination of FAX | - | 0x01 | 0x01 | 0x01 | XE | 74 |
| | | 6 | | | | | | | |
| | | 5 | | | | | | | |
| | | 4 | | | | | | | |
| | | 3 | | | | | | | |
| | | 2 | | | | | | | |
| | | 1 | | | | | | | |
| | | 0 | | | | | | | |
| 130075 | Setting of upper limit for DTMF H-L level difference setting range | 7 | (dB) Switched according to destination of FAX | - | 0x04 | 0x04 | 0x04 | XE | 75 |
| | | 6 | | | | | | | |
| | | 5 | | | | | | | |
| | | 4 | | | | | | | |
| | | 3 | | | | | | | |
| | | 2 | | | | | | | |
| | | 1 | | | | | | | |
| | | 0 | | | | | | | |
| 130076 | For transmission | 7 | | - | 0x00 | 0x00 | 0x00 | XE | 76 |
| | | 6 | | | | | | | |
| | | 5 | | | | | | | |
| | | 4 | | | | | | | |
| | | 3 | | | | | | | |
| | | 2 | Restrict Plural Fax Destination<br>0: OFF<br>1: ON | | | | | | |
| | | 1 | Destination Check Display Function<br>0: OFF<br>1: ON | | | | | | |
| | | 0 | Screen display during transmission<br>0: OFF<br>1: ON | | | | | | |
| 130077 | Lower limit setting of the signal send-out level setting range | 7 | (-dBm) Switched according to destination of FAX | - | 0x0f | 0x0f | 0x0f | XE | 77 |
| | | 6 | | | | | | | |
| | | 5 | | | | | | | |
| | | 4 | | | | | | | |
| | | 3 | | | | | | | |
| | | 2 | | | | | | | |
| | | 1 | | | | | | | |
| | | 0 | | | | | | | |
| 130078 - 13007b | Character-to-search default for FAX main screen | 7 | bit0 :[Main]<br>0: OFF, 1: ON<br>bit10 :[ABC]<br>0: OFF, 1: ON<br>bit11 :[DEF]<br>0: OFF, 1: ON<br>bit12 :[GHI]<br>0: OFF, 1: ON<br>bit13 :[JKL]<br>0: OFF, 1: ON<br>bit14 :[MNO]<br>0: OFF, 1: ON<br>bit15 :[PQRS]<br>0: OFF, 1: ON<br>bit16 :[TUV]<br>0: OFF, 1: ON<br>bit17 :[WXYZ]<br>0: OFF, 1: ON<br>bit18 :[etc] | - | 0x01 | 0x01 | 0x01 | XE | 78 - 7B |
| | | 6 | | | | | | | |
| | | 5 | | | | | | | |
| | | 4 | | | | | | | |
| | | 3 | | | | | | | |
| | | 2 | | | | | | | |
| | | 1 | | | | | | | |

| Address | Items | Bit No | Contents | Setting | Default | | | CSRC | |
|---|---|---|---|---|---|---|---|---|---|
| | | | | | Japan | North America | Europe | Command | Parameter |
| | | 0 | 0: OFF, 1: ON | | | | | | |
| 13007c | Not used | 7 | | - | | | | XE | 7C |
| | | 6 | | | | | | | |
| | | 5 | | | | | | | |
| | | 4 | | | | | | | |
| | | 3 | | | | | | | |
| | | 2 | | | | | | | |
| | | 1 | | | | | | | |
| | | 0 | | | | | | | |
| 13007d | Initial program display page | 7 | 1 - 27 page (HEX: 0x01 - 0x1b),<br>0: Temporary distribution | - | 0x01 | 0x01 | 0x01 | XE | 7D |
| | | 6 | | | | | | | |
| | | 5 | | | | | | | |
| | | 4 | | | | | | | |
| | | 3 | | | | | | | |
| | | 2 | | | | | | | |
| | | 1 | | | | | | | |
| | | 0 | | | | | | | |

### 5.24.21 13008#

| Address | Items | Bit No | Contents | Setting | Default | | | CSRC | |
|---|---|---|---|---|---|---|---|---|---|
| | | | | | Japan | North America | Europe | Command | Parameter |
| 130080 - 130083 | Destination type display setting | 7 | 0: Do not display<br>1: Display | - | 0x00<br>0x00<br>0x00<br>0x01 | 0x00<br>0x00<br>0x00<br>0x01 | 0x00<br>0x00<br>0x00<br>0x01 | XE | 80 - 83 |
| | | 6 | | | | | | | |
| | | 5 | | | | | | | |
| | | 4 | | | | | | | |
| | | 3 | | | | | | | |
| | | 2 | | | | | | | |
| | | 1 | | | | | | | |
| | | 0 | | | | | | | |
| 130084 | No. of destination display characters setting | 7 | 0x0e: 14 characters<br>0x18: 24 characters | - | 0x0e | 0x0e | 0x0e | XE | 84 |
| | | 6 | | | | | | | |
| | | 5 | | | | | | | |
| | | 4 | | | | | | | |
| | | 3 | | | | | | | |
| | | 2 | | | | | | | |
| | | 1 | | | | | | | |
| | | 0 | | | | | | | |

### 5.24.22 98000#

| Address | Items | Bit No | Contents | Setting | Default | | | CSRC | |
|---|---|---|---|---|---|---|---|---|---|
| | | | | | Japan | North America | Europe | Command | Parameter |
| 980000 | Lower limit of receive time interval setting | 7 | (Seconds) | - | 0x00 | 0x00 | 0x00 | XE | - |
| | | 6 | | | | | | | |
| | | 5 | | | | | | | |
| | | 4 | | | | | | | |
| | | 3 | | | | | | | |
| | | 2 | | | | | | | |
| | | 1 | | | | | | | |
| | | 0 | | | | | | | |
| 980001 | Upper limit of receive time interval setting | 7 | (Seconds) | - | 0x2d | 0x2d | 0x2d | XE | - |
| | | 6 | | | | | | | |
| | | 5 | | | | | | | |

| Address | Items | Bit No | Contents | Setting | Default | | | CSRC | |
|---|---|---|---|---|---|---|---|---|---|
| | | | | | Japan | North America | Europe | Command | Parameter |
| | | 4 | | | | | | | |
| | | 3 | | | | | | | |
| | | 2 | | | | | | | |
| | | 1 | | | | | | | |
| | | 0 | | | | | | | |

## 5.25 FAX setting (Address parameter list: for line 1)

### 5.25.1 0e009#

| Address | Items | Bit No | Contents | Setting | Default | | | CSRC | |
|---|---|---|---|---|---|---|---|---|---|
| | | | | | Japan | North America | Europe | Command | Parameter |
| 0e0090 | Transmission ATT | 7 | Tone signal/FSK transmission ATT (HEX) every 1 dBm (0 to -15dBm) | Utility Mode Special Setting | 0xaa | 0xaa | 0xaa | XB | 00 |
| | | 6 | | | | | | | |
| | | 5 | | | | | | | |
| | | 4 | | | | | | | |
| | | 3 | High-speed signal transmission ATT (HEX) every 1 dBm (0 to -15dBm) | | | | | | |
| | | 2 | | | | | | | |
| | | 1 | | | | | | | |
| | | 0 | | | | | | | |
| 0e0091 | CED transmission ATT | 7 | | Utility Mode Special Setting (0-3) | 0x0a | 0x0a | 0x0a | XB | 01 |
| | | 6 | | | | | | | |
| | | 5 | | | | | | | |
| | | 4 | | | | | | | |
| | | 3 | CED/ANS transmission ATT (HEX) every 1 dBm (0 to -15dBm) | | | | | | |
| | | 2 | | | | | | | |
| | | 1 | | | | | | | |
| | | 0 | | | | | | | |
| 0e0092 | CD/SED ON level | 7 | | Utility Mode Special Setting (0,1) | 0x03 | 0x03 | 0x03 | XB | 02 |
| | | 6 | | | | | | | |
| | | 5 | | | | | | | |
| | | 4 | | | | | | | |
| | | 3 | | | | | | | |
| | | 2 | | | | | | | |
| | | 1 | CD/SED ON level [dBm] | | | | | | |
| | | 0 | 00: -33<br>01: -38<br>10: -43<br>11: -48 | | | | | | |
| 0e0093 | Cable equalizer | 7 | | Utility Mode Special Setting (4,5) | 0x00 | 0x00 | 0x00 | XB | 03 |
| | | 6 | | | | | | | |
| | | 5 | Cable EQL transmission selection | | | | | | |
| | | 4 | 00: OFF<br>01: Send only<br>10: Receive only<br>11: Send and receive | | | | | | |
| | | 3 | | | | | | | |
| | | 2 | | | | | | | |
| | | 1 | Cable EQL parameter selection | | | | | | |
| | | 0 | 00: 1.8 km<br>01: 3.6km<br>10: 7.2km<br>11: NTT4 | | | | | | |
| 0e0094 | V34 Points | 7 | | Utility Mode Special Setting (4,5) | 0x00 | 0x00 | 0x00 | XB | 04 |
| | | 6 | | | | | | | |
| | | 5 | | | | | | | |
| | | 4 | | | | | | | |
| | | 3 | | | | | | | |

| Address | Items | Bit No | Contents | Setting | Default | | | CSRC | |
|---|---|---|---|---|---|---|---|---|---|
| | | | | | Japan | North America | Europe | Command | Parameter |
| | | 2 | | | | | | | |
| | | 1 | V34 Point<br>00: Auto<br>01: 16-point<br>10: 4-point | | | | | | |
| | | 0 | | | | | | | |
| 0e0095 | TEL/FAX switching (For Japan models only) | 7 | Time from vocal response to RBT transmission (CNG detection waiting time 2)<br>0: 4 sec.<br>1: 2 sec. | Utility Mode Special Setting (4,5) | 0x00 | 0x00 | 0x00 | XB | 05 |
| | | 6 | Time from reception to voice response transmission (CNG detection waiting time 1)<br>0: 2 sec.<br>1: 4 sec. | | | | | | |
| | | 5 | TEL/FAX switching mode<br>0: Disabled<br>1: Enabled | | | | | | |
| | | 4 | External telephone no ringing setting<br>0: Disabled<br>1: Enabled (disconnected) | | | | | | |
| | | 3 | TEL/FAX switching ON response details<br>0: Voice response + RBT transmission<br>1: RBT transmission only | | | | | | |
| | | 2 | | | | | | | |
| | | 1 | | | | | | | |
| | | 0 | | | | | | | |
| 0e0096 | Ring Back Tone parameter (For Japan models only) | 7 | RBT form<br>000: No<br>001: Japan<br>010: US<br>011: UK<br>100: Germany<br>101 to 111: Others | Utility Mode Special Setting (0-3,5-7) | 0x2a | 0x4a | 0x68 | XB | 06 |
| | | 6 | | | | | | | |
| | | 5 | | | | | | | |
| | | 4 | CED transmitted upon TEL/FAX switching | | | | | | |
| | | 3 | RBT transmission level (HEX)<br>0 to -15 dBm | | | | | | |
| | | 2 | | | | | | | |
| | | 1 | | | | | | | |
| | | 0 | | | | | | | |
| 0e0097 | International com mode operation | 7 | DIS waiting frequency<br>0: Always once<br>1: Twice in overseas communication | Utility Mode Special Setting (6,7) | 0x40 | 0x40 | 0x40 | XB | 07 |
| | | 6 | Overseas communication<br>0: No<br>1: Yes | | | | | | |
| | | 5 | | | | | | | |
| | | 4 | | | | | | | |
| | | 3 | | | | | | | |
| | | 2 | | | | | | | |
| | | 1 | | | | | | | |
| | | 0 | | | | | | | |
| 0e0098 | Starting speed in international mode (V29 modem) | 7 | | Utility Mode Special Setting (0,1,3,4) | 0x02 | 0x02 | 0x02 | XB | 08 |
| | | 6 | | | | | | | |
| | | 5 | | | | | | | |
| | | 4 | 9600 bps/V.29 | | | | | | |
| | | 3 | 7200 bps/V.29 | | | | | | |
| | | 2 | | | | | | | |
| | | 1 | 4800 bps/V.27 ter | | | | | | |

| Address | Items | Bit No | Contents | Setting | Default | | | CSRC | |
|---|---|---|---|---|---|---|---|---|---|
| | | | | | Japan | North America | Europe | Command | Parameter |
| | | 0 | 2400 bps/V.27 ter | | | | | | |
| 0e0099 | Starting speed in international mode (V17 or V33 modem) | 7 | 14400 bps/V.17 | Utility Mode Special Setting (4-7) | 0x10 | 0x10 | 0x10 | XB | 09 |
| | | 6 | 12000 bps/V.17 | | | | | | |
| | | 5 | 9600 bps/V.17 | | | | | | |
| | | 4 | 7200 bps/V.17 | | | | | | |
| | | 3 | | | | | | | |
| | | 2 | | | | | | | |
| | | 1 | | | | | | | |
| | | 0 | | | | | | | |
| 0e009a | Starting speed in international mode (V34) | 7 | 33600 bps/V.34 | Utility Mode Special Setting | 0x20 | 0x20 | 0x20 | XB | 0A |
| | | 6 | 31200 bps/V.34 | | | | | | |
| | | 5 | 28800 bps/V.34 | | | | | | |
| | | 4 | 26400 bps/V.34 | | | | | | |
| | | 3 | 24000 bps/V.34 | | | | | | |
| | | 2 | 21600 bps/V.34 | | | | | | |
| | | 1 | 19200 bps/V.34 | | | | | | |
| | | 0 | 16800 bps/V.34 | | | | | | |
| 0e009b | CD OFF timer | 7 | CD OFF timer (Unit: 100 ms, HEX) | - | 0x14 | 0x14 | 0x14 | XB | 0B |
| | | 6 | | | | | | | |
| | | 5 | | | | | | | |
| | | 4 | | | | | | | |
| | | 3 | | | | | | | |
| | | 2 | | | | | | | |
| | | 1 | | | | | | | |
| | | 0 | | | | | | | |
| 0e009c | CD ON integration time | 7 | CD ON integration time (Unit: 100 ms. HEX) | - | 0x06 | 0x06 | 0x06 | XB | 0C |
| | | 6 | | | | | | | |
| | | 5 | | | | | | | |
| | | 4 | | | | | | | |
| | | 3 | | | | | | | |
| | | 2 | | | | | | | |
| | | 1 | | | | | | | |
| | | 0 | | | | | | | |
| 0e009d | Max. allowable symbol speed | 7 | V34 controll ch data rate<br>0: 1200<br>1: 2400 | Utility Mode Special Setting (0-3,7) | 0x05 | 0x05 | 0x05 | XB | 0D |
| | | 6 | | | | | | | |
| | | 5 | | | | | | | |
| | | 4 | | | | | | | |
| | | 3 | Max. allowable symbol speed<br>0000: 2400<br>0001: Reserved<br>0010: 2800<br>0011: 3000<br>0100: 3200<br>0101: 3429 | | | | | | |
| | | 2 | | | | | | | |
| | | 1 | | | | | | | |
| | | 0 | | | | | | | |
| 0e009e | V34 primary channel fallback | 7 | No. of frame errors subjected to fallback (HEX) | - | 0x03 | 0x03 | 0x03 | XB | 0E |
| | | 6 | | | | | | | |
| | | 5 | | | | | | | |
| | | 4 | | | | | | | |
| | | 3 | | | | | | | |
| | | 2 | | | | | | | |
| | | 1 | | | | | | | |
| | | 0 | | | | | | | |

### 5.25.2 0e00a#

| Address | Items | Bit No | Contents | Setting | Default | | | CSRC | |
|---|---|---|---|---|---|---|---|---|---|
| | | | | | Japan | North America | Europe | Command | Parameter |
| 0e00a0 | V34 off Rx-V34 off time after error | 7 | Timer value after V34 reception error used to reset V34 off reception (min, HEX) (Valid only when transmission side cannot be specified) | - | 0x0a | 0x0a | 0x0a | XB | 10 |
| | | 6 | | | | | | | |
| | | 5 | | | | | | | |
| | | 4 | | | | | | | |
| | | 3 | | | | | | | |
| | | 2 | | | | | | | |
| | | 1 | | | | | | | |
| | | 0 | | | | | | | |
| 0e00a1 | V34 off Rx-V17 OK Rx times to reset V34 off Rx | 7 | No. of continuous success of V17 receptions used to reset V34 off reception after V34 reception error (times, HEX) (Valid only when transmission side can be specified with Caller ID) | - | 0x0a | 0x0a | 0x0a | XB | 11 |
| | | 6 | | | | | | | |
| | | 5 | | | | | | | |
| | | 4 | | | | | | | |
| | | 3 | | | | | | | |
| | | 2 | | | | | | | |
| | | 1 | | | | | | | |
| | | 0 | | | | | | | |
| 0e00a2 | (Inhibit of) V34 off Rx-Function ON/ OFF | 7 | V34 off function for manual reception<br>0: Enable<br>1: Disable | - | 0x00 | 0x02 | 0x02 | XB | 12 |
| | | 6 | | | | | | | |
| | | 5 | | | | | | | |
| | | 4 | | | | | | | |
| | | 3 | | | | | | | |
| | | 2 | | | | | | | |
| | | 1 | V.34 OFF reset mode = No. of successful consecutive V.17 reception times (ID specified)<br>0: Enabled<br>1: Inhibit | | | | | | |
| | | 0 | V.34 OFF reset mode = time (ID cannot be specified)<br>0: Enabled<br>1: Disabled | | | | | | |
| 0e00a3 | JBIG parameter | 7 | | - | 0x01 | 0x01 | 0x01 | XB | 13 |
| | | 6 | | | | | | | |
| | | 5 | | | | | | | |
| | | 4 | | | | | | | |
| | | 3 | | | | | | | |
| | | 2 | | | | | | | |
| | | 1 | Use of following FP JBIG option LO size at reduction<br>0: No<br>1: Yes | | | | | | |
| | | 0 | JBIG optional L0 capacity<br>0: No<br>1: Yes | | | | | | |
| 0e00a4 | JBIG LO size | 7 | JBIG optional LO size used for reduction (HEX) (setting range: 0x01to0xffffffff)<br>[0] = HH, [1] = HL, [2] = LH, [3] = LL | - | 0x00<br>0x00<br>0x00<br>0x80 | 0x00<br>0x00<br>0x00<br>0x80 | 0x00<br>0x00<br>0x00<br>0x80 | XB | 14 |
| | | 6 | | | | | | | |
| | | 5 | | | | | | | |
| | | 4 | | | | | | | |
| | | 3 | | | | | | | |
| | | 2 | | | | | | | |
| | | 1 | | | | | | | |
| | | 0 | | | | | | | |
| 0e00a8 | (Inhibit of) JBIG off Rx-Function ON/ OFF | 7 | | - | 0x00 | 0x00 | 0x00 | XB | 18 |
| | | 6 | | | | | | | |
| | | 5 | | | | | | | |

| Address | Items | Bit No | Contents | Setting | Default | | | CSRC | |
|---|---|---|---|---|---|---|---|---|---|
| | | | | | Japan | North America | Europe | Command | Parameter |
| | | 4 | | | | | | | |
| | | 3 | | | | | | | |
| | | 2 | | | | | | | |
| | | 1 | JBIG off function at A3 high-definition reception (DIS retransmission)<br>0:OFF<br>1: ON | | | | | | |
| | | 0 | JBIG off function after JBIG reception error<br>0: Enable<br>1: Disable | | | | | | |
| 0e00a9 | JBIG off Rx-JBIG off time after error | 7 | Timer value after JBIG reception error to reset JBIG off reception (min, HEX) (10 min. if 0) | - | 0x0a | 0x0a | 0x0a | XB | 19 |
| | | 6 | | | | | | | |
| | | 5 | | | | | | | |
| | | 4 | | | | | | | |
| | | 3 | | | | | | | |
| | | 2 | | | | | | | |
| | | 1 | | | | | | | |
| | | 0 | | | | | | | |
| 0e00aa | PBX dial tone detection frequency pattern | 7 | | - | 0x08 | 0x00 | 0x00 | XB | 1A |
| | | 6 | Tone type<br>0: Single<br>1: Dual | | | | | | |
| | | 5 | | | | | | | |
| | | 4 | PBX dial tone detection frequency pattern<br>1: 155 ±65 Hz<br>2: 375 ±125 Hz<br>3: 400 ±90 Hz<br>4: 400 ±100 Hz<br>5: 420 ±90 Hz<br>6: 425 ±75 Hz<br>7: 425 ±95 Hz<br>8: 425 ±125 Hz<br>9: 430 ±90 Hz<br>10: 435 ±85 Hz<br>11: 440 ±90 Hz<br>12: 445 ±125 Hz<br>13: 450 ±50 Hz<br>14: 450 ±70 Hz<br>15: 450 ±100 Hz<br>16: 450 ±120 Hz<br>17: 460 ±140 Hz<br>18: 465 ±205 Hz<br>19: 475 ±175 Hz<br>20: 480 ±90 Hz<br>21: 480 ±190 Hz<br>22: 1155 ±25 Hz | | | | | |
| | | 3 | | | | | | | |
| | | 2 | | | | | | | |
| | | 1 | | | | | | | |
| | | 0 | | | | | | | |
| 0e00ab | PBX dial tone detection time | 7 | PBX dial tone detection time or max. ON time value (unit: 20 ms, HEX) | - | 0x32 | 0x00 | 0x00 | XB | 1B |
| | | 6 | | | | | | | |
| | | 5 | | | | | | | |
| | | 4 | | | | | | | |
| | | 3 | | | | | | | |
| | | 2 | | | | | | | |
| | | 1 | | | | | | | |
| | | 0 | | | | | | | |
| 0e00ac | PBX dial tone ON time min. value | 7 | PBX dial tone ON time min. value (unit: 20ms, HEX) | - | 0x00 | 0x00 | 0x00 | XB | 1C |
| | | 6 | | | | | | | |
| | | 5 | | | | | | | |
| | | 4 | | | | | | | |
| | | 3 | | | | | | | |
| | | 2 | | | | | | | |

| Address | Items | Bit No | Contents | Setting | Default | | | CSRC | |
|---|---|---|---|---|---|---|---|---|---|
| | | | | | Japan | North America | Europe | Command | Parameter |
| | | 1 | | | | | | | |
| | | 0 | | | | | | | |
| 0e00ad | PBX dial tone OFF time max. value | 7 | PBX dial tone OFF time max. value (unit: 20 ms, HEX) | - | 0x00 | 0x00 | 0x00 | XB | 1D |
| | | 6 | | | | | | | |
| | | 5 | | | | | | | |
| | | 4 | | | | | | | |
| | | 3 | | | | | | | |
| | | 2 | | | | | | | |
| | | 1 | | | | | | | |
| | | 0 | | | | | | | |
| 0e00ae | PBX dial tone OFF time min. value | 7 | PBX dial tone OFF time min. value (unit: 20 ms, HEX) | - | 0x00 | 0x00 | 0x00 | XB | 1E |
| | | 6 | | | | | | | |
| | | 5 | | | | | | | |
| | | 4 | | | | | | | |
| | | 3 | | | | | | | |
| | | 2 | | | | | | | |
| | | 1 | | | | | | | |
| | | 0 | | | | | | | |
| 0e00af | PBX dial tone waiting time | 7 | PBX dial tone waiting time or pre-pause time (unit: 1 sec, HEX) | - | 0x03 | 0x03 | 0x03 | XB | 1F |
| | | 6 | | | | | | | |
| | | 5 | | | | | | | |
| | | 4 | | | | | | | |
| | | 3 | | | | | | | |
| | | 2 | | | | | | | |
| | | 1 | | | | | | | |
| | | 0 | | | | | | | |

### 5.25.3 0e00b#

| Address | Items | Bit No | Contents | Setting | Default | | | CSRC | |
|---|---|---|---|---|---|---|---|---|---|
| | | | | | Japan | North America | Europe | Command | Parameter |
| 0e00b0 | PBX dial tone instantaneous break detection time | 7 | Instantaneous shutdown time (unit: 20 ms, HEX) or tone detection frequency (times, HEX) | - | 0x00 | 0x00 | 0x00 | XB | 20 |
| | | 6 | | | | | | | |
| | | 5 | | | | | | | |
| | | 4 | | | | | | | |
| | | 3 | | | | | | | |
| | | 2 | | | | | | | |
| | | 1 | | | | | | | |
| | | 0 | | | | | | | |
| 0e00b1 | 1st dial tone detection frequency pattern | 7 | | - | 0x08 | 0x35 | 0x13 | XB | 21 |
| | | 6 | Tone type<br>0: Single<br>1: Dual | | | | | | |
| | | 5 | | | | | | | |
| | | 4 | 1st dial tone detection frequency pattern<br>1: 155 ±65 Hz<br>2: 375 ±125 Hz<br>3: 400 ±90 Hz<br>4: 400 ±100 Hz<br>5: 420 ±90 Hz<br>6: 425 ±75 Hz<br>7: 425 ±95 Hz<br>8: 425 ±125 Hz<br>9: 430 ±90 Hz<br>10: 435 ±85 Hz<br>11: 440 ±90 Hz<br>12: 445 ±125 Hz<br>13: 450 ±50 Hz | | | | | | |
| | | 3 | | | | | | | |
| | | 2 | | | | | | | |
| | | 1 | | | | | | | |

| Address | Items | Bit No | Contents | Setting | Default | | | CSRC | |
|---|---|---|---|---|---|---|---|---|---|
| | | | | | Japan | North America | Europe | Command | Parameter |
| | | 0 | 14: 450 ±70 Hz<br>15: 450 ±100 Hz<br>16: 450 ±120 Hz<br>17: 460 ±140 Hz<br>18: 465 ±205 Hz<br>19: 475 ±175 Hz<br>20: 480 ±90 Hz<br>21: 480 ±190 Hz<br>22: 1155 ±25 Hz | | | | | | |
| 0e00b2 | 1st dial tone detection time | 7<br>6<br>5<br>4<br>3<br>2<br>1<br>0 | 1st dial tone detection time or ON time max. value (unit: 20 ms, HEX) | - | 0x32 | 0x32 | 0x1a | XB | 22 |
| 0e00b3 | 1st dial tone ON time min. value | 7<br>6<br>5<br>4<br>3<br>2<br>1<br>0 | 1st dial tone ON time min. value (unit: 20 ms, HEX) | - | 0x00 | 0x00 | 0x00 | XB | 23 |
| 0e00b4 | 1st dial tone OFF time max. value | 7<br>6<br>5<br>4<br>3<br>2<br>1<br>0 | 1st dial tone OFF time max. value (unit: 20 ms, HEX) | - | 0x00 | 0x00 | 0x00 | XB | 24 |
| 0e00b5 | 1st dial tone OFF time min. value | 7<br>6<br>5<br>4<br>3<br>2<br>1<br>0 | 1st dial tone OFF time min. value (unit: 20 ms, HEX) | - | 0x00 | 0x00 | 0x00 | XB | 25 |
| 0e00b6 | 1st dial tone waiting time | 7<br>6<br>5<br>4<br>3<br>2<br>1<br>0 | 1st dial tone waiting time or pre-pause time (unit: 1 sec, HEX) | - | 0x03 | 0x03 | 0x04 | XB | 26 |
| 0e00b7 | 1st dial tone instantaneous break detection time | 7<br>6<br>5<br>4<br>3<br>2<br>1<br>0 | Instantaneous shutdown time (unit: 20 ms, HEX) or tone detection frequency (times, HEX) | - | 0x00 | 0x00 | 0x05 | XB | 27 |

| Address | Items | Bit No | Contents | Setting | Default | | | CSRC | |
|---|---|---|---|---|---|---|---|---|---|
| | | | | | Japan | North America | Europe | Command | Parameter |
| 0e00b8 | 2nd dial tone detection pattern | 7 | | - | 0x08 | 0x00 | 0x00 | XB | 28 |
| | | 6 | Tone type<br>0: Single<br>1: Dual | | | | | | |
| | | 5 | | | | | | | |
| | | 4 | 2nd dial tone detection pattern<br>1: 155 ±65 Hz<br>2: 375 ±125 Hz<br>3: 400 ±90 Hz<br>4: 400 ±100 Hz<br>5: 420 ±90 Hz<br>6: 425 ±75 Hz<br>7: 425 ±95 Hz<br>8: 425 ±125 Hz<br>9: 430 ±90 Hz<br>10: 435 ±85 Hz<br>11: 440 ±90 Hz<br>12: 445 ±125 Hz<br>13: 450 ±50 Hz<br>14: 450 ±70 Hz<br>15: 450 ±100 Hz<br>16: 450 ±120 Hz<br>17: 460 ±140 Hz<br>18: 465 ±205 Hz<br>19: 475 ±175 Hz<br>20: 480 ±90 Hz<br>21: 480 ±190 Hz<br>22: 1155 ±25 Hz | | | | | |
| | | 3 | | | | | | | |
| | | 2 | | | | | | | |
| | | 1 | | | | | | | |
| | | 0 | | | | | | | |
| 0e00b9 | 2nd dial tone detection time | 7 | 2nd dial tone detection time or ON time max. value (unit: 20 ms, HEX) | - | 0x08 | 0x00 | 0x00 | XB | 29 |
| | | 6 | | | | | | | |
| | | 5 | | | | | | | |
| | | 4 | | | | | | | |
| | | 3 | | | | | | | |
| | | 2 | | | | | | | |
| | | 1 | | | | | | | |
| | | 0 | | | | | | | |
| 0e00ba | 2nd dial tone ON time min. value | 7 | 2nd dial tone ON time min. value (unit: 20 ms, HEX) | - | 0x02 | 0x00 | 0x00 | XB | 2A |
| | | 6 | | | | | | | |
| | | 5 | | | | | | | |
| | | 4 | | | | | | | |
| | | 3 | | | | | | | |
| | | 2 | | | | | | | |
| | | 1 | | | | | | | |
| | | 0 | | | | | | | |
| 0e00bb | 2nd dial tone OFF time max. value | 7 | 2nd dial tone OFF time max. value (unit: 20 ms, HEX) | - | 0x0a | 0x00 | 0x00 | XB | 2B |
| | | 6 | | | | | | | |
| | | 5 | | | | | | | |
| | | 4 | | | | | | | |
| | | 3 | | | | | | | |
| | | 2 | | | | | | | |
| | | 1 | | | | | | | |
| | | 0 | | | | | | | |
| 0e00bc | 2nd dial tone OFF time min. value | 7 | 2nd dial tone OFF time min. value (unit: 20 ms, HEX) | - | 0x04 | 0x00 | 0x00 | XB | 2C |
| | | 6 | | | | | | | |
| | | 5 | | | | | | | |
| | | 4 | | | | | | | |
| | | 3 | | | | | | | |
| | | 2 | | | | | | | |
| | | 1 | | | | | | | |
| | | 0 | | | | | | | |
| 0e00bd | 2nd dial tone waiting time | 7 | 2nd dial tone waiting time or pre-pause time (unit: 1 sec, HEX) | - | 0x03 | 0x03 | 0x03 | XB | 2D |

| Address | Items | Bit No | Contents | Setting | Default | | | CSRC | |
|---|---|---|---|---|---|---|---|---|---|
| | | | | | Japan | North America | Europe | Command | Parameter |
| | | 6 | | | | | | | |
| | | 5 | | | | | | | |
| | | 4 | | | | | | | |
| | | 3 | | | | | | | |
| | | 2 | | | | | | | |
| | | 1 | | | | | | | |
| | | 0 | | | | | | | |
| 0e00be | 2nd dial tone instantaneous break detection time | 7 | Instantaneous shutdown detection time (unit: 20 ms, HEX) or tone detection frequency (times, HEX) | - | 0x03 | 0x00 | 0x00 | XB | 2E |
| | | 6 | | | | | | | |
| | | 5 | | | | | | | |
| | | 4 | | | | | | | |
| | | 3 | | | | | | | |
| | | 2 | | | | | | | |
| | | 1 | | | | | | | |
| | | 0 | | | | | | | |
| 0e00bf | 3rd dial tone detection pattern | 7 | | - | 0x00 | 0x00 | 0x00 | XB | 2F |
| | | 6 | Tone type<br>0: Single<br>1: Dual | | | | | | |
| | | 5 | | | | | | | |
| | | 4 | 3 RD dial tone detection pattern<br>1: 155 ±65 Hz<br>2: 375 ±125 Hz<br>3: 400 ±90 Hz<br>4: 400 ±100 Hz<br>5: 420 ±90 Hz<br>6: 425 ±75 Hz<br>7: 425 ±95 Hz<br>8: 425 ±125 Hz<br>9: 430 ±90 Hz<br>10: 435 ±85 Hz<br>11: 440 ±90 Hz<br>12: 445 ±125 Hz<br>13: 450 ±50 Hz<br>14: 450 ±70 Hz<br>15: 450 ±100 Hz<br>16: 450 ±120 Hz<br>17: 460 ±140 Hz<br>18: 465 ±205 Hz<br>19: 475 ±175 Hz<br>20: 480 ±90 Hz<br>21: 480 ±190 Hz<br>22: 1155 ±25 Hz | | | | | |
| | | 3 | | | | | | | |
| | | 2 | | | | | | | |
| | | 1 | | | | | | | |
| | | 0 | | | | | | | |

### 5.25.4 0e00c#

| Address | Items | Bit No | Contents | Setting | Default | | | CSRC | |
|---|---|---|---|---|---|---|---|---|---|
| | | | | | Japan | North America | Europe | Command | Parameter |
| 0e00c0 | Busy dial tone detection pattern | 7 | | - | 0x08 | 0x55 | 0x09 | XB | 30 |
| | | 6 | Tone type<br>0: Single<br>1: Dual | | | | | | |
| | | 5 | | | | | | | |
| | | 4 | Busy dial tone detection pattern<br>1: 155 ±65 Hz<br>2: 375 ±125 Hz<br>3: 400 ±90 Hz<br>4: 400 ±100 Hz<br>5: 420 ±90 Hz<br>6: 425 ±75 Hz<br>7: 425 ±95 Hz<br>8: 425 ±125 Hz<br>9: 430 ±90 Hz | | | | | |
| | | 3 | | | | | | | |
| | | 2 | | | | | | | |
| | | 1 | | | | | | | |

| Address | Items | Bit No | Contents | Setting | Default | | | CSRC | |
|---|---|---|---|---|---|---|---|---|---|
| | | | | | Japan | North America | Europe | Command | Parameter |
| | | 0 | 10: 435 ±85 Hz<br>11: 440 ±90 Hz<br>12: 445 ±125 Hz<br>13: 450 ±50 Hz<br>14: 450 ±70 Hz<br>15: 450 ±100 Hz<br>16: 450 ±120 Hz<br>17: 460 ±140 Hz<br>18: 465 ±205 Hz<br>19: 475 ±175 Hz<br>20: 480 ±90 Hz<br>21: 480 ±190 Hz<br>22: 1155 ±25 Hz | | | | | | |
| 0e00c1 | Busy tone ON time max. value | 7 | Busy tone ON time max. value (unit: 20 ms, HEX) | - | 0x1e | 0x1e | 0x00 | XB | 31 |
| | | 6 | | | | | | | |
| | | 5 | | | | | | | |
| | | 4 | | | | | | | |
| | | 3 | | | | | | | |
| | | 2 | | | | | | | |
| | | 1 | | | | | | | |
| | | 0 | | | | | | | |
| 0e00c2 | Busy tone ON time min. value | 7 | Busy tone ON time min. value (unit: 20 ms, HEX) | - | 0x14 | 0x14 | 0x00 | XB | 32 |
| | | 6 | | | | | | | |
| | | 5 | | | | | | | |
| | | 4 | | | | | | | |
| | | 3 | | | | | | | |
| | | 2 | | | | | | | |
| | | 1 | | | | | | | |
| | | 0 | | | | | | | |
| 0e00c3 | Busy tone OFF time max. value | 7 | Busy tone OFF time max. value (unit: 20 ms, HEX) | - | 0x1e | 0x1e | 0x00 | XB | 33 |
| | | 6 | | | | | | | |
| | | 5 | | | | | | | |
| | | 4 | | | | | | | |
| | | 3 | | | | | | | |
| | | 2 | | | | | | | |
| | | 1 | | | | | | | |
| | | 0 | | | | | | | |
| 0e00c4 | Busy tone OFF time min. value | 7 | Busy tone OFF time min. value (unit: 20 ms, HEX) | - | 0x14 | 0x14 | 0x00 | XB | 34 |
| | | 6 | | | | | | | |
| | | 5 | | | | | | | |
| | | 4 | | | | | | | |
| | | 3 | | | | | | | |
| | | 2 | | | | | | | |
| | | 1 | | | | | | | |
| | | 0 | | | | | | | |
| 0e00c5 | Ringer detection pattern | 7 | Custom mode<br>0: OFF (in accordance with bits 3-0)<br>1: ON (in accordance with bits 5-4) | - | 0x00 | 0x00 | 0x00 | XB | 35 |
| | | 6 | | | | | | | |
| | | 5 | Custom mode ringer detection pattern<br>00: Single<br>01: Double<br>10: Triple<br>*The standard time is configured with DRPD_Custom[].<br>Configure commonly with DRPD_1st[] through 3rd[] to adjust the detection time. | | | | | | |
| | | 4 | | | | | | | |
| | | 3 | Ringer detection pattern | | | | | | |

| Address | Items | Bit No | Contents | Setting | Default | | | CSRC | |
|---|---|---|---|---|---|---|---|---|---|
| | | | | | Japan | North America | Europe | Command | Parameter |
| | | 2<br>1<br>0 | 0000: Nomal<br>0001: DRPD_Single<br>0010: DRPD_Double<br>0011: DRPD_Triple1<br>0100: DRPD_Triple2<br>0101: DRPD_NZDA1<br>0110: DRPD_NZDA2<br>0111: DRPD_NZDA3<br>1000: DRPD_NZDA4<br>1001: DRPD_Duet<br>*Normal conforms to Ringer[2] through [5] as usual.<br>*For DRPD, configure the margin time (min, max) from the standard time*1. | | | | | | |
| 0e00c6 | Ringer detection frequency upper limits | 7<br>6<br>5<br>4<br>3<br>2<br>1<br>0 | Ringer detection frequency upper limit (unit: 1 Hz, HEX) | - | 0x46 | 0x46 | 0x46 | XB | 36 |
| 0e00c7 | Ringer detection frequency lower limits | 7<br>6<br>5<br>4<br>3<br>2<br>1<br>0 | Ringer detection frequency lower limit (unit: 1 Hz, HEX) | - | 0x0c | 0x0c | 0x0c | XB | 37 |
| 0e00c8 | Ringer ON time max. value | 7<br>6<br>5<br>4<br>3<br>2<br>1<br>0 | Ringer ON time max. value (unit: 20 ms, HEX) | - | 0x00 | 0x00 | 0x00 | XB | 38 |
| 0e00c9 | Ringer ON time min. value | 7<br>6<br>5<br>4<br>3<br>2<br>1<br>0 | Ringer ON time min. value (unit: 20 ms, HEX) | - | 0x0a | 0x0a | 0x08 | XB | 39 |
| 0e00ca | Ringer OFF time max. value | 7<br>6<br>5<br>4<br>3<br>2<br>1<br>0 | Ringer OFF time max. value (unit: 100 ms, HEX) | - | 0x3c | 0x3c | 0x46 | XB | 3A |
| 0e00cb | Ringer OFF time min. value | 7<br>6<br>5<br>4 | Ringer OFF time min. value (unit: 100 ms, HEX) | Utility Mode Special Setting | 0x02 | 0x00 | 0x00 | XB | 3B |

| Address | Items | Bit No | Contents | Setting | Default | | | CSRC | |
|---|---|---|---|---|---|---|---|---|---|
| | | | | | Japan | North America | Europe | Command | Parameter |
| | | 3 | | | | | | | |
| | | 2 | | | | | | | |
| | | 1 | | | | | | | |
| | | 0 | | | | | | | |
| 0e00cc | DRPD Ringer ON time max. value | 7 | DRPD Ringer ON time max. value (unit: 20 ms, HEX) | - | 0x09 | 0x09 | 0x09 | XB | 3C |
| | | 6 | | | | | | | |
| | | 5 | | | | | | | |
| | | 4 | | | | | | | |
| | | 3 | | | | | | | |
| | | 2 | | | | | | | |
| | | 1 | | | | | | | |
| | | 0 | | | | | | | |
| 0e00cd | DRPD ringer ON time min. value | 7 | DRPD ringer ON time min. value (in 20-ms increments, HEX) | - | 0x09 | 0x09 | 0x09 | XB | 3D |
| | | 6 | | | | | | | |
| | | 5 | | | | | | | |
| | | 4 | | | | | | | |
| | | 3 | | | | | | | |
| | | 2 | | | | | | | |
| | | 1 | | | | | | | |
| | | 0 | | | | | | | |
| 0e00ce | DRPD ringer OFF time max. value | 7 | DRPD ringer OFF time max. value (in 20-ms increments, HEX) | - | 0x09 | 0x09 | 0x09 | XB | 3E |
| | | 6 | | | | | | | |
| | | 5 | | | | | | | |
| | | 4 | | | | | | | |
| | | 3 | | | | | | | |
| | | 2 | | | | | | | |
| | | 1 | | | | | | | |
| | | 0 | | | | | | | |
| 0e00cf | DRPD ringer OFF time min. value | 7 | DRPD ringer OFF time min. value (in 20-ms increments, HEX) | - | 0x09 | 0x09 | 0x09 | XB | 3F |
| | | 6 | | | | | | | |
| | | 5 | | | | | | | |
| | | 4 | | | | | | | |
| | | 3 | | | | | | | |
| | | 2 | | | | | | | |
| | | 1 | | | | | | | |
| | | 0 | | | | | | | |

- *1: DRPD standard time

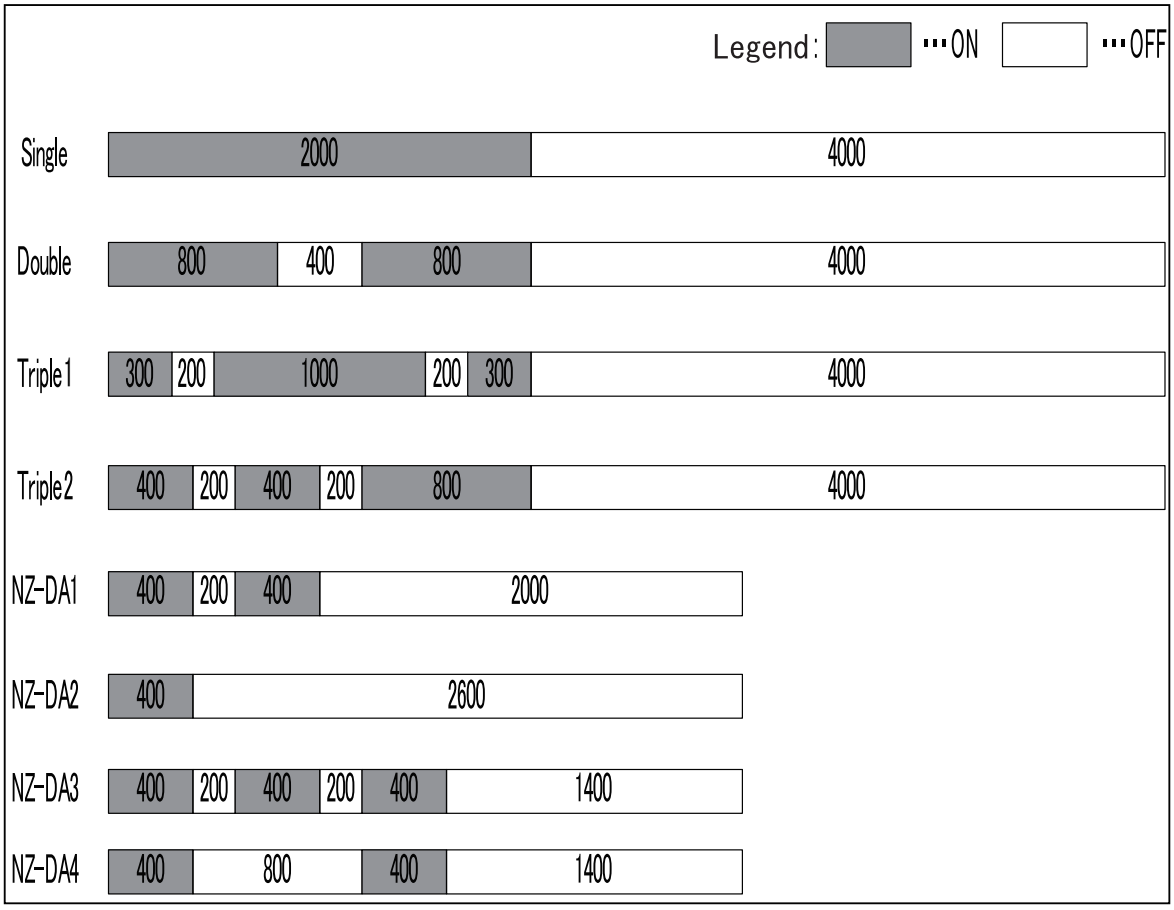


### 5.25.5 0e00d#

| Address | Items | Bit No | Contents | Setting | Default | | | CSRC | |
|---|---|---|---|---|---|---|---|---|---|
| | | | | | Japan | North America | Europe | Command | Parameter |
| 0e00d0 | DRPD max. adjustment value for max. OFF time | 7 | DRPD max. adjustment value for max. OFF time (100-ms increments, HEX) | - | 0x05 | 0x05 | 0x05 | XB | 40 |
| | | 6 | | | | | | | |
| | | 5 | | | | | | | |
| | | 4 | | | | | | | |
| | | 3 | | | | | | | |
| | | 2 | | | | | | | |
| | | 1 | | | | | | | |
| | | 0 | | | | | | | |
| 0e00d1 | DRPD min. adjustment value for max. OFF time | 7 | DRPD ringer min. adjustment value for max. OFF time (100-ms increments, HEX) | - | 0x05 | 0x05 | 0x05 | XB | 41 |
| | | 6 | | | | | | | |
| | | 5 | | | | | | | |
| | | 4 | | | | | | | |
| | | 3 | | | | | | | |
| | | 2 | | | | | | | |
| | | 1 | | | | | | | |
| | | 0 | | | | | | | |
| 0e00d2 | DRPD single ring stop detection time | 7 | DRPD single ring stop detection time (100-ms increments, HEX) | - | 0x50 | 0x50 | 0x50 | XB | 42 |
| | | 6 | | | | | | | |
| | | 5 | | | | | | | |
| | | 4 | | | | | | | |
| | | 3 | | | | | | | |
| | | 2 | | | | | | | |
| | | 1 | | | | | | | |
| | | 0 | | | | | | | |
| 0e00d3 | DRPD double ring stop detection time | 7 | DRPD double ring stop detection time (100-ms increments, HEX) | - | 0x50 | 0x50 | 0x50 | XB | 43 |
| | | 6 | | | | | | | |
| | | 5 | | | | | | | |

| Address | Items | Bit No | Contents | Setting | Default | | | CSRC | |
|---|---|---|---|---|---|---|---|---|---|
| | | | | | Japan | North America | Europe | Command | Parameter |
| | | 4 | | | | | | | |
| | | 3 | | | | | | | |
| | | 2 | | | | | | | |
| | | 1 | | | | | | | |
| | | 0 | | | | | | | |
| 0e00d4 | DRPD Triple1 ring stop detection time | 7 | DRPD Triple1 ring stop detection time (100-ms increments, HEX) | - | 0x50 | 0x50 | 0x50 | XB | 44 |
| | | 6 | | | | | | | |
| | | 5 | | | | | | | |
| | | 4 | | | | | | | |
| | | 3 | | | | | | | |
| | | 2 | | | | | | | |
| | | 1 | | | | | | | |
| | | 0 | | | | | | | |
| 0e00d5 | DRPD Triple2 ring stop detection time | 7 | DRPD Triple2 ring stop detection time (100-ms increments, HEX) | - | 0x50 | 0x50 | 0x50 | XB | 45 |
| | | 6 | | | | | | | |
| | | 5 | | | | | | | |
| | | 4 | | | | | | | |
| | | 3 | | | | | | | |
| | | 2 | | | | | | | |
| | | 1 | | | | | | | |
| | | 0 | | | | | | | |
| 0e00d6 | DRPD NZ-DA1 ring stop detection time | 7 | DRPD NZ-DA1 ring stop detection time (100-ms increments, HEX) | - | 0x3C | 0x3C | 0x3C | XB | 46 |
| | | 6 | | | | | | | |
| | | 5 | | | | | | | |
| | | 4 | | | | | | | |
| | | 3 | | | | | | | |
| | | 2 | | | | | | | |
| | | 1 | | | | | | | |
| | | 0 | | | | | | | |
| 0e00d7 | DRPD NZ-DA2 ring stop detection time | 7 | DRPD NZ-DA2 ring stop detection time (100-ms increments, HEX) | - | 0x3C | 0x3C | 0x3C | XB | 47 |
| | | 6 | | | | | | | |
| | | 5 | | | | | | | |
| | | 4 | | | | | | | |
| | | 3 | | | | | | | |
| | | 2 | | | | | | | |
| | | 1 | | | | | | | |
| | | 0 | | | | | | | |
| 0e00d8 | DRPD NZ-DA3 ring stop detection time | 7 | DRPD NZ-DA3 ring stop detection time (100-ms increments, HEX) | - | 0x32 | 0x32 | 0x32 | XB | 48 |
| | | 6 | | | | | | | |
| | | 5 | | | | | | | |
| | | 4 | | | | | | | |
| | | 3 | | | | | | | |
| | | 2 | | | | | | | |
| | | 1 | | | | | | | |
| | | 0 | | | | | | | |
| 0e00d9 | DRPD NZ-DA4 ring stop detection time | 7 | DRPD NZ-DA4 ring stop detection time (100-ms increments, HEX) | - | 0x32 | 0x32 | 0x32 | XB | 49 |
| | | 6 | | | | | | | |
| | | 5 | | | | | | | |
| | | 4 | | | | | | | |
| | | 3 | | | | | | | |
| | | 2 | | | | | | | |
| | | 1 | | | | | | | |
| | | 0 | | | | | | | |
| 0e00da | Custom 1s ringer ON time specified value | 7 | Custom 1st ringer ON time specified value (100-ms increments, HEX) | - | 0x00 | 0x00 | 0x00 | XB | 4A |
| | | 6 | | | | | | | |

| Address | Items | Bit No | Contents | Setting | Default | | | CSRC | |
|---|---|---|---|---|---|---|---|---|---|
| | | | | | Japan | North America | Europe | Command | Parameter |
| | | 5 | | | | | | | |
| | | 4 | | | | | | | |
| | | 3 | | | | | | | |
| | | 2 | | | | | | | |
| | | 1 | | | | | | | |
| | | 0 | | | | | | | |
| 0e00db | Custom 1st ringer OFF time specified value | 7 | Custom 1st ringer OFF time specified value (100-ms increments, HEX) | - | 0x00 | 0x00 | 0x00 | XB | 4B |
| | | 6 | | | | | | | |
| | | 5 | | | | | | | |
| | | 4 | | | | | | | |
| | | 3 | | | | | | | |
| | | 2 | | | | | | | |
| | | 1 | | | | | | | |
| | | 0 | | | | | | | |
| 0e00dc | Custom 2nd ringer ON time specified value | 7 | Custom 2nd ringer ON time specified value (100-ms increments, HEX) | - | 0x00 | 0x00 | 0x00 | XB | 4C |
| | | 6 | | | | | | | |
| | | 5 | | | | | | | |
| | | 4 | | | | | | | |
| | | 3 | | | | | | | |
| | | 2 | | | | | | | |
| | | 1 | | | | | | | |
| | | 0 | | | | | | | |
| 0e00dd | Custom 2nd ringer OFF time specified value | 7 | Custom 2nd ringer OFF time specified value (100-ms increments, HEX) | - | 0x00 | 0x00 | 0x00 | XB | 4D |
| | | 6 | | | | | | | |
| | | 5 | | | | | | | |
| | | 4 | | | | | | | |
| | | 3 | | | | | | | |
| | | 2 | | | | | | | |
| | | 1 | | | | | | | |
| | | 0 | | | | | | | |
| 0e00de | Custom 3rd ringer ON time specified value | 7 | Custom 3rd ringer ON time specified value (100-ms increments, HEX) | - | 0x00 | 0x00 | 0x00 | XB | 4E |
| | | 6 | | | | | | | |
| | | 5 | | | | | | | |
| | | 4 | | | | | | | |
| | | 3 | | | | | | | |
| | | 2 | | | | | | | |
| | | 1 | | | | | | | |
| | | 0 | | | | | | | |
| 0e00df | Custom 3rd ringer OFF time specified value | 7 | Custom 3rd ringer OFF time specified value (100-ms increments, HEX) | - | 0x00 | 0x00 | 0x00 | XB | 4F |
| | | 6 | | | | | | | |
| | | 5 | | | | | | | |
| | | 4 | | | | | | | |
| | | 3 | | | | | | | |
| | | 2 | | | | | | | |
| | | 1 | | | | | | | |
| | | 0 | | | | | | | |

### 5.25.6 0e00e#

| Address | Items | Bit No | Contents | Setting | Default | | | CSRC | |
|---|---|---|---|---|---|---|---|---|---|
| | | | | | Japan | North America | Europe | Command | Parameter |
| 0e00e0 | Custom Ring OFF detection time | 7 | Custom Ring OFF detection time (in 100-ms increments, HEX) | - | 0x00 | 0x00 | 0x00 | XB | 50 |
| | | 6 | | | | | | | |
| | | 5 | | | | | | | |
| | | 4 | | | | | | | |

| Address | Items | Bit No | Contents | Setting | Default | | | CSRC | |
|---|---|---|---|---|---|---|---|---|---|
| | | | | | Japan | North America | Europe | Command | Parameter |
| | | 3 | | | | | | | |
| | | 2 | | | | | | | |
| | | 1 | | | | | | | |
| | | 0 | | | | | | | |
| 0e00e1 | PB dial signal transmission time | 7 | PB dial signal transmission time (unit: 5 ms, HEX) | - | 0x15 | 0x19 | 0x15 | XB | 51 |
| | | 6 | | | | | | | |
| | | 5 | | | | | | | |
| | | 4 | | | | | | | |
| | | 3 | | | | | | | |
| | | 2 | | | | | | | |
| | | 1 | | | | | | | |
| | | 0 | | | | | | | |
| 0e00e2 | PB dial inter-digit pause | 7 | PB dial inter digit pause time (unit: 5 ms, HEX) | - | 0x11 | 0x15 | 0x11 | XB | 52 |
| | | 6 | | | | | | | |
| | | 5 | | | | | | | |
| | | 4 | | | | | | | |
| | | 3 | | | | | | | |
| | | 2 | | | | | | | |
| | | 1 | | | | | | | |
| | | 0 | | | | | | | |
| 0e00e3 | 10 pps pulse dial time | 7 | 10 pps pulse dial time | - | 0x0F | 0x12 | 0x12 | XB | 53 |
| | | 6 | | | | | | | |
| | | 5 | | | | | | | |
| | | 4 | | | | | | | |
| | | 3 | | | | | | | |
| | | 2 | | | | | | | |
| | | 1 | | | | | | | |
| | | 0 | | | | | | | |
| 0e00e4 | 10 pps pulse dial break time | 7 | 10 pps pulse dial break time | - | 0x1F | 0x1C | 0x1C | XB | 54 |
| | | 6 | | | | | | | |
| | | 5 | | | | | | | |
| | | 4 | | | | | | | |
| | | 3 | | | | | | | |
| | | 2 | | | | | | | |
| | | 1 | | | | | | | |
| | | 0 | | | | | | | |
| 0e00e5 | 10 pps pulse dial inter-digit pause | 7 | 10 pps pulse dial inter digit pause (unit: 10 ms, HEX) | - | 0x68 | 0x68 | 0x5e | XB | 55 |
| | | 6 | | | | | | | |
| | | 5 | | | | | | | |
| | | 4 | | | | | | | |
| | | 3 | | | | | | | |
| | | 2 | | | | | | | |
| | | 1 | | | | | | | |
| | | 0 | | | | | | | |
| 0e00e6 | 20 pps pulse dial time | 7 | 20 pps pulse dial time | - | 0x07 | 0x09 | 0x09 | XB | 56 |
| | | 6 | | | | | | | |
| | | 5 | | | | | | | |
| | | 4 | | | | | | | |
| | | 3 | | | | | | | |
| | | 2 | | | | | | | |
| | | 1 | | | | | | | |
| | | 0 | | | | | | | |
| 0e00e7 | 20 pps pulse dial break time | 7 | 20 pps pulse dial break time | - | 0x10 | 0x0E | 0x0E | XB | 57 |
| | | 6 | | | | | | | |
| | | 5 | | | | | | | |

| Address | Items | Bit No | Contents | Setting | Default | | | CSRC | |
|---|---|---|---|---|---|---|---|---|---|
| | | | | | Japan | North America | Europe | Command | Parameter |
| | | 4 | | | | | | | |
| | | 3 | | | | | | | |
| | | 2 | | | | | | | |
| | | 1 | | | | | | | |
| | | 0 | | | | | | | |
| 0e00e8 | 20 pps pulse dial inter-digit pause | 7 | 20 pps pulse dial inter digit pause (unit: 10 ms, HEX) | - | 0x59 | 0x40 | 0x5c | XB | 58 |
| | | 6 | | | | | | | |
| | | 5 | | | | | | | |
| | | 4 | | | | | | | |
| | | 3 | | | | | | | |
| | | 2 | | | | | | | |
| | | 1 | | | | | | | |
| | | 0 | | | | | | | |
| 0e00e9 | PB signal transmission level | 7 | PB signal transmission level (unit: 1 dBm, HEX) | Utility Mode Special Setting | 0x0a | 0x0a | 0x06 | XB | 59 |
| | | 6 | | | | | | | |
| | | 5 | | | | | | | |
| | | 4 | | | | | | | |
| | | 3 | | | | | | | |
| | | 2 | | | | | | | |
| | | 1 | | | | | | | |
| | | 0 | | | | | | | |
| 0e00ea | PB signal level difference (HL) | 7 | PB signal level difference (HL) (unit: 0.5 dBm, HEX) | Utility Mode Special Setting | 0x04 | 0x04 | 0x04 | XB | 5A |
| | | 6 | | | | | | | |
| | | 5 | | | | | | | |
| | | 4 | | | | | | | |
| | | 3 | | | | | | | |
| | | 2 | | | | | | | |
| | | 1 | | | | | | | |
| | | 0 | | | | | | | |
| 0e00eb | DCLOOP integration time at CML OFF | 7 | DCLOOP integration time at CML relay OFF (unit: 5 ms, HEX) (Lower limit 20 ms) | - | 0x50 | 0x50 | 0x50 | XB | 5B |
| | | 6 | | | | | | | |
| | | 5 | | | | | | | |
| | | 4 | | | | | | | |
| | | 3 | | | | | | | |
| | | 2 | | | | | | | |
| | | 1 | | | | | | | |
| | | 0 | | | | | | | |
| 0e00ec | DCLOOP integration time at CML ON | 7 | DCLOOP integration time at CML relay ON (unit: 5 ms, HEX) (Lower limit 20 ms) | - | 0x10 | 0x10 | 0x10 | XB | 5C |
| | | 6 | | | | | | | |
| | | 5 | | | | | | | |
| | | 4 | | | | | | | |
| | | 3 | | | | | | | |
| | | 2 | | | | | | | |
| | | 1 | | | | | | | |
| | | 0 | | | | | | | |
| 0e00ed | Pause time | 7 | | Utility Mode Special Setting (0-2) | 0x01 | 0x01 | 0x01 | XB | 5D |
| | | 6 | | | | | | | |
| | | 5 | | | | | | | |
| | | 4 | | | | | | | |
| | | 3 | | | | | | | |
| | | 2 | Pause time (unit:sec, HEX) | | | | | | |
| | | 1 | | | | | | | |
| | | 0 | | | | | | | |
| 0e00ee | DC-LOOP check mode | 7 | DC-LOOP check<br>0: No<br>1: Always | Utility Mode Special Setting (6,7) | 0x00 | 0x00 | 0x00 | XB | 5E |

| Address | Items | Bit No | Contents | Setting | Default | | | CSRC | |
|---|---|---|---|---|---|---|---|---|---|
| | | | | | Japan | North America | Europe | Command | Parameter |
| | | 6 | | | | | | | |
| | | 5 | | | | | | | |
| | | 4 | | | | | | | |
| | | 3 | | | | | | | |
| | | 2 | | | | | | | |
| | | 1 | | | | | | | |
| | | 0 | | | | | | | |
| 0e00ef | DC-LOOP waiting time | 7 | DC-LOOP waiting time (unit: 100 ms, HEX) | - | 0x00 | 0x00 | 0x00 | XB | 5F |
| | | 6 | | | | | | | |
| | | 5 | | | | | | | |
| | | 4 | | | | | | | |
| | | 3 | | | | | | | |
| | | 2 | | | | | | | |
| | | 1 | | | | | | | |
| | | 0 | | | | | | | |

### 5.25.7 0e00f#

| Address | Items | Bit No | Contents | Setting | Default | | | CSRC | |
|---|---|---|---|---|---|---|---|---|---|
| | | | | | Japan | North America | Europe | Command | Parameter |
| 0e00f0 | DC-LOOP instantaneous break allowable time (ph.A) | 7 | DC-LOOP instantaneous break allowable time (unit: 10 ms, HEX) (at the time of calling, CML ON to end of dialing) | - | 0x00 | 0x00 | 0x00 | XB | 60 |
| | | 6 | | | | | | | |
| | | 5 | | | | | | | |
| | | 4 | | | | | | | |
| | | 3 | | | | | | | |
| | | 2 | | | | | | | |
| | | 1 | | | | | | | |
| | | 0 | | | | | | | |
| 0e00f1 | DC-LOOP instantaneous break allowable time (ph.B) | 7 | DC-LOOP instantaneous break allowable time (unit: 10ms, HEX) (after completion of dialing and after CML ON at the time of reception) | - | 0x00 | 0x00 | 0x00 | XB | 61 |
| | | 6 | | | | | | | |
| | | 5 | | | | | | | |
| | | 4 | | | | | | | |
| | | 3 | | | | | | | |
| | | 2 | | | | | | | |
| | | 1 | | | | | | | |
| | | 0 | | | | | | | |
| 0e00f2 | Dial Mode<br>RING DET mode | 7 | | Utility Mode (0,1)<br>Utility Mode Special Setting (4,5) | 0x12 | 0x10 | 0x10 | XB | 62 |
| | | 6 | | | | | | | |
| | | 5 | RING detection mode<br>01: No. of times<br>10: Time | | | | | | |
| | | 4 | | | | | | | |
| | | 3 | Pulse format<br>00: General<br>01: SW<br>10: NO | | | | | | |
| | | 2 | | | | | | | |
| | | 1 | Dialing method<br>00: PB<br>01: 10pps<br>10: 20pps<br>11: 16pps | | | | | | |
| | | 0 | | | | | | | |
| 0e00f3 | 1st/2nd DT detection parameter | 7 | | - | 0x00 | 0x00 | 0x00 | XB | 63 |
| | | 6 | | | | | | | |
| | | 5 | | | | | | | |
| | | 4 | | | | | | | |
| | | 3 | At 2nd DT detection DP dialing only | | | | | | |
| | | 2 | | | | | | | |

| Address | Items | Bit No | Contents | Setting | Default | | | CSRC | |
|---|---|---|---|---|---|---|---|---|---|
| | | | | | Japan | North America | Europe | Command | Parameter |
| | | 1 | | | | | | | |
| | | 0 | 1st DT2 type | | | | | | |
| 0e00f4 | Tone detection | 7 | | Utility Mode Special Setting (4,5) | 0x11 | 0x11 | 0x01 | XB | 64 |
| | | 6 | | | | | | | |
| | | 5 | 1300 Hz<br>0: No<br>1: Yes | | | | | | |
| | | 4 | Busy Tone<br>0: No<br>1: Yes | | | | | | |
| | | 3 | PBX DT<br>0: No<br>1: Yes | | | | | | |
| | | 2 | 3rd DT<br>0: No<br>1: Yes | | | | | | |
| | | 1 | 2nd DT<br>0: No<br>1: Yes | | | | | | |
| | | 0 | 1st DT<br>0: No<br>1: Yes | | | | | | |
| 0e00f5 | No. of busy tone detection times | 7 | No. of busy tone detection times (HEX) | Utility Mode Special Setting | 0x02 | 0x02 | 0x00 | XB | 65 |
| | | 6 | | | | | | | |
| | | 5 | | | | | | | |
| | | 4 | | | | | | | |
| | | 3 | | | | | | | |
| | | 2 | | | | | | | |
| | | 1 | | | | | | | |
| | | 0 | | | | | | | |
| 0e00f6 | No. of RING detection times | 7 | No. of RING detection times (times, HEX) | Utility Mode | 0x02 | 0x02 | 0x02 | XB | 66 |
| | | 6 | | | | | | | |
| | | 5 | | | | | | | |
| | | 4 | | | | | | | |
| | | 3 | | | | | | | |
| | | 2 | | | | | | | |
| | | 1 | | | | | | | |
| | | 0 | | | | | | | |
| 0e00f7 | RING detection time | 7 | Ring detection time (sec, HEX) | Utility Mode Special Setting | 0x06 | 0x06 | 0x06 | XB | 67 |
| | | 6 | | | | | | | |
| | | 5 | | | | | | | |
| | | 4 | | | | | | | |
| | | 3 | | | | | | | |
| | | 2 | | | | | | | |
| | | 1 | | | | | | | |
| | | 0 | | | | | | | |
| 0e00f8 | Remote station response waiting time | 7 | Remote station response waiting time at calling (unit:sec, HEX) | Utility Mode Special Setting | 0x37 | 0x37 | 0x37 | XB | 68 |
| | | 6 | | | | | | | |
| | | 5 | | | | | | | |
| | | 4 | | | | | | | |
| | | 3 | | | | | | | |
| | | 2 | | | | | | | |
| | | 1 | | | | | | | |
| | | 0 | | | | | | | |
| 0e00f9 | Answering machine function | 7 | Answering machine CNG detection time (unit: 10 sec, HEX) (1-7) | Utility Mode Special Setting (4) | 0x64 | 0x64 | 0x64 | XB | 69 |
| | | 6 | | | | | | | |
| | | 5 | | | | | | | |

| Address | Items | Bit No | Contents | Setting | Default | | | CSRC | |
|---|---|---|---|---|---|---|---|---|---|
| | | | | | Japan | North America | Europe | Command | Parameter |
| | | 4 | Answer mode<br>0:OFF<br>1: ON | | | | | | |
| | | 3 | Answering machine DC-LOOP detection time (unit: 5 sec, HEX) (1-15) | | | | | | |
| | | 2 | | | | | | | |
| | | 1 | | | | | | | |
| | | 0 | | | | | | | |
| 0e00fa-0e00fb | Remote reception password | 7 | ASCII [2] | Utility Mode | 0x2a 0x20 | 0x2a 0x20 | 0x2a 0x20 | XB | 6a-6B |
| | | 6 | | | | | | | |
| | | 5 | | | | | | | |
| | | 4 | | | | | | | |
| | | 3 | | | | | | | |
| | | 2 | | | | | | | |
| | | 1 | | | | | | | |
| | | 0 | | | | | | | |
| 0e00fc | RBT transmission time | 7 | RingBackTone signal transmission time (unit: 1000 ms, HEX) | - | 0x14 | 0x14 | 0x14 | XB | 6C |
| | | 6 | | | | | | | |
| | | 5 | | | | | | | |
| | | 4 | | | | | | | |
| | | 3 | | | | | | | |
| | | 2 | | | | | | | |
| | | 1 | | | | | | | |
| | | 0 | | | | | | | |
| 0e00fd | CAR signal ON time max. value | 7 | CAR ON time max. value (unit: 20 ms, HEX) | - | 0x28 | 0x00 | 0x00 | XB | 6D |
| | | 6 | | | | | | | |
| | | 5 | | | | | | | |
| | | 4 | | | | | | | |
| | | 3 | | | | | | | |
| | | 2 | | | | | | | |
| | | 1 | | | | | | | |
| | | 0 | | | | | | | |
| 0e00fe | CAR signal ON time min. value | 7 | CAR ON time min. value (unit: 20 ms, HEX) | - | 0x0a | 0x00 | 0x00 | XB | 6E |
| | | 6 | | | | | | | |
| | | 5 | | | | | | | |
| | | 4 | | | | | | | |
| | | 3 | | | | | | | |
| | | 2 | | | | | | | |
| | | 1 | | | | | | | |
| | | 0 | | | | | | | |
| 0e00ff | CAR signal OFF time max. value | 7 | CAR OFF time max. value (unit: 20 ms, HEX) | - | 0x28 | 0x00 | 0x00 | XB | 6F |
| | | 6 | | | | | | | |
| | | 5 | | | | | | | |
| | | 4 | | | | | | | |
| | | 3 | | | | | | | |
| | | 2 | | | | | | | |
| | | 1 | | | | | | | |
| | | 0 | | | | | | | |

### 5.25.8 0e010#

| Address | Items | Bit No | Contents | Setting | Default | | | CSRC | |
|---|---|---|---|---|---|---|---|---|---|
| | | | | | Japan | North America | Europe | Command | Parameter |
| 0e0100 | CAR signal OFF time min. value | 7 | CAR OFF time min. value (unit: 20 ms, HEX) | - | 0x0a | 0x00 | 0x00 | XB | 70 |
| | | 6 | | | | | | | |
| | | 5 | | | | | | | |

| Address | Items | Bit No | Contents | Setting | Default | | | CSRC | |
|---|---|---|---|---|---|---|---|---|---|
| | | | | | Japan | North America | Europe | Command | Parameter |
| | | 4 | | | | | | | |
| | | 3 | | | | | | | |
| | | 2 | | | | | | | |
| | | 1 | | | | | | | |
| | | 0 | | | | | | | |
| 0e0101 | No. of CAR signal detection times | 7 | CAR (information receiving terminal start signal) detection frequency (times, HEX) | - | 0x01 | 0x00 | 0x00 | XB | 71 |
| | | 6 | | | | | | | |
| | | 5 | | | | | | | |
| | | 4 | | | | | | | |
| | | 3 | | | | | | | |
| | | 2 | | | | | | | |
| | | 1 | | | | | | | |
| | | 0 | | | | | | | |
| 0e0102 | Caller ID signal waiting time | 7 | ID waiting time after Caller ID/ DIAL IN primary response (unit 1000 ms, HEX) | - | 0x05 | 0x00 | 0x00 | XB | 72 |
| | | 6 | | | | | | | |
| | | 5 | | | | | | | |
| | | 4 | | | | | | | |
| | | 3 | | | | | | | |
| | | 2 | | | | | | | |
| | | 1 | | | | | | | |
| | | 0 | | | | | | | |
| 0e0103 | Remote reception password entry waiting time | 7 | Password signal (DTMF) detection waiting time (unit: 100 ms, HEX) | - | 0x14 | 0x14 | 0x14 | XB | 73 |
| | | 6 | | | | | | | |
| | | 5 | | | | | | | |
| | | 4 | | | | | | | |
| | | 3 | | | | | | | |
| | | 2 | | | | | | | |
| | | 1 | | | | | | | |
| | | 0 | | | | | | | |
| 0e0104 | Normal/number display automatic line distinction function | 7 | Automatic judgment function<br>0:OFF<br>1: ON | - | 0x83 | 0x00 | 0x00 | XB | 74 |
| | | 6 | | | | | | | |
| | | 5 | | | | | | | |
| | | 4 | | | | | | | |
| | | 3 | V23 signal detection waiting time when judged (x1 sec, HEX) | | | | | | |
| | | 2 | | | | | | | |
| | | 1 | | | | | | | |
| | | 0 | | | | | | | |
| 0e0105 | Monitor speaker (Transmission signal sound) | 7 | PB tone monitoring at the time of offhook | Utility Mode (0-6) | 0x03 | 0x03 | 0x03 | XB | 75 |
| | | 6 | Monitor speaker in communication<br>00: OFF<br>01: Up to DIS<br>10: Up to DIS + RBT transmissions<br>11: ON | | | | | | |
| | | 5 | | | | | | | |
| | | 4 | Speaker volume (HEX) (0-8) | | | | | | |
| | | 3 | | | | | | | |
| | | 2 | | | | | | | |
| | | 1 | | | | | | | |
| | | 0 | | | | | | | |
| 0e0106-0e010f | Numeric ID [20] | 7 | ASCII [20]<br>When ID is less than 20 digits, justify to the left and insert space at the top. (No NULL terminator) | Utility Mode | ALL 0x20 | ALL 0x20 | ALL 0x20 | XB | 76 |
| | | 6 | | | | | | | |
| | | 5 | | | | | | | |
| | | 4 | | | | | | | |
| | | 3 | | | | | | | |

| Address | Items | Bit No | Contents | Setting | Default | | | CSRC | |
|---|---|---|---|---|---|---|---|---|---|
| | | | | | Japan | North America | Europe | Command | Parameter |
| | | 2 | | | | | | | |
| | | 1 | | | | | | | |
| | | 0 | | | | | | | |

### 5.25.9 0e011#

| Address | Items | Bit No | Contents | Setting | Default | | | CSRC | |
|---|---|---|---|---|---|---|---|---|---|
| | | | | | Japan | North America | Europe | Command | Parameter |
| 0e0110-0e0119 | Numeric ID [20] | 7 | ASCII [20]<br>When ID is less than 20 digits, justify to the left and insert space at the top. (No NULL terminator) | Utility Mode | ALL 0x20 | ALL 0x20 | ALL 0x20 | XB | 80-89 |
| | | 6 | | | | | | | |
| | | 5 | | | | | | | |
| | | 4 | | | | | | | |
| | | 3 | | | | | | | |
| | | 2 | | | | | | | |
| | | 1 | | | | | | | |
| | | 0 | | | | | | | |
| 0e011a | PBX connection mode | 7 | | Utility Mode (0-3) | 0x0f | 0x0f | 0x0f | XB | 8A |
| | | 6 | | | | | | | |
| | | 5 | | | | | | | |
| | | 4 | | | | | | | |
| | | 3 | PBX call<br>0000 - 1001: keypad<br>1011: Reserved<br>1100: Reserved<br>1101: Reserved<br>1110: Reserved<br>1111: PBX unconnected | | | | | | |
| | | 2 | | | | | | | |
| | | 1 | | | | | | | |
| | | 0 | | | | | | | |
| 0e011b | Protocol monitor | 7 | | Utility Mode (5) | 0x00 | 0x00 | 0x00 | XB | 8B |
| | | 6 | | | | | | | |
| | | 5 | TEL/FAX switching RBT monitor sound<br>0: OFF<br>1: ON | | | | | | |
| | | 4 | Inhibit the speaker to sound when off-hook key is pressed<br>1: Inhibit<br>0: Not inhibit | | | | | | |
| | | 3 | | | | | | | |
| | | 2 | | | | | | | |
| | | 1 | | | | | | | |
| | | 0 | | | | | | | |
| 0e011c | Reception function (disable) | 7 | | Utility Mode (0-4) | 0x3f | 0x3f | 0x3f | XB | 8C |
| | | 6 | Auto transmission not available<br>0: Enable<br>1: Disable Manual RX | | | | | | |
| | | 5 | Name display<br>0: Not inhibit<br>1: Inhibit | | | | | | |
| | | 4 | Compulsory Memory RX<br>0: Not inhibit<br>1: Inhibit | | | | | | |
| | | 3 | No. of caller / name display (number display / (display of subscribers for trace-back system))<br>0: Not inhibit<br>1: Inhibit | | | | | | |
| | | 2 | Closed-area communication<br>0: Not inhibit<br>1: Inhibit | | | | | | |

| Address | Items | Bit No | Contents | Setting | Default | | | CSRC | |
|---|---|---|---|---|---|---|---|---|---|
| | | | | | Japan | North America | Europe | Command | Parameter |
| | | 1 | Remote RX<br>0: Not inhibit<br>1: Inhibit | | | | | | |
| | | 0 | Dialin<br>0: Not inhibit<br>1: Inhibit | | | | | | |
| 0e011d | PBX outside line access code 1 (BCD) | 7 | 1st digit | Utility Mode | 0xff | 0xff | 0xff | XB | 8D |
| | | 6 | | | | | | | |
| | | 5 | | | | | | | |
| | | 4 | | | | | | | |
| | | 3 | 2nd digit | | | | | | |
| | | 2 | | | | | | | |
| | | 1 | | | | | | | |
| | | 0 | | | | | | | |
| 0e011e | PBX outside line access code 2 (BCD) | 7 | 3rd digit | Utility Mode | 0xff | 0xff | 0xff | XB | 8E |
| | | 6 | | | | | | | |
| | | 5 | | | | | | | |
| | | 4 | | | | | | | |
| | | 3 | 4th digit | | | | | | |
| | | 2 | | | | | | | |
| | | 1 | | | | | | | |
| | | 0 | | | | | | | |
| 0e011f | Limit of long size reception | 7 | | - | 0x00 | 0x00 | 0x00 | XB | 8F |
| | | 6 | | | | | | | |
| | | 5 | | | | | | | |
| | | 4 | | | | | | | |
| | | 3 | | | | | | | |
| | | 2 | | | | | | | |
| | | 1 | | | | | | | |
| | | 0 | Limit of long size reception<br>0: Limit<br>1: Unlimited | | | | | | |

### 5.25.10 0e012#

| Address | Items | Bit No | Contents | Setting | Default | | | CSRC | |
|---|---|---|---|---|---|---|---|---|---|
| | | | | | Japan | North America | Europe | Command | Parameter |
| 0e0120 | Max. size of long original received (In the case of 400 dpi or less) | 7 | When the resolution for reception is 400 dpi or less, the size of a long original received that is regarded as an error (The maximum length is a decimal value x 10 mm. 0 is regarded as 1000 mm.) ) | - | 0x64 | 0x64 | 0x64 | XB | 90 |
| | | 6 | | | | | | | |
| | | 5 | | | | | | | |
| | | 4 | | | | | | | |
| | | 3 | | | | | | | |
| | | 2 | | | | | | | |
| | | 1 | | | | | | | |
| | | 0 | | | | | | | |
| 0e0121 | Max. size of long original received (In the case of 600 dpi) | 7 | When the resolution for reception is 600 dpi, the size of a long original received that is regarded as an error (The maximum length is a decimal value x 10 mm. 0 is regarded as 1000 mm.) ) | - | 0x64 | 0x64 | 0x64 | XB | 91 |
| | | 6 | | | | | | | |
| | | 5 | | | | | | | |
| | | 4 | | | | | | | |
| | | 3 | | | | | | | |
| | | 2 | | | | | | | |
| | | 1 | | | | | | | |
| | | 0 | | | | | | | |
| 0e0122 | Voice response output level adjustment | 7 | | - | 0x62 | 0x62 | 0x62 | XB | 92 |
| | | 6 | | | | | | | |
| | | 5 | | | | | | | |

| Address | Items | Bit No | Contents | Setting | Default | | | CSRC | |
|---|---|---|---|---|---|---|---|---|---|
| | | | | | Japan | North America | Europe | Command | Parameter |
| | | 4 | | | | | | | |
| | | 3 | Voice response volume (HEX) 0000: min - 1111: max | | | | | | |
| | | 2 | | | | | | | |
| | | 1 | | | | | | | |
| | | 0 | | | | | | | |
| 0e0123 | Monitor speaker (Received signal sound) | 7 | | Utility Mode (0-4) | 0x04 | 0x04 | 0x04 | XB | 93 |
| | | 6 | | | | | | | |
| | | 5 | | | | | | | |
| | | 4 | Speaker volume (HEX) (0-8) | | | | | | |
| | | 3 | | | | | | | |
| | | 2 | | | | | | | |
| | | 1 | | | | | | | |
| | | 0 | | | | | | | |
| 0e0124 - 0e0129 | Reserved area | 7 | | - | ALL 0x00 | ALL 0x00 | ALL 0x00 | XB | 94 - 99 |
| | | 6 | | | | | | | |
| | | 5 | | | | | | | |
| | | 4 | | | | | | | |
| | | 3 | | | | | | | |
| | | 2 | | | | | | | |
| | | 1 | | | | | | | |
| | | 0 | | | | | | | |

### 5.25.11 0f000#

| Address | Items | Bit No | Contents | Setting | Default | | | CSRC | |
|---|---|---|---|---|---|---|---|---|---|
| | | | | | Japan | North America | Europe | Command | Parameter |
| 0f0000 | Reception main scan line resolution ability [0] | 7 | 400 dpi | - | 0xaa | 0xaa | 0xaa | X2 | 00 |
| | | 6 | 300 dpi | | | | | | |
| | | 5 | 200 dpi | | | | | | |
| | | 4 | | | | | | | |
| | | 3 | 16 pels/mm | | | | | | |
| | | 2 | | | | | | | |
| | | 1 | 8 pels/mm | | | | | | |
| | | 0 | | | | | | | |
| 0f0001 | Reception main scan line resolution ability [1] | 7 | | - | 0x01 | 0x01 | 0x01 | X2 | 01 |
| | | 6 | | | | | | | |
| | | 5 | | | | | | | |
| | | 4 | | | | | | | |
| | | 3 | | | | | | | |
| | | 2 | (1200 dpi) | | | | | | |
| | | 1 | 800 dpi | | | | | | |
| | | 0 | 600 dpi | | | | | | |
| 0f0002 | Reception sub scanning resolution ability [0] | 7 | 400 dpi | - | 0xbb | 0xbb | 0xbb | X2 | 02 |
| | | 6 | 300 dpi | | | | | | |
| | | 5 | 200 dpi | | | | | | |
| | | 4 | 100 dpi | | | | | | |
| | | 3 | 15.4 l/mm | | | | | | |
| | | 2 | | | | | | | |
| | | 1 | 7.7 l/mm | | | | | | |
| | | 0 | 3.85 l/mm | | | | | | |
| 0f0003 | Reception sub scanning resolution ability [1] | 7 | | - | 0x01 | 0x01 | 0x01 | X2 | 03 |
| | | 6 | | | | | | | |
| | | 5 | | | | | | | |
| | | 4 | | | | | | | |
| | | 3 | | | | | | | |

| Address | Items | Bit No | Contents | Setting | Default | | | CSRC | |
|---|---|---|---|---|---|---|---|---|---|
| | | | | | Japan | North America | Europe | Command | Parameter |
| | | 2 | (1200 dpi) | | | | | | |
| | | 1 | 800 dpi | | | | | | |
| | | 0 | 600 dpi | | | | | | |
| 0f0004 | Reception coding method ability | 7 | | - | 0x1f | 0x1f | 0x1f | X2 | 04 |
| | | 6 | | | | | | | |
| | | 5 | (JPEG) | | | | | | |
| | | 4 | JBIG | | | | | | |
| | | 3 | MMR | | | | | | |
| | | 2 | MR | | | | | | |
| | | 1 | MH | | | | | | |
| | | 0 | THRU | | | | | | |
| 0f0005 | Received document width ability | 7 | | - | 0x0e | 0x0e | 0x0e | X2 | 05 |
| | | 6 | | | | | | | |
| | | 5 | (Legal) | | | | | | |
| | | 4 | (Letter) | | | | | | |
| | | 3 | A3 | | | | | | |
| | | 2 | B4 | | | | | | |
| | | 1 | A4 | | | | | | |
| | | 0 | (A5) | | | | | | |
| 0f0006 | Received document length ability | 7 | | - | 0x46 | 0x46 | 0x46 | X2 | 06 |
| | | 6 | Unlimited | | | | | | |
| | | 5 | (Legal) | | | | | | |
| | | 4 | (Letter) | | | | | | |
| | | 3 | | | | | | | |
| | | 2 | B4 | | | | | | |
| | | 1 | A4 | | | | | | |
| | | 0 | (A5) | | | | | | |
| 0f0007 | Reception speed ability [0] | 7 | | - | 0x1b | 0x1b | 0x1b | X2 | 07 |
| | | 6 | | | | | | | |
| | | 5 | | | | | | | |
| | | 4 | V.29-96 | | | | | | |
| | | 3 | V.29-72 | | | | | | |
| | | 2 | | | | | | | |
| | | 1 | V.27-48 | | | | | | |
| | | 0 | V.27-24 | | | | | | |
| 0f0008 | Reception speed ability [1] | 7 | V.17-144 | - | 0xf0 | 0xf0 | 0xf0 | X2 | 08 |
| | | 6 | V.17-120 | | | | | | |
| | | 5 | V.17-96 | | | | | | |
| | | 4 | V.17-72 | | | | | | |
| | | 3 | V.33-144 | | | | | | |
| | | 2 | V.33-120 | | | | | | |
| | | 1 | (TCM-96) | | | | | | |
| | | 0 | (TCM-72) | | | | | | |
| 0f0009 | Reception speed ability [2] | 7 | V.34-192 | - | 0xff | 0xff | 0xff | X2 | 09 |
| | | 6 | V.34-168 | | | | | | |
| | | 5 | V.34-144 | | | | | | |
| | | 4 | V.34-120 | | | | | | |
| | | 3 | V.34-96 | | | | | | |
| | | 2 | V.34-72 | | | | | | |
| | | 1 | V.34-48 | | | | | | |
| | | 0 | V.34-24 | | | | | | |
| 0f000a | Reception speed ability [3] | 7 | | - | 0x3f | 0x3f | 0x3f | X2 | 0A |
| | | 6 | | | | | | | |
| | | 5 | V.34-336 | | | | | | |
| | | 4 | V.34-312 | | | | | | |

| Address | Items | Bit No | Contents | Setting | Default | | | CSRC | |
|---|---|---|---|---|---|---|---|---|---|
| | | | | | Japan | North America | Europe | Command | Parameter |
| | | 3 | V.34-288 | | | | | | |
| | | 2 | V.34-264 | | | | | | |
| | | 1 | V.34-240 | | | | | | |
| | | 0 | V.34-216 | | | | | | |
| 0f000b | Reception MSLT ability | 7 | T3.85 or 200 x 100dpi (0-40) ms unit | - | 0x05 | 0x05 | 0x05 | X2 | 0B |
| | | 6 | | | | | | | |
| | | 5 | | | | | | | |
| | | 4 | | | | | | | |
| | | 3 | | | | | | | |
| | | 2 | | | | | | | |
| | | 1 | | | | | | | |
| | | 0 | | | | | | | |
| 0f000c | Reception MSLT ability | 7 | T7.7 or 200 x 200dpi (0-40) ms unit | - | 0x05 | 0x05 | 0x05 | X2 | 0C |
| | | 6 | | | | | | | |
| | | 5 | | | | | | | |
| | | 4 | | | | | | | |
| | | 3 | | | | | | | |
| | | 2 | | | | | | | |
| | | 1 | | | | | | | |
| | | 0 | | | | | | | |
| 0f000d | Reception MSLT ability | 7 | T11.55 or 300 x 300dpi (0-40) ms unit | - | 0x05 | 0x05 | 0x05 | X2 | 0D |
| | | 6 | | | | | | | |
| | | 5 | | | | | | | |
| | | 4 | | | | | | | |
| | | 3 | | | | | | | |
| | | 2 | | | | | | | |
| | | 1 | | | | | | | |
| | | 0 | | | | | | | |
| 0f000e | Reception MSLT ability | 7 | T15.4 or 400 x 400dpi or 600 x 600dpi (0-40) ms unit | - | 0x05 | 0x05 | 0x05 | X2 | 0E |
| | | 6 | | | | | | | |
| | | 5 | | | | | | | |
| | | 4 | | | | | | | |
| | | 3 | | | | | | | |
| | | 2 | | | | | | | |
| | | 1 | | | | | | | |
| | | 0 | | | | | | | |
| 0f000f | Reception ECM ability | 7 | | - | 0x01 | 0x01 | 0x01 | X2 | 0F |
| | | 6 | | | | | | | |
| | | 5 | | | | | | | |
| | | 4 | | | | | | | |
| | | 3 | | | | | | | |
| | | 2 | | | | | | | |
| | | 1 | | | | | | | |
| | | 0 | ECM reception capability<br>0:OFF<br>1: ON | | | | | | |

### 5.25.12 0f001#

| Address | Items | Bit No | Contents | Setting | Default | | | CSRC | |
|---|---|---|---|---|---|---|---|---|---|
| | | | | | Japan | North America | Europe | Command | Parameter |
| 0f0010 | Reception protocol ability | 7 | | - | 0x39 | 0x39 | 0x39 | X2 | 10 |
| | | 6 | | | | | | | |
| | | 5 | FAX-CSRC | | | | | | |
| | | 4 | V.8/V.34 | | | | | | |

| Address | Items | Bit No | Contents | Setting | Default | | | CSRC | |
|---|---|---|---|---|---|---|---|---|---|
| | | | | | Japan | North America | Europe | Command | Parameter |
| | | 3 | DIAG | | | | | | |
| | | 2 | | | | | | | |
| | | 1 | | | | | | | |
| | | 0 | G3S | | | | | | |
| 0f0011 | Reception option frame ability | 7 | | - | 0x07 | 0x07 | 0x07 | X2 | 11 |
| | | 6 | | | | | | | |
| | | 5 | | | | | | | |
| | | 4 | (BFT) | | | | | | |
| | | 3 | (BTM) | | | | | | |
| | | 2 | PWD | | | | | | |
| | | 1 | (SEP) | | | | | | |
| | | 0 | SUB | | | | | | |
| 0f0012 - 0f001f | Reserved area | 7 | | - | ALL 0x00 | ALL 0x00 | ALL 0x00 | X2 | 12 - 1F |
| | | 6 | | | | | | | |
| | | 5 | | | | | | | |
| | | 4 | | | | | | | |
| | | 3 | | | | | | | |
| | | 2 | | | | | | | |
| | | 1 | | | | | | | |
| | | 0 | | | | | | | |

### 5.25.13 10000#

| Address | Items | Bit No | Contents | Setting | Default | | | CSRC | |
|---|---|---|---|---|---|---|---|---|---|
| | | | | | Japan | North America | Europe | Command | Parameter |
| 100000 | Transmission main scan line resolution instruction [0] | 7 | 400 dpi | - | 0x22 | 0x22 | 0x22 | X2 | 40 |
| | | 6 | 300 dpi | | | | | | |
| | | 5 | 200 dpi | | | | | | |
| | | 4 | | | | | | | |
| | | 3 | 16 pels/mm | | | | | | |
| | | 2 | | | | | | | |
| | | 1 | 8 pels/mm | | | | | | |
| | | 0 | | | | | | | |
| 100001 | Transmission main scan line resolution instruction [1] | 7 | | - | 0x01 | 0x01 | 0x01 | X2 | 41 |
| | | 6 | | | | | | | |
| | | 5 | | | | | | | |
| | | 4 | | | | | | | |
| | | 3 | | | | | | | |
| | | 2 | (1200 dpi) | | | | | | |
| | | 1 | 800 dpi | | | | | | |
| | | 0 | 600 dpi | | | | | | |
| 100002 | Transmission sub scanning resolution instruction [0] | 7 | 400 dpi | - | 0x11 | 0x11 | 0x11 | X2 | 42 |
| | | 6 | 300 dpi | | | | | | |
| | | 5 | 200 dpi | | | | | | |
| | | 4 | 100 dpi | | | | | | |
| | | 3 | 15.4 l/mm | | | | | | |
| | | 2 | | | | | | | |
| | | 1 | 7.7 l/mm | | | | | | |
| | | 0 | 3.85 l/mm | | | | | | |
| 100003 | Transmission sub scanning resolution instruction [1] | 7 | | - | 0x01 | 0x01 | 0x01 | X2 | 43 |
| | | 6 | | | | | | | |
| | | 5 | | | | | | | |
| | | 4 | | | | | | | |
| | | 3 | | | | | | | |
| | | 2 | (1200 dpi) | | | | | | |

| Address | Items | Bit No | Contents | Setting | Default | | | CSRC | |
|---|---|---|---|---|---|---|---|---|---|
| | | | | | Japan | North America | Europe | Command | Parameter |
| | | 1 | 800 dpi | | | | | | |
| | | 0 | 600 dpi | | | | | | |
| 100004 | Transmission coding method instruction | 7 | | - | 0x1f | 0x1f | 0x1f | X2 | 44 |
| | | 6 | | | | | | | |
| | | 5 | (JPEG) | | | | | | |
| | | 4 | JBIG | | | | | | |
| | | 3 | MMR | | | | | | |
| | | 2 | MR | | | | | | |
| | | 1 | MH | | | | | | |
| | | 0 | THRU | | | | | | |
| 100005 | Transmission document width instruction | 7 | | - | 0x0e | 0x0e | 0x0e | X2 | 45 |
| | | 6 | | | | | | | |
| | | 5 | (Legal) | | | | | | |
| | | 4 | (Letter) | | | | | | |
| | | 3 | A3 | | | | | | |
| | | 2 | B4 | | | | | | |
| | | 1 | A4 | | | | | | |
| | | 0 | (A5) | | | | | | |
| 100006 | Transmission document length instruction | 7 | | - | 0x46 | 0x46 | 0x46 | X2 | 46 |
| | | 6 | Unlimited | | | | | | |
| | | 5 | (Legal) | | | | | | |
| | | 4 | (Letter) | | | | | | |
| | | 3 | | | | | | | |
| | | 2 | B4 | | | | | | |
| | | 1 | A4 | | | | | | |
| | | 0 | (A5) | | | | | | |
| 100007 | Transmission speed instruction [0] | 7 | | - | 0x1b | 0x1b | 0x1b | X2 | 47 |
| | | 6 | | | | | | | |
| | | 5 | | | | | | | |
| | | 4 | V.29-96 | | | | | | |
| | | 3 | V.29-72 | | | | | | |
| | | 2 | | | | | | | |
| | | 1 | V.27-48 | | | | | | |
| | | 0 | V.27-24 | | | | | | |
| 100008 | Transmission speed instruction [1] | 7 | V.17-144 | - | 0xf0 | 0xf0 | 0xf0 | X2 | 48 |
| | | 6 | V.17-120 | | | | | | |
| | | 5 | V.17-96 | | | | | | |
| | | 4 | V.17-72 | | | | | | |
| | | 3 | V.33-144 | | | | | | |
| | | 2 | V.33-120 | | | | | | |
| | | 1 | (TCM-96) | | | | | | |
| | | 0 | (TCM-72) | | | | | | |
| 100009 | Transmission speed instruction [2] | 7 | V.34-192 | - | 0xff | 0xff | 0xff | X2 | 49 |
| | | 6 | V.34-168 | | | | | | |
| | | 5 | V.34-144 | | | | | | |
| | | 4 | V.34-120 | | | | | | |
| | | 3 | V.34-96 | | | | | | |
| | | 2 | V.34-72 | | | | | | |
| | | 1 | V.34-48 | | | | | | |
| | | 0 | V.34-24 | | | | | | |
| 10000a | Transmission speed instruction [3] | 7 | | - | 0x3f | 0x3f | 0x3f | X2 | 4A |
| | | 6 | | | | | | | |
| | | 5 | V.34-336 | | | | | | |
| | | 4 | V.34-312 | | | | | | |
| | | 3 | V.34-288 | | | | | | |

| Address | Items | Bit No | Contents | Setting | Default | | | CSRC | |
|---|---|---|---|---|---|---|---|---|---|
| | | | | | Japan | North America | Europe | Command | Parameter |
| | | 2 | V.34-264 | | | | | | |
| | | 1 | V.34-240 | | | | | | |
| | | 0 | V.34-216 | | | | | | |
| 10000b | Transmission MSLT instruction | 7 | T3.85 or 200 x 100dpi (0-40) ms unit | - | 0x05 | 0x05 | 0x05 | X2 | 4B |
| | | 6 | | | | | | | |
| | | 5 | | | | | | | |
| | | 4 | | | | | | | |
| | | 3 | | | | | | | |
| | | 2 | | | | | | | |
| | | 1 | | | | | | | |
| | | 0 | | | | | | | |
| 10000c | Transmission MSLT instruction | 7 | T7.7 or 200 x 200dpi (0-40) ms unit | - | 0x05 | 0x05 | 0x05 | X2 | 4C |
| | | 6 | | | | | | | |
| | | 5 | | | | | | | |
| | | 4 | | | | | | | |
| | | 3 | | | | | | | |
| | | 2 | | | | | | | |
| | | 1 | | | | | | | |
| | | 0 | | | | | | | |
| 10000d | Transmission MSLT instruction | 7 | T11.55 or 300 x 300dpi (0-40) ms unit | - | 0x05 | 0x05 | 0x05 | X2 | 4D |
| | | 6 | | | | | | | |
| | | 5 | | | | | | | |
| | | 4 | | | | | | | |
| | | 3 | | | | | | | |
| | | 2 | | | | | | | |
| | | 1 | | | | | | | |
| | | 0 | | | | | | | |
| 10000e | Transmission MSLT instruction | 7 | T15.4 or 400 x 400dpi or 600 x 600dpi (0-40) ms unit | - | 0x05 | 0x05 | 0x05 | X2 | 4E |
| | | 6 | | | | | | | |
| | | 5 | | | | | | | |
| | | 4 | | | | | | | |
| | | 3 | | | | | | | |
| | | 2 | | | | | | | |
| | | 1 | | | | | | | |
| | | 0 | | | | | | | |
| 10000f | Transmission ECM instruction | 7 | | - | 0x01 | 0x01 | 0x01 | X2 | 4F |
| | | 6 | | | | | | | |
| | | 5 | | | | | | | |
| | | 4 | | | | | | | |
| | | 3 | | | | | | | |
| | | 2 | | | | | | | |
| | | 1 | ECM transmission frame size<br>0: 256<br>1: 64 | | | | | | |
| | | 0 | ECM transmission instruction<br>0: OFF<br>1: ON | | | | | | |

### 5.25.14 10001#

| Address | Items | Bit No | Contents | Setting | Default | | | CSRC | |
|---|---|---|---|---|---|---|---|---|---|
| | | | | | Japan | North America | Europe | Command | Parameter |
| 100010 | Transmission protocol instruction | 7 | | - | 0x11 | 0x11 | 0x11 | X2 | 50 |
| | | 6 | | | | | | | |
| | | 5 | FAX-CSRC | | | | | | |
| | | 4 | V.8/V.34 | | | | | | |

| Address | Items | Bit No | Contents | Setting | Default | | | CSRC | |
|---|---|---|---|---|---|---|---|---|---|
| | | | | | Japan | North America | Europe | Command | Parameter |
| | | 3 | DIAG | | | | | | |
| | | 2 | | | | | | | |
| | | 1 | | | | | | | |
| | | 0 | G3S | | | | | | |
| 100011 | Transmission option frame instruction | 7 | | - | 0x00 | 0x00 | 0x00 | X2 | 51 |
| | | 6 | | | | | | | |
| | | 5 | | | | | | | |
| | | 4 | (BFT) | | | | | | |
| | | 3 | (BTM) | | | | | | |
| | | 2 | PWD | | | | | | |
| | | 1 | (SEP) | | | | | | |
| | | 0 | SUB | | | | | | |
| 100012 - 10001f | Reserved area | 7 | | - | ALL 0x00 | ALL 0x00 | ALL 0x00 | X2 | 52 - 5F |
| | | 6 | | | | | | | |
| | | 5 | | | | | | | |
| | | 4 | | | | | | | |
| | | 3 | | | | | | | |
| | | 2 | | | | | | | |
| | | 1 | | | | | | | |
| | | 0 | | | | | | | |

## 5.26 FAX setting (Address parameter list: for line 2)

### 5.26.1 0e01a#

| Address | Items | Bit No | Contents | Setting | Default | | | CSRC | |
|---|---|---|---|---|---|---|---|---|---|
| | | | | | Japan | North America | Europe | Command | Parameter |
| 0e01a0 | Transmission ATT | 7 | Tone signal/FSK transmission ATT (HEX) every 1 dBm (0 to -15dBm) | Utility Mode Special Setting | 0xaa | 0xaa | 0xaa | XB | 00 |
| | | 6 | | | | | | | |
| | | 5 | | | | | | | |
| | | 4 | | | | | | | |
| | | 3 | High-speed signal transmission ATT (HEX) every 1 dBm (0 to -15dBm) | | | | | | |
| | | 2 | | | | | | | |
| | | 1 | | | | | | | |
| | | 0 | | | | | | | |
| 0e01a1 | CED transmission ATT | 7 | | Utility Mode Special Setting (0-3) | 0x0a | 0x0a | 0x0a | XB | 01 |
| | | 6 | | | | | | | |
| | | 5 | | | | | | | |
| | | 4 | | | | | | | |
| | | 3 | CED/ANS transmission ATT (HEX) every 1 dBm (0 to -15dBm) | | | | | | |
| | | 2 | | | | | | | |
| | | 1 | | | | | | | |
| | | 0 | | | | | | | |
| 0e01a2 | CD/SED ON level | 7 | | Utility Mode Special Setting (0,1) | 0x03 | 0x03 | 0x03 | XB | 02 |
| | | 6 | | | | | | | |
| | | 5 | | | | | | | |
| | | 4 | | | | | | | |
| | | 3 | | | | | | | |
| | | 2 | | | | | | | |
| | | 1 | CD/SED ON level [dBm]<br>00: -33<br>01: -38<br>10: -43<br>11: -48 | | | | | | |
| | | 0 | | | | | | | |
| 0e01a3 | Cable equalizer | 7 | | Utility Mode Special Setting (4,5) | 0x00 | 0x00 | 0x00 | XB | 03 |
| | | 6 | | | | | | | |
| | | 5 | Cable EQL transmission selection | | | | | | |

| Address | Items | Bit No | Contents | Setting | Default | | | CSRC | |
|---|---|---|---|---|---|---|---|---|---|
| | | | | | Japan | North America | Europe | Command | Parameter |
| | | 4 | 00: OFF<br>01: Send only<br>10: Receive only<br>11: Send and receive | | | | | | |
| | | 3 | | | | | | | |
| | | 2 | | | | | | | |
| | | 1 | Cable EQL parameter selection<br>00: 1.8 km<br>01: 3.6km<br>10: 7.2km<br>11: NTT4 | | | | | | |
| | | 0 | | | | | | | |
| 0e01a4 | V34 Points | 7 | | Utility Mode Special Setting (4,5) | 0x00 | 0x00 | 0x00 | XB | 04 |
| | | 6 | | | | | | | |
| | | 5 | | | | | | | |
| | | 4 | | | | | | | |
| | | 3 | | | | | | | |
| | | 2 | | | | | | | |
| | | 1 | V34 Point<br>00: Auto<br>01: 16-point<br>10: 4-point | | | | | | |
| | | 0 | | | | | | | |
| 0e01a5 | TEL/FAX switching (For Japan models only)<br>*Use Line 1 only | 7 | Time from vocal response to RBT transmission (CNG detection waiting time 2)<br>0: 4 sec.<br>1: 2 sec. | Utility Mode Special Setting (4,5) | 0x00 | 0x00 | 0x00 | XB | 05 |
| | | 6 | Time from reception to voice response transmission (CNG detection waiting time 1)<br>0: 2 sec.<br>1: 4 sec. | | | | | | |
| | | 5 | TEL/FAX switching mode<br>0: Disabled<br>1: Enabled | | | | | | |
| | | 4 | External telephone no ringing setting<br>0: Disabled<br>1: Enabled (disconnected) | | | | | | |
| | | 3 | TEL/FAX switching ON response details<br>0: Voice response + RBT transmission<br>1: RBT transmission only | | | | | | |
| | | 2 | | | | | | | |
| | | 1 | | | | | | | |
| | | 0 | | | | | | | |
| 0e01a6 | Ring Back Tone parameter (For Japan models only)<br>*Use Line 1 only | 7 | RBT form<br>000: No<br>001: Japan<br>010: US<br>011: UK<br>100: Germany<br>101 to 111: Others | Utility Mode Special Setting (0-3,5-7) | 0x2a | 0x4a | 0x68 | XB | 06 |
| | | 6 | | | | | | | |
| | | 5 | | | | | | | |
| | | 4 | CED transmitted upon TEL/FAX switching | | | | | | |
| | | 3 | RBT transmission level (HEX)<br>0 to -15 dBm | | | | | | |
| | | 2 | | | | | | | |
| | | 1 | | | | | | | |
| | | 0 | | | | | | | |
| 0e01a7 | International com mode operation | 7 | DIS waiting frequency<br>0: Always once<br>1: Twice in overseas communication | Utility Mode Special Setting (6,7) | 0x40 | 0x40 | 0x40 | XB | 07 |

| Address | Items | Bit No | Contents | Setting | Default | | | CSRC | |
|---|---|---|---|---|---|---|---|---|---|
| | | | | | Japan | North America | Europe | Command | Parameter |
| | | 6 | Overseas communication<br>0: No<br>1: Yes | | | | | | |
| | | 5 | | | | | | | |
| | | 4 | | | | | | | |
| | | 3 | | | | | | | |
| | | 2 | | | | | | | |
| | | 1 | | | | | | | |
| | | 0 | | | | | | | |
| 0e01a8 | Starting speed in international mode (V29 modem) | 7 | | Utility Mode Special Setting (0,1,3,4) | 0x02 | 0x02 | 0x02 | XB | 08 |
| | | 6 | | | | | | | |
| | | 5 | | | | | | | |
| | | 4 | 9600 bps/V.29 | | | | | | |
| | | 3 | 7200 bps/V.29 | | | | | | |
| | | 2 | | | | | | | |
| | | 1 | 4800 bps/V.27 ter | | | | | | |
| | | 0 | 2400 bps/V.27 ter | | | | | | |
| 0e01a9 | Starting speed in international mode (V17 or V33 modem) | 7 | 14400 bps/V.17 | Utility Mode Special Setting (4-7) | 0x10 | 0x10 | 0x10 | XB | 09 |
| | | 6 | 12000 bps/V.17 | | | | | | |
| | | 5 | 9600 bps/V.17 | | | | | | |
| | | 4 | 7200 bps/V.17 | | | | | | |
| | | 3 | | | | | | | |
| | | 2 | | | | | | | |
| | | 1 | | | | | | | |
| | | 0 | | | | | | | |
| 0e01aa | Starting speed in international mode (V34) | 7 | 33600 bps/V.34 | Utility Mode Special Setting | 0x20 | 0x20 | 0x20 | XB | 0A |
| | | 6 | 31200 bps/V.34 | | | | | | |
| | | 5 | 28800 bps/V.34 | | | | | | |
| | | 4 | 26400 bps/V.34 | | | | | | |
| | | 3 | 24000 bps/V.34 | | | | | | |
| | | 2 | 21600 bps/V.34 | | | | | | |
| | | 1 | 19200 bps/V.34 | | | | | | |
| | | 0 | 16800 bps/V.34 | | | | | | |
| 0e01ab | CD OFF timer | 7 | CD OFF timer (Unit: 100 ms, HEX) | - | 0x14 | 0x14 | 0x14 | XB | 0B |
| | | 6 | | | | | | | |
| | | 5 | | | | | | | |
| | | 4 | | | | | | | |
| | | 3 | | | | | | | |
| | | 2 | | | | | | | |
| | | 1 | | | | | | | |
| | | 0 | | | | | | | |
| 0e01ac | CD ON integration time | 7 | CD ON integration time (Unit: 100 ms. HEX) | - | 0x06 | 0x06 | 0x06 | XB | 0C |
| | | 6 | | | | | | | |
| | | 5 | | | | | | | |
| | | 4 | | | | | | | |
| | | 3 | | | | | | | |
| | | 2 | | | | | | | |
| | | 1 | | | | | | | |
| | | 0 | | | | | | | |
| 0e01ad | Max. allowable symbol speed | 7 | V34 controll ch data rate<br>0: 1200<br>1: 2400 | Utility Mode Special Setting (0-3,7) | 0x05 | 0x05 | 0x05 | XB | 0D |
| | | 6 | | | | | | | |
| | | 5 | | | | | | | |
| | | 4 | | | | | | | |
| | | 3 | Max. allowable symbol speed<br>0000: 2400 | | | | | | |

| Address | Items | Bit No | Contents | Setting | Default | | | CSRC | |
|---|---|---|---|---|---|---|---|---|---|
| | | | | | Japan | North America | Europe | Command | Parameter |
| | | 2<br>1<br>0 | 0001: Reserved<br>0010: 2800<br>0011: 3000<br>0100: 3200<br>0101: 3429 | | | | | | |
| 0e01ae | V34 primary channel fallback | 7<br>6<br>5<br>4<br>3<br>2<br>1<br>0 | No. of frame errors subjected to fallback (HEX) | - | 0x03 | 0x03 | 0x03 | XB | 0E |

### 5.26.2 0e01b#

| Address | Items | Bit No | Contents | Setting | Default | | | CSRC | |
|---|---|---|---|---|---|---|---|---|---|
| | | | | | Japan | North America | Europe | Command | Parameter |
| 0e01b0 | V34 off Rx-V34 off time after error | 7<br>6<br>5<br>4<br>3<br>2<br>1<br>0 | Timer value after V34 reception error used to reset V34 off reception (min, HEX) (Valid only when transmission side cannot be specified) | - | 0x0a | 0x0a | 0x0a | XB | 10 |
| 0e01b1 | V34 off Rx-V17 OK Rx times to reset V34 off Rx | 7<br>6<br>5<br>4<br>3<br>2<br>1<br>0 | No. of continuous success of V17 receptions used to reset V34 off reception after V34 reception error (times, HEX) (Valid only when transmission side can be specified with Caller ID) | - | 0x0a | 0x0a | 0x0a | XB | 11 |
| 0e01b2 | (Inhibit of) V34 off Rx-Function ON/ OFF | 7<br>6<br>5<br>4<br>3<br>2 | | - | 0x00 | 0x02 | 0x02 | XB | 12 |
| | | 1 | V.34 OFF reset mode = No. of successful consecutive V.17 reception times (ID specified)<br>0: Enabled<br>1: Inhibit | | | | | | |
| | | 0 | V.34 OFF reset mode = time (ID cannot be specified)<br>0: Enabled<br>1: Disable | | | | | | |
| 0e01b3 | JBIG parameter | 7<br>6<br>5<br>4<br>3<br>2 | | - | 0x01 | 0x01 | 0x01 | XB | 13 |

| Address | Items | Bit No | Contents | Setting | Default | | | CSRC | |
|---|---|---|---|---|---|---|---|---|---|
| | | | | | Japan | North America | Europe | Command | Parameter |
| | | 1 | Use of following FP JBIG option LO size at reduction<br>0: No<br>1: Yes | | | | | | |
| | | 0 | JBIG optional L0 capacity<br>0: No<br>1: Yes | | | | | | |
| 0e01b4 | JBIG LO size | 7 | JBIG optional LO size used for reduction (HEX) (setting range: 0x01to0xffffffff)<br>[0] = HH, [1] = HL, [2] = LH, [3] = LL | - | 0x00<br>0x00<br>0x00<br>0x80 | 0x00<br>0x00<br>0x00<br>0x80 | 0x00<br>0x00<br>0x00<br>0x80 | XB | 14 |
| | | 6 | | | | | | | |
| | | 5 | | | | | | | |
| | | 4 | | | | | | | |
| | | 3 | | | | | | | |
| | | 2 | | | | | | | |
| | | 1 | | | | | | | |
| | | 0 | | | | | | | |
| 0e01b5 | (Inhibit of) JBIG off Rx-Function ON/ OFF | 7 | | - | 0x00 | 0x00 | 0x00 | XB | 18 |
| | | 6 | | | | | | | |
| | | 5 | | | | | | | |
| | | 4 | | | | | | | |
| | | 3 | | | | | | | |
| | | 2 | | | | | | | |
| | | 1 | JBIG off function at A3 high-definition reception (DIS retransmission)<br>0: OFF<br>1: ON | | | | | | |
| | | 0 | JBIG off function after JBIG reception error<br>0: Enable<br>1: Disable | | | | | | |
| 0e01b6 - 0e01b9 | JBIG off Rx-JBIG off time after error | 7 | Timer value after JBIG reception error to reset JBIG off reception (min, HEX) (10 min. if 0) | - | 0x0a | 0x0a | 0x0a | XB | 19 |
| | | 6 | | | | | | | |
| | | 5 | | | | | | | |
| | | 4 | | | | | | | |
| | | 3 | | | | | | | |
| | | 2 | | | | | | | |
| | | 1 | | | | | | | |
| | | 0 | | | | | | | |
| 0e01ba | PBX dial tone detection frequency pattern | 7 | | - | 0x08 | 0x00 | 0x00 | XB | 1A |
| | | 6 | Tone type<br>0: Single<br>1: Dual | | | | | | |
| | | 5 | | | | | | | |
| | | 4 | PBX dial tone detection frequency pattern<br>1: 155 ±65 Hz<br>2: 375 ±125 Hz<br>3: 400 ±90 Hz<br>4: 400 ±100 Hz<br>5: 420 ±90 Hz<br>6: 425 ±75 Hz<br>7: 425 ±95 Hz<br>8: 425 ±125 Hz<br>9: 430 ±90 Hz<br>10: 435 ±85 Hz<br>11: 440 ±90 Hz<br>12: 445 ±125 Hz<br>13: 450 ±50 Hz<br>14: 450 ±70 Hz<br>15: 450 ±100 Hz<br>16: 450 ±120 Hz<br>17: 460 ±140 Hz<br>18: 465 ±205 Hz<br>19: 475 ±175 Hz | | | | | | |
| | | 3 | | | | | | | |
| | | 2 | | | | | | | |
| | | 1 | | | | | | | |

| Address | Items | Bit No | Contents | Setting | Default | | | CSRC | |
|---|---|---|---|---|---|---|---|---|---|
| | | | | | Japan | North America | Europe | Command | Parameter |
| | | 0 | 20: 480 ±90 Hz<br>21: 480 ±190 Hz<br>22: 1155 ±25 Hz | | | | | | |
| 0e01bb | PBX dial tone detection time | 7 | PBX dial tone detection time or max. ON time value (unit: 20 ms, HEX) | - | 0x32 | 0x00 | 0x00 | XB | 1B |
| | | 6 | | | | | | | |
| | | 5 | | | | | | | |
| | | 4 | | | | | | | |
| | | 3 | | | | | | | |
| | | 2 | | | | | | | |
| | | 1 | | | | | | | |
| | | 0 | | | | | | | |
| 0e01bc | PBX dial tone ON time min. value | 7 | PBX dial tone ON time min. value (unit: 20ms, HEX) | - | 0x00 | 0x00 | 0x00 | XB | 1C |
| | | 6 | | | | | | | |
| | | 5 | | | | | | | |
| | | 4 | | | | | | | |
| | | 3 | | | | | | | |
| | | 2 | | | | | | | |
| | | 1 | | | | | | | |
| | | 0 | | | | | | | |
| 0e01bd | PBX dial tone OFF time max. value | 7 | PBX dial tone OFF time max. value (unit: 20 ms, HEX) | - | 0x00 | 0x00 | 0x00 | XB | 1D |
| | | 6 | | | | | | | |
| | | 5 | | | | | | | |
| | | 4 | | | | | | | |
| | | 3 | | | | | | | |
| | | 2 | | | | | | | |
| | | 1 | | | | | | | |
| | | 0 | | | | | | | |
| 0e01be | PBX dial tone OFF time min. value | 7 | PBX dial tone OFF time min. value (unit: 20 ms, HEX) | - | 0x00 | 0x00 | 0x00 | XB | 1E |
| | | 6 | | | | | | | |
| | | 5 | | | | | | | |
| | | 4 | | | | | | | |
| | | 3 | | | | | | | |
| | | 2 | | | | | | | |
| | | 1 | | | | | | | |
| | | 0 | | | | | | | |
| 0e01bf | PBX dial tone waiting time | 7 | PBX dial tone waiting time or pre-pause time (unit: 1 sec, HEX) | - | 0x03 | 0x03 | 0x03 | XB | 1F |
| | | 6 | | | | | | | |
| | | 5 | | | | | | | |
| | | 4 | | | | | | | |
| | | 3 | | | | | | | |
| | | 2 | | | | | | | |
| | | 1 | | | | | | | |
| | | 0 | | | | | | | |

### 5.26.3 0e01c#

| Address | Items | Bit No | Contents | Setting | Default | | | CSRC | |
|---|---|---|---|---|---|---|---|---|---|
| | | | | | Japan | North America | Europe | Command | Parameter |
| 0e01c0 | PBX dial tone instantaneous break detection time | 7 | Instantaneous shutdown time (unit: 20 ms, HEX) or tone detection frequency (times, HEX) | - | 0x00 | 0x00 | 0x00 | XB | 20 |
| | | 6 | | | | | | | |
| | | 5 | | | | | | | |
| | | 4 | | | | | | | |
| | | 3 | | | | | | | |
| | | 2 | | | | | | | |
| | | 1 | | | | | | | |

| Address | Items | Bit No | Contents | Setting | Default | | | CSRC | |
|---|---|---|---|---|---|---|---|---|---|
| | | | | | Japan | North America | Europe | Command | Parameter |
| | | 0 | | | | | | | |
| 0e01c1 | 1st dial tone detection frequency pattern | 7 | | - | 0x08 | 0x35 | 0x13 | XB | 21 |
| | | 6 | Tone type<br>0: Single<br>1: Dual | | | | | | |
| | | 5 | | | | | | | |
| | | 4 | 1st dial tone detection frequency pattern<br>1: 155 ±65 Hz<br>2: 375 ±125 Hz<br>3: 400 ±90 Hz<br>4: 400 ±100 Hz<br>5: 420 ±90 Hz<br>6: 425 ±75 Hz<br>7: 425 ±95 Hz<br>8: 425 ±125 Hz<br>9: 430 ±90 Hz<br>10: 435 ±85 Hz<br>11: 440 ±90 Hz<br>12: 445 ±125 Hz<br>13: 450 ±50 Hz<br>14: 450 ±70 Hz<br>15: 450 ±100 Hz<br>16: 450 ±120 Hz<br>17: 460 ±140 Hz<br>18: 465 ±205 Hz<br>19: 475 ±175 Hz<br>20: 480 ±90 Hz<br>21: 480 ±190 Hz<br>22: 1155 ±25 Hz | | | | | |
| | | 3 | | | | | | | |
| | | 2 | | | | | | | |
| | | 1 | | | | | | | |
| | | 0 | | | | | | | |
| 0e01c2 | 1st dial tone detection time | 7 | 1st dial tone detection time or ON time max. value (unit: 20 ms, HEX) | - | 0x32 | 0x32 | 0x1a | XB | 22 |
| | | 6 | | | | | | | |
| | | 5 | | | | | | | |
| | | 4 | | | | | | | |
| | | 3 | | | | | | | |
| | | 2 | | | | | | | |
| | | 1 | | | | | | | |
| | | 0 | | | | | | | |
| 0e01c3 | 1st dial tone ON time min. value | 7 | 1st dial tone ON time min. value (unit: 20 ms, HEX) | - | 0x00 | 0x00 | 0x00 | XB | 23 |
| | | 6 | | | | | | | |
| | | 5 | | | | | | | |
| | | 4 | | | | | | | |
| | | 3 | | | | | | | |
| | | 2 | | | | | | | |
| | | 1 | | | | | | | |
| | | 0 | | | | | | | |
| 0e01c4 | 1st dial tone OFF time max. value | 7 | 1st dial tone OFF time max. value (unit: 20 ms, HEX) | - | 0x00 | 0x00 | 0x00 | XB | 24 |
| | | 6 | | | | | | | |
| | | 5 | | | | | | | |
| | | 4 | | | | | | | |
| | | 3 | | | | | | | |
| | | 2 | | | | | | | |
| | | 1 | | | | | | | |
| | | 0 | | | | | | | |
| 0e01c5 | 1st dial tone OFF time min. value | 7 | 1st dial tone OFF time min. value (unit: 20 ms, HEX) | - | 0x00 | 0x00 | 0x00 | XB | 25 |
| | | 6 | | | | | | | |
| | | 5 | | | | | | | |
| | | 4 | | | | | | | |
| | | 3 | | | | | | | |
| | | 2 | | | | | | | |
| | | 1 | | | | | | | |

| Address | Items | Bit No | Contents | Setting | Default | | | CSRC | |
|---|---|---|---|---|---|---|---|---|---|
| | | | | | Japan | North America | Europe | Command | Parameter |
| | | 0 | | | | | | | |
| 0e01c6 | 1st dial tone waiting time | 7 | 1st dial tone waiting time or pre-pause time (unit: 1 sec, HEX) | - | 0x03 | 0x03 | 0x04 | XB | 26 |
| | | 6 | | | | | | | |
| | | 5 | | | | | | | |
| | | 4 | | | | | | | |
| | | 3 | | | | | | | |
| | | 2 | | | | | | | |
| | | 1 | | | | | | | |
| | | 0 | | | | | | | |
| 0e01c7 | 1st dial tone instantaneous break detection time | 7 | Instantaneous shutdown time (unit: 20 ms, HEX) or tone detection frequency (times, HEX) | - | 0x00 | 0x00 | 0x05 | XB | 27 |
| | | 6 | | | | | | | |
| | | 5 | | | | | | | |
| | | 4 | | | | | | | |
| | | 3 | | | | | | | |
| | | 2 | | | | | | | |
| | | 1 | | | | | | | |
| | | 0 | | | | | | | |
| 0e01c8 | 2nd dial tone detection pattern | 7 | | - | 0x08 | 0x00 | 0x00 | XB | 28 |
| | | 6 | Tone type<br>0: Single<br>1: Dual | | | | | | |
| | | 5 | | | | | | | |
| | | 4 | 2nd dial tone detection pattern<br>1: 155 ±65 Hz<br>2: 375 ±125 Hz<br>3: 400 ±90 Hz<br>4: 400 ±100 Hz<br>5: 420 ±90 Hz<br>6: 425 ±75 Hz<br>7: 425 ±95 Hz<br>8: 425 ±125 Hz<br>9: 430 ±90 Hz<br>10: 435 ±85 Hz<br>11: 440 ±90 Hz<br>12: 445 ±125 Hz<br>13: 450 ±50 Hz<br>14: 450 ±70 Hz<br>15: 450 ±100 Hz<br>16: 450 ±120 Hz<br>17: 460 ±140 Hz<br>18: 465 ±205 Hz<br>19: 475 ±175 Hz<br>20: 480 ±90 Hz<br>21: 480 ±190 Hz<br>22: 1155 ±25 Hz | | | | | |
| | | 3 | | | | | | | |
| | | 2 | | | | | | | |
| | | 1 | | | | | | | |
| | | 0 | | | | | | | |
| 0e01c9 | 2nd dial tone detection time | 7 | 2nd dial tone detection time or ON time max. value (unit: 20 ms, HEX) | - | 0x08 | 0x00 | 0x00 | XB | 29 |
| | | 6 | | | | | | | |
| | | 5 | | | | | | | |
| | | 4 | | | | | | | |
| | | 3 | | | | | | | |
| | | 2 | | | | | | | |
| | | 1 | | | | | | | |
| | | 0 | | | | | | | |
| 0e01ca | 2nd dial tone ON time min. value | 7 | 2nd dial tone ON time min. value (unit: 20 ms, HEX) | - | 0x02 | 0x00 | 0x00 | XB | 2A |
| | | 6 | | | | | | | |
| | | 5 | | | | | | | |
| | | 4 | | | | | | | |
| | | 3 | | | | | | | |
| | | 2 | | | | | | | |
| | | 1 | | | | | | | |
| | | 0 | | | | | | | |

| Address | Items | Bit No | Contents | Setting | Default | | | CSRC | |
|---|---|---|---|---|---|---|---|---|---|
| | | | | | Japan | North America | Europe | Command | Parameter |
| 0e01cb | 2nd dial tone OFF time max. value | 7 | 2nd dial tone OFF time max. value (unit: 20 ms, HEX) | - | 0x0a | 0x00 | 0x00 | XB | 2B |
| | | 6 | | | | | | | |
| | | 5 | | | | | | | |
| | | 4 | | | | | | | |
| | | 3 | | | | | | | |
| | | 2 | | | | | | | |
| | | 1 | | | | | | | |
| | | 0 | | | | | | | |
| 0e01cc | 2nd dial tone OFF time min. value | 7 | 2nd dial tone OFF time min. value (unit: 20 ms, HEX) | - | 0x04 | 0x00 | 0x00 | XB | 2C |
| | | 6 | | | | | | | |
| | | 5 | | | | | | | |
| | | 4 | | | | | | | |
| | | 3 | | | | | | | |
| | | 2 | | | | | | | |
| | | 1 | | | | | | | |
| | | 0 | | | | | | | |
| 0e01cd | 2nd dial tone waiting time | 7 | 2nd dial tone waiting time or pre-pause time (unit: 1 sec, HEX) | - | 0x03 | 0x03 | 0x03 | XB | 2D |
| | | 6 | | | | | | | |
| | | 5 | | | | | | | |
| | | 4 | | | | | | | |
| | | 3 | | | | | | | |
| | | 2 | | | | | | | |
| | | 1 | | | | | | | |
| | | 0 | | | | | | | |
| 0e01ce | 2nd dial tone instantaneous break detection time | 7 | Instantaneous shutdown detection time (unit: 20 ms, HEX) or tone detection frequency (times, HEX) | - | 0x03 | 0x00 | 0x00 | XB | 2E |
| | | 6 | | | | | | | |
| | | 5 | | | | | | | |
| | | 4 | | | | | | | |
| | | 3 | | | | | | | |
| | | 2 | | | | | | | |
| | | 1 | | | | | | | |
| | | 0 | | | | | | | |
| 0e01cf | 3rd dial tone detection pattern | 7 | | - | 0x00 | 0x00 | 0x00 | XB | 2F |
| | | 6 | Tone type<br>0: Single<br>1: Dual | | | | | | |
| | | 5 | | | | | | | |
| | | 4 | 3 RD dial tone detection pattern<br>1: 155 ±65 Hz<br>2: 375 ±125 Hz<br>3: 400 ±90 Hz<br>4: 400 ±100 Hz<br>5: 420 ±90 Hz<br>6: 425 ±75 Hz<br>7: 425 ±95 Hz<br>8: 425 ±125 Hz<br>9: 430 ±90 Hz<br>10: 435 ±85 Hz<br>11: 440 ±90 Hz<br>12: 445 ±125 Hz<br>13: 450 ±50 Hz<br>14: 450 ±70 Hz<br>15: 450 ±100 Hz<br>16: 450 ±120 Hz<br>17: 460 ±140 Hz<br>18: 465 ±205 Hz<br>19: 475 ±175 Hz<br>20: 480 ±90 Hz<br>21: 480 ±190 Hz<br>22: 1155 ±25 Hz | | | | | |
| | | 3 | | | | | | | |
| | | 2 | | | | | | | |
| | | 1 | | | | | | | |
| | | 0 | | | | | | | |

### 5.26.4 0e01d#

| Address | Items | Bit No | Contents | Setting | Default | | | CSRC | |
|---|---|---|---|---|---|---|---|---|---|
| | | | | | Japan | North America | Europe | Command | Parameter |
| 0e01d0 | Busy dial tone detection pattern | 7 | | - | 0x08 | 0x55 | 0x09 | XB | 30 |
| | | 6 | Tone type<br>0: Single<br>1: Dual | | | | | | |
| | | 5 | | | | | | | |
| | | 4 | Busy dial tone detection pattern<br>1: 155 ±65 Hz<br>2: 375 ±125 Hz<br>3: 400 ±90 Hz<br>4: 400 ±100 Hz<br>5: 420 ±90 Hz<br>6: 425 ±75 Hz<br>7: 425 ±95 Hz<br>8: 425 ±125 Hz<br>9: 430 ±90 Hz<br>10: 435 ±85 Hz<br>11: 440 ±90 Hz<br>12: 445 ±125 Hz<br>13: 450 ±50 Hz<br>14: 450 ±70 Hz<br>15: 450 ±100 Hz<br>16: 450 ±120 Hz<br>17: 460 ±140 Hz<br>18: 465 ±205 Hz<br>19: 475 ±175 Hz<br>20: 480 ±90 Hz<br>21: 480 ±190 Hz<br>22: 1155 ±25 Hz | | | | | |
| | | 3 | | | | | | | |
| | | 2 | | | | | | | |
| | | 1 | | | | | | | |
| | | 0 | | | | | | | |
| 0e01d1 | Busy tone ON time max. value | 7 | Busy tone ON time max. value (unit: 20 ms, HEX) | - | 0x1e | 0x1e | 0x00 | XB | 31 |
| | | 6 | | | | | | | |
| | | 5 | | | | | | | |
| | | 4 | | | | | | | |
| | | 3 | | | | | | | |
| | | 2 | | | | | | | |
| | | 1 | | | | | | | |
| | | 0 | | | | | | | |
| 0e01d2 | Busy tone ON time min. value | 7 | Busy tone ON time min. value (unit: 20 ms, HEX) | - | 0x14 | 0x14 | 0x00 | XB | 32 |
| | | 6 | | | | | | | |
| | | 5 | | | | | | | |
| | | 4 | | | | | | | |
| | | 3 | | | | | | | |
| | | 2 | | | | | | | |
| | | 1 | | | | | | | |
| | | 0 | | | | | | | |
| 0e01d3 | Busy tone OFF time max. value | 7 | Busy tone OFF time max. value (unit: 20 ms, HEX) | - | 0x1e | 0x1e | 0x00 | XB | 33 |
| | | 6 | | | | | | | |
| | | 5 | | | | | | | |
| | | 4 | | | | | | | |
| | | 3 | | | | | | | |
| | | 2 | | | | | | | |
| | | 1 | | | | | | | |
| | | 0 | | | | | | | |
| 0e01d4 | Busy tone OFF time min. value | 7 | Busy tone OFF time min. value (unit: 20 ms, HEX) | - | 0x14 | 0x14 | 0x00 | XB | 34 |
| | | 6 | | | | | | | |
| | | 5 | | | | | | | |
| | | 4 | | | | | | | |
| | | 3 | | | | | | | |
| | | 2 | | | | | | | |
| | | 1 | | | | | | | |
| | | 0 | | | | | | | |

| Address | Items | Bit No | Contents | Setting | Default | | | CSRC | |
|---|---|---|---|---|---|---|---|---|---|
| | | | | | Japan | North America | Europe | Command | Parameter |
| 0e01d5 | Ringer detection pattern | 7 | Custom mode<br>0: OFF (in accordance with bits 3-0)<br>1: ON (in accordance with bits 5-4) | - | 0x00 | 0x00 | 0x00 | XB | 35 |
| | | 6 | | | | | | | |
| | | 5 | Custom mode ringer detection pattern<br>00: Single<br>01: Double<br>10: Triple<br>*The standard time is configured with DRPD_Custom[].<br>Configure commonly with DRPD_1st[] through 3rd[] to adjust the detection time. | | | | | | |
| | | 4 | | | | | | | |
| | | 3 | Ringer detection pattern<br>0000: Nomal<br>0001: DRPD_Single<br>0010: DRPD_Double<br>0011: DRPD_Triple1<br>0100: DRPD_Triple2<br>0101: DRPD_NZDA1<br>0110: DRPD_NZDA2<br>0111: DRPD_NZDA3<br>1000: DRPD_NZDA4<br>1001: DRPD_Duet<br>*Normal conforms to Ringer[2] through [5] as usual.<br>*For DRPD, configure the margin time (min, max) from the standard time*1. | | | | | | |
| | | 2 | | | | | | | |
| | | 1 | | | | | | | |
| | | 0 | | | | | | | |
| 0e01d6 | Ringer detection frequency upper limits | 7 | Ringer detection frequency upper limit (unit: 1 Hz, HEX) | - | 0x46 | 0x46 | 0x46 | XB | 36 |
| | | 6 | | | | | | | |
| | | 5 | | | | | | | |
| | | 4 | | | | | | | |
| | | 3 | | | | | | | |
| | | 2 | | | | | | | |
| | | 1 | | | | | | | |
| | | 0 | | | | | | | |
| 0e01d7 | Ringer detection frequency lower limits | 7 | Ringer detection frequency lower limit (unit: 1 Hz, HEX) | - | 0x0c | 0x0c | 0x0c | XB | 37 |
| | | 6 | | | | | | | |
| | | 5 | | | | | | | |
| | | 4 | | | | | | | |
| | | 3 | | | | | | | |
| | | 2 | | | | | | | |
| | | 1 | | | | | | | |
| | | 0 | | | | | | | |
| 0e01d8 | Ringer ON time max. value | 7 | Ringer ON time max. value (unit: 20 ms, HEX) | - | 0x00 | 0x00 | 0x00 | XB | 38 |
| | | 6 | | | | | | | |
| | | 5 | | | | | | | |
| | | 4 | | | | | | | |
| | | 3 | | | | | | | |
| | | 2 | | | | | | | |
| | | 1 | | | | | | | |
| | | 0 | | | | | | | |
| 0e01d9 | Ringer ON time min. value | 7 | Ringer ON time min. value (unit: 20 ms, HEX) | - | 0x0a | 0x0a | 0x08 | XB | 39 |
| | | 6 | | | | | | | |
| | | 5 | | | | | | | |
| | | 4 | | | | | | | |
| | | 3 | | | | | | | |
| | | 2 | | | | | | | |

| Address | Items | Bit No | Contents | Setting | Default | | | CSRC | |
|---|---|---|---|---|---|---|---|---|---|
| | | | | | Japan | North America | Europe | Command | Parameter |
| | | 1 | | | | | | | |
| | | 0 | | | | | | | |
| 0e01da | Ringer OFF time max. value | 7 | Ringer OFF time max. value (unit: 100 ms, HEX) | - | 0x3c | 0x3c | 0x46 | XB | 3A |
| | | 6 | | | | | | | |
| | | 5 | | | | | | | |
| | | 4 | | | | | | | |
| | | 3 | | | | | | | |
| | | 2 | | | | | | | |
| | | 1 | | | | | | | |
| | | 0 | | | | | | | |
| 0e01db | Ringer OFF time min. value | 7 | Ringer OFF time min. value (unit: 100 ms, HEX) | Utility Mode Special Setting | 0x02 | 0x00 | 0x00 | XB | 3B |
| | | 6 | | | | | | | |
| | | 5 | | | | | | | |
| | | 4 | | | | | | | |
| | | 3 | | | | | | | |
| | | 2 | | | | | | | |
| | | 1 | | | | | | | |
| | | 0 | | | | | | | |
| 0e01dc | DRPD Ringer ON time max. value | 7 | DRPD Ringer ON time max. value (unit: 20 ms, HEX) | - | 0x09 | 0x09 | 0x09 | XB | 3C |
| | | 6 | | | | | | | |
| | | 5 | | | | | | | |
| | | 4 | | | | | | | |
| | | 3 | | | | | | | |
| | | 2 | | | | | | | |
| | | 1 | | | | | | | |
| | | 0 | | | | | | | |
| 0e01dd | DRPD ringer ON time min. value | 7 | DRPD ringer ON time min. value (in 20-ms increments, HEX) | - | 0x09 | 0x09 | 0x09 | XB | 3D |
| | | 6 | | | | | | | |
| | | 5 | | | | | | | |
| | | 4 | | | | | | | |
| | | 3 | | | | | | | |
| | | 2 | | | | | | | |
| | | 1 | | | | | | | |
| | | 0 | | | | | | | |
| 0e01de | DRPD ringer OFF time max. value | 7 | DRPD ringer OFF time max. value (in 20-ms increments, HEX) | - | 0x09 | 0x09 | 0x09 | XB | 3E |
| | | 6 | | | | | | | |
| | | 5 | | | | | | | |
| | | 4 | | | | | | | |
| | | 3 | | | | | | | |
| | | 2 | | | | | | | |
| | | 1 | | | | | | | |
| | | 0 | | | | | | | |
| 0e01df | DRPD ringer OFF time min. value | 7 | DRPD ringer OFF time min. value (in 20-ms increments, HEX) | - | 0x09 | 0x09 | 0x09 | XB | 3F |
| | | 6 | | | | | | | |
| | | 5 | | | | | | | |
| | | 4 | | | | | | | |
| | | 3 | | | | | | | |
| | | 2 | | | | | | | |
| | | 1 | | | | | | | |
| | | 0 | | | | | | | |

- *1: DRPD standard time

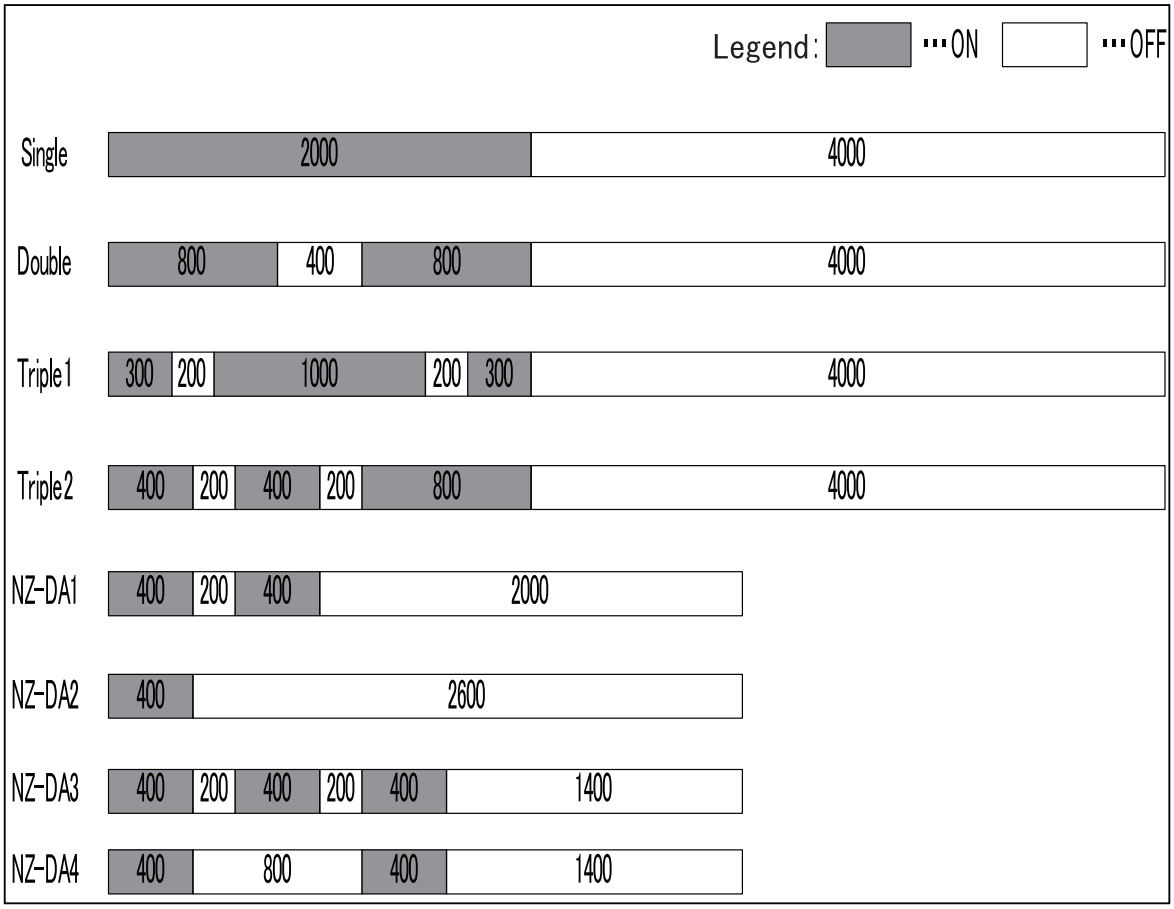


### 5.26.5 0e01e#

| Address | Items | Bit No | Contents | Setting | Default | | | CSRC | |
|---|---|---|---|---|---|---|---|---|---|
| | | | | | Japan | North America | Europe | Command | Parameter |
| 0e01e0 | DRPD max. adjustment value for max. OFF time | 7 | DRPD max. adjustment value for max. OFF time (100-ms increments, HEX) | - | 0x05 | 0x05 | 0x05 | XB | 40 |
| | | 6 | | | | | | | |
| | | 5 | | | | | | | |
| | | 4 | | | | | | | |
| | | 3 | | | | | | | |
| | | 2 | | | | | | | |
| | | 1 | | | | | | | |
| | | 0 | | | | | | | |
| 0e01e1 | DRPD min. adjustment value for max. OFF time | 7 | DRPD ringer min. adjustment value for max. OFF time (100-ms increments, HEX) | - | 0x05 | 0x05 | 0x05 | XB | 41 |
| | | 6 | | | | | | | |
| | | 5 | | | | | | | |
| | | 4 | | | | | | | |
| | | 3 | | | | | | | |
| | | 2 | | | | | | | |
| | | 1 | | | | | | | |
| | | 0 | | | | | | | |
| 0e01e2 | DRPD single ring stop detection time | 7 | DRPD single ring stop detection time (100-ms increments, HEX) | - | 0x50 | 0x50 | 0x50 | XB | 42 |
| | | 6 | | | | | | | |
| | | 5 | | | | | | | |
| | | 4 | | | | | | | |
| | | 3 | | | | | | | |
| | | 2 | | | | | | | |
| | | 1 | | | | | | | |
| | | 0 | | | | | | | |
| 0e01e3 | DRPD double ring stop detection time | 7 | DRPD double ring stop detection time (100-ms increments, HEX) | - | 0x50 | 0x50 | 0x50 | XB | 43 |
| | | 6 | | | | | | | |
| | | 5 | | | | | | | |

| Address | Items | Bit No | Contents | Setting | Default | | | CSRC | |
|---|---|---|---|---|---|---|---|---|---|
| | | | | | Japan | North America | Europe | Command | Parameter |
| | | 4 | | | | | | | |
| | | 3 | | | | | | | |
| | | 2 | | | | | | | |
| | | 1 | | | | | | | |
| | | 0 | | | | | | | |
| 0e01e4 | DRPD Triple1 ring stop detection time | 7 | DRPD Triple1 ring stop detection time (100-ms increments, HEX) | - | 0x50 | 0x50 | 0x50 | XB | 44 |
| | | 6 | | | | | | | |
| | | 5 | | | | | | | |
| | | 4 | | | | | | | |
| | | 3 | | | | | | | |
| | | 2 | | | | | | | |
| | | 1 | | | | | | | |
| | | 0 | | | | | | | |
| 0e01e5 | DRPD Triple2 ring stop detection time | 7 | DRPD Triple2 ring stop detection time (100-ms increments, HEX) | - | 0x50 | 0x50 | 0x50 | XB | 45 |
| | | 6 | | | | | | | |
| | | 5 | | | | | | | |
| | | 4 | | | | | | | |
| | | 3 | | | | | | | |
| | | 2 | | | | | | | |
| | | 1 | | | | | | | |
| | | 0 | | | | | | | |
| 0e01e6 | DRPD NZ-DA1 ring stop detection time | 7 | DRPD NZ-DA1 ring stop detection time (100-ms increments, HEX) | - | 0x3C | 0x3C | 0x3C | XB | 46 |
| | | 6 | | | | | | | |
| | | 5 | | | | | | | |
| | | 4 | | | | | | | |
| | | 3 | | | | | | | |
| | | 2 | | | | | | | |
| | | 1 | | | | | | | |
| | | 0 | | | | | | | |
| 0e01e7 | DRPD NZ-DA2 ring stop detection time | 7 | DRPD NZ-DA2 ring stop detection time (100-ms increments, HEX) | - | 0x3C | 0x3C | 0x3C | XB | 47 |
| | | 6 | | | | | | | |
| | | 5 | | | | | | | |
| | | 4 | | | | | | | |
| | | 3 | | | | | | | |
| | | 2 | | | | | | | |
| | | 1 | | | | | | | |
| | | 0 | | | | | | | |
| 0e01e8 | DRPD NZ-DA3 ring stop detection time | 7 | DRPD NZ-DA3 ring stop detection time (100-ms increments, HEX) | - | 0x32 | 0x32 | 0x32 | XB | 48 |
| | | 6 | | | | | | | |
| | | 5 | | | | | | | |
| | | 4 | | | | | | | |
| | | 3 | | | | | | | |
| | | 2 | | | | | | | |
| | | 1 | | | | | | | |
| | | 0 | | | | | | | |
| 0e01e9 | DRPD NZ-DA4 ring stop detection time | 7 | DRPD NZ-DA4 ring stop detection time (100-ms increments, HEX) | - | 0x32 | 0x32 | 0x32 | XB | 49 |
| | | 6 | | | | | | | |
| | | 5 | | | | | | | |
| | | 4 | | | | | | | |
| | | 3 | | | | | | | |
| | | 2 | | | | | | | |
| | | 1 | | | | | | | |
| | | 0 | | | | | | | |
| 0e01ea | Custom 1s ringer ON time specified value | 7 | Custom 1st ringer ON time specified value (100-ms increments, HEX) | - | 0x00 | 0x00 | 0x00 | XB | 4A |
| | | 6 | | | | | | | |

| Address | Items | Bit No | Contents | Setting | Default | | | CSRC | |
|---|---|---|---|---|---|---|---|---|---|
| | | | | | Japan | North America | Europe | Command | Parameter |
| | | 5 | | | | | | | |
| | | 4 | | | | | | | |
| | | 3 | | | | | | | |
| | | 2 | | | | | | | |
| | | 1 | | | | | | | |
| | | 0 | | | | | | | |
| 0e01eb | Custom 1st ringer OFF time specified value | 7 | Custom 1st ringer OFF time specified value (100-ms increments, HEX) | - | 0x00 | 0x00 | 0x00 | XB | 4B |
| | | 6 | | | | | | | |
| | | 5 | | | | | | | |
| | | 4 | | | | | | | |
| | | 3 | | | | | | | |
| | | 2 | | | | | | | |
| | | 1 | | | | | | | |
| | | 0 | | | | | | | |
| 0e01ec | Custom 2nd ringer ON time specified value | 7 | Custom 2nd ringer ON time specified value (100-ms increments, HEX) | - | 0x00 | 0x00 | 0x00 | XB | 4C |
| | | 6 | | | | | | | |
| | | 5 | | | | | | | |
| | | 4 | | | | | | | |
| | | 3 | | | | | | | |
| | | 2 | | | | | | | |
| | | 1 | | | | | | | |
| | | 0 | | | | | | | |
| 0e01ed | Custom 2nd ringer OFF time specified value | 7 | Custom 2nd ringer OFF time specified value (100-ms increments, HEX) | - | 0x00 | 0x00 | 0x00 | XB | 4D |
| | | 6 | | | | | | | |
| | | 5 | | | | | | | |
| | | 4 | | | | | | | |
| | | 3 | | | | | | | |
| | | 2 | | | | | | | |
| | | 1 | | | | | | | |
| | | 0 | | | | | | | |
| 0e01ee | Custom 3rd ringer ON time specified value | 7 | Custom 3rd ringer ON time specified value (100-ms increments, HEX) | - | 0x00 | 0x00 | 0x00 | XB | 4E |
| | | 6 | | | | | | | |
| | | 5 | | | | | | | |
| | | 4 | | | | | | | |
| | | 3 | | | | | | | |
| | | 2 | | | | | | | |
| | | 1 | | | | | | | |
| | | 0 | | | | | | | |
| 0e01ef | Custom 3rd ringer OFF time specified value | 7 | Custom 3rd ringer OFF time specified value (100-ms increments, HEX) | - | 0x00 | 0x00 | 0x00 | XB | 4F |
| | | 6 | | | | | | | |
| | | 5 | | | | | | | |
| | | 4 | | | | | | | |
| | | 3 | | | | | | | |
| | | 2 | | | | | | | |
| | | 1 | | | | | | | |
| | | 0 | | | | | | | |

### 5.26.6 0e01f#

| Address | Items | Bit No | Contents | Setting | Default | | | CSRC | |
|---|---|---|---|---|---|---|---|---|---|
| | | | | | Japan | North America | Europe | Command | Parameter |
| 0e01f0 | Custom Ring OFF detection time | 7 | Custom Ring OFF detection time (in 100-ms increments, HEX) | - | 0x00 | 0x00 | 0x00 | XB | 50 |
| | | 6 | | | | | | | |
| | | 5 | | | | | | | |
| | | 4 | | | | | | | |

| Address | Items | Bit No | Contents | Setting | Default | | | CSRC | |
|---|---|---|---|---|---|---|---|---|---|
| | | | | | Japan | North America | Europe | Command | Parameter |
| | | 3 | | | | | | | |
| | | 2 | | | | | | | |
| | | 1 | | | | | | | |
| | | 0 | | | | | | | |
| 0e01f1 | PB dial signal transmission time | 7 | PB dial signal transmission time (unit: 5 ms, HEX) | - | 0x15 | 0x19 | 0x15 | XB | 51 |
| | | 6 | | | | | | | |
| | | 5 | | | | | | | |
| | | 4 | | | | | | | |
| | | 3 | | | | | | | |
| | | 2 | | | | | | | |
| | | 1 | | | | | | | |
| | | 0 | | | | | | | |
| 0e01f2 | PB dial inter-digit pause | 7 | PB dial inter digit pause time (unit: 5 ms, HEX) | - | 0x11 | 0x15 | 0x11 | XB | 52 |
| | | 6 | | | | | | | |
| | | 5 | | | | | | | |
| | | 4 | | | | | | | |
| | | 3 | | | | | | | |
| | | 2 | | | | | | | |
| | | 1 | | | | | | | |
| | | 0 | | | | | | | |
| 0e01f3 | 10 pps pulse dial time | 7 | 10 pps pulse dial time | - | 0x0F | 0x12 | 0x12 | XB | 53 |
| | | 6 | | | | | | | |
| | | 5 | | | | | | | |
| | | 4 | | | | | | | |
| | | 3 | | | | | | | |
| | | 2 | | | | | | | |
| | | 1 | | | | | | | |
| | | 0 | | | | | | | |
| 0e01f4 | 10 pps pulse dial break time | 7 | 10 pps pulse dial break time | - | 0x1F | 0x1C | 0x1C | XB | 54 |
| | | 6 | | | | | | | |
| | | 5 | | | | | | | |
| | | 4 | | | | | | | |
| | | 3 | | | | | | | |
| | | 2 | | | | | | | |
| | | 1 | | | | | | | |
| | | 0 | | | | | | | |
| 0e01f5 | 10 pps pulse dial inter-digit pause | 7 | 10 pps pulse dial inter digit pause (unit: 10 ms, HEX) | - | 0x68 | 0x68 | 0x5e | XB | 55 |
| | | 6 | | | | | | | |
| | | 5 | | | | | | | |
| | | 4 | | | | | | | |
| | | 3 | | | | | | | |
| | | 2 | | | | | | | |
| | | 1 | | | | | | | |
| | | 0 | | | | | | | |
| 0e01f6 | 20 pps pulse dial time | 7 | 20 pps pulse dial time | - | 0x07 | 0x09 | 0x09 | XB | 56 |
| | | 6 | | | | | | | |
| | | 5 | | | | | | | |
| | | 4 | | | | | | | |
| | | 3 | | | | | | | |
| | | 2 | | | | | | | |
| | | 1 | | | | | | | |
| | | 0 | | | | | | | |
| 0e01f7 | 20 pps pulse dial break time | 7 | 20 pps pulse dial break time | - | 0x10 | 0x0E | 0x0E | XB | 57 |
| | | 6 | | | | | | | |
| | | 5 | | | | | | | |

| Address | Items | Bit No | Contents | Setting | Default | | | CSRC | |
|---|---|---|---|---|---|---|---|---|---|
| | | | | | Japan | North America | Europe | Command | Parameter |
| | | 4 | | | | | | | |
| | | 3 | | | | | | | |
| | | 2 | | | | | | | |
| | | 1 | | | | | | | |
| | | 0 | | | | | | | |
| 0e01f8 | 20 pps pulse dial inter-digit pause | 7 | 20 pps pulse dial inter digit pause (unit: 10 ms, HEX) | - | 0x59 | 0x40 | 0x5c | XB | 58 |
| | | 6 | | | | | | | |
| | | 5 | | | | | | | |
| | | 4 | | | | | | | |
| | | 3 | | | | | | | |
| | | 2 | | | | | | | |
| | | 1 | | | | | | | |
| | | 0 | | | | | | | |
| 0e01f9 | PB signal transmission level | 7 | PB signal transmission level (unit: 1 dBm, HEX) | Utility Mode Special Setting | 0x0a | 0x0a | 0x06 | XB | 59 |
| | | 6 | | | | | | | |
| | | 5 | | | | | | | |
| | | 4 | | | | | | | |
| | | 3 | | | | | | | |
| | | 2 | | | | | | | |
| | | 1 | | | | | | | |
| | | 0 | | | | | | | |
| 0e01fa | PB signal level difference (HL) | 7 | PB signal level difference (HL) (unit: 0.5 dBm, HEX) | Utility Mode Special Setting | 0x04 | 0x04 | 0x04 | XB | 5A |
| | | 6 | | | | | | | |
| | | 5 | | | | | | | |
| | | 4 | | | | | | | |
| | | 3 | | | | | | | |
| | | 2 | | | | | | | |
| | | 1 | | | | | | | |
| | | 0 | | | | | | | |
| 0e01fb | DCLOOP integration time at CML OFF | 7 | DCLOOP integration time at CML relay OFF (unit: 5 ms, HEX) (Lower limit 20 ms) | - | 0x50 | 0x50 | 0x50 | XB | 5B |
| | | 6 | | | | | | | |
| | | 5 | | | | | | | |
| | | 4 | | | | | | | |
| | | 3 | | | | | | | |
| | | 2 | | | | | | | |
| | | 1 | | | | | | | |
| | | 0 | | | | | | | |
| 0e01fc | DCLOOP integration time at CML ON | 7 | DCLOOP integration time at CML relay ON (unit: 5 ms, HEX) (Lower limit 20 ms) | - | 0x10 | 0x10 | 0x10 | XB | 5C |
| | | 6 | | | | | | | |
| | | 5 | | | | | | | |
| | | 4 | | | | | | | |
| | | 3 | | | | | | | |
| | | 2 | | | | | | | |
| | | 1 | | | | | | | |
| | | 0 | | | | | | | |
| 0e01fd | Pause time | 7 | | Utility Mode Special Setting (0-2) | 0x01 | 0x01 | 0x01 | XB | 5D |
| | | 6 | | | | | | | |
| | | 5 | | | | | | | |
| | | 4 | | | | | | | |
| | | 3 | | | | | | | |
| | | 2 | Pause time (unit:sec, HEX) | | | | | | |
| | | 1 | | | | | | | |
| | | 0 | | | | | | | |
| 0e01fe | DC-LOOP check mode | 7 | DC-LOOP check<br>0: No<br>1: Always | Utility Mode Special Setting (6,7) | 0x00 | 0x00 | 0x00 | XB | 5E |

| Address | Items | Bit No | Contents | Setting | Default | | | CSRC | |
|---|---|---|---|---|---|---|---|---|---|
| | | | | | Japan | North America | Europe | Command | Parameter |
| | | 6 | | | | | | | |
| | | 5 | | | | | | | |
| | | 4 | | | | | | | |
| | | 3 | | | | | | | |
| | | 2 | | | | | | | |
| | | 1 | | | | | | | |
| | | 0 | | | | | | | |
| 0e01ff | DC-LOOP waiting time | 7 | DC-LOOP waiting time (unit: 100 ms, HEX) | - | 0x00 | 0x00 | 0x00 | XB | 5F |
| | | 6 | | | | | | | |
| | | 5 | | | | | | | |
| | | 4 | | | | | | | |
| | | 3 | | | | | | | |
| | | 2 | | | | | | | |
| | | 1 | | | | | | | |
| | | 0 | | | | | | | |

### 5.26.7 0e020#

| Address | Items | Bit No | Contents | Setting | Default | | | CSRC | |
|---|---|---|---|---|---|---|---|---|---|
| | | | | | Japan | North America | Europe | Command | Parameter |
| 0e0200 | DC-LOOP instantaneous break allowable time (ph.A) | 7 | DC-LOOP instantaneous break allowable time (unit: 10 ms, HEX) (at the time of calling, CML ON to end of dialing) | - | 0x00 | 0x00 | 0x00 | XB | 60 |
| | | 6 | | | | | | | |
| | | 5 | | | | | | | |
| | | 4 | | | | | | | |
| | | 3 | | | | | | | |
| | | 2 | | | | | | | |
| | | 1 | | | | | | | |
| | | 0 | | | | | | | |
| 0e0201 | DC-LOOP instantaneous break allowable time (ph.B) | 7 | DC-LOOP instantaneous break allowable time (unit: 10ms, HEX) (after completion of dialing and after CML ON at the time of reception) | - | 0x00 | 0x00 | 0x00 | XB | 61 |
| | | 6 | | | | | | | |
| | | 5 | | | | | | | |
| | | 4 | | | | | | | |
| | | 3 | | | | | | | |
| | | 2 | | | | | | | |
| | | 1 | | | | | | | |
| | | 0 | | | | | | | |
| 0e0202 | Dial Mode RING DET mode | 7 | | Utility Mode (0,1) Utility Mode Special Setting (4,5) | 0x12 | 0x10 | 0x10 | XB | 62 |
| | | 6 | | | | | | | |
| | | 5 | RING detection mode 01: No. of times 10: Time | | | | | | |
| | | 4 | | | | | | | |
| | | 3 | Pulse format 00: General 01: SW 10: NO | | | | | | |
| | | 2 | | | | | | | |
| | | 1 | Dialing method 00: PB 01: 10pps 10: 20pps 11: 16pps | | | | | | |
| | | 0 | | | | | | | |
| 0e0203 | 1st/2nd DT detection parameter | 7 | | - | 0x00 | 0x00 | 0x00 | XB | 63 |
| | | 6 | | | | | | | |
| | | 5 | | | | | | | |
| | | 4 | | | | | | | |
| | | 3 | At 2nd DT detection DP dialing only | | | | | | |
| | | 2 | | | | | | | |

| Address | Items | Bit No | Contents | Setting | Default | | | CSRC | |
|---|---|---|---|---|---|---|---|---|---|
| | | | | | Japan | North America | Europe | Command | Parameter |
| | | 1 | | | | | | | |
| | | 0 | 1st DT2 type | | | | | | |
| 0e0204 | Tone detection | 7 | | Utility Mode Special Setting (4,5) | 0x11 | 0x11 | 0x01 | XB | 64 |
| | | 6 | | | | | | | |
| | | 5 | 1300 Hz<br>0: No<br>1: Yes | | | | | | |
| | | 4 | Busy Tone<br>0: No<br>1: Yes | | | | | | |
| | | 3 | PBX DT<br>0: No<br>1: Yes | | | | | | |
| | | 2 | 3rd DT<br>0: No<br>1: Yes | | | | | | |
| | | 1 | 2nd DT<br>0: No<br>1: Yes | | | | | | |
| | | 0 | 1st DT<br>0: No<br>1: Yes | | | | | | |
| 0e0205 | No. of busy tone detection times | 7 | No. of busy tone detection times (HEX) | Utility Mode Special Setting | 0x02 | 0x02 | 0x00 | XB | 65 |
| | | 6 | | | | | | | |
| | | 5 | | | | | | | |
| | | 4 | | | | | | | |
| | | 3 | | | | | | | |
| | | 2 | | | | | | | |
| | | 1 | | | | | | | |
| | | 0 | | | | | | | |
| 0e0206 | No. of RING detection times | 7 | No. of RING detection times (times, HEX) | Utility Mode | 0x02 | 0x02 | 0x02 | XB | 66 |
| | | 6 | | | | | | | |
| | | 5 | | | | | | | |
| | | 4 | | | | | | | |
| | | 3 | | | | | | | |
| | | 2 | | | | | | | |
| | | 1 | | | | | | | |
| | | 0 | | | | | | | |
| 0e0207 | RING detection time | 7 | Ring detection time (sec, HEX) | Utility Mode Special Setting | 0x06 | 0x06 | 0x06 | XB | 67 |
| | | 6 | | | | | | | |
| | | 5 | | | | | | | |
| | | 4 | | | | | | | |
| | | 3 | | | | | | | |
| | | 2 | | | | | | | |
| | | 1 | | | | | | | |
| | | 0 | | | | | | | |
| 0e0208 | Remote station response waiting time | 7 | Remote station response waiting time at calling (unit:sec, HEX) | Utility Mode Special Setting | 0x37 | 0x37 | 0x37 | XB | 68 |
| | | 6 | | | | | | | |
| | | 5 | | | | | | | |
| | | 4 | | | | | | | |
| | | 3 | | | | | | | |
| | | 2 | | | | | | | |
| | | 1 | | | | | | | |
| | | 0 | | | | | | | |
| 0e0209 | Answering machine function | 7 | Answering machine CNG detection time (unit: 10 sec, HEX) (1-7) | Utility Mode Special Setting (4) | 0x64 | 0x64 | 0x64 | XB | 69 |
| | | 6 | | | | | | | |
| | | 5 | | | | | | | |

| Address | Items | Bit No | Contents | Setting | Default | | | CSRC | |
|---|---|---|---|---|---|---|---|---|---|
| | | | | | Japan | North America | Europe | Command | Parameter |
| | | 4 | Answer mode<br>0: OFF<br>1: ON | | | | | | |
| | | 3 | Answering machine DC-LOOP detection time (unit: 5 sec, HEX) (1-15) | | | | | | |
| | | 2 | | | | | | | |
| | | 1 | | | | | | | |
| | | 0 | | | | | | | |
| 0e020a-0e020b | Remote reception password<br>*Line 1 only available | 7 | ASCII [2] | Utility Mode | 0x2a 0x20 | 0x2a 0x20 | 0x2a 0x20 | XB | 6a-6B |
| | | 6 | | | | | | | |
| | | 5 | | | | | | | |
| | | 4 | | | | | | | |
| | | 3 | | | | | | | |
| | | 2 | | | | | | | |
| | | 1 | | | | | | | |
| | | 0 | | | | | | | |
| 0e020c | RBT transmission time | 7 | RingBackTone signal transmission time (unit: 1000 ms, HEX) | - | 0x14 | 0x14 | 0x14 | XB | 6C |
| | | 6 | | | | | | | |
| | | 5 | | | | | | | |
| | | 4 | | | | | | | |
| | | 3 | | | | | | | |
| | | 2 | | | | | | | |
| | | 1 | | | | | | | |
| | | 0 | | | | | | | |
| 0e020d | CAR signal ON time max. value | 7 | CAR ON time max. value (unit: 20 ms, HEX) | - | 0x28 | 0x00 | 0x00 | XB | 6D |
| | | 6 | | | | | | | |
| | | 5 | | | | | | | |
| | | 4 | | | | | | | |
| | | 3 | | | | | | | |
| | | 2 | | | | | | | |
| | | 1 | | | | | | | |
| | | 0 | | | | | | | |
| 0e020e | CAR signal ON time min. value | 7 | CAR ON time min. value (unit: 20 ms, HEX) | - | 0x0a | 0x00 | 0x00 | XB | 6E |
| | | 6 | | | | | | | |
| | | 5 | | | | | | | |
| | | 4 | | | | | | | |
| | | 3 | | | | | | | |
| | | 2 | | | | | | | |
| | | 1 | | | | | | | |
| | | 0 | | | | | | | |
| 0e020f | CAR signal OFF time max. value | 7 | CAR OFF time max. value (unit: 20 ms, HEX) | - | 0x28 | 0x00 | 0x00 | XB | 6F |
| | | 6 | | | | | | | |
| | | 5 | | | | | | | |
| | | 4 | | | | | | | |
| | | 3 | | | | | | | |
| | | 2 | | | | | | | |
| | | 1 | | | | | | | |
| | | 0 | | | | | | | |

### 5.26.8 0e021#

| Address | Items | Bit No | Contents | Setting | Default | | | CSRC | |
|---|---|---|---|---|---|---|---|---|---|
| | | | | | Japan | North America | Europe | Command | Parameter |
| 0e0210 | CAR signal OFF time min. value | 7 | CAR OFF time min. value (unit: 20 ms, HEX) | - | 0x0a | 0x00 | 0x00 | XB | 70 |
| | | 6 | | | | | | | |
| | | 5 | | | | | | | |

| Address | Items | Bit No | Contents | Setting | Default | | | CSRC | |
|---|---|---|---|---|---|---|---|---|---|
| | | | | | Japan | North America | Europe | Command | Parameter |
| | | 4 | | | | | | | |
| | | 3 | | | | | | | |
| | | 2 | | | | | | | |
| | | 1 | | | | | | | |
| | | 0 | | | | | | | |
| 0e0211 | No. of CAR signal detection times | 7 | CAR (information receiving terminal start signal) detection frequency (times, HEX) | - | 0x01 | 0x00 | 0x00 | XB | 71 |
| | | 6 | | | | | | | |
| | | 5 | | | | | | | |
| | | 4 | | | | | | | |
| | | 3 | | | | | | | |
| | | 2 | | | | | | | |
| | | 1 | | | | | | | |
| | | 0 | | | | | | | |
| 0e0212 | Caller ID signal waiting time | 7 | ID waiting time after Caller ID/ DIAL IN primary response (unit 1000 ms, HEX) | - | 0x05 | 0x00 | 0x00 | XB | 72 |
| | | 6 | | | | | | | |
| | | 5 | | | | | | | |
| | | 4 | | | | | | | |
| | | 3 | | | | | | | |
| | | 2 | | | | | | | |
| | | 1 | | | | | | | |
| | | 0 | | | | | | | |
| 0e0213 | Remote reception password entry waiting time | 7 | Password signal (DTMF) detection waiting time (unit: 100 ms, HEX) | - | 0x14 | 0x14 | 0x14 | XB | 73 |
| | | 6 | | | | | | | |
| | | 5 | | | | | | | |
| | | 4 | | | | | | | |
| | | 3 | | | | | | | |
| | | 2 | | | | | | | |
| | | 1 | | | | | | | |
| | | 0 | | | | | | | |
| 0e0214 | Normal/number display automatic line distinction function | 7 | Automatic judgment function<br>0: OFF<br>1: ON | - | 0x83 | 0x00 | 0x00 | XB | 74 |
| | | 6 | | | | | | | |
| | | 5 | | | | | | | |
| | | 4 | | | | | | | |
| | | 3 | V23 signal detection waiting time when judged (x1 sec, HEX) | | | | | | |
| | | 2 | | | | | | | |
| | | 1 | | | | | | | |
| | | 0 | | | | | | | |
| 0e0215 | Monitor speaker (Transmission signal sound) | 7 | PB tone monitoring at the time of offhook | Utility Mode (0-6) | 0x03 | 0x03 | 0x03 | XB | 75 |
| | | 6 | Monitor speaker in communication<br>00: OFF<br>01: Up to DIS<br>10: Up to DIS + RBT transmissions<br>11: ON | | | | | | |
| | | 5 | | | | | | | |
| | | 4 | Speaker volume (HEX) (0-8) | | | | | | |
| | | 3 | | | | | | | |
| | | 2 | | | | | | | |
| | | 1 | | | | | | | |
| | | 0 | | | | | | | |
| 0e0216 - 0e021f | Numeric ID [20] | 7 | ASCII [20]<br>When ID is less than 20 digits, justify to the left and insert space at the top. (No NULL terminator) | Utility Mode | ALL 0x20 | ALL 0x20 | ALL 0x20 | XB | 76 |
| | | 6 | | | | | | | |
| | | 5 | | | | | | | |
| | | 4 | | | | | | | |
| | | 3 | | | | | | | |

| Address | Items | Bit No | Contents | Setting | Default | | | CSRC | |
|---|---|---|---|---|---|---|---|---|---|
| | | | | | Japan | North America | Europe | Command | Parameter |
| | | 2 | | | | | | | |
| | | 1 | | | | | | | |
| | | 0 | | | | | | | |

### 5.26.9 0e022#

| Address | Items | Bit No | Contents | Setting | Default | | | CSRC | |
|---|---|---|---|---|---|---|---|---|---|
| | | | | | Japan | North America | Europe | Command | Parameter |
| 0e0220 - 0e0229 | Numeric ID [20] | 7 | ASCII [20]<br>When ID is less than 20 digits, justify to the left and insert space at the top. (No NULL terminator) | Utility Mode | ALL 0x20 | ALL 0x20 | ALL 0x20 | XB | 80-89 |
| | | 6 | | | | | | | |
| | | 5 | | | | | | | |
| | | 4 | | | | | | | |
| | | 3 | | | | | | | |
| | | 2 | | | | | | | |
| | | 1 | | | | | | | |
| | | 0 | | | | | | | |
| 0e022a | PBX connection mode | 7 | | Utility Mode (0-3) | 0x0f | 0x0f | 0x0f | XB | 8A |
| | | 6 | | | | | | | |
| | | 5 | | | | | | | |
| | | 4 | | | | | | | |
| | | 3 | PBX call<br>0000 - 1001: keypad<br>1011: Reserved<br>1100: Reserved<br>1101: Reserved<br>1110: Reserved<br>1111: PBX unconnected | | | | | | |
| | | 2 | | | | | | | |
| | | 1 | | | | | | | |
| | | 0 | | | | | | | |
| 0e022b | Protocol monitor | 7 | | Utility Mode (5) | 0x00 | 0x00 | 0x00 | XB | 8B |
| | | 6 | | | | | | | |
| | | 5 | TEL/FAX switching RBT monitor sound<br>0: OFF<br>1: ON | | | | | | |
| | | 4 | Inhibit the speaker to sound when off-hook key is pressed<br>1: Inhibit<br>0: Not inhibit | | | | | | |
| | | 3 | | | | | | | |
| | | 2 | | | | | | | |
| | | 1 | | | | | | | |
| | | 0 | | | | | | | |
| 0e022c | Reception function (disable) | 7 | | Utility Mode (0-4) | 0x3f | 0x3f | 0x3f | XB | 8C |
| | | 6 | | | | | | | |
| | | 5 | Name display<br>0: Not inhibit<br>1: Inhibit | | | | | | |
| | | 4 | Compulsory Memory RX<br>0: Not inhibit<br>1: Inhibit | | | | | | |
| | | 3 | No. of caller / name display (number display / (display of subscribers for trace-back system))<br>0: Not inhibit<br>1: Inhibit | | | | | | |
| | | 2 | Closed-area communication<br>0: Not inhibit<br>1: Inhibit | | | | | | |
| | | 1 | Remote RX<br>0: Not inhibit<br>1: Inhibit | | | | | | |

| Address | Items | Bit No | Contents | Setting | Default | | | CSRC | |
|---|---|---|---|---|---|---|---|---|---|
| | | | | | Japan | North America | Europe | Command | Parameter |
| | | 0 | Dialin<br>0: Not inhibit<br>1: Disable | | | | | | |
| 0e022d | PBX outside line access code 1 (BCD) | 7 | 1st digit | Utility Mode | 0xff | 0xff | 0xff | XB | 8D |
| | | 6 | | | | | | | |
| | | 5 | | | | | | | |
| | | 4 | | | | | | | |
| | | 3 | 2nd digit | | | | | | |
| | | 2 | | | | | | | |
| | | 1 | | | | | | | |
| | | 0 | | | | | | | |
| 0e022e | PBX outside line access code 2 (BCD) | 7 | 3rd digit | Utility Mode | 0xff | 0xff | 0xff | XB | 8E |
| | | 6 | | | | | | | |
| | | 5 | | | | | | | |
| | | 4 | | | | | | | |
| | | 3 | 4th digit | | | | | | |
| | | 2 | | | | | | | |
| | | 1 | | | | | | | |
| | | 0 | | | | | | | |
| 0e022f | Limit of long size reception | 7 | | - | 0x00 | 0x00 | 0x00 | XB | 8F |
| | | 6 | | | | | | | |
| | | 5 | | | | | | | |
| | | 4 | | | | | | | |
| | | 3 | | | | | | | |
| | | 2 | | | | | | | |
| | | 1 | | | | | | | |
| | | 0 | Limit of long size reception<br>0: Limit<br>1: Unlimited | | | | | | |

### 5.26.10 0e023#

| Address | Items | Bit No | Contents | Setting | Default | | | CSRC | |
|---|---|---|---|---|---|---|---|---|---|
| | | | | | Japan | North America | Europe | Command | Parameter |
| 0e0230 | Max. size of long original received (In the case of 400 dpi or less) | 7 | When the resolution for reception is 400 dpi or less, the size of a long original received that is regarded as an error (The maximum length is a decimal value x 10 mm. 0 is regarded as 1000 mm.) ) | - | 0x64 | 0x64 | 0x64 | XB | 90 |
| | | 6 | | | | | | | |
| | | 5 | | | | | | | |
| | | 4 | | | | | | | |
| | | 3 | | | | | | | |
| | | 2 | | | | | | | |
| | | 1 | | | | | | | |
| | | 0 | | | | | | | |
| 0 e0231 | Max. size of long original received (In the case of 600 dpi) | 7 | When the resolution for reception is 600 dpi, the size of a long original received that is regarded as an error (The maximum length is a decimal value x 10 mm. 0 is regarded as 1000 mm.) ) | - | 0x64 | 0x64 | 0x64 | XB | 91 |
| | | 6 | | | | | | | |
| | | 5 | | | | | | | |
| | | 4 | | | | | | | |
| | | 3 | | | | | | | |
| | | 2 | | | | | | | |
| | | 1 | | | | | | | |
| | | 0 | | | | | | | |
| 0 e0232 | Voice response output level adjustment | 7 | | - | 0x62 | 0x62 | 0x62 | XB | 92 |
| | | 6 | | | | | | | |
| | | 5 | | | | | | | |
| | | 4 | | | | | | | |
| | | 3 | Voice response volume (HEX)<br>0000: min - 1111: max | | | | | | |
| | | 2 | | | | | | | |

| Address | Items | Bit No | Contents | Setting | Default | | | CSRC | |
|---|---|---|---|---|---|---|---|---|---|
| | | | | | Japan | North America | Europe | Command | Parameter |
| | | 1 | | | | | | | |
| | | 0 | | | | | | | |
| 0 e0233 | Monitor speaker (Received signal sound) | 7 | | Utility Mode (0-4) | 0x04 | 0x04 | 0x04 | XB | 93 |
| | | 6 | | | | | | | |
| | | 5 | | | | | | | |
| | | 4 | Speaker volume (HEX) (0-8) | | | | | | |
| | | 3 | | | | | | | |
| | | 2 | | | | | | | |
| | | 1 | | | | | | | |
| | | 0 | | | | | | | |
| 0 e0234 - 0e0239 | Reserved area | 7 | | - | ALL 0x00 | ALL 0x00 | ALL 0x00 | XB | 94 - 99 |
| | | 6 | | | | | | | |
| | | 5 | | | | | | | |
| | | 4 | | | | | | | |
| | | 3 | | | | | | | |
| | | 2 | | | | | | | |
| | | 1 | | | | | | | |
| | | 0 | | | | | | | |

### 5.26.11 0f002#

| Address | Items | Bit No | Contents | Setting | Default | | | CSRC | |
|---|---|---|---|---|---|---|---|---|---|
| | | | | | Japan | North America | Europe | Command | Parameter |
| 0f0020 | Reception main scan line resolution ability [0] | 7 | 400 dpi | - | 0xaa | 0xaa | 0xaa | X2 | 20 |
| | | 6 | 300 dpi | | | | | | |
| | | 5 | 200 dpi | | | | | | |
| | | 4 | | | | | | | |
| | | 3 | 16 pels/mm | | | | | | |
| | | 2 | | | | | | | |
| | | 1 | 8 pels/mm | | | | | | |
| | | 0 | | | | | | | |
| 0f0021 | Reception main scan line resolution ability [1] | 7 | | - | 0x01 | 0x01 | 0x01 | X2 | 21 |
| | | 6 | | | | | | | |
| | | 5 | | | | | | | |
| | | 4 | | | | | | | |
| | | 3 | | | | | | | |
| | | 2 | (1200 dpi) | | | | | | |
| | | 1 | 800 dpi | | | | | | |
| | | 0 | 600 dpi | | | | | | |
| 0f0022 | Reception sub scanning resolution ability [0] | 7 | 400 dpi | - | 0xbb | 0xbb | 0xbb | X2 | 22 |
| | | 6 | 300 dpi | | | | | | |
| | | 5 | 200 dpi | | | | | | |
| | | 4 | 100 dpi | | | | | | |
| | | 3 | 15.4 l/mm | | | | | | |
| | | 2 | | | | | | | |
| | | 1 | 7.7 l/mm | | | | | | |
| | | 0 | 3.85 l/mm | | | | | | |
| 0f0023 | Reception sub scanning resolution ability [1] | 7 | | - | 0x01 | 0x01 | 0x01 | X2 | 23 |
| | | 6 | | | | | | | |
| | | 5 | | | | | | | |
| | | 4 | | | | | | | |
| | | 3 | | | | | | | |
| | | 2 | (1200 dpi) | | | | | | |
| | | 1 | 800 dpi | | | | | | |
| | | 0 | 600 dpi | | | | | | |

| Address | Items | Bit No | Contents | Setting | Default | | | CSRC | |
|---|---|---|---|---|---|---|---|---|---|
| | | | | | Japan | North America | Europe | Command | Parameter |
| 0f0024 | Reception coding method ability | 7 | | - | 0x1f | 0x1f | 0x1f | X2 | 24 |
| | | 6 | | | | | | | |
| | | 5 | (JPEG) | | | | | | |
| | | 4 | JBIG | | | | | | |
| | | 3 | MMR | | | | | | |
| | | 2 | MR | | | | | | |
| | | 1 | MH | | | | | | |
| | | 0 | THRU | | | | | | |
| 0f0025 | Received document width ability | 7 | | - | 0x0e | 0x0e | 0x0e | X2 | 25 |
| | | 6 | | | | | | | |
| | | 5 | (Legal) | | | | | | |
| | | 4 | (Letter) | | | | | | |
| | | 3 | A3 | | | | | | |
| | | 2 | B4 | | | | | | |
| | | 1 | A4 | | | | | | |
| | | 0 | (A5) | | | | | | |
| 0f0026 | Received document length ability | 7 | | - | 0x46 | 0x46 | 0x46 | X2 | 26 |
| | | 6 | Unlimited | | | | | | |
| | | 5 | (Legal) | | | | | | |
| | | 4 | (Letter) | | | | | | |
| | | 3 | | | | | | | |
| | | 2 | B4 | | | | | | |
| | | 1 | A4 | | | | | | |
| | | 0 | (A5) | | | | | | |
| 0f0027 | Reception speed ability [0] | 7 | | - | 0x1b | 0x1b | 0x1b | X2 | 27 |
| | | 6 | | | | | | | |
| | | 5 | | | | | | | |
| | | 4 | V.29-96 | | | | | | |
| | | 3 | V.29-72 | | | | | | |
| | | 2 | | | | | | | |
| | | 1 | V.27-48 | | | | | | |
| | | 0 | V.27-24 | | | | | | |
| 0f0028 | Reception speed ability [1] | 7 | V.17-144 | - | 0xfc | 0xfc | 0xfc | X2 | 28 |
| | | 6 | V.17-120 | | | | | | |
| | | 5 | V.17-96 | | | | | | |
| | | 4 | V.17-72 | | | | | | |
| | | 3 | V.33-144 | | | | | | |
| | | 2 | V.33-120 | | | | | | |
| | | 1 | (TCM-96) | | | | | | |
| | | 0 | (TCM-72) | | | | | | |
| 0f0029 | Reception speed ability [2] | 7 | V.34-192 | - | 0xff | 0xff | 0xff | X2 | 29 |
| | | 6 | V.34-168 | | | | | | |
| | | 5 | V.34-144 | | | | | | |
| | | 4 | V.34-120 | | | | | | |
| | | 3 | V.34-96 | | | | | | |
| | | 2 | V.34-72 | | | | | | |
| | | 1 | V.34-48 | | | | | | |
| | | 0 | V.34-24 | | | | | | |
| 0f002a | Reception speed ability [3] | 7 | | - | 0x3f | 0x3f | 0x3f | X2 | 2A |
| | | 6 | | | | | | | |
| | | 5 | V.34-336 | | | | | | |
| | | 4 | V.34-312 | | | | | | |
| | | 3 | V.34-288 | | | | | | |
| | | 2 | V.34-264 | | | | | | |
| | | 1 | V.34-240 | | | | | | |

| Address | Items | Bit No | Contents | Setting | Default | | | CSRC | |
|---|---|---|---|---|---|---|---|---|---|
| | | | | | Japan | North America | Europe | Command | Parameter |
| | | 0 | V.34-216 | | | | | | |
| 0f002b | Reception MSLT ability | 7 | T3.85 or 200 x 100dpi (0-40) ms unit | - | 0x05 | 0x05 | 0x05 | X2 | 2B |
| | | 6 | | | | | | | |
| | | 5 | | | | | | | |
| | | 4 | | | | | | | |
| | | 3 | | | | | | | |
| | | 2 | | | | | | | |
| | | 1 | | | | | | | |
| | | 0 | | | | | | | |
| 0f002c | Reception MSLT ability | 7 | T7.7 or 200 x 200dpi (0-40) ms unit | - | 0x05 | 0x05 | 0x05 | X2 | 2C |
| | | 6 | | | | | | | |
| | | 5 | | | | | | | |
| | | 4 | | | | | | | |
| | | 3 | | | | | | | |
| | | 2 | | | | | | | |
| | | 1 | | | | | | | |
| | | 0 | | | | | | | |
| 0f002d | Reception MSLT ability | 7 | T11.55 or 300 x 300dpi (0-40) ms unit | - | 0x05 | 0x05 | 0x05 | X2 | 2D |
| | | 6 | | | | | | | |
| | | 5 | | | | | | | |
| | | 4 | | | | | | | |
| | | 3 | | | | | | | |
| | | 2 | | | | | | | |
| | | 1 | | | | | | | |
| | | 0 | | | | | | | |
| 0f002e | Reception MSLT ability | 7 | T15.4 or 400 x 400dpi or 600 x 600dpi (0-40) ms unit | - | 0x05 | 0x05 | 0x05 | X2 | 2E |
| | | 6 | | | | | | | |
| | | 5 | | | | | | | |
| | | 4 | | | | | | | |
| | | 3 | | | | | | | |
| | | 2 | | | | | | | |
| | | 1 | | | | | | | |
| | | 0 | | | | | | | |
| 0f002f | Reception ECM ability | 7 | | - | 0x01 | 0x01 | 0x01 | X2 | 2F |
| | | 6 | | | | | | | |
| | | 5 | | | | | | | |
| | | 4 | | | | | | | |
| | | 3 | | | | | | | |
| | | 2 | | | | | | | |
| | | 1 | | | | | | | |
| | | 0 | ECM reception capability<br>0: OFF<br>1: ON | | | | | | |

### 5.26.12 0f003#

| Address | Items | Bit No | Contents | Setting | Default | | | CSRC | |
|---|---|---|---|---|---|---|---|---|---|
| | | | | | Japan | North America | Europe | Command | Parameter |
| 0f0030 | Reception protocol ability | 7 | | - | 0x11 | 0x11 | 0x11 | X2 | 30 |
| | | 6 | | | | | | | |
| | | 5 | | | | | | | |
| | | 4 | V.8/V.34 | | | | | | |
| | | 3 | | | | | | | |
| | | 2 | | | | | | | |
| | | 1 | | | | | | | |

| Address | Items | Bit No | Contents | Setting | Default | | | CSRC | |
|---|---|---|---|---|---|---|---|---|---|
| | | | | | Japan | North America | Europe | Command | Parameter |
| | | 0 | G3S | | | | | | |
| 0f0031 | Reception option frame ability | 7 | | - | 0x07 | 0x07 | 0x07 | X2 | 31 |
| | | 6 | | | | | | | |
| | | 5 | | | | | | | |
| | | 4 | (BFT) | | | | | | |
| | | 3 | (BTM) | | | | | | |
| | | 2 | PWD | | | | | | |
| | | 1 | (SEP) | | | | | | |
| | | 0 | SUB | | | | | | |
| 0f0032 - 0f003f | Reserved area | 7 | | - | ALL 0x00 | ALL 0x00 | ALL 0x00 | X2 | 32 - 3F |
| | | 6 | | | | | | | |
| | | 5 | | | | | | | |
| | | 4 | | | | | | | |
| | | 3 | | | | | | | |
| | | 2 | | | | | | | |
| | | 1 | | | | | | | |
| | | 0 | | | | | | | |

### 5.26.13 10002#

| Address | Items | Bit No | Contents | Setting | Default | | | CSRC | |
|---|---|---|---|---|---|---|---|---|---|
| | | | | | Japan | North America | Europe | Command | Parameter |
| 100020 | Transmission main scan line resolution instruction [0] | 7 | 400 dpi | - | 0x22 | 0x22 | 0x22 | X2 | 60 |
| | | 6 | 300 dpi | | | | | | |
| | | 5 | 200 dpi | | | | | | |
| | | 4 | | | | | | | |
| | | 3 | 16 pels/mm | | | | | | |
| | | 2 | | | | | | | |
| | | 1 | 8 pels/mm | | | | | | |
| | | 0 | | | | | | | |
| 100021 | Transmission main scan line resolution instruction [1] | 7 | | - | 0x01 | 0x01 | 0x01 | X2 | 61 |
| | | 6 | | | | | | | |
| | | 5 | | | | | | | |
| | | 4 | | | | | | | |
| | | 3 | | | | | | | |
| | | 2 | (1200 dpi) | | | | | | |
| | | 1 | 800 dpi | | | | | | |
| | | 0 | 600 dpi | | | | | | |
| 100022 | Transmission sub scanning resolution instruction [0] | 7 | 400 dpi | - | 0x11 | 0x11 | 0x11 | X2 | 62 |
| | | 6 | 300 dpi | | | | | | |
| | | 5 | 200 dpi | | | | | | |
| | | 4 | 100 dpi | | | | | | |
| | | 3 | 15.4 l/mm | | | | | | |
| | | 2 | | | | | | | |
| | | 1 | 7.7 l/mm | | | | | | |
| | | 0 | 3.85 l/mm | | | | | | |
| 100023 | Transmission sub scanning resolution instruction [1] | 7 | | - | 0x01 | 0x01 | 0x01 | X2 | 63 |
| | | 6 | | | | | | | |
| | | 5 | | | | | | | |
| | | 4 | | | | | | | |
| | | 3 | | | | | | | |
| | | 2 | (1200 dpi) | | | | | | |
| | | 1 | 800 dpi | | | | | | |
| | | 0 | 600 dpi | | | | | | |

| Address | Items | Bit No | Contents | Setting | Default | | | CSRC | |
|---|---|---|---|---|---|---|---|---|---|
| | | | | | Japan | North America | Europe | Command | Parameter |
| 100024 | Transmission coding method instruction | 7 | | - | 0x1f | 0x1f | 0x1f | X2 | 64 |
| | | 6 | | | | | | | |
| | | 5 | (JPEG) | | | | | | |
| | | 4 | JBIG | | | | | | |
| | | 3 | MMR | | | | | | |
| | | 2 | MR | | | | | | |
| | | 1 | MH | | | | | | |
| | | 0 | THRU | | | | | | |
| 100025 | Transmission document width instruction | 7 | | - | 0x0e | 0x0e | 0x0e | X2 | 65 |
| | | 6 | | | | | | | |
| | | 5 | (Legal) | | | | | | |
| | | 4 | (Letter) | | | | | | |
| | | 3 | A3 | | | | | | |
| | | 2 | B4 | | | | | | |
| | | 1 | A4 | | | | | | |
| | | 0 | (A5) | | | | | | |
| 100026 | Transmission document length instruction | 7 | | - | 0x46 | 0x46 | 0x46 | X2 | 66 |
| | | 6 | Unlimited | | | | | | |
| | | 5 | (Legal) | | | | | | |
| | | 4 | (Letter) | | | | | | |
| | | 3 | | | | | | | |
| | | 2 | B4 | | | | | | |
| | | 1 | A4 | | | | | | |
| | | 0 | (A5) | | | | | | |
| 100027 | Transmission speed instruction [0] | 7 | | - | 0x1b | 0x1b | 0x1b | X2 | 67 |
| | | 6 | | | | | | | |
| | | 5 | | | | | | | |
| | | 4 | V.29-96 | | | | | | |
| | | 3 | V.29-72 | | | | | | |
| | | 2 | | | | | | | |
| | | 1 | V.27-48 | | | | | | |
| | | 0 | V.27-24 | | | | | | |
| 100028 | Transmission speed instruction [1] | 7 | V.17-144 | - | 0xf0 | 0xf0 | 0xf0 | X2 | 68 |
| | | 6 | V.17-120 | | | | | | |
| | | 5 | V.17-96 | | | | | | |
| | | 4 | V.17-72 | | | | | | |
| | | 3 | V.33-144 | | | | | | |
| | | 2 | V.33-120 | | | | | | |
| | | 1 | (TCM-96) | | | | | | |
| | | 0 | (TCM-72) | | | | | | |
| 100029 | Transmission speed instruction [2] | 7 | V.34-192 | - | 0xff | 0xff | 0xff | X2 | 69 |
| | | 6 | V.34-168 | | | | | | |
| | | 5 | V.34-144 | | | | | | |
| | | 4 | V.34-120 | | | | | | |
| | | 3 | V.34-96 | | | | | | |
| | | 2 | V.34-72 | | | | | | |
| | | 1 | V.34-48 | | | | | | |
| | | 0 | V.34-24 | | | | | | |
| 10002a | Transmission speed instruction [3] | 7 | | - | 0x3f | 0x3f | 0x3f | X2 | 6A |
| | | 6 | | | | | | | |
| | | 5 | V.34-336 | | | | | | |
| | | 4 | V.34-312 | | | | | | |
| | | 3 | V.34-288 | | | | | | |
| | | 2 | V.34-264 | | | | | | |
| | | 1 | V.34-240 | | | | | | |

| Address | Items | Bit No | Contents | Setting | Default | | | CSRC | |
|---|---|---|---|---|---|---|---|---|---|
| | | | | | Japan | North America | Europe | Command | Parameter |
| | | 0 | V.34-216 | | | | | | |
| 10002b | Transmission MSLT instruction | 7 | T3.85 or 200 x 100dpi (0-40) ms unit | - | 0x05 | 0x05 | 0x05 | X2 | 6B |
| | | 6 | | | | | | | |
| | | 5 | | | | | | | |
| | | 4 | | | | | | | |
| | | 3 | | | | | | | |
| | | 2 | | | | | | | |
| | | 1 | | | | | | | |
| | | 0 | | | | | | | |
| 10002c | Transmission MSLT instruction | 7 | T7.7 or 200 x 200dpi (0-40) ms unit | - | 0x05 | 0x05 | 0x05 | X2 | 6C |
| | | 6 | | | | | | | |
| | | 5 | | | | | | | |
| | | 4 | | | | | | | |
| | | 3 | | | | | | | |
| | | 2 | | | | | | | |
| | | 1 | | | | | | | |
| | | 0 | | | | | | | |
| 10002d | Transmission MSLT instruction | 7 | T11.55 or 300 x 300dpi (0-40) ms unit | - | 0x05 | 0x05 | 0x05 | X2 | 6D |
| | | 6 | | | | | | | |
| | | 5 | | | | | | | |
| | | 4 | | | | | | | |
| | | 3 | | | | | | | |
| | | 2 | | | | | | | |
| | | 1 | | | | | | | |
| | | 0 | | | | | | | |
| 10002e | Transmission MSLT instruction | 7 | T15.4 or 400 x 400dpi or 600 x 600dpi (0-40) ms unit | - | 0x05 | 0x05 | 0x05 | X2 | 6E |
| | | 6 | | | | | | | |
| | | 5 | | | | | | | |
| | | 4 | | | | | | | |
| | | 3 | | | | | | | |
| | | 2 | | | | | | | |
| | | 1 | | | | | | | |
| | | 0 | | | | | | | |
| 10002f | Transmission ECM instruction | 7 | | - | 0x01 | 0x01 | 0x01 | X2 | 6F |
| | | 6 | | | | | | | |
| | | 5 | | | | | | | |
| | | 4 | | | | | | | |
| | | 3 | | | | | | | |
| | | 2 | | | | | | | |
| | | 1 | ECM transmission frame size<br>0: 256<br>1: 64 | | | | | | |
| | | 0 | ECM transmission instruction<br>0: OFF<br>1: ON | | | | | | |

### 5.26.14 10003#

| Address | Items | Bit No | Contents | Setting | Default | | | CSRC | |
|---|---|---|---|---|---|---|---|---|---|
| | | | | | Japan | North America | Europe | Command | Parameter |
| 100030 | Transmission protocol instruction | 7 | | - | 0x11 | 0x11 | 0x11 | X2 | 70 |
| | | 6 | | | | | | | |
| | | 5 | | | | | | | |
| | | 4 | V.8/V.34 | | | | | | |
| | | 3 | | | | | | | |
| | | 2 | | | | | | | |

| Address | Items | Bit No | Contents | Setting | Default | | | CSRC | |
|---|---|---|---|---|---|---|---|---|---|
| | | | | | Japan | North America | Europe | Command | Parameter |
| | | 1 | | | | | | | |
| | | 0 | G3S | | | | | | |
| 100031 | Transmission option frame instruction | 7 | | - | 0x00 | 0x00 | 0x00 | X2 | 71 |
| | | 6 | | | | | | | |
| | | 5 | | | | | | | |
| | | 4 | (BFT) | | | | | | |
| | | 3 | (BTM) | | | | | | |
| | | 2 | PWD | | | | | | |
| | | 1 | (SEP) | | | | | | |
| | | 0 | SUB | | | | | | |
| 100032 - 10003f | Reserved area 1 | 7 | | - | ALL 0x00 | ALL 0x00 | ALL 0x00 | X2 | 72 - 7F |
| | | 6 | | | | | | | |
| | | 5 | | | | | | | |
| | | 4 | | | | | | | |
| | | 3 | | | | | | | |
| | | 2 | | | | | | | |
| | | 1 | | | | | | | |
| | | 0 | | | | | | | |

## 5.27 FAX setting (Address parameter list: for line 3)

### 5.27.1 0e02b#

| Address | Items | Bit No | Contents | Setting | Default | | | CSRC | |
|---|---|---|---|---|---|---|---|---|---|
| | | | | | Japan | North America | Europe | Command | Parameter |
| 0e02b0 | Transmission ATT | 7 | Tone signal/FSK transmission ATT (HEX) every 1 dBm (0 to -15dBm) | Utility Mode Special Setting | 0xaa | 0xaa | 0xaa | XB | 00 |
| | | 6 | | | | | | | |
| | | 5 | | | | | | | |
| | | 4 | | | | | | | |
| | | 3 | High-speed signal transmission ATT (HEX) every 1 dBm (0 to -15dBm) | | | | | | |
| | | 2 | | | | | | | |
| | | 1 | | | | | | | |
| | | 0 | | | | | | | |
| 0e02b1 | CED transmission ATT | 7 | | Utility Mode Special Setting (0-3) | 0x0a | 0x0a | 0x0a | XB | 01 |
| | | 6 | | | | | | | |
| | | 5 | | | | | | | |
| | | 4 | | | | | | | |
| | | 3 | CED/ANS transmission ATT (HEX) every 1 dBm (0 to -15dBm) | | | | | | |
| | | 2 | | | | | | | |
| | | 1 | | | | | | | |
| | | 0 | | | | | | | |
| 0e02b2 | CD/SED ON level | 7 | | Utility Mode Special Setting (0,1) | 0x03 | 0x03 | 0x03 | XB | 02 |
| | | 6 | | | | | | | |
| | | 5 | | | | | | | |
| | | 4 | | | | | | | |
| | | 3 | | | | | | | |
| | | 2 | | | | | | | |
| | | 1 | CD/SED ON level [dBm]<br>00: -33<br>01: -38<br>10: -43<br>11: -48 | | | | | | |
| | | 0 | | | | | | | |
| 0e02b3 | Cable equalizer | 7 | | Utility Mode Special Setting (4,5) | 0x00 | 0x00 | 0x00 | XB | 03 |
| | | 6 | | | | | | | |
| | | 5 | Cable EQL transmission selection<br>00: OFF<br>01: Send only | | | | | | |

| Address | Items | Bit No | Contents | Setting | Default | | | CSRC | |
|---|---|---|---|---|---|---|---|---|---|
| | | | | | Japan | North America | Europe | Command | Parameter |
| | | 4 | 10: Receive only<br>11: Send and receive | | | | | | |
| | | 3 | | | | | | | |
| | | 2 | | | | | | | |
| | | 1 | Cable EQL parameter selection<br>00: 1.8 km<br>01: 3.6km<br>10: 7.2km<br>11: NTT4 | | | | | | |
| | | 0 | | | | | | | |
| 0e02b4 | V34 Points | 7 | | Utility Mode Special Setting (4,5) | 0x00 | 0x00 | 0x00 | XB | 04 |
| | | 6 | | | | | | | |
| | | 5 | | | | | | | |
| | | 4 | | | | | | | |
| | | 3 | | | | | | | |
| | | 2 | | | | | | | |
| | | 1 | V34 Point<br>00: Auto<br>01: 16-point<br>10: 4-point | | | | | | |
| | | 0 | | | | | | | |
| 0e02b5 | TEL/FAX switching (For Japan models only)<br>*Use Line 1 only | 7 | Time from vocal response to RBT transmission (CNG detection waiting time 2)<br>0: 4 sec.<br>1: 2 sec. | Utility Mode Special Setting (4,5) | 0x00 | 0x00 | 0x00 | XB | 05 |
| | | 6 | Time from reception to voice response transmission (CNG detection waiting time 1)<br>0: 2 sec.<br>1: 4 sec. | | | | | | |
| | | 5 | TEL/FAX switching mode<br>0: Disabled<br>1: Enabled | | | | | | |
| | | 4 | External telephone no ringing setting<br>0: Disabled<br>1: Enabled (disconnected) | | | | | | |
| | | 3 | TEL/FAX switching ON response details<br>0: Voice response + RBT transmission<br>1: RBT transmission only | | | | | | |
| | | 2 | | | | | | | |
| | | 1 | | | | | | | |
| | | 0 | | | | | | | |
| 0e02b6 | Ring Back Tone parameter (For Japan models only)<br>*Use Line 1 only | 7 | RBT form<br>000: No<br>001: Japan<br>010: US<br>011: UK<br>100: Germany<br>101 to 111: Others | Utility Mode Special Setting (0-3,5-7) | 0x2a | 0x4a | 0x68 | XB | 06 |
| | | 6 | | | | | | | |
| | | 5 | | | | | | | |
| | | 4 | CED transmitted upon TEL/FAX switching | | | | | | |
| | | 3 | RBT transmission level (HEX)<br>0 to -15 dBm | | | | | | |
| | | 2 | | | | | | | |
| | | 1 | | | | | | | |
| | | 0 | | | | | | | |
| 0e02b7 | International com mode operation | 7 | DIS waiting frequency<br>0: Always once<br>1: Twice in overseas communication | Utility Mode Special Setting (6,7) | 0x40 | 0x40 | 0x40 | XB | 07 |
| | | 6 | Overseas communication<br>0: No<br>1: Yes | | | | | | |

| Address | Items | Bit No | Contents | Setting | Default | | | CSRC | |
|---|---|---|---|---|---|---|---|---|---|
| | | | | | Japan | North America | Europe | Command | Parameter |
| | | 5 | | | | | | | |
| | | 4 | | | | | | | |
| | | 3 | | | | | | | |
| | | 2 | | | | | | | |
| | | 1 | | | | | | | |
| | | 0 | | | | | | | |
| 0e02b8 | Starting speed in international mode (V29 modem) | 7 | | Utility Mode Special Setting (0,1,3,4) | 0x02 | 0x02 | 0x02 | XB | 08 |
| | | 6 | | | | | | | |
| | | 5 | | | | | | | |
| | | 4 | 9600 bps/V.29 | | | | | | |
| | | 3 | 7200 bps/V.29 | | | | | | |
| | | 2 | | | | | | | |
| | | 1 | 4800 bps/V.27 ter | | | | | | |
| | | 0 | 2400 bps/V.27 ter | | | | | | |
| 0e02b9 | Starting speed in international mode (V17 or V33 modem) | 7 | 14400 bps/V.17 | Utility Mode Special Setting (4-7) | 0x10 | 0x10 | 0x10 | XB | 09 |
| | | 6 | 12000 bps/V.17 | | | | | | |
| | | 5 | 9600 bps/V.17 | | | | | | |
| | | 4 | 7200 bps/V.17 | | | | | | |
| | | 3 | | | | | | | |
| | | 2 | | | | | | | |
| | | 1 | | | | | | | |
| | | 0 | | | | | | | |
| 0e02ba | Starting speed in international mode (V34) | 7 | 33600 bps/V.34 | Utility Mode Special Setting | 0x20 | 0x20 | 0x20 | XB | 0A |
| | | 6 | 31200 bps/V.34 | | | | | | |
| | | 5 | 28800 bps/V.34 | | | | | | |
| | | 4 | 26400 bps/V.34 | | | | | | |
| | | 3 | 24000 bps/V.34 | | | | | | |
| | | 2 | 21600 bps/V.34 | | | | | | |
| | | 1 | 19200 bps/V.34 | | | | | | |
| | | 0 | 16800 bps/V.34 | | | | | | |
| 0e02bb | CD OFF timer | 7 | CD OFF timer (Unit: 100 ms, HEX) | - | 0x14 | 0x14 | 0x14 | XB | 0B |
| | | 6 | | | | | | | |
| | | 5 | | | | | | | |
| | | 4 | | | | | | | |
| | | 3 | | | | | | | |
| | | 2 | | | | | | | |
| | | 1 | | | | | | | |
| | | 0 | | | | | | | |
| 0e02bc | CD ON integration time | 7 | CD ON integration time (Unit: 100 ms. HEX) | - | 0x06 | 0x06 | 0x06 | XB | 0C |
| | | 6 | | | | | | | |
| | | 5 | | | | | | | |
| | | 4 | | | | | | | |
| | | 3 | | | | | | | |
| | | 2 | | | | | | | |
| | | 1 | | | | | | | |
| | | 0 | | | | | | | |
| 0e02bd | Max. allowable symbol speed | 7 | V34 controll ch data rate<br>0: 1200<br>1: 2400 | Utility Mode Special Setting (0-3,7) | 0x05 | 0x05 | 0x05 | XB | 0D |
| | | 6 | | | | | | | |
| | | 5 | | | | | | | |
| | | 4 | | | | | | | |
| | | 3 | Max. allowable symbol speed<br>0000: 2400<br>0001: Reserved<br>0010: 2800<br>0011: 3000 | | | | | | |
| | | 2 | | | | | | | |
| | | 1 | | | | | | | |

| Address | Items | Bit No | Contents | Setting | Default | | | CSRC | |
|---|---|---|---|---|---|---|---|---|---|
| | | | | | Japan | North America | Europe | Command | Parameter |
| | | 0 | 0100: 3200<br>0101: 3429 | | | | | | |
| 0e02be | V34 primary channel fallback | 7 | No. of frame errors subjected to fallback (HEX) | - | 0x03 | 0x03 | 0x03 | XB | 0E |
| | | 6 | | | | | | | |
| | | 5 | | | | | | | |
| | | 4 | | | | | | | |
| | | 3 | | | | | | | |
| | | 2 | | | | | | | |
| | | 1 | | | | | | | |
| | | 0 | | | | | | | |

### 5.27.2 0e02c#

| Address | Items | Bit No | Contents | Setting | Default | | | CSRC | |
|---|---|---|---|---|---|---|---|---|---|
| | | | | | Japan | North America | Europe | Command | Parameter |
| 0e02c0 | V34 off Rx-V34 off time after error | 7 | Timer value after V34 reception error used to reset V34 off reception (min, HEX) (Valid only when transmission side cannot be specified) | - | 0x0a | 0x0a | 0x0a | XB | 10 |
| | | 6 | | | | | | | |
| | | 5 | | | | | | | |
| | | 4 | | | | | | | |
| | | 3 | | | | | | | |
| | | 2 | | | | | | | |
| | | 1 | | | | | | | |
| | | 0 | | | | | | | |
| 0e02c1 | V34 off Rx-V17 OK Rx times to reset V34 off Rx | 7 | No. of continuous success of V17 receptions used to reset V34 off reception after V34 reception error (times, HEX) (Valid only when transmission side can be specified with Caller ID) | - | 0x0a | 0x0a | 0x0a | XB | 11 |
| | | 6 | | | | | | | |
| | | 5 | | | | | | | |
| | | 4 | | | | | | | |
| | | 3 | | | | | | | |
| | | 2 | | | | | | | |
| | | 1 | | | | | | | |
| | | 0 | | | | | | | |
| 0e02c2 | (Inhibit of) V34 off Rx-Function ON/ OFF | 7 | | - | 0x00 | 0x02 | 0x02 | XB | 12 |
| | | 6 | | | | | | | |
| | | 5 | | | | | | | |
| | | 4 | | | | | | | |
| | | 3 | | | | | | | |
| | | 2 | | | | | | | |
| | | 1 | V.34 OFF reset mode = No. of successful consecutive V.17 reception times (ID specified)<br>0: Enabled<br>1: Disabled | | | | | | |
| | | 0 | V.34 OFF reset mode = time (ID cannot be specified)<br>0: Enabled<br>1: Disabled | | | | | | |
| 0e02c3 | JBIG parameter | 7 | | - | 0x01 | 0x01 | 0x01 | XB | 13 |
| | | 6 | | | | | | | |
| | | 5 | | | | | | | |
| | | 4 | | | | | | | |
| | | 3 | | | | | | | |
| | | 2 | | | | | | | |
| | | 1 | Use of following FP JBIG option LO size at reduction<br>0: No<br>1: Yes | | | | | | |

| Address | Items | Bit No | Contents | Setting | Default | | | CSRC | |
|---|---|---|---|---|---|---|---|---|---|
| | | | | | Japan | North America | Europe | Command | Parameter |
| | | 0 | JBIG optional L0 capacity<br>0: No<br>1: Yes | | | | | | |
| 0e02c4 | JBIG LO size | 7<br>6<br>5<br>4<br>3<br>2<br>1<br>0 | JBIG optional LO size used for reduction (HEX) (setting range: 0x01to0xffffffff)<br>[0] = HH, [1] = HL, [2] = LH, [3] = LL | - | 0x00<br>0x00<br>0x00<br>0x80 | 0x00<br>0x00<br>0x00<br>0x80 | 0x00<br>0x00<br>0x00<br>0x80 | XB | 14 |
| 0e02c5 | (Inhibit of) JBIG off Rx-Function ON/ OFF | 7<br>6<br>5<br>4<br>3<br>2 | | - | 0x00 | 0x00 | 0x00 | XB | 18 |
| | | 1 | JBIG off function at A3 high-definition reception (DIS retransmission)<br>0: OFF<br>1: ON | | | | | | |
| | | 0 | JBIG off function after JBIG reception error<br>0: Enable<br>1: Disable | | | | | | |
| 0e02c6 - 0e02c9 | JBIG off Rx-JBIG off time after error | 7<br>6<br>5<br>4<br>3<br>2<br>1<br>0 | Timer value after JBIG reception error to reset JBIG off reception (min, HEX) (10 min. if 0) | - | 0x0a | 0x0a | 0x0a | XB | 19 |
| 0e02ca | PBX dial tone detection frequency pattern | 7 | | - | 0x08 | 0x00 | 0x00 | XB | 1A |
| | | 6 | Tone type<br>0: Single<br>1: Dual | | | | | | |
| | | 5 | | | | | | | |
| | | 4<br>3<br>2<br>1<br>0 | PBX dial tone detection frequency pattern<br>1: 155 ±65 Hz<br>2: 375 ±125 Hz<br>3: 400 ±90 Hz<br>4: 400 ±100 Hz<br>5: 420 ±90 Hz<br>6: 425 ±75 Hz<br>7: 425 ±95 Hz<br>8: 425 ±125 Hz<br>9: 430 ±90 Hz<br>10: 435 ±85 Hz<br>11: 440 ±90 Hz<br>12: 445 ±125 Hz<br>13: 450 ±50 Hz<br>14: 450 ±70 Hz<br>15: 450 ±100 Hz<br>16: 450 ±120 Hz<br>17: 460 ±140 Hz<br>18: 465 ±205 Hz<br>19: 475 ±175 Hz<br>20: 480 ±90 Hz<br>21: 480 ±190 Hz<br>22: 1155 ±25 Hz | | | | | | |

| Address | Items | Bit No | Contents | Setting | Default | | | CSRC | |
|---|---|---|---|---|---|---|---|---|---|
| | | | | | Japan | North America | Europe | Command | Parameter |
| 0e02cb | PBX dial tone detection time | 7 | PBX dial tone detection time or max. ON time value (unit: 20 ms, HEX) | - | 0x32 | 0x00 | 0x00 | XB | 1B |
| | | 6 | | | | | | | |
| | | 5 | | | | | | | |
| | | 4 | | | | | | | |
| | | 3 | | | | | | | |
| | | 2 | | | | | | | |
| | | 1 | | | | | | | |
| | | 0 | | | | | | | |
| 0e02cc | PBX dial tone ON time min. value | 7 | PBX dial tone ON time min. value (unit: 20ms, HEX) | - | 0x00 | 0x00 | 0x00 | XB | 1C |
| | | 6 | | | | | | | |
| | | 5 | | | | | | | |
| | | 4 | | | | | | | |
| | | 3 | | | | | | | |
| | | 2 | | | | | | | |
| | | 1 | | | | | | | |
| | | 0 | | | | | | | |
| 0e02cd | PBX dial tone OFF time max. value | 7 | PBX dial tone OFF time max. value (unit: 20 ms, HEX) | - | 0x00 | 0x00 | 0x00 | XB | 1D |
| | | 6 | | | | | | | |
| | | 5 | | | | | | | |
| | | 4 | | | | | | | |
| | | 3 | | | | | | | |
| | | 2 | | | | | | | |
| | | 1 | | | | | | | |
| | | 0 | | | | | | | |
| 0e02ce | PBX dial tone OFF time min. value | 7 | PBX dial tone OFF time min. value (unit: 20 ms, HEX) | - | 0x00 | 0x00 | 0x00 | XB | 1E |
| | | 6 | | | | | | | |
| | | 5 | | | | | | | |
| | | 4 | | | | | | | |
| | | 3 | | | | | | | |
| | | 2 | | | | | | | |
| | | 1 | | | | | | | |
| | | 0 | | | | | | | |
| 0e02cf | PBX dial tone waiting time | 7 | PBX dial tone waiting time or pre-pause time (unit: 1 sec, HEX) | - | 0x03 | 0x03 | 0x03 | XB | 1F |
| | | 6 | | | | | | | |
| | | 5 | | | | | | | |
| | | 4 | | | | | | | |
| | | 3 | | | | | | | |
| | | 2 | | | | | | | |
| | | 1 | | | | | | | |
| | | 0 | | | | | | | |

### 5.27.3 0e02d#

| Address | Items | Bit No | Contents | Setting | Default | | | CSRC | |
|---|---|---|---|---|---|---|---|---|---|
| | | | | | Japan | North America | Europe | Command | Parameter |
| 0e02d0 | PBX dial tone instantaneous break detection time | 7 | Instantaneous shutdown time (unit: 20 ms, HEX) or tone detection frequency (times, HEX) | - | 0x00 | 0x00 | 0x00 | XB | 20 |
| | | 6 | | | | | | | |
| | | 5 | | | | | | | |
| | | 4 | | | | | | | |
| | | 3 | | | | | | | |
| | | 2 | | | | | | | |
| | | 1 | | | | | | | |
| | | 0 | | | | | | | |

| Address | Items | Bit No | Contents | Setting | Default | | | CSRC | |
|---|---|---|---|---|---|---|---|---|---|
| | | | | | Japan | North America | Europe | Command | Parameter |
| 0e02d1 | 1st dial tone detection frequency pattern | 7 | | - | 0x08 | 0x35 | 0x13 | XB | 21 |
| | | 6 | Tone type<br>0: Single<br>1: Dual | | | | | | |
| | | 5 | | | | | | | |
| | | 4 | 1st dial tone detection frequency pattern<br>1: 155 ±65 Hz<br>2: 375 ±125 Hz<br>3: 400 ±90 Hz<br>4: 400 ±100 Hz<br>5: 420 ±90 Hz<br>6: 425 ±75 Hz<br>7: 425 ±95 Hz<br>8: 425 ±125 Hz<br>9: 430 ±90 Hz<br>10: 435 ±85 Hz<br>11: 440 ±90 Hz<br>12: 445 ±125 Hz<br>13: 450 ±50 Hz<br>14: 450 ±70 Hz<br>15: 450 ±100 Hz<br>16: 450 ±120 Hz<br>17: 460 ±140 Hz<br>18: 465 ±205 Hz<br>19: 475 ±175 Hz<br>20: 480 ±90 Hz<br>21: 480 ±190 Hz<br>22: 1155 ±25 Hz | | | | | |
| | | 3 | | | | | | | |
| | | 2 | | | | | | | |
| | | 1 | | | | | | | |
| | | 0 | | | | | | | |
| 0e02d2 | 1st dial tone detection time | 7 | 1st dial tone detection time or ON time max. value (unit: 20 ms, HEX) | - | 0x32 | 0x32 | 0x1a | XB | 22 |
| | | 6 | | | | | | | |
| | | 5 | | | | | | | |
| | | 4 | | | | | | | |
| | | 3 | | | | | | | |
| | | 2 | | | | | | | |
| | | 1 | | | | | | | |
| | | 0 | | | | | | | |
| 0e02d3 | 1st dial tone ON time min. value | 7 | 1st dial tone ON time min. value (unit: 20 ms, HEX) | - | 0x00 | 0x00 | 0x00 | XB | 23 |
| | | 6 | | | | | | | |
| | | 5 | | | | | | | |
| | | 4 | | | | | | | |
| | | 3 | | | | | | | |
| | | 2 | | | | | | | |
| | | 1 | | | | | | | |
| | | 0 | | | | | | | |
| 0e02d4 | 1st dial tone OFF time max. value | 7 | 1st dial tone OFF time max. value (unit: 20 ms, HEX) | - | 0x00 | 0x00 | 0x00 | XB | 24 |
| | | 6 | | | | | | | |
| | | 5 | | | | | | | |
| | | 4 | | | | | | | |
| | | 3 | | | | | | | |
| | | 2 | | | | | | | |
| | | 1 | | | | | | | |
| | | 0 | | | | | | | |
| 0e02d5 | 1st dial tone OFF time min. value | 7 | 1st dial tone OFF time min. value (unit: 20 ms, HEX) | - | 0x00 | 0x00 | 0x00 | XB | 25 |
| | | 6 | | | | | | | |
| | | 5 | | | | | | | |
| | | 4 | | | | | | | |
| | | 3 | | | | | | | |
| | | 2 | | | | | | | |
| | | 1 | | | | | | | |
| | | 0 | | | | | | | |

| Address | Items | Bit No | Contents | Setting | Default | | | CSRC | |
|---|---|---|---|---|---|---|---|---|---|
| | | | | | Japan | North America | Europe | Command | Parameter |
| 0e02d6 | 1st dial tone waiting time | 7 | 1st dial tone waiting time or pre-pause time (unit: 1 sec, HEX) | - | 0x03 | 0x03 | 0x04 | XB | 26 |
| | | 6 | | | | | | | |
| | | 5 | | | | | | | |
| | | 4 | | | | | | | |
| | | 3 | | | | | | | |
| | | 2 | | | | | | | |
| | | 1 | | | | | | | |
| | | 0 | | | | | | | |
| 0e02d7 | 1st dial tone instantaneous break detection time | 7 | Instantaneous shutdown time (unit: 20 ms, HEX) or tone detection frequency (times, HEX) | - | 0x00 | 0x00 | 0x05 | XB | 27 |
| | | 6 | | | | | | | |
| | | 5 | | | | | | | |
| | | 4 | | | | | | | |
| | | 3 | | | | | | | |
| | | 2 | | | | | | | |
| | | 1 | | | | | | | |
| | | 0 | | | | | | | |
| 0e02d8 | 2nd dial tone detection pattern | 7 | | - | 0x08 | 0x00 | 0x00 | XB | 28 |
| | | 6 | Tone type<br>0: Single<br>1: Dual | | | | | | |
| | | 5 | | | | | | | |
| | | 4 | 2nd dial tone detection pattern<br>1: 155 ±65 Hz<br>2: 375 ±125 Hz<br>3: 400 ±90 Hz<br>4: 400 ±100 Hz<br>5: 420 ±90 Hz<br>6: 425 ±75 Hz<br>7: 425 ±95 Hz<br>8: 425 ±125 Hz<br>9: 430 ±90 Hz<br>10: 435 ±85 Hz<br>11: 440 ±90 Hz<br>12: 445 ±125 Hz<br>13: 450 ±50 Hz<br>14: 450 ±70 Hz<br>15: 450 ±100 Hz<br>16: 450 ±120 Hz<br>17: 460 ±140 Hz<br>18: 465 ±205 Hz<br>19: 475 ±175 Hz<br>20: 480 ±90 Hz<br>21: 480 ±190 Hz<br>22: 1155 ±25 Hz | | | | | |
| | | 3 | | | | | | | |
| | | 2 | | | | | | | |
| | | 1 | | | | | | | |
| | | 0 | | | | | | | |
| 0e02d9 | 2nd dial tone detection time | 7 | 2nd dial tone detection time or ON time max. value (unit: 20 ms, HEX) | - | 0x08 | 0x00 | 0x00 | XB | 29 |
| | | 6 | | | | | | | |
| | | 5 | | | | | | | |
| | | 4 | | | | | | | |
| | | 3 | | | | | | | |
| | | 2 | | | | | | | |
| | | 1 | | | | | | | |
| | | 0 | | | | | | | |
| 0e02da | 2nd dial tone ON time min. value | 7 | 2nd dial tone ON time min. value (unit: 20 ms, HEX) | - | 0x02 | 0x00 | 0x00 | XB | 2A |
| | | 6 | | | | | | | |
| | | 5 | | | | | | | |
| | | 4 | | | | | | | |
| | | 3 | | | | | | | |
| | | 2 | | | | | | | |
| | | 1 | | | | | | | |
| | | 0 | | | | | | | |
| 0e02db | 2nd dial tone OFF time max. value | 7 | 2nd dial tone OFF time max. value (unit: 20 ms, HEX) | - | 0x0a | 0x00 | 0x00 | XB | 2B |

| Address | Items | Bit No | Contents | Setting | Default | | | CSRC | |
|---|---|---|---|---|---|---|---|---|---|
| | | | | | Japan | North America | Europe | Command | Parameter |
| | | 6 | | | | | | | |
| | | 5 | | | | | | | |
| | | 4 | | | | | | | |
| | | 3 | | | | | | | |
| | | 2 | | | | | | | |
| | | 1 | | | | | | | |
| | | 0 | | | | | | | |
| 0e02dc | 2nd dial tone OFF time min. value | 7 | 2nd dial tone OFF time min. value (unit: 20 ms, HEX) | - | 0x04 | 0x00 | 0x00 | XB | 2C |
| | | 6 | | | | | | | |
| | | 5 | | | | | | | |
| | | 4 | | | | | | | |
| | | 3 | | | | | | | |
| | | 2 | | | | | | | |
| | | 1 | | | | | | | |
| | | 0 | | | | | | | |
| 0e02dc | 2nd dial tone waiting time | 7 | 2nd dial tone waiting time or pre-pause time (unit: 1 sec, HEX) | - | 0x03 | 0x03 | 0x03 | XB | 2D |
| | | 6 | | | | | | | |
| | | 5 | | | | | | | |
| | | 4 | | | | | | | |
| | | 3 | | | | | | | |
| | | 2 | | | | | | | |
| | | 1 | | | | | | | |
| | | 0 | | | | | | | |
| 0e02de | 2nd dial tone instantaneous break detection time | 7 | Instantaneous shutdown detection time (unit: 20 ms, HEX) or tone detection frequency (times, HEX) | - | 0x03 | 0x00 | 0x00 | XB | 2E |
| | | 6 | | | | | | | |
| | | 5 | | | | | | | |
| | | 4 | | | | | | | |
| | | 3 | | | | | | | |
| | | 2 | | | | | | | |
| | | 1 | | | | | | | |
| | | 0 | | | | | | | |
| 0e02df | 3rd dial tone detection pattern | 7 | | - | 0x00 | 0x00 | 0x00 | XB | 2F |
| | | 6 | Tone type<br>0: Single<br>1: Dual | | | | | | |
| | | 5 | | | | | | | |
| | | 4 | 3 RD dial tone detection pattern<br>1: 155 ±65 Hz<br>2: 375 ±125 Hz<br>3: 400 ±90 Hz<br>4: 400 ±100 Hz<br>5: 420 ±90 Hz<br>6: 425 ±75 Hz<br>7: 425 ±95 Hz<br>8: 425 ±125 Hz<br>9: 430 ±90 Hz<br>10: 435 ±85 Hz<br>11: 440 ±90 Hz<br>12: 445 ±125 Hz<br>13: 450 ±50 Hz<br>14: 450 ±70 Hz<br>15: 450 ±100 Hz<br>16: 450 ±120 Hz<br>17: 460 ±140 Hz<br>18: 465 ±205 Hz<br>19: 475 ±175 Hz<br>20: 480 ±90 Hz<br>21: 480 ±190 Hz<br>22: 1155 ±25 Hz | | | | | |
| | | 3 | | | | | | | |
| | | 2 | | | | | | | |
| | | 1 | | | | | | | |
| | | 0 | | | | | | | |

### 5.27.4 0e02e#

| Address | Items | Bit No | Contents | Setting | Default | | | CSRC | |
|---|---|---|---|---|---|---|---|---|---|
| | | | | | Japan | North America | Europe | Command | Parameter |
| 0e02e0 | Busy dial tone detection pattern | 7 | | - | 0x08 | 0x55 | 0x09 | XB | 30 |
| | | 6 | Tone type<br>0: Single<br>1: Dual | | | | | | |
| | | 5 | | | | | | | |
| | | 4 | Busy dial tone detection pattern<br>1: 155 ±65 Hz<br>2: 375 ±125 Hz<br>3: 400 ±90 Hz<br>4: 400 ±100 Hz<br>5: 420 ±90 Hz<br>6: 425 ±75 Hz<br>7: 425 ±95 Hz<br>8: 425 ±125 Hz<br>9: 430 ±90 Hz<br>10: 435 ±85 Hz<br>11: 440 ±90 Hz<br>12: 445 ±125 Hz<br>13: 450 ±50 Hz<br>14: 450 ±70 Hz<br>15: 450 ±100 Hz<br>16: 450 ±120 Hz<br>17: 460 ±140 Hz<br>18: 465 ±205 Hz<br>19: 475 ±175 Hz<br>20: 480 ±90 Hz<br>21: 480 ±190 Hz<br>22: 1155 ±25 Hz | | | | | |
| | | 3 | | | | | | | |
| | | 2 | | | | | | | |
| | | 1 | | | | | | | |
| | | 0 | | | | | | | |
| 0e02e1 | Busy tone ON time max. value | 7 | Busy tone ON time max. value (unit: 20 ms, HEX) | - | 0x1e | 0x1e | 0x00 | XB | 31 |
| | | 6 | | | | | | | |
| | | 5 | | | | | | | |
| | | 4 | | | | | | | |
| | | 3 | | | | | | | |
| | | 2 | | | | | | | |
| | | 1 | | | | | | | |
| | | 0 | | | | | | | |
| 0e02e2 | Busy tone ON time min. value | 7 | Busy tone ON time min. value (unit: 20 ms, HEX) | - | 0x14 | 0x14 | 0x00 | XB | 32 |
| | | 6 | | | | | | | |
| | | 5 | | | | | | | |
| | | 4 | | | | | | | |
| | | 3 | | | | | | | |
| | | 2 | | | | | | | |
| | | 1 | | | | | | | |
| | | 0 | | | | | | | |
| 0e02e3 | Busy tone OFF time max. value | 7 | Busy tone OFF time max. value (unit: 20 ms, HEX) | - | 0x1e | 0x1e | 0x00 | XB | 33 |
| | | 6 | | | | | | | |
| | | 5 | | | | | | | |
| | | 4 | | | | | | | |
| | | 3 | | | | | | | |
| | | 2 | | | | | | | |
| | | 1 | | | | | | | |
| | | 0 | | | | | | | |
| 0e02e4 | Busy tone OFF time min. value | 7 | Busy tone OFF time min. value (unit: 20 ms, HEX) | - | 0x14 | 0x14 | 0x00 | XB | 34 |
| | | 6 | | | | | | | |
| | | 5 | | | | | | | |
| | | 4 | | | | | | | |
| | | 3 | | | | | | | |
| | | 2 | | | | | | | |
| | | 1 | | | | | | | |
| | | 0 | | | | | | | |

| Address | Items | Bit No | Contents | Setting | Default | | | CSRC | |
|---|---|---|---|---|---|---|---|---|---|
| | | | | | Japan | North America | Europe | Command | Parameter |
| 0e02e5 | Ringer detection pattern | 7 | Custom mode<br>0: OFF (in accordance with bits 3-0)<br>1: ON (in accordance with bits 5-4) | - | 0x00 | 0x00 | 0x00 | XB | 35 |
| | | 6 | | | | | | | |
| | | 5 | Custom mode ringer detection pattern<br>00: Single<br>01: Double<br>10: Triple<br>*The standard time is configured with DRPD_Custom[].<br>Configure commonly with DRPD_1st[] through 3rd[] to adjust the detection time. | | | | | | |
| | | 4 | | | | | | | |
| | | 3 | Ringer detection pattern<br>0000: Nomal<br>0001: DRPD_Single<br>0010: DRPD_Double<br>0011: DRPD_Triple1<br>0100: DRPD_Triple2<br>0101: DRPD_NZDA1<br>0110: DRPD_NZDA2<br>0111: DRPD_NZDA3<br>1000: DRPD_NZDA4<br>1001: DRPD_Duet<br>*Normal conforms to Ringer[2] through [5] as usual.<br>*For DRPD, configure the margin time (min, max) from the standard time*1. | | | | | | |
| | | 2 | | | | | | | |
| | | 1 | | | | | | | |
| | | 0 | | | | | | | |
| 0e02e6 | Ringer detection frequency upper limits | 7 | Ringer detection frequency upper limit (unit: 1 Hz, HEX) | - | 0x46 | 0x46 | 0x46 | XB | 36 |
| | | 6 | | | | | | | |
| | | 5 | | | | | | | |
| | | 4 | | | | | | | |
| | | 3 | | | | | | | |
| | | 2 | | | | | | | |
| | | 1 | | | | | | | |
| | | 0 | | | | | | | |
| 0e02e7 | Ringer detection frequency lower limits | 7 | Ringer detection frequency lower limit (unit: 1 Hz, HEX) | - | 0x0c | 0x0c | 0x0c | XB | 37 |
| | | 6 | | | | | | | |
| | | 5 | | | | | | | |
| | | 4 | | | | | | | |
| | | 3 | | | | | | | |
| | | 2 | | | | | | | |
| | | 1 | | | | | | | |
| | | 0 | | | | | | | |
| 0e02e8 | Ringer ON time max. value | 7 | Ringer ON time max. value (unit: 20 ms, HEX) | - | 0x00 | 0x00 | 0x00 | XB | 38 |
| | | 6 | | | | | | | |
| | | 5 | | | | | | | |
| | | 4 | | | | | | | |
| | | 3 | | | | | | | |
| | | 2 | | | | | | | |
| | | 1 | | | | | | | |
| | | 0 | | | | | | | |
| 0e02e9 | Ringer ON time min. value | 7 | Ringer ON time min. value (unit: 20 ms, HEX) | - | 0x0a | 0x0a | 0x08 | XB | 39 |
| | | 6 | | | | | | | |
| | | 5 | | | | | | | |
| | | 4 | | | | | | | |
| | | 3 | | | | | | | |
| | | 2 | | | | | | | |

| Address | Items | Bit No | Contents | Setting | Default | | | CSRC | |
|---|---|---|---|---|---|---|---|---|---|
| | | | | | Japan | North America | Europe | Command | Parameter |
| | | 1 | | | | | | | |
| | | 0 | | | | | | | |
| 0e02ea | Ringer OFF time max. value | 7 | Ringer OFF time max. value (unit: 100 ms, HEX) | - | 0x3c | 0x3c | 0x46 | XB | 3A |
| | | 6 | | | | | | | |
| | | 5 | | | | | | | |
| | | 4 | | | | | | | |
| | | 3 | | | | | | | |
| | | 2 | | | | | | | |
| | | 1 | | | | | | | |
| | | 0 | | | | | | | |
| 0e02eb | Ringer OFF time min. value | 7 | Ringer OFF time min. value (unit: 100 ms, HEX) | Utility Mode Special Setting | 0x02 | 0x00 | 0x00 | XB | 3B |
| | | 6 | | | | | | | |
| | | 5 | | | | | | | |
| | | 4 | | | | | | | |
| | | 3 | | | | | | | |
| | | 2 | | | | | | | |
| | | 1 | | | | | | | |
| | | 0 | | | | | | | |
| 0e02ec | DRPD Ringer ON time max. value | 7 | DRPD Ringer ON time max. value (unit: 20 ms, HEX) | - | 0x09 | 0x09 | 0x09 | XB | 3C |
| | | 6 | | | | | | | |
| | | 5 | | | | | | | |
| | | 4 | | | | | | | |
| | | 3 | | | | | | | |
| | | 2 | | | | | | | |
| | | 1 | | | | | | | |
| | | 0 | | | | | | | |
| 0e02ed | DRPD ringer ON time min. value | 7 | DRPD ringer ON time min. value (in 20-ms increments, HEX) | - | 0x09 | 0x09 | 0x09 | XB | 3D |
| | | 6 | | | | | | | |
| | | 5 | | | | | | | |
| | | 4 | | | | | | | |
| | | 3 | | | | | | | |
| | | 2 | | | | | | | |
| | | 1 | | | | | | | |
| | | 0 | | | | | | | |
| 0e02ee | DRPD ringer OFF time max. value | 7 | DRPD ringer OFF time max. value (in 20-ms increments, HEX) | - | 0x09 | 0x09 | 0x09 | XB | 3E |
| | | 6 | | | | | | | |
| | | 5 | | | | | | | |
| | | 4 | | | | | | | |
| | | 3 | | | | | | | |
| | | 2 | | | | | | | |
| | | 1 | | | | | | | |
| | | 0 | | | | | | | |
| 0e02ef | DRPD ringer OFF time min. value | 7 | DRPD ringer OFF time min. value (in 20-ms increments, HEX) | - | 0x09 | 0x09 | 0x09 | XB | 3F |
| | | 6 | | | | | | | |
| | | 5 | | | | | | | |
| | | 4 | | | | | | | |
| | | 3 | | | | | | | |
| | | 2 | | | | | | | |
| | | 1 | | | | | | | |
| | | 0 | | | | | | | |

- *1: DRPD standard time

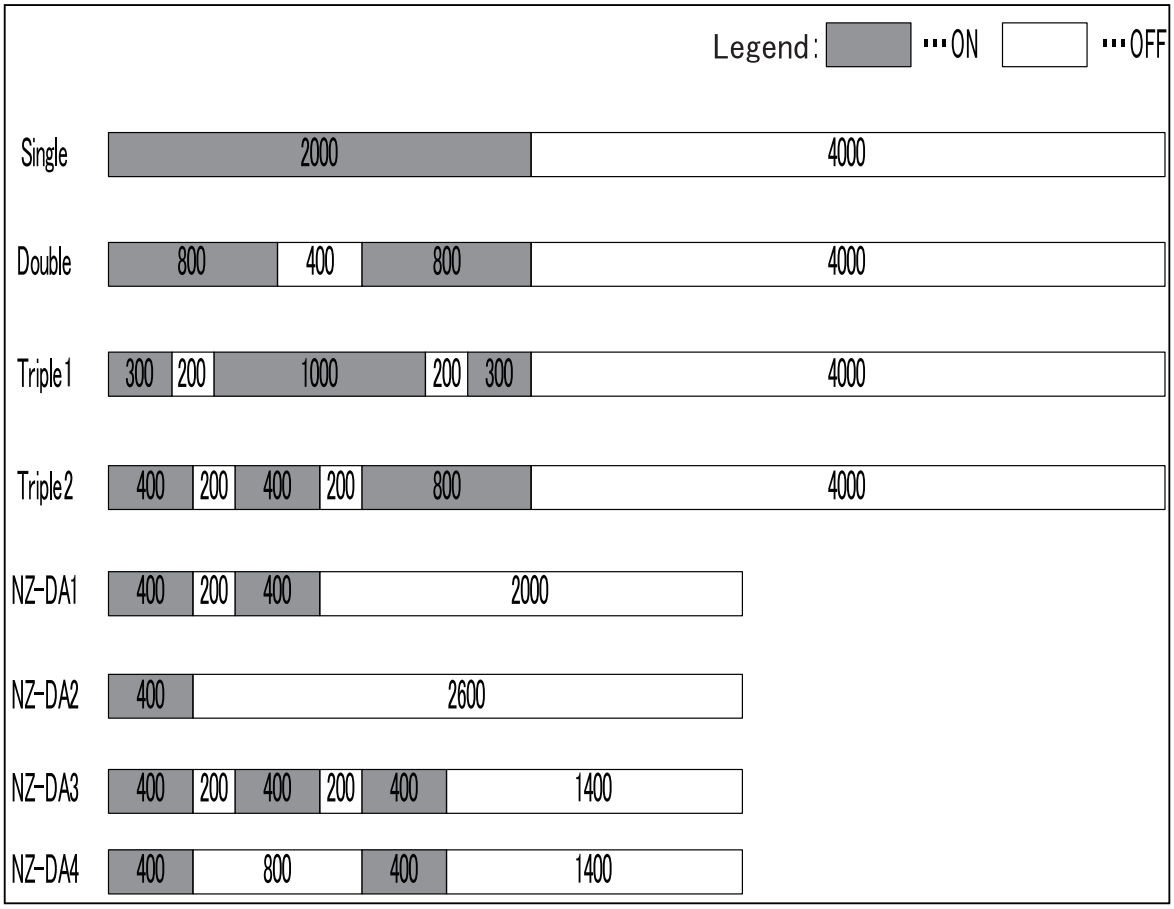


### 5.27.5 0e02f#

| Address | Items | Bit No | Contents | Setting | Default | | | CSRC | |
|---|---|---|---|---|---|---|---|---|---|
| | | | | | Japan | North America | Europe | Command | Parameter |
| 0e02f0 | DRPD max. adjustment value for max. OFF time | 7 | DRPD max. adjustment value for max. OFF time (100-ms increments, HEX) | - | 0x05 | 0x05 | 0x05 | XB | 40 |
| | | 6 | | | | | | | |
| | | 5 | | | | | | | |
| | | 4 | | | | | | | |
| | | 3 | | | | | | | |
| | | 2 | | | | | | | |
| | | 1 | | | | | | | |
| | | 0 | | | | | | | |
| 0e02f1 | DRPD min. adjustment value for max. OFF time | 7 | DRPD ringer min. adjustment value for max. OFF time (100-ms increments, HEX) | - | 0x05 | 0x05 | 0x05 | XB | 41 |
| | | 6 | | | | | | | |
| | | 5 | | | | | | | |
| | | 4 | | | | | | | |
| | | 3 | | | | | | | |
| | | 2 | | | | | | | |
| | | 1 | | | | | | | |
| | | 0 | | | | | | | |
| 0e02f2 | DRPD single ring stop detection time | 7 | DRPD single ring stop detection time (100-ms increments, HEX) | - | 0x50 | 0x50 | 0x50 | XB | 42 |
| | | 6 | | | | | | | |
| | | 5 | | | | | | | |
| | | 4 | | | | | | | |
| | | 3 | | | | | | | |
| | | 2 | | | | | | | |
| | | 1 | | | | | | | |
| | | 0 | | | | | | | |
| 0e02f3 | DRPD double ring stop detection time | 7 | DRPD double ring stop detection time (100-ms increments, HEX) | - | 0x50 | 0x50 | 0x50 | XB | 43 |
| | | 6 | | | | | | | |
| | | 5 | | | | | | | |

| Address | Items | Bit No | Contents | Setting | Default | | | CSRC | |
|---|---|---|---|---|---|---|---|---|---|
| | | | | | Japan | North America | Europe | Command | Parameter |
| | | 4 | | | | | | | |
| | | 3 | | | | | | | |
| | | 2 | | | | | | | |
| | | 1 | | | | | | | |
| | | 0 | | | | | | | |
| 0e02f4 | DRPD Triple1 ring stop detection time | 7 | DRPD Triple1 ring stop detection time (100-ms increments, HEX) | - | 0x50 | 0x50 | 0x50 | XB | 44 |
| | | 6 | | | | | | | |
| | | 5 | | | | | | | |
| | | 4 | | | | | | | |
| | | 3 | | | | | | | |
| | | 2 | | | | | | | |
| | | 1 | | | | | | | |
| | | 0 | | | | | | | |
| 0e02f5 | DRPD Triple2 ring stop detection time | 7 | DRPD Triple2 ring stop detection time (100-ms increments, HEX) | - | 0x50 | 0x50 | 0x50 | XB | 45 |
| | | 6 | | | | | | | |
| | | 5 | | | | | | | |
| | | 4 | | | | | | | |
| | | 3 | | | | | | | |
| | | 2 | | | | | | | |
| | | 1 | | | | | | | |
| | | 0 | | | | | | | |
| 0e02f6 | DRPD NZ-DA1 ring stop detection time | 7 | DRPD NZ-DA1 ring stop detection time (100-ms increments, HEX) | - | 0x3C | 0x3C | 0x3C | XB | 46 |
| | | 6 | | | | | | | |
| | | 5 | | | | | | | |
| | | 4 | | | | | | | |
| | | 3 | | | | | | | |
| | | 2 | | | | | | | |
| | | 1 | | | | | | | |
| | | 0 | | | | | | | |
| 0e02f7 | DRPD NZ-DA2 ring stop detection time | 7 | DRPD NZ-DA2 ring stop detection time (100-ms increments, HEX) | - | 0x3C | 0x3C | 0x3C | XB | 47 |
| | | 6 | | | | | | | |
| | | 5 | | | | | | | |
| | | 4 | | | | | | | |
| | | 3 | | | | | | | |
| | | 2 | | | | | | | |
| | | 1 | | | | | | | |
| | | 0 | | | | | | | |
| 0e02f8 | DRPD NZ-DA3 ring stop detection time | 7 | DRPD NZ-DA3 ring stop detection time (100-ms increments, HEX) | - | 0x32 | 0x32 | 0x32 | XB | 48 |
| | | 6 | | | | | | | |
| | | 5 | | | | | | | |
| | | 4 | | | | | | | |
| | | 3 | | | | | | | |
| | | 2 | | | | | | | |
| | | 1 | | | | | | | |
| | | 0 | | | | | | | |
| 0e02f9 | DRPD NZ-DA4 ring stop detection time | 7 | DRPD NZ-DA4 ring stop detection time (100-ms increments, HEX) | - | 0x32 | 0x32 | 0x32 | XB | 49 |
| | | 6 | | | | | | | |
| | | 5 | | | | | | | |
| | | 4 | | | | | | | |
| | | 3 | | | | | | | |
| | | 2 | | | | | | | |
| | | 1 | | | | | | | |
| | | 0 | | | | | | | |
| 0e02fa | Custom 1s ringer ON time specified value | 7 | Custom 1st ringer ON time specified value (100-ms increments, HEX) | - | 0x00 | 0x00 | 0x00 | XB | 4A |
| | | 6 | | | | | | | |

| Address | Items | Bit No | Contents | Setting | Default | | | CSRC | |
|---|---|---|---|---|---|---|---|---|---|
| | | | | | Japan | North America | Europe | Command | Parameter |
| | | 5 | | | | | | | |
| | | 4 | | | | | | | |
| | | 3 | | | | | | | |
| | | 2 | | | | | | | |
| | | 1 | | | | | | | |
| | | 0 | | | | | | | |
| 0e02fb | Custom 1st ringer OFF time specified value | 7 | Custom 1st ringer OFF time specified value (100-ms increments, HEX) | - | 0x00 | 0x00 | 0x00 | XB | 4B |
| | | 6 | | | | | | | |
| | | 5 | | | | | | | |
| | | 4 | | | | | | | |
| | | 3 | | | | | | | |
| | | 2 | | | | | | | |
| | | 1 | | | | | | | |
| | | 0 | | | | | | | |
| 0e02fc | Custom 2nd ringer ON time specified value | 7 | Custom 2nd ringer ON time specified value (100-ms increments, HEX) | - | 0x00 | 0x00 | 0x00 | XB | 4C |
| | | 6 | | | | | | | |
| | | 5 | | | | | | | |
| | | 4 | | | | | | | |
| | | 3 | | | | | | | |
| | | 2 | | | | | | | |
| | | 1 | | | | | | | |
| | | 0 | | | | | | | |
| 0e02fd | Custom 2nd ringer OFF time specified value | 7 | Custom 2nd ringer OFF time specified value (100-ms increments, HEX) | - | 0x00 | 0x00 | 0x00 | XB | 4D |
| | | 6 | | | | | | | |
| | | 5 | | | | | | | |
| | | 4 | | | | | | | |
| | | 3 | | | | | | | |
| | | 2 | | | | | | | |
| | | 1 | | | | | | | |
| | | 0 | | | | | | | |
| 0e02fe | Custom 3rd ringer ON time specified value | 7 | Custom 3rd ringer ON time specified value (100-ms increments, HEX) | - | 0x00 | 0x00 | 0x00 | XB | 4E |
| | | 6 | | | | | | | |
| | | 5 | | | | | | | |
| | | 4 | | | | | | | |
| | | 3 | | | | | | | |
| | | 2 | | | | | | | |
| | | 1 | | | | | | | |
| | | 0 | | | | | | | |
| 0e02ff | Custom 3rd ringer OFF time specified value | 7 | Custom 3rd ringer OFF time specified value (100-ms increments, HEX) | - | 0x00 | 0x00 | 0x00 | XB | 4F |
| | | 6 | | | | | | | |
| | | 5 | | | | | | | |
| | | 4 | | | | | | | |
| | | 3 | | | | | | | |
| | | 2 | | | | | | | |
| | | 1 | | | | | | | |
| | | 0 | | | | | | | |

### 5.27.6 0e030#

| Address | Items | Bit No | Contents | Setting | Default | | | CSRC | |
|---|---|---|---|---|---|---|---|---|---|
| | | | | | Japan | North America | Europe | Command | Parameter |
| 0e0300 | Custom Ring OFF detection time | 7 | Custom Ring OFF detection time (in 100-ms increments, HEX) | - | 0x00 | 0x00 | 0x00 | XB | 50 |
| | | 6 | | | | | | | |
| | | 5 | | | | | | | |
| | | 4 | | | | | | | |

| Address | Items | Bit No | Contents | Setting | Default | | | CSRC | |
|---|---|---|---|---|---|---|---|---|---|
| | | | | | Japan | North America | Europe | Command | Parameter |
| | | 3 | | | | | | | |
| | | 2 | | | | | | | |
| | | 1 | | | | | | | |
| | | 0 | | | | | | | |
| 0e0301 | PB dial signal transmission time | 7 | PB dial signal transmission time (unit: 5 ms, HEX) | - | 0x15 | 0x19 | 0x15 | XB | 51 |
| | | 6 | | | | | | | |
| | | 5 | | | | | | | |
| | | 4 | | | | | | | |
| | | 3 | | | | | | | |
| | | 2 | | | | | | | |
| | | 1 | | | | | | | |
| | | 0 | | | | | | | |
| 0e0302 | PB dial inter-digit pause | 7 | PB dial inter digit pause time (unit: 5 ms, HEX) | - | 0x11 | 0x15 | 0x11 | XB | 52 |
| | | 6 | | | | | | | |
| | | 5 | | | | | | | |
| | | 4 | | | | | | | |
| | | 3 | | | | | | | |
| | | 2 | | | | | | | |
| | | 1 | | | | | | | |
| | | 0 | | | | | | | |
| 0e0303 | 10 pps pulse dial time | 7 | 10 pps pulse dial time | - | 0x0F | 0x12 | 0x12 | XB | 53 |
| | | 6 | | | | | | | |
| | | 5 | | | | | | | |
| | | 4 | | | | | | | |
| | | 3 | | | | | | | |
| | | 2 | | | | | | | |
| | | 1 | | | | | | | |
| | | 0 | | | | | | | |
| 0e0304 | 10 pps pulse dial break time | 7 | 10 pps pulse dial break time | - | 0x1F | 0x1C | 0x1C | XB | 54 |
| | | 6 | | | | | | | |
| | | 5 | | | | | | | |
| | | 4 | | | | | | | |
| | | 3 | | | | | | | |
| | | 2 | | | | | | | |
| | | 1 | | | | | | | |
| | | 0 | | | | | | | |
| 0e0305 | 10 pps pulse dial inter-digit pause | 7 | 10 pps pulse dial inter digit pause (unit: 10 ms, HEX) | - | 0x68 | 0x68 | 0x5e | XB | 55 |
| | | 6 | | | | | | | |
| | | 5 | | | | | | | |
| | | 4 | | | | | | | |
| | | 3 | | | | | | | |
| | | 2 | | | | | | | |
| | | 1 | | | | | | | |
| | | 0 | | | | | | | |
| 0e0306 | 20 pps pulse dial time | 7 | 20 pps pulse dial time | - | 0x07 | 0x09 | 0x09 | XB | 56 |
| | | 6 | | | | | | | |
| | | 5 | | | | | | | |
| | | 4 | | | | | | | |
| | | 3 | | | | | | | |
| | | 2 | | | | | | | |
| | | 1 | | | | | | | |
| | | 0 | | | | | | | |
| 0e0307 | 20 pps pulse dial break time | 7 | 20 pps pulse dial break time | - | 0x10 | 0x0E | 0x0E | XB | 57 |
| | | 6 | | | | | | | |
| | | 5 | | | | | | | |

| Address | Items | Bit No | Contents | Setting | Default | | | CSRC | |
|---|---|---|---|---|---|---|---|---|---|
| | | | | | Japan | North America | Europe | Command | Parameter |
| | | 4 | | | | | | | |
| | | 3 | | | | | | | |
| | | 2 | | | | | | | |
| | | 1 | | | | | | | |
| | | 0 | | | | | | | |
| 0e0308 | 20 pps pulse dial inter-digit pause | 7 | 20 pps pulse dial inter digit pause (unit: 10 ms, HEX) | - | 0x59 | 0x40 | 0x5c | XB | 58 |
| | | 6 | | | | | | | |
| | | 5 | | | | | | | |
| | | 4 | | | | | | | |
| | | 3 | | | | | | | |
| | | 2 | | | | | | | |
| | | 1 | | | | | | | |
| | | 0 | | | | | | | |
| 0e0309 | PB signal transmission level | 7 | PB signal transmission level (unit: 1 dBm, HEX) | Utility Mode Special Setting | 0x0a | 0x0a | 0x06 | XB | 59 |
| | | 6 | | | | | | | |
| | | 5 | | | | | | | |
| | | 4 | | | | | | | |
| | | 3 | | | | | | | |
| | | 2 | | | | | | | |
| | | 1 | | | | | | | |
| | | 0 | | | | | | | |
| 0e030a | PB signal level difference (HL) | 7 | PB signal level difference (HL) (unit: 0.5 dBm, HEX) | Utility Mode Special Setting | 0x04 | 0x04 | 0x04 | XB | 5A |
| | | 6 | | | | | | | |
| | | 5 | | | | | | | |
| | | 4 | | | | | | | |
| | | 3 | | | | | | | |
| | | 2 | | | | | | | |
| | | 1 | | | | | | | |
| | | 0 | | | | | | | |
| 0e030b | DCLOOP integration time at CML OFF | 7 | DCLOOP integration time at CML relay OFF (unit: 5 ms, HEX) (Lower limit 20 ms) | - | 0x50 | 0x50 | 0x50 | XB | 5B |
| | | 6 | | | | | | | |
| | | 5 | | | | | | | |
| | | 4 | | | | | | | |
| | | 3 | | | | | | | |
| | | 2 | | | | | | | |
| | | 1 | | | | | | | |
| | | 0 | | | | | | | |
| 0e030c | DCLOOP integration time at CML ON | 7 | DCLOOP integration time at CML relay ON (unit: 5 ms, HEX) (Lower limit 20 ms) | - | 0x10 | 0x10 | 0x10 | XB | 5C |
| | | 6 | | | | | | | |
| | | 5 | | | | | | | |
| | | 4 | | | | | | | |
| | | 3 | | | | | | | |
| | | 2 | | | | | | | |
| | | 1 | | | | | | | |
| | | 0 | | | | | | | |
| 0e030d | Pause time | 7 | | Utility Mode Special Setting (0-2) | 0x01 | 0x01 | 0x01 | XB | 5D |
| | | 6 | | | | | | | |
| | | 5 | | | | | | | |
| | | 4 | | | | | | | |
| | | 3 | | | | | | | |
| | | 2 | Pause time (unit:sec, HEX) | | | | | | |
| | | 1 | | | | | | | |
| | | 0 | | | | | | | |
| 0e030e | DC-LOOP check mode | 7 | DC-LOOP check<br>0: No<br>1: Always | Utility Mode Special Setting (6,7) | 0x00 | 0x00 | 0x00 | XB | 5E |

| Address | Items | Bit No | Contents | Setting | Default | | | CSRC | |
|---|---|---|---|---|---|---|---|---|---|
| | | | | | Japan | North America | Europe | Command | Parameter |
| | | 6 | | | | | | | |
| | | 5 | | | | | | | |
| | | 4 | | | | | | | |
| | | 3 | | | | | | | |
| | | 2 | | | | | | | |
| | | 1 | | | | | | | |
| | | 0 | | | | | | | |
| 0e030f | DC-LOOP waiting time | 7 | DC-LOOP waiting time (unit: 100 ms, HEX) | - | 0x00 | 0x00 | 0x00 | XB | 5F |
| | | 6 | | | | | | | |
| | | 5 | | | | | | | |
| | | 4 | | | | | | | |
| | | 3 | | | | | | | |
| | | 2 | | | | | | | |
| | | 1 | | | | | | | |
| | | 0 | | | | | | | |

### 5.27.7 0e031#

| Address | Items | Bit No | Contents | Setting | Default | | | CSRC | |
|---|---|---|---|---|---|---|---|---|---|
| | | | | | Japan | North America | Europe | Command | Parameter |
| 0e0310 | DC-LOOP instantaneous break allowable time (ph.A) | 7 | DC-LOOP instantaneous break allowable time (unit: 10 ms, HEX) (at the time of calling, CML ON to end of dialing) | - | 0x00 | 0x00 | 0x00 | XB | 60 |
| | | 6 | | | | | | | |
| | | 5 | | | | | | | |
| | | 4 | | | | | | | |
| | | 3 | | | | | | | |
| | | 2 | | | | | | | |
| | | 1 | | | | | | | |
| | | 0 | | | | | | | |
| 0e0311 | DC-LOOP instantaneous break allowable time (ph.B) | 7 | DC-LOOP instantaneous break allowable time (unit: 10ms, HEX) (after completion of dialing and after CML ON at the time of reception) | - | 0x00 | 0x00 | 0x00 | XB | 61 |
| | | 6 | | | | | | | |
| | | 5 | | | | | | | |
| | | 4 | | | | | | | |
| | | 3 | | | | | | | |
| | | 2 | | | | | | | |
| | | 1 | | | | | | | |
| | | 0 | | | | | | | |
| 0e0312 | Dial Mode<br>RING DET mode | 7 | | Utility Mode (0,1)<br>Utility Mode Special Setting (4,5) | 0x12 | 0x10 | 0x10 | XB | 62 |
| | | 6 | | | | | | | |
| | | 5 | RING detection mode<br>01: No. of times<br>10: Time | | | | | | |
| | | 4 | | | | | | | |
| | | 3 | Pulse format<br>00: General<br>01: SW<br>10: NO | | | | | | |
| | | 2 | | | | | | | |
| | | 1 | Dialing method<br>00: PB<br>01: 10pps<br>10: 20pps<br>11: 16pps | | | | | | |
| | | 0 | | | | | | | |
| 0e0313 | 1st/2nd DT detection parameter | 7 | | - | 0x00 | 0x00 | 0x00 | XB | 63 |
| | | 6 | | | | | | | |
| | | 5 | | | | | | | |
| | | 4 | | | | | | | |
| | | 3 | At 2nd DT detection DP dialing only | | | | | | |
| | | 2 | | | | | | | |

| Address | Items | Bit No | Contents | Setting | Default | | | CSRC | |
|---|---|---|---|---|---|---|---|---|---|
| | | | | | Japan | North America | Europe | Command | Parameter |
| | | 1 | | | | | | | |
| | | 0 | 1st DT2 type | | | | | | |
| 0e0314 | Tone detection | 7 | | Utility Mode Special Setting (4,5) | 0x11 | 0x11 | 0x01 | XB | 64 |
| | | 6 | | | | | | | |
| | | 5 | 1300 Hz<br>0: No<br>1: Yes | | | | | | |
| | | 4 | Busy Tone<br>0: No<br>1: Yes | | | | | | |
| | | 3 | PBX DT<br>0: No<br>1: Yes | | | | | | |
| | | 2 | 3rd DT<br>0: No<br>1: Yes | | | | | | |
| | | 1 | 2nd DT<br>0: No<br>1: Yes | | | | | | |
| | | 0 | 1st DT<br>0: No<br>1: Yes | | | | | | |
| 0e0315 | No. of busy tone detection times | 7 | No. of busy tone detection times (HEX) | Utility Mode Special Setting | 0x02 | 0x02 | 0x00 | XB | 65 |
| | | 6 | | | | | | | |
| | | 5 | | | | | | | |
| | | 4 | | | | | | | |
| | | 3 | | | | | | | |
| | | 2 | | | | | | | |
| | | 1 | | | | | | | |
| | | 0 | | | | | | | |
| 0 e0316 | No. of RING detection times | 7 | No. of RING detection times (times, HEX) | Utility Mode | 0x02 | 0x02 | 0x02 | XB | 66 |
| | | 6 | | | | | | | |
| | | 5 | | | | | | | |
| | | 4 | | | | | | | |
| | | 3 | | | | | | | |
| | | 2 | | | | | | | |
| | | 1 | | | | | | | |
| | | 0 | | | | | | | |
| 0e0317 | RING detection time | 7 | Ring detection time (sec, HEX) | Utility Mode Special Setting | 0x06 | 0x06 | 0x06 | XB | 67 |
| | | 6 | | | | | | | |
| | | 5 | | | | | | | |
| | | 4 | | | | | | | |
| | | 3 | | | | | | | |
| | | 2 | | | | | | | |
| | | 1 | | | | | | | |
| | | 0 | | | | | | | |
| 0e0318 | Remote station response waiting time | 7 | Remote station response waiting time at calling (unit:sec, HEX) | Utility Mode Special Setting | 0x37 | 0x37 | 0x37 | XB | 68 |
| | | 6 | | | | | | | |
| | | 5 | | | | | | | |
| | | 4 | | | | | | | |
| | | 3 | | | | | | | |
| | | 2 | | | | | | | |
| | | 1 | | | | | | | |
| | | 0 | | | | | | | |
| 0e0319 | Answering machine function | 7 | Answering machine CNG detection time (unit: 10 sec, HEX) (1-7) | Utility Mode Special Setting (4) | 0x64 | 0x64 | 0x64 | XB | 69 |
| | | 6 | | | | | | | |
| | | 5 | | | | | | | |

| Address | Items | Bit No | Contents | Setting | Default | | | CSRC | |
|---|---|---|---|---|---|---|---|---|---|
| | | | | | Japan | North America | Europe | Command | Parameter |
| | | 4 | Answer mode<br>0: OFF<br>1: ON | | | | | | |
| | | 3 | Answering machine DC-LOOP detection time (unit: 5 sec, HEX) (1-15) | | | | | | |
| | | 2 | | | | | | | |
| | | 1 | | | | | | | |
| | | 0 | | | | | | | |
| 0e031a-0e031b | Remote reception password<br>*Line 1 only available | 7 | ASCII [2] | Utility Mode | 0x2a 0x20 | 0x2a 0x20 | 0x2a 0x20 | XB | 6a-6B |
| | | 6 | | | | | | | |
| | | 5 | | | | | | | |
| | | 4 | | | | | | | |
| | | 3 | | | | | | | |
| | | 2 | | | | | | | |
| | | 1 | | | | | | | |
| | | 0 | | | | | | | |
| 0e031c | RBT transmission time | 7 | RingBackTone signal transmission time (unit: 1000 ms, HEX) | - | 0x14 | 0x14 | 0x14 | XB | 6C |
| | | 6 | | | | | | | |
| | | 5 | | | | | | | |
| | | 4 | | | | | | | |
| | | 3 | | | | | | | |
| | | 2 | | | | | | | |
| | | 1 | | | | | | | |
| | | 0 | | | | | | | |
| 0e031d | CAR signal ON time max. value | 7 | CAR ON time max. value (unit: 20 ms, HEX) | - | 0x28 | 0x00 | 0x00 | XB | 6D |
| | | 6 | | | | | | | |
| | | 5 | | | | | | | |
| | | 4 | | | | | | | |
| | | 3 | | | | | | | |
| | | 2 | | | | | | | |
| | | 1 | | | | | | | |
| | | 0 | | | | | | | |
| 0e031e | CAR signal ON time min. value | 7 | CAR ON time min. value (unit: 20 ms, HEX) | - | 0x0a | 0x00 | 0x00 | XB | 6E |
| | | 6 | | | | | | | |
| | | 5 | | | | | | | |
| | | 4 | | | | | | | |
| | | 3 | | | | | | | |
| | | 2 | | | | | | | |
| | | 1 | | | | | | | |
| | | 0 | | | | | | | |
| 0e031f | CAR signal OFF time max. value | 7 | CAR OFF time max. value (unit: 20 ms, HEX) | - | 0x28 | 0x00 | 0x00 | XB | 6F |
| | | 6 | | | | | | | |
| | | 5 | | | | | | | |
| | | 4 | | | | | | | |
| | | 3 | | | | | | | |
| | | 2 | | | | | | | |
| | | 1 | | | | | | | |
| | | 0 | | | | | | | |

### 5.27.8 0e032#

| Address | Items | Bit No | Contents | Setting | Default | | | CSRC | |
|---|---|---|---|---|---|---|---|---|---|
| | | | | | Japan | North America | Europe | Command | Parameter |
| 0e0320 | CAR signal OFF time min. value | 7 | CAR OFF time min. value (unit: 20 ms, HEX) | - | 0x0a | 0x00 | 0x00 | XB | 70 |
| | | 6 | | | | | | | |
| | | 5 | | | | | | | |

| Address | Items | Bit No | Contents | Setting | Default | | | CSRC | |
|---|---|---|---|---|---|---|---|---|---|
| | | | | | Japan | North America | Europe | Command | Parameter |
| | | 4 | | | | | | | |
| | | 3 | | | | | | | |
| | | 2 | | | | | | | |
| | | 1 | | | | | | | |
| | | 0 | | | | | | | |
| 0e0321 | No. of CAR signal detection times | 7 | CAR (information receiving terminal start signal) detection frequency (times, HEX) | - | 0x01 | 0x00 | 0x00 | XB | 71 |
| | | 6 | | | | | | | |
| | | 5 | | | | | | | |
| | | 4 | | | | | | | |
| | | 3 | | | | | | | |
| | | 2 | | | | | | | |
| | | 1 | | | | | | | |
| | | 0 | | | | | | | |
| 0e0322 | Caller ID signal waiting time | 7 | ID waiting time after Caller ID/ DIAL IN primary response (unit 1000 ms, HEX) | - | 0x05 | 0x00 | 0x00 | XB | 72 |
| | | 6 | | | | | | | |
| | | 5 | | | | | | | |
| | | 4 | | | | | | | |
| | | 3 | | | | | | | |
| | | 2 | | | | | | | |
| | | 1 | | | | | | | |
| | | 0 | | | | | | | |
| 0e0323 | Remote reception password entry waiting time | 7 | Password signal (DTMF) detection waiting time (unit: 100 ms, HEX) | - | 0x14 | 0x14 | 0x14 | XB | 73 |
| | | 6 | | | | | | | |
| | | 5 | | | | | | | |
| | | 4 | | | | | | | |
| | | 3 | | | | | | | |
| | | 2 | | | | | | | |
| | | 1 | | | | | | | |
| | | 0 | | | | | | | |
| 0e0324 | Normal/number display automatic line distinction function | 7 | Automatic judgment function<br>0: OFF<br>1: ON | - | 0x83 | 0x00 | 0x00 | XB | 74 |
| | | 6 | | | | | | | |
| | | 5 | | | | | | | |
| | | 4 | | | | | | | |
| | | 3 | V23 signal detection waiting time when judged (x1 sec, HEX) | | | | | | |
| | | 2 | | | | | | | |
| | | 1 | | | | | | | |
| | | 0 | | | | | | | |
| 0e0325 | Monitor speaker (Transmission signal sound) | 7 | PB tone monitoring at the time of offhook | Utility Mode (0-6) | 0x03 | 0x03 | 0x03 | XB | 75 |
| | | 6 | Monitor speaker in communication<br>00: OFF<br>01: Up to DIS<br>10: Up to DIS + RBT transmissions<br>11: ON | | | | | | |
| | | 5 | | | | | | | |
| | | 4 | Speaker volume (HEX) (0-8) | | | | | | |
| | | 3 | | | | | | | |
| | | 2 | | | | | | | |
| | | 1 | | | | | | | |
| | | 0 | | | | | | | |
| 0e0326 - 0e032f | Numeric ID [20] | 7 | ASCII [20]<br>When ID is less than 20 digits, justify to the left and insert space at the top. (No NULL terminator) | Utility Mode | ALL 0x20 | ALL 0x20 | ALL 0x20 | XB | 76 |
| | | 6 | | | | | | | |
| | | 5 | | | | | | | |
| | | 4 | | | | | | | |
| | | 3 | | | | | | | |

| Address | Items | Bit No | Contents | Setting | Default | | | CSRC | |
|---|---|---|---|---|---|---|---|---|---|
| | | | | | Japan | North America | Europe | Command | Parameter |
| | | 2 | | | | | | | |
| | | 1 | | | | | | | |
| | | 0 | | | | | | | |

### 5.27.9 0e033#

| Address | Items | Bit No | Contents | Setting | Default | | | CSRC | |
|---|---|---|---|---|---|---|---|---|---|
| | | | | | Japan | North America | Europe | Command | Parameter |
| 0e0330 - 0e0339 | Numeric ID [20] | 7 | ASCII [20]<br>When ID is less than 20 digits, justify to the left and insert space at the top. (No NULL terminator) | Utility Mode | ALL 0x20 | ALL 0x20 | ALL 0x20 | XB | 80-89 |
| | | 6 | | | | | | | |
| | | 5 | | | | | | | |
| | | 4 | | | | | | | |
| | | 3 | | | | | | | |
| | | 2 | | | | | | | |
| | | 1 | | | | | | | |
| | | 0 | | | | | | | |
| 0e033a | PBX connection mode | 7 | | Utility Mode (0-3) | 0x0f | 0x0f | 0x0f | XB | 8A |
| | | 6 | | | | | | | |
| | | 5 | | | | | | | |
| | | 4 | | | | | | | |
| | | 3 | PBX call<br>0000 - 1001: keypad<br>1011: Reserved<br>1100: Reserved<br>1101: Reserved<br>1110: Reserved<br>1111: PBX unconnected | | | | | | |
| | | 2 | | | | | | | |
| | | 1 | | | | | | | |
| | | 0 | | | | | | | |
| 0e033b | Protocol monitor | 7 | | Utility Mode (5) | 0x00 | 0x00 | 0x00 | XB | 8B |
| | | 6 | | | | | | | |
| | | 5 | TEL/FAX switching RBT monitor sound<br>0: OFF<br>1: ON | | | | | | |
| | | 4 | Inhibit the speaker to sound when off-hook key is pressed<br>1: Inhibit<br>0: Not inhibit | | | | | | |
| | | 3 | | | | | | | |
| | | 2 | | | | | | | |
| | | 1 | | | | | | | |
| | | 0 | | | | | | | |
| 0e033c | Reception function (disable) | 7 | | Utility Mode (0-4) | 0x3f | 0x3f | 0x3f | XB | 8C |
| | | 6 | | | | | | | |
| | | 5 | Name display<br>0: Not inhibit<br>1: Inhibit | | | | | | |
| | | 4 | Compulsory Memory RX<br>0: Not inhibit<br>1: Inhibit | | | | | | |
| | | 3 | No. of caller / name display (number display / (display of subscribers for trace-back system))<br>0: Not inhibit<br>1: Inhibit | | | | | | |
| | | 2 | Closed-area communication<br>0: Not inhibit<br>1: Inhibit | | | | | | |
| | | 1 | Remote RX<br>0: Not inhibit<br>1: Inhibit | | | | | | |

| Address | Items | Bit No | Contents | Setting | Default | | | CSRC | |
|---|---|---|---|---|---|---|---|---|---|
| | | | | | Japan | North America | Europe | Command | Parameter |
| | | 0 | Dialin<br>0: Not inhibit<br>1: Disable | | | | | | |
| 0e033d | PBX outside line access code 1 (BCD) | 7 | 1st digit | Utility Mode | 0xff | 0xff | 0xff | XB | 8D |
| | | 6 | | | | | | | |
| | | 5 | | | | | | | |
| | | 4 | | | | | | | |
| | | 3 | 2nd digit | | | | | | |
| | | 2 | | | | | | | |
| | | 1 | | | | | | | |
| | | 0 | | | | | | | |
| 0e033e | PBX outside line access code 2 (BCD) | 7 | 3rd digit | Utility Mode | 0xff | 0xff | 0xff | XB | 8E |
| | | 6 | | | | | | | |
| | | 5 | | | | | | | |
| | | 4 | | | | | | | |
| | | 3 | 4th digit | | | | | | |
| | | 2 | | | | | | | |
| | | 1 | | | | | | | |
| | | 0 | | | | | | | |
| 0e033f | Limit of long size reception | 7 | | - | 0x00 | 0x00 | 0x00 | XB | 8F |
| | | 6 | | | | | | | |
| | | 5 | | | | | | | |
| | | 4 | | | | | | | |
| | | 3 | | | | | | | |
| | | 2 | | | | | | | |
| | | 1 | | | | | | | |
| | | 0 | Limit of long size reception<br>0: Limit<br>1: Unlimited | | | | | | |

### 5.27.10 0e034#

| Address | Items | Bit No | Contents | Setting | Default | | | CSRC | |
|---|---|---|---|---|---|---|---|---|---|
| | | | | | Japan | North America | Europe | Command | Parameter |
| 0e0340 | Max. size of long original received (In the case of 400 dpi or less) | 7 | When the resolution for reception is 400 dpi or less, the size of a long original received that is regarded as an error (The maximum length is a decimal value x 10 mm. 0 is regarded as 1000 mm.) ) | - | 0x64 | 0x64 | 0x64 | XB | 90 |
| | | 6 | | | | | | | |
| | | 5 | | | | | | | |
| | | 4 | | | | | | | |
| | | 3 | | | | | | | |
| | | 2 | | | | | | | |
| | | 1 | | | | | | | |
| | | 0 | | | | | | | |
| 0 e0341 | Max. size of long original received (In the case of 600 dpi) | 7 | When the resolution for reception is 600 dpi, the size of a long original received that is regarded as an error (The maximum length is a decimal value x 10 mm. 0 is regarded as 1000 mm.) ) | - | 0x64 | 0x64 | 0x64 | XB | 91 |
| | | 6 | | | | | | | |
| | | 5 | | | | | | | |
| | | 4 | | | | | | | |
| | | 3 | | | | | | | |
| | | 2 | | | | | | | |
| | | 1 | | | | | | | |
| | | 0 | | | | | | | |
| 0 e0342 | Voice response output level adjustment | 7 | | - | 0x62 | 0x62 | 0x62 | XB | 92 |
| | | 6 | | | | | | | |
| | | 5 | | | | | | | |
| | | 4 | | | | | | | |
| | | 3 | Voice response volume (HEX)<br>0000: min - 1111: max | | | | | | |
| | | 2 | | | | | | | |

| Address | Items | Bit No | Contents | Setting | Default | | | CSRC | |
|---|---|---|---|---|---|---|---|---|---|
| | | | | | Japan | North America | Europe | Command | Parameter |
| | | 1 | | | | | | | |
| | | 0 | | | | | | | |
| 0 e0343 | Monitor speaker (Received signal sound) | 7 | | Utility Mode (0-4) | 0x04 | 0x04 | 0x04 | XB | 93 |
| | | 6 | | | | | | | |
| | | 5 | | | | | | | |
| | | 4 | Speaker volume (HEX) (0-8) | | | | | | |
| | | 3 | | | | | | | |
| | | 2 | | | | | | | |
| | | 1 | | | | | | | |
| | | 0 | | | | | | | |
| 0 e0344 - 0e0349 | Reserved area | 7 | | - | ALL 0x00 | ALL 0x00 | ALL 0x00 | XB | 94 - 99 |
| | | 6 | | | | | | | |
| | | 5 | | | | | | | |
| | | 4 | | | | | | | |
| | | 3 | | | | | | | |
| | | 2 | | | | | | | |
| | | 1 | | | | | | | |
| | | 0 | | | | | | | |

### 5.27.11 0f004#

| Address | Items | Bit No | Contents | Setting | Default | | | CSRC | |
|---|---|---|---|---|---|---|---|---|---|
| | | | | | Japan | North America | Europe | Command | Parameter |
| 0f0040 | Reception main scan line resolution ability [0] | 7 | 400 dpi | - | 0xaa | 0xaa | 0xaa | XH | 20 |
| | | 6 | 300 dpi | | | | | | |
| | | 5 | 200 dpi | | | | | | |
| | | 4 | | | | | | | |
| | | 3 | 16 pels/mm | | | | | | |
| | | 2 | | | | | | | |
| | | 1 | 8 pels/mm | | | | | | |
| | | 0 | | | | | | | |
| 0f0041 | Reception main scan line resolution ability [1] | 7 | | - | 0x01 | 0x01 | 0x01 | XH | 21 |
| | | 6 | | | | | | | |
| | | 5 | | | | | | | |
| | | 4 | | | | | | | |
| | | 3 | | | | | | | |
| | | 2 | (1200 dpi) | | | | | | |
| | | 1 | 800 dpi | | | | | | |
| | | 0 | 600 dpi | | | | | | |
| 0f0042 | Reception sub scanning resolution ability [0] | 7 | 400 dpi | - | 0xbb | 0xbb | 0xbb | XH | 22 |
| | | 6 | 300 dpi | | | | | | |
| | | 5 | 200 dpi | | | | | | |
| | | 4 | 100 dpi | | | | | | |
| | | 3 | 15.4 l/mm | | | | | | |
| | | 2 | | | | | | | |
| | | 1 | 7.7 l/mm | | | | | | |
| | | 0 | 3.85 l/mm | | | | | | |
| 0f0043 | Reception sub scanning resolution ability [1] | 7 | | - | 0x01 | 0x01 | 0x01 | XH | 23 |
| | | 6 | | | | | | | |
| | | 5 | | | | | | | |
| | | 4 | | | | | | | |
| | | 3 | | | | | | | |
| | | 2 | (1200 dpi) | | | | | | |
| | | 1 | 800 dpi | | | | | | |
| | | 0 | 600 dpi | | | | | | |

| Address | Items | Bit No | Contents | Setting | Default | | | CSRC | |
|---|---|---|---|---|---|---|---|---|---|
| | | | | | Japan | North America | Europe | Command | Parameter |
| 0f0044 | Reception coding method ability | 7 | | - | 0x1f | 0x1f | 0x1f | XH | 24 |
| | | 6 | | | | | | | |
| | | 5 | (JPEG) | | | | | | |
| | | 4 | JBIG | | | | | | |
| | | 3 | MMR | | | | | | |
| | | 2 | MR | | | | | | |
| | | 1 | MH | | | | | | |
| | | 0 | THRU | | | | | | |
| 0f0045 | Received document width ability | 7 | | - | 0x0e | 0x0e | 0x0e | XH | 25 |
| | | 6 | | | | | | | |
| | | 5 | (Legal) | | | | | | |
| | | 4 | (Letter) | | | | | | |
| | | 3 | A3 | | | | | | |
| | | 2 | B4 | | | | | | |
| | | 1 | A4 | | | | | | |
| | | 0 | (A5) | | | | | | |
| 0f0046 | Received document length ability | 7 | | - | 0x46 | 0x46 | 0x46 | XH | 26 |
| | | 6 | Unlimited | | | | | | |
| | | 5 | (Legal) | | | | | | |
| | | 4 | (Letter) | | | | | | |
| | | 3 | | | | | | | |
| | | 2 | B4 | | | | | | |
| | | 1 | A4 | | | | | | |
| | | 0 | (A5) | | | | | | |
| 0f0047 | Reception speed ability [0] | 7 | | - | 0x1b | 0x1b | 0x1b | XH | 27 |
| | | 6 | | | | | | | |
| | | 5 | | | | | | | |
| | | 4 | V.29-96 | | | | | | |
| | | 3 | V.29-72 | | | | | | |
| | | 2 | | | | | | | |
| | | 1 | V.27-48 | | | | | | |
| | | 0 | V.27-24 | | | | | | |
| 0f0048 | Reception speed ability [1] | 7 | V.17-144 | - | 0xfc | 0xfc | 0xfc | XH | 28 |
| | | 6 | V.17-120 | | | | | | |
| | | 5 | V.17-96 | | | | | | |
| | | 4 | V.17-72 | | | | | | |
| | | 3 | V.33-144 | | | | | | |
| | | 2 | V.33-120 | | | | | | |
| | | 1 | (TCM-96) | | | | | | |
| | | 0 | (TCM-72) | | | | | | |
| 0f0049 | Reception speed ability [2] | 7 | V.34-192 | - | 0xff | 0xff | 0xff | XH | 29 |
| | | 6 | V.34-168 | | | | | | |
| | | 5 | V.34-144 | | | | | | |
| | | 4 | V.34-120 | | | | | | |
| | | 3 | V.34-96 | | | | | | |
| | | 2 | V.34-72 | | | | | | |
| | | 1 | V.34-48 | | | | | | |
| | | 0 | V.34-24 | | | | | | |
| 0f004a | Reception speed ability [3] | 7 | | - | 0x3f | 0x3f | 0x3f | XH | 2A |
| | | 6 | | | | | | | |
| | | 5 | V.34-336 | | | | | | |
| | | 4 | V.34-312 | | | | | | |
| | | 3 | V.34-288 | | | | | | |
| | | 2 | V.34-264 | | | | | | |
| | | 1 | V.34-240 | | | | | | |

| Address | Items | Bit No | Contents | Setting | Default | | | CSRC | |
|---|---|---|---|---|---|---|---|---|---|
| | | | | | Japan | North America | Europe | Command | Parameter |
| | | 0 | V.34-216 | | | | | | |
| 0f004b | Reception MSLT ability | 7 | T3.85 or 200 x 100dpi (0-40) ms unit | - | 0x05 | 0x05 | 0x05 | XH | 2B |
| | | 6 | | | | | | | |
| | | 5 | | | | | | | |
| | | 4 | | | | | | | |
| | | 3 | | | | | | | |
| | | 2 | | | | | | | |
| | | 1 | | | | | | | |
| | | 0 | | | | | | | |
| 0f004c | Reception MSLT ability | 7 | T7.7 or 200 x 200dpi (0-40) ms unit | - | 0x05 | 0x05 | 0x05 | XH | 2C |
| | | 6 | | | | | | | |
| | | 5 | | | | | | | |
| | | 4 | | | | | | | |
| | | 3 | | | | | | | |
| | | 2 | | | | | | | |
| | | 1 | | | | | | | |
| | | 0 | | | | | | | |
| 0f004d | Reception MSLT ability | 7 | T11.55 or 300 x 300dpi (0-40) ms unit | - | 0x05 | 0x05 | 0x05 | XH | 2D |
| | | 6 | | | | | | | |
| | | 5 | | | | | | | |
| | | 4 | | | | | | | |
| | | 3 | | | | | | | |
| | | 2 | | | | | | | |
| | | 1 | | | | | | | |
| | | 0 | | | | | | | |
| 0f004e | Reception MSLT ability | 7 | T15.4 or 400 x 400dpi or 600 x 600dpi (0-40) ms unit | - | 0x05 | 0x05 | 0x05 | XH | 2E |
| | | 6 | | | | | | | |
| | | 5 | | | | | | | |
| | | 4 | | | | | | | |
| | | 3 | | | | | | | |
| | | 2 | | | | | | | |
| | | 1 | | | | | | | |
| | | 0 | | | | | | | |
| 0f004f | Reception ECM ability | 7 | | - | 0x01 | 0x01 | 0x01 | XH | 2F |
| | | 6 | | | | | | | |
| | | 5 | | | | | | | |
| | | 4 | | | | | | | |
| | | 3 | | | | | | | |
| | | 2 | | | | | | | |
| | | 1 | | | | | | | |
| | | 0 | ECM reception capability<br>0: OFF<br>1: ON | | | | | | |

### 5.27.12 0f005#

| Address | Items | Bit No | Contents | Setting | Default | | | CSRC | |
|---|---|---|---|---|---|---|---|---|---|
| | | | | | Japan | North America | Europe | Command | Parameter |
| 0f0050 | Reception protocol ability | 7 | | - | 0x11 | 0x11 | 0x11 | XH | 30 |
| | | 6 | | | | | | | |
| | | 5 | | | | | | | |
| | | 4 | V.8/V.34 | | | | | | |
| | | 3 | | | | | | | |
| | | 2 | | | | | | | |
| | | 1 | | | | | | | |

| Address | Items | Bit No | Contents | Setting | Default | | | CSRC | |
|---|---|---|---|---|---|---|---|---|---|
| | | | | | Japan | North America | Europe | Command | Parameter |
| | | 0 | G3S | | | | | | |
| 0f0051 | Reception option frame ability | 7 | | - | 0x07 | 0x07 | 0x07 | XH | 31 |
| | | 6 | | | | | | | |
| | | 5 | | | | | | | |
| | | 4 | (BFT) | | | | | | |
| | | 3 | (BTM) | | | | | | |
| | | 2 | PWD | | | | | | |
| | | 1 | (SEP) | | | | | | |
| | | 0 | SUB | | | | | | |
| 0f0052 - 0f005f | Reserved area | 7 | | - | ALL 0x00 | ALL 0x00 | ALL 0x00 | XH | 32 - 3F |
| | | 6 | | | | | | | |
| | | 5 | | | | | | | |
| | | 4 | | | | | | | |
| | | 3 | | | | | | | |
| | | 2 | | | | | | | |
| | | 1 | | | | | | | |
| | | 0 | | | | | | | |

### 5.27.13 10004#

| Address | Items | Bit No | Contents | Setting | Default | | | CSRC | |
|---|---|---|---|---|---|---|---|---|---|
| | | | | | Japan | North America | Europe | Command | Parameter |
| 100040 | Transmission main scan line resolution instruction [0] | 7 | 400 dpi | - | 0x22 | 0x22 | 0x22 | XH | 60 |
| | | 6 | 300 dpi | | | | | | |
| | | 5 | 200 dpi | | | | | | |
| | | 4 | | | | | | | |
| | | 3 | 16 pels/mm | | | | | | |
| | | 2 | | | | | | | |
| | | 1 | 8 pels/mm | | | | | | |
| | | 0 | | | | | | | |
| 100041 | Transmission main scan line resolution instruction [1] | 7 | | - | 0x01 | 0x01 | 0x01 | XH | 61 |
| | | 6 | | | | | | | |
| | | 5 | | | | | | | |
| | | 4 | | | | | | | |
| | | 3 | | | | | | | |
| | | 2 | (1200 dpi) | | | | | | |
| | | 1 | 800 dpi | | | | | | |
| | | 0 | 600 dpi | | | | | | |
| 100042 | Transmission sub scanning resolution instruction [0] | 7 | 400 dpi | - | 0x11 | 0x11 | 0x11 | XH | 62 |
| | | 6 | 300 dpi | | | | | | |
| | | 5 | 200 dpi | | | | | | |
| | | 4 | 100 dpi | | | | | | |
| | | 3 | 15.4 l/mm | | | | | | |
| | | 2 | | | | | | | |
| | | 1 | 7.7 l/mm | | | | | | |
| | | 0 | 3.85 l/mm | | | | | | |
| 100043 | Transmission sub scanning resolution instruction [1] | 7 | | - | 0x01 | 0x01 | 0x01 | XH | 63 |
| | | 6 | | | | | | | |
| | | 5 | | | | | | | |
| | | 4 | | | | | | | |
| | | 3 | | | | | | | |
| | | 2 | (1200 dpi) | | | | | | |
| | | 1 | 800 dpi | | | | | | |
| | | 0 | 600 dpi | | | | | | |

| Address | Items | Bit No | Contents | Setting | Default | | | CSRC | |
|---|---|---|---|---|---|---|---|---|---|
| | | | | | Japan | North America | Europe | Command | Parameter |
| 100044 | Transmission coding method instruction | 7 | | - | 0x1f | 0x1f | 0x1f | XH | 64 |
| | | 6 | | | | | | | |
| | | 5 | (JPEG) | | | | | | |
| | | 4 | JBIG | | | | | | |
| | | 3 | MMR | | | | | | |
| | | 2 | MR | | | | | | |
| | | 1 | MH | | | | | | |
| | | 0 | THRU | | | | | | |
| 100045 | Transmission document width instruction | 7 | | - | 0x0e | 0x0e | 0x0e | XH | 65 |
| | | 6 | | | | | | | |
| | | 5 | (Legal) | | | | | | |
| | | 4 | (Letter) | | | | | | |
| | | 3 | A3 | | | | | | |
| | | 2 | B4 | | | | | | |
| | | 1 | A4 | | | | | | |
| | | 0 | (A5) | | | | | | |
| 100046 | Transmission document length instruction | 7 | | - | 0x46 | 0x46 | 0x46 | XH | 66 |
| | | 6 | Unlimited | | | | | | |
| | | 5 | (Legal) | | | | | | |
| | | 4 | (Letter) | | | | | | |
| | | 3 | | | | | | | |
| | | 2 | B4 | | | | | | |
| | | 1 | A4 | | | | | | |
| | | 0 | (A5) | | | | | | |
| 100047 | Transmission speed instruction [0] | 7 | | - | 0x1b | 0x1b | 0x1b | XH | 67 |
| | | 6 | | | | | | | |
| | | 5 | | | | | | | |
| | | 4 | V.29-96 | | | | | | |
| | | 3 | V.29-72 | | | | | | |
| | | 2 | | | | | | | |
| | | 1 | V.27-48 | | | | | | |
| | | 0 | V.27-24 | | | | | | |
| 100048 | Transmission speed instruction [1] | 7 | V.17-144 | - | 0xf0 | 0xf0 | 0xf0 | XH | 68 |
| | | 6 | V.17-120 | | | | | | |
| | | 5 | V.17-96 | | | | | | |
| | | 4 | V.17-72 | | | | | | |
| | | 3 | V.33-144 | | | | | | |
| | | 2 | V.33-120 | | | | | | |
| | | 1 | (TCM-96) | | | | | | |
| | | 0 | (TCM-72) | | | | | | |
| 100049 | Transmission speed instruction [2] | 7 | V.34-192 | - | 0xff | 0xff | 0xff | XH | 69 |
| | | 6 | V.34-168 | | | | | | |
| | | 5 | V.34-144 | | | | | | |
| | | 4 | V.34-120 | | | | | | |
| | | 3 | V.34-96 | | | | | | |
| | | 2 | V.34-72 | | | | | | |
| | | 1 | V.34-48 | | | | | | |
| | | 0 | V.34-24 | | | | | | |
| 10004a | Transmission speed instruction [3] | 7 | | - | 0x3f | 0x3f | 0x3f | XH | 6A |
| | | 6 | | | | | | | |
| | | 5 | V.34-336 | | | | | | |
| | | 4 | V.34-312 | | | | | | |
| | | 3 | V.34-288 | | | | | | |
| | | 2 | V.34-264 | | | | | | |
| | | 1 | V.34-240 | | | | | | |

| Address | Items | Bit No | Contents | Setting | Default | | | CSRC | |
|---|---|---|---|---|---|---|---|---|---|
| | | | | | Japan | North America | Europe | Command | Parameter |
| | | 0 | V.34-216 | | | | | | |
| 10004b | Transmission MSLT instruction | 7 | T3.85 or 200 x 100dpi (0-40) ms unit | - | 0x05 | 0x05 | 0x05 | XH | 6B |
| | | 6 | | | | | | | |
| | | 5 | | | | | | | |
| | | 4 | | | | | | | |
| | | 3 | | | | | | | |
| | | 2 | | | | | | | |
| | | 1 | | | | | | | |
| | | 0 | | | | | | | |
| 10004c | Transmission MSLT instruction | 7 | T7.7 or 200 x 200dpi (0-40) ms unit | - | 0x05 | 0x05 | 0x05 | XH | 6C |
| | | 6 | | | | | | | |
| | | 5 | | | | | | | |
| | | 4 | | | | | | | |
| | | 3 | | | | | | | |
| | | 2 | | | | | | | |
| | | 1 | | | | | | | |
| | | 0 | | | | | | | |
| 10004d | Transmission MSLT instruction | 7 | T11.55 or 300 x 300dpi (0-40) ms unit | - | 0x05 | 0x05 | 0x05 | XH | 6D |
| | | 6 | | | | | | | |
| | | 5 | | | | | | | |
| | | 4 | | | | | | | |
| | | 3 | | | | | | | |
| | | 2 | | | | | | | |
| | | 1 | | | | | | | |
| | | 0 | | | | | | | |
| 10004e | Transmission MSLT instruction | 7 | T15.4 or 400 x 400dpi or 600 x 600dpi (0-40) ms unit | - | 0x05 | 0x05 | 0x05 | XH | 6E |
| | | 6 | | | | | | | |
| | | 5 | | | | | | | |
| | | 4 | | | | | | | |
| | | 3 | | | | | | | |
| | | 2 | | | | | | | |
| | | 1 | | | | | | | |
| | | 0 | | | | | | | |
| 10004f | Transmission ECM instruction | 7 | | - | 0x01 | 0x01 | 0x01 | XH | 6F |
| | | 6 | | | | | | | |
| | | 5 | | | | | | | |
| | | 4 | | | | | | | |
| | | 3 | | | | | | | |
| | | 2 | | | | | | | |
| | | 1 | ECM transmission frame size<br>0: 256<br>1: 64 | | | | | | |
| | | 0 | ECM transmission instruction<br>0: OFF<br>1: ON | | | | | | |

### 5.27.14 10005#

| Address | Items | Bit No | Contents | Setting | Default | | | CSRC | |
|---|---|---|---|---|---|---|---|---|---|
| | | | | | Japan | North America | Europe | Command | Parameter |
| 100050 | Transmission protocol instruction | 7 | | - | 0x11 | 0x11 | 0x11 | XH | 70 |
| | | 6 | | | | | | | |
| | | 5 | | | | | | | |
| | | 4 | V.8/V.34 | | | | | | |
| | | 3 | | | | | | | |
| | | 2 | | | | | | | |

| Address | Items | Bit No | Contents | Setting | Default | | | CSRC | |
|---|---|---|---|---|---|---|---|---|---|
| | | | | | Japan | North America | Europe | Command | Parameter |
| | | 1 | | | | | | | |
| | | 0 | G3S | | | | | | |
| 100051 | Transmission option frame instruction | 7 | | - | 0x00 | 0x00 | 0x00 | XH | 71 |
| | | 6 | | | | | | | |
| | | 5 | | | | | | | |
| | | 4 | (BFT) | | | | | | |
| | | 3 | (BTM) | | | | | | |
| | | 2 | PWD | | | | | | |
| | | 1 | (SEP) | | | | | | |
| | | 0 | SUB | | | | | | |
| 100052 - 10005f | Reserved area 1 | 7 | | - | ALL 0x00 | ALL 0x00 | ALL 0x00 | XH | 72 - 7F |
| | | 6 | | | | | | | |
| | | 5 | | | | | | | |
| | | 4 | | | | | | | |
| | | 3 | | | | | | | |
| | | 2 | | | | | | | |
| | | 1 | | | | | | | |
| | | 0 | | | | | | | |

## 5.28 FAX setting (Address parameter list: for line 4)

### 5.28.1 0e03c#

| Address | Items | Bit No | Contents | Setting | Default | | | CSRC | |
|---|---|---|---|---|---|---|---|---|---|
| | | | | | Japan | North America | Europe | Command | Parameter |
| 0e03c0 | Transmission ATT | 7 | Tone signal/FSK transmission ATT (HEX) every 1 dBm (0 to -15dBm) | Utility Mode Special Setting | 0xaa | 0xaa | 0xaa | XB | 00 |
| | | 6 | | | | | | | |
| | | 5 | | | | | | | |
| | | 4 | | | | | | | |
| | | 3 | High-speed signal transmission ATT (HEX) every 1 dBm (0 to -15dBm) | | | | | | |
| | | 2 | | | | | | | |
| | | 1 | | | | | | | |
| | | 0 | | | | | | | |
| 0e03c1 | CED transmission ATT | 7 | | Utility Mode Special Setting (0-3) | 0x0a | 0x0a | 0x0a | XB | 01 |
| | | 6 | | | | | | | |
| | | 5 | | | | | | | |
| | | 4 | | | | | | | |
| | | 3 | CED/ANS transmission ATT (HEX) every 1 dBm (0 to -15dBm) | | | | | | |
| | | 2 | | | | | | | |
| | | 1 | | | | | | | |
| | | 0 | | | | | | | |
| 0e03c2 | CD/SED ON level | 7 | | Utility Mode Special Setting (0,1) | 0x03 | 0x03 | 0x03 | XB | 02 |
| | | 6 | | | | | | | |
| | | 5 | | | | | | | |
| | | 4 | | | | | | | |
| | | 3 | | | | | | | |
| | | 2 | | | | | | | |
| | | 1 | CD/SED ON level [dBm]<br>00: -33<br>01: -38<br>10: -43<br>11: -48 | | | | | | |
| | | 0 | | | | | | | |
| 0e03c3 | Cable equalizer | 7 | | Utility Mode Special Setting (4,5) | 0x00 | 0x00 | 0x00 | XB | 03 |
| | | 6 | | | | | | | |
| | | 5 | Cable EQL transmission selection<br>00: OFF<br>01: Send only | | | | | | |

| Address | Items | Bit No | Contents | Setting | Default | | | CSRC | |
|---|---|---|---|---|---|---|---|---|---|
| | | | | | Japan | North America | Europe | Command | Parameter |
| | | 4 | 10: Receive only<br>11: Send and receive | | | | | | |
| | | 3 | | | | | | | |
| | | 2 | | | | | | | |
| | | 1 | Cable EQL parameter selection<br>00: 1.8 km<br>01: 3.6km<br>10: 7.2km<br>11: NTT4 | | | | | | |
| | | 0 | | | | | | | |
| 0e03c4 | V34 Points | 7 | | Utility Mode Special Setting (4,5) | 0x00 | 0x00 | 0x00 | XB | 04 |
| | | 6 | | | | | | | |
| | | 5 | | | | | | | |
| | | 4 | | | | | | | |
| | | 3 | | | | | | | |
| | | 2 | | | | | | | |
| | | 1 | V34 Point<br>00: Auto<br>01: 16-point<br>10: 4-point | | | | | | |
| | | 0 | | | | | | | |
| 0e03c5 | TEL/FAX switching (For Japan models only)<br>*Use Line 1 only | 7 | Time from vocal response to RBT transmission (CNG detection waiting time 2)<br>0: 4 sec.<br>1: 2 sec. | Utility Mode Special Setting (4,5) | 0x00 | 0x00 | 0x00 | XB | 05 |
| | | 6 | Time from reception to voice response transmission (CNG detection waiting time 1)<br>0: 2 sec.<br>1: 4 sec. | | | | | | |
| | | 5 | TEL/FAX switching mode<br>0: Disabled<br>1: Enabled | | | | | | |
| | | 4 | External telephone no ringing setting<br>0: Disabled<br>1: Enabled (disconnected) | | | | | | |
| | | 3 | TEL/FAX switching ON response details<br>0: Voice response + RBT transmission<br>1: RBT transmission only | | | | | | |
| | | 2 | | | | | | | |
| | | 1 | | | | | | | |
| | | 0 | | | | | | | |
| 0e03c6 | Ring Back Tone parameter (For Japan models only)<br>*Use Line 1 only | 7 | RBT form<br>000: No<br>001: Japan<br>010: US<br>011: UK<br>100: Germany<br>101 to 111: Others | Utility Mode Special Setting (0-3,5-7) | 0x2a | 0x4a | 0x68 | XB | 06 |
| | | 6 | | | | | | | |
| | | 5 | | | | | | | |
| | | 4 | CED transmitted upon TEL/FAX switching | | | | | | |
| | | 3 | RBT transmission level (HEX)<br>0 to -15 dBm | | | | | | |
| | | 2 | | | | | | | |
| | | 1 | | | | | | | |
| | | 0 | | | | | | | |
| 0e03c7 | International com mode operation | 7 | DIS waiting frequency<br>0: Always once<br>1: Twice in overseas communication | Utility Mode Special Setting (6,7) | 0x40 | 0x40 | 0x40 | XB | 07 |
| | | 6 | Overseas communication<br>0: No<br>1: Yes | | | | | | |

| Address | Items | Bit No | Contents | Setting | Default | | | CSRC | |
|---|---|---|---|---|---|---|---|---|---|
| | | | | | Japan | North America | Europe | Command | Parameter |
| | | 5 | | | | | | | |
| | | 4 | | | | | | | |
| | | 3 | | | | | | | |
| | | 2 | | | | | | | |
| | | 1 | | | | | | | |
| | | 0 | | | | | | | |
| 0e03c8 | Starting speed in international mode (V29 modem) | 7 | | Utility Mode Special Setting (0,1,3,4) | 0x02 | 0x02 | 0x02 | XB | 08 |
| | | 6 | | | | | | | |
| | | 5 | | | | | | | |
| | | 4 | 9600 bps/V.29 | | | | | | |
| | | 3 | 7200 bps/V.29 | | | | | | |
| | | 2 | | | | | | | |
| | | 1 | 4800 bps/V.27 ter | | | | | | |
| | | 0 | 2400 bps/V.27 ter | | | | | | |
| 0e03c9 | Starting speed in international mode (V17 or V33 modem) | 7 | 14400 bps/V.17 | Utility Mode Special Setting (4-7) | 0x10 | 0x10 | 0x10 | XB | 09 |
| | | 6 | 12000 bps/V.17 | | | | | | |
| | | 5 | 9600 bps/V.17 | | | | | | |
| | | 4 | 7200 bps/V.17 | | | | | | |
| | | 3 | | | | | | | |
| | | 2 | | | | | | | |
| | | 1 | | | | | | | |
| | | 0 | | | | | | | |
| 0e03ca | Starting speed in international mode (V34) | 7 | 33600 bps/V.34 | Utility Mode Special Setting | 0x20 | 0x20 | 0x20 | XB | 0A |
| | | 6 | 31200 bps/V.34 | | | | | | |
| | | 5 | 28800 bps/V.34 | | | | | | |
| | | 4 | 26400 bps/V.34 | | | | | | |
| | | 3 | 24000 bps/V.34 | | | | | | |
| | | 2 | 21600 bps/V.34 | | | | | | |
| | | 1 | 19200 bps/V.34 | | | | | | |
| | | 0 | 16800 bps/V.34 | | | | | | |
| 0e03cb | CD OFF timer | 7 | CD OFF timer (Unit: 100 ms, HEX) | - | 0x14 | 0x14 | 0x14 | XB | 0B |
| | | 6 | | | | | | | |
| | | 5 | | | | | | | |
| | | 4 | | | | | | | |
| | | 3 | | | | | | | |
| | | 2 | | | | | | | |
| | | 1 | | | | | | | |
| | | 0 | | | | | | | |
| 0e03cc | CD ON integration time | 7 | CD ON integration time (Unit: 100 ms. HEX) | - | 0x06 | 0x06 | 0x06 | XB | 0C |
| | | 6 | | | | | | | |
| | | 5 | | | | | | | |
| | | 4 | | | | | | | |
| | | 3 | | | | | | | |
| | | 2 | | | | | | | |
| | | 1 | | | | | | | |
| | | 0 | | | | | | | |
| 0e03cd | Max. allowable symbol speed | 7 | V34 controll ch data rate<br>0: 1200<br>1: 2400 | Utility Mode Special Setting (0-3,7) | 0x05 | 0x05 | 0x05 | XB | 0D |
| | | 6 | | | | | | | |
| | | 5 | | | | | | | |
| | | 4 | | | | | | | |
| | | 3 | Max. allowable symbol speed<br>0000: 2400<br>0001: Reserved<br>0010: 2800<br>0011: 3000 | | | | | | |
| | | 2 | | | | | | | |
| | | 1 | | | | | | | |

| Address | Items | Bit No | Contents | Setting | Default | | | CSRC | |
|---|---|---|---|---|---|---|---|---|---|
| | | | | | Japan | North America | Europe | Command | Parameter |
| | | 0 | 0100: 3200<br>0101: 3429 | | | | | | |
| 0e03ce | V34 primary channel fallback | 7 | No. of frame errors subjected to fallback (HEX) | - | 0x03 | 0x03 | 0x03 | XB | 0E |
| | | 6 | | | | | | | |
| | | 5 | | | | | | | |
| | | 4 | | | | | | | |
| | | 3 | | | | | | | |
| | | 2 | | | | | | | |
| | | 1 | | | | | | | |
| | | 0 | | | | | | | |

### 5.28.2 0e03d#

| Address | Items | Bit No | Contents | Setting | Default | | | CSRC | |
|---|---|---|---|---|---|---|---|---|---|
| | | | | | Japan | North America | Europe | Command | Parameter |
| 0e03d0 | V34 off Rx-V34 off time after error | 7 | Timer value after V34 reception error used to reset V34 off reception (min, HEX) (Valid only when transmission side cannot be specified) | - | 0x0a | 0x0a | 0x0a | XB | 10 |
| | | 6 | | | | | | | |
| | | 5 | | | | | | | |
| | | 4 | | | | | | | |
| | | 3 | | | | | | | |
| | | 2 | | | | | | | |
| | | 1 | | | | | | | |
| | | 0 | | | | | | | |
| 0e03d1 | V34 off Rx-V17 OK Rx times to reset V34 off Rx | 7 | No. of continuous success of V17 receptions used to reset V34 off reception after V34 reception error (times, HEX) (Valid only when transmission side can be specified with Caller ID) | - | 0x0a | 0x0a | 0x0a | XB | 11 |
| | | 6 | | | | | | | |
| | | 5 | | | | | | | |
| | | 4 | | | | | | | |
| | | 3 | | | | | | | |
| | | 2 | | | | | | | |
| | | 1 | | | | | | | |
| | | 0 | | | | | | | |
| 0e03d2 | (Inhibit of) V34 off Rx-Function ON/ OFF | 7 | | - | 0x00 | 0x02 | 0x02 | XB | 12 |
| | | 6 | | | | | | | |
| | | 5 | | | | | | | |
| | | 4 | | | | | | | |
| | | 3 | | | | | | | |
| | | 2 | | | | | | | |
| | | 1 | V.34 OFF reset mode = No. of successful consecutive V.17 reception times (ID specified)<br>0: Enabled<br>1: Inhibit | | | | | | |
| | | 0 | V.34 OFF reset mode = time (ID cannot be specified)<br>0: Enabled<br>1: Disable | | | | | | |
| 0e03d3 | JBIG parameter | 7 | | - | 0x01 | 0x01 | 0x01 | XB | 13 |
| | | 6 | | | | | | | |
| | | 5 | | | | | | | |
| | | 4 | | | | | | | |
| | | 3 | | | | | | | |
| | | 2 | | | | | | | |
| | | 1 | Use of following FP JBIG option LO size at reduction<br>0: No<br>1: Yes | | | | | | |

| Address | Items | Bit No | Contents | Setting | Default | | | CSRC | |
|---|---|---|---|---|---|---|---|---|---|
| | | | | | Japan | North America | Europe | Command | Parameter |
| | | 0 | JBIG optional L0 capacity<br>0: No<br>1: Yes | | | | | | |
| 0e03d4 | JBIG LO size | 7<br>6<br>5<br>4<br>3<br>2<br>1<br>0 | JBIG optional LO size used for reduction (HEX) (setting range: 0x01to0xffffffff)<br>[0] = HH, [1] = HL, [2] = LH, [3] = LL | - | 0x00<br>0x00<br>0x00<br>0x80 | 0x00<br>0x00<br>0x00<br>0x80 | 0x00<br>0x00<br>0x00<br>0x80 | XB | 14 |
| 0e03d5 | (Inhibit of) JBIG off Rx-Function ON/ OFF | 7<br>6<br>5<br>4<br>3<br>2 | | - | 0x00 | 0x00 | 0x00 | XB | 18 |
| | | 1 | JBIG off function at A3 high-definition reception (DIS retransmission)<br>0: OFF<br>1: ON | | | | | | |
| | | 0 | JBIG off function after JBIG reception error<br>0: Enable<br>1: Disable | | | | | | |
| 0e03d6 - 0e03d9 | JBIG off Rx-JBIG off time after error | 7<br>6<br>5<br>4<br>3<br>2<br>1<br>0 | Timer value after JBIG reception error to reset JBIG off reception (min, HEX) (10 min. if 0) | - | 0x0a | 0x0a | 0x0a | XB | 19 |
| 0e03da | PBX dial tone detection frequency pattern | 7 | | - | 0x08 | 0x00 | 0x00 | XB | 1A |
| | | 6 | Tone type<br>0: Single<br>1: Dual | | | | | | |
| | | 5 | | | | | | | |
| | | 4<br>3<br>2<br>1<br>0 | PBX dial tone detection frequency pattern<br>1: 155 ±65 Hz<br>2: 375 ±125 Hz<br>3: 400 ±90 Hz<br>4: 400 ±100 Hz<br>5: 420 ±90 Hz<br>6: 425 ±75 Hz<br>7: 425 ±95 Hz<br>8: 425 ±125 Hz<br>9: 430 ±90 Hz<br>10: 435 ±85 Hz<br>11: 440 ±90 Hz<br>12: 445 ±125 Hz<br>13: 450 ±50 Hz<br>14: 450 ±70 Hz<br>15: 450 ±100 Hz<br>16: 450 ±120 Hz<br>17: 460 ±140 Hz<br>18: 465 ±205 Hz<br>19: 475 ±175 Hz<br>20: 480 ±90 Hz<br>21: 480 ±190 Hz<br>22: 1155 ±25 Hz | | | | | | |

| Address | Items | Bit No | Contents | Setting | Default | | | CSRC | |
|---|---|---|---|---|---|---|---|---|---|
| | | | | | Japan | North America | Europe | Command | Parameter |
| 0e03db | PBX dial tone detection time | 7 | PBX dial tone detection time or max. ON time value (unit: 20 ms, HEX) | - | 0x32 | 0x00 | 0x00 | XB | 1B |
| | | 6 | | | | | | | |
| | | 5 | | | | | | | |
| | | 4 | | | | | | | |
| | | 3 | | | | | | | |
| | | 2 | | | | | | | |
| | | 1 | | | | | | | |
| | | 0 | | | | | | | |
| 0e03dc | PBX dial tone ON time min. value | 7 | PBX dial tone ON time min. value (unit: 20ms, HEX) | - | 0x00 | 0x00 | 0x00 | XB | 1C |
| | | 6 | | | | | | | |
| | | 5 | | | | | | | |
| | | 4 | | | | | | | |
| | | 3 | | | | | | | |
| | | 2 | | | | | | | |
| | | 1 | | | | | | | |
| | | 0 | | | | | | | |
| 0e03dd | PBX dial tone OFF time max. value | 7 | PBX dial tone OFF time max. value (unit: 20 ms, HEX) | - | 0x00 | 0x00 | 0x00 | XB | 1D |
| | | 6 | | | | | | | |
| | | 5 | | | | | | | |
| | | 4 | | | | | | | |
| | | 3 | | | | | | | |
| | | 2 | | | | | | | |
| | | 1 | | | | | | | |
| | | 0 | | | | | | | |
| 0e03de | PBX dial tone OFF time min. value | 7 | PBX dial tone OFF time min. value (unit: 20 ms, HEX) | - | 0x00 | 0x00 | 0x00 | XB | 1E |
| | | 6 | | | | | | | |
| | | 5 | | | | | | | |
| | | 4 | | | | | | | |
| | | 3 | | | | | | | |
| | | 2 | | | | | | | |
| | | 1 | | | | | | | |
| | | 0 | | | | | | | |
| 0e03df | PBX dial tone waiting time | 7 | PBX dial tone waiting time or pre-pause time (unit: 1 sec, HEX) | - | 0x03 | 0x03 | 0x03 | XB | 1F |
| | | 6 | | | | | | | |
| | | 5 | | | | | | | |
| | | 4 | | | | | | | |
| | | 3 | | | | | | | |
| | | 2 | | | | | | | |
| | | 1 | | | | | | | |
| | | 0 | | | | | | | |

### 5.28.3 0e03e#

| Address | Items | Bit No | Contents | Setting | Default | | | CSRC | |
|---|---|---|---|---|---|---|---|---|---|
| | | | | | Japan | North America | Europe | Command | Parameter |
| 0e03e0 | PBX dial tone instantaneous break detection time | 7 | Instantaneous shutdown time (unit: 20 ms, HEX) or tone detection frequency (times, HEX) | - | 0x00 | 0x00 | 0x00 | XB | 20 |
| | | 6 | | | | | | | |
| | | 5 | | | | | | | |
| | | 4 | | | | | | | |
| | | 3 | | | | | | | |
| | | 2 | | | | | | | |
| | | 1 | | | | | | | |
| | | 0 | | | | | | | |

| Address | Items | Bit No | Contents | Setting | Default | | | CSRC | |
|---|---|---|---|---|---|---|---|---|---|
| | | | | | Japan | North America | Europe | Command | Parameter |
| 0e03e1 | 1st dial tone detection frequency pattern | 7 | | - | 0x08 | 0x35 | 0x13 | XB | 21 |
| | | 6 | Tone type<br>0: Single<br>1: Dual | | | | | | |
| | | 5 | | | | | | | |
| | | 4 | 1st dial tone detection frequency pattern<br>1: 155 ±65 Hz<br>2: 375 ±125 Hz<br>3: 400 ±90 Hz<br>4: 400 ±100 Hz<br>5: 420 ±90 Hz<br>6: 425 ±75 Hz<br>7: 425 ±95 Hz<br>8: 425 ±125 Hz<br>9: 430 ±90 Hz<br>10: 435 ±85 Hz<br>11: 440 ±90 Hz<br>12: 445 ±125 Hz<br>13: 450 ±50 Hz<br>14: 450 ±70 Hz<br>15: 450 ±100 Hz<br>16: 450 ±120 Hz<br>17: 460 ±140 Hz<br>18: 465 ±205 Hz<br>19: 475 ±175 Hz<br>20: 480 ±90 Hz<br>21: 480 ±190 Hz<br>22: 1155 ±25 Hz | | | | | |
| | | 3 | | | | | | | |
| | | 2 | | | | | | | |
| | | 1 | | | | | | | |
| | | 0 | | | | | | | |
| 0e03e2 | 1st dial tone detection time | 7 | 1st dial tone detection time or ON time max. value (unit: 20 ms, HEX) | - | 0x32 | 0x32 | 0x1a | XB | 22 |
| | | 6 | | | | | | | |
| | | 5 | | | | | | | |
| | | 4 | | | | | | | |
| | | 3 | | | | | | | |
| | | 2 | | | | | | | |
| | | 1 | | | | | | | |
| | | 0 | | | | | | | |
| 0e03e3 | 1st dial tone ON time min. value | 7 | 1st dial tone ON time min. value (unit: 20 ms, HEX) | - | 0x00 | 0x00 | 0x00 | XB | 23 |
| | | 6 | | | | | | | |
| | | 5 | | | | | | | |
| | | 4 | | | | | | | |
| | | 3 | | | | | | | |
| | | 2 | | | | | | | |
| | | 1 | | | | | | | |
| | | 0 | | | | | | | |
| 0e03e4 | 1st dial tone OFF time max. value | 7 | 1st dial tone OFF time max. value (unit: 20 ms, HEX) | - | 0x00 | 0x00 | 0x00 | XB | 24 |
| | | 6 | | | | | | | |
| | | 5 | | | | | | | |
| | | 4 | | | | | | | |
| | | 3 | | | | | | | |
| | | 2 | | | | | | | |
| | | 1 | | | | | | | |
| | | 0 | | | | | | | |
| 0e03e5 | 1st dial tone OFF time min. value | 7 | 1st dial tone OFF time min. value (unit: 20 ms, HEX) | - | 0x00 | 0x00 | 0x00 | XB | 25 |
| | | 6 | | | | | | | |
| | | 5 | | | | | | | |
| | | 4 | | | | | | | |
| | | 3 | | | | | | | |
| | | 2 | | | | | | | |
| | | 1 | | | | | | | |
| | | 0 | | | | | | | |

| Address | Items | Bit No | Contents | Setting | Default | | | CSRC | |
|---|---|---|---|---|---|---|---|---|---|
| | | | | | Japan | North America | Europe | Command | Parameter |
| 0e03e6 | 1st dial tone waiting time | 7 | 1st dial tone waiting time or pre-pause time (unit: 1 sec, HEX) | - | 0x03 | 0x03 | 0x04 | XB | 26 |
| | | 6 | | | | | | | |
| | | 5 | | | | | | | |
| | | 4 | | | | | | | |
| | | 3 | | | | | | | |
| | | 2 | | | | | | | |
| | | 1 | | | | | | | |
| | | 0 | | | | | | | |
| 0e03e7 | 1st dial tone instantaneous break detection time | 7 | Instantaneous shutdown time (unit: 20 ms, HEX) or tone detection frequency (times, HEX) | - | 0x00 | 0x00 | 0x05 | XB | 27 |
| | | 6 | | | | | | | |
| | | 5 | | | | | | | |
| | | 4 | | | | | | | |
| | | 3 | | | | | | | |
| | | 2 | | | | | | | |
| | | 1 | | | | | | | |
| | | 0 | | | | | | | |
| 0e03e8 | 2nd dial tone detection pattern | 7 | | - | 0x08 | 0x00 | 0x00 | XB | 28 |
| | | 6 | Tone type<br>0: Single<br>1: Dual | | | | | | |
| | | 5 | | | | | | | |
| | | 4 | 2nd dial tone detection pattern<br>1: 155 ±65 Hz<br>2: 375 ±125 Hz<br>3: 400 ±90 Hz<br>4: 400 ±100 Hz<br>5: 420 ±90 Hz<br>6: 425 ±75 Hz<br>7: 425 ±95 Hz<br>8: 425 ±125 Hz<br>9: 430 ±90 Hz<br>10: 435 ±85 Hz<br>11: 440 ±90 Hz<br>12: 445 ±125 Hz<br>13: 450 ±50 Hz<br>14: 450 ±70 Hz<br>15: 450 ±100 Hz<br>16: 450 ±120 Hz<br>17: 460 ±140 Hz<br>18: 465 ±205 Hz<br>19: 475 ±175 Hz<br>20: 480 ±90 Hz<br>21: 480 ±190 Hz<br>22: 1155 ±25 Hz | | | | | |
| | | 3 | | | | | | | |
| | | 2 | | | | | | | |
| | | 1 | | | | | | | |
| | | 0 | | | | | | | |
| 0e03e9 | 2nd dial tone detection time | 7 | 2nd dial tone detection time or ON time max. value (unit: 20 ms, HEX) | - | 0x08 | 0x00 | 0x00 | XB | 29 |
| | | 6 | | | | | | | |
| | | 5 | | | | | | | |
| | | 4 | | | | | | | |
| | | 3 | | | | | | | |
| | | 2 | | | | | | | |
| | | 1 | | | | | | | |
| | | 0 | | | | | | | |
| 0e03ea | 2nd dial tone ON time min. value | 7 | 2nd dial tone ON time min. value (unit: 20 ms, HEX) | - | 0x02 | 0x00 | 0x00 | XB | 2A |
| | | 6 | | | | | | | |
| | | 5 | | | | | | | |
| | | 4 | | | | | | | |
| | | 3 | | | | | | | |
| | | 2 | | | | | | | |
| | | 1 | | | | | | | |
| | | 0 | | | | | | | |
| 0e03eb | 2nd dial tone OFF time max. value | 7 | 2nd dial tone OFF time max. value (unit: 20 ms, HEX) | - | 0x0a | 0x00 | 0x00 | XB | 2B |

| Address | Items | Bit No | Contents | Setting | Default | | | CSRC | |
|---|---|---|---|---|---|---|---|---|---|
| | | | | | Japan | North America | Europe | Command | Parameter |
| | | 6 | | | | | | | |
| | | 5 | | | | | | | |
| | | 4 | | | | | | | |
| | | 3 | | | | | | | |
| | | 2 | | | | | | | |
| | | 1 | | | | | | | |
| | | 0 | | | | | | | |
| 0e03ec | 2nd dial tone OFF time min. value | 7 | 2nd dial tone OFF time min. value (unit: 20 ms, HEX) | - | 0x04 | 0x00 | 0x00 | XB | 2C |
| | | 6 | | | | | | | |
| | | 5 | | | | | | | |
| | | 4 | | | | | | | |
| | | 3 | | | | | | | |
| | | 2 | | | | | | | |
| | | 1 | | | | | | | |
| | | 0 | | | | | | | |
| 0e03ed | 2nd dial tone waiting time | 7 | 2nd dial tone waiting time or pre-pause time (unit: 1 sec, HEX) | - | 0x03 | 0x03 | 0x03 | XB | 2D |
| | | 6 | | | | | | | |
| | | 5 | | | | | | | |
| | | 4 | | | | | | | |
| | | 3 | | | | | | | |
| | | 2 | | | | | | | |
| | | 1 | | | | | | | |
| | | 0 | | | | | | | |
| 0e03ee | 2nd dial tone instantaneous break detection time | 7 | Instantaneous shutdown detection time (unit: 20 ms, HEX) or tone detection frequency (times, HEX) | - | 0x03 | 0x00 | 0x00 | XB | 2E |
| | | 6 | | | | | | | |
| | | 5 | | | | | | | |
| | | 4 | | | | | | | |
| | | 3 | | | | | | | |
| | | 2 | | | | | | | |
| | | 1 | | | | | | | |
| | | 0 | | | | | | | |
| 0e03ef | 3rd dial tone detection pattern | 7 | | - | 0x00 | 0x00 | 0x00 | XB | 2F |
| | | 6 | Tone type<br>0: Single<br>1: Dual | | | | | | |
| | | 5 | | | | | | | |
| | | 4 | 3 RD dial tone detection pattern<br>1: 155 ±65 Hz<br>2: 375 ±125 Hz<br>3: 400 ±90 Hz<br>4: 400 ±100 Hz<br>5: 420 ±90 Hz<br>6: 425 ±75 Hz<br>7: 425 ±95 Hz<br>8: 425 ±125 Hz<br>9: 430 ±90 Hz<br>10: 435 ±85 Hz<br>11: 440 ±90 Hz<br>12: 445 ±125 Hz<br>13: 450 ±50 Hz<br>14: 450 ±70 Hz<br>15: 450 ±100 Hz<br>16: 450 ±120 Hz<br>17: 460 ±140 Hz<br>18: 465 ±205 Hz<br>19: 475 ±175 Hz<br>20: 480 ±90 Hz<br>21: 480 ±190 Hz<br>22: 1155 ±25 Hz | | | | | |
| | | 3 | | | | | | | |
| | | 2 | | | | | | | |
| | | 1 | | | | | | | |
| | | 0 | | | | | | | |

### 5.28.4 0e03f#

| Address | Items | Bit No | Contents | Setting | Default | | | CSRC | |
|---|---|---|---|---|---|---|---|---|---|
| | | | | | Japan | North America | Europe | Command | Parameter |
| 0e03f0 | Busy dial tone detection pattern | 7 | | - | 0x08 | 0x55 | 0x09 | XB | 30 |
| | | 6 | Tone type<br>0: Single<br>1: Dual | | | | | | |
| | | 5 | | | | | | | |
| | | 4 | Busy dial tone detection pattern<br>1: 155 ±65 Hz<br>2: 375 ±125 Hz<br>3: 400 ±90 Hz<br>4: 400 ±100 Hz<br>5: 420 ±90 Hz<br>6: 425 ±75 Hz<br>7: 425 ±95 Hz<br>8: 425 ±125 Hz<br>9: 430 ±90 Hz<br>10: 435 ±85 Hz<br>11: 440 ±90 Hz<br>12: 445 ±125 Hz<br>13: 450 ±50 Hz<br>14: 450 ±70 Hz<br>15: 450 ±100 Hz<br>16: 450 ±120 Hz<br>17: 460 ±140 Hz<br>18: 465 ±205 Hz<br>19: 475 ±175 Hz<br>20: 480 ±90 Hz<br>21: 480 ±190 Hz<br>22: 1155 ±25 Hz | | | | | |
| | | 3 | | | | | | | |
| | | 2 | | | | | | | |
| | | 1 | | | | | | | |
| | | 0 | | | | | | | |
| 0e03f1 | Busy tone ON time max. value | 7 | Busy tone ON time max. value (unit: 20 ms, HEX) | - | 0x1e | 0x1e | 0x00 | XB | 31 |
| | | 6 | | | | | | | |
| | | 5 | | | | | | | |
| | | 4 | | | | | | | |
| | | 3 | | | | | | | |
| | | 2 | | | | | | | |
| | | 1 | | | | | | | |
| | | 0 | | | | | | | |
| 0e03f2 | Busy tone ON time min. value | 7 | Busy tone ON time min. value (unit: 20 ms, HEX) | - | 0x14 | 0x14 | 0x00 | XB | 32 |
| | | 6 | | | | | | | |
| | | 5 | | | | | | | |
| | | 4 | | | | | | | |
| | | 3 | | | | | | | |
| | | 2 | | | | | | | |
| | | 1 | | | | | | | |
| | | 0 | | | | | | | |
| 0e03f3 | Busy tone OFF time max. value | 7 | Busy tone OFF time max. value (unit: 20 ms, HEX) | - | 0x1e | 0x1e | 0x00 | XB | 33 |
| | | 6 | | | | | | | |
| | | 5 | | | | | | | |
| | | 4 | | | | | | | |
| | | 3 | | | | | | | |
| | | 2 | | | | | | | |
| | | 1 | | | | | | | |
| | | 0 | | | | | | | |
| 0e03f4 | Busy tone OFF time min. value | 7 | Busy tone OFF time min. value (unit: 20 ms, HEX) | - | 0x14 | 0x14 | 0x00 | XB | 34 |
| | | 6 | | | | | | | |
| | | 5 | | | | | | | |
| | | 4 | | | | | | | |
| | | 3 | | | | | | | |
| | | 2 | | | | | | | |
| | | 1 | | | | | | | |
| | | 0 | | | | | | | |

| Address | Items | Bit No | Contents | Setting | Default | | | CSRC | |
|---|---|---|---|---|---|---|---|---|---|
| | | | | | Japan | North America | Europe | Command | Parameter |
| 0e03f5 | Ringer detection pattern | 7 | Custom mode<br>0: OFF (in accordance with bits 3-0)<br>1: ON (in accordance with bits 5-4) | - | 0x00 | 0x00 | 0x00 | XB | 35 |
| | | 6 | | | | | | | |
| | | 5 | Custom mode ringer detection pattern<br>00: Single<br>01: Double<br>10: Triple<br>*The standard time is configured with DRPD_Custom[].<br>Configure commonly with DRPD_1st[] through 3rd[] to adjust the detection time. | | | | | | |
| | | 4 | | | | | | | |
| | | 3 | Ringer detection pattern<br>0000: Nomal<br>0001: DRPD_Single<br>0010: DRPD_Double<br>0011: DRPD_Triple1<br>0100: DRPD_Triple2<br>0101: DRPD_NZDA1<br>0110: DRPD_NZDA2<br>0111: DRPD_NZDA3<br>1000: DRPD_NZDA4<br>1001: DRPD_Duet<br>*Normal conforms to Ringer[2] through [5] as usual.<br>*For DRPD, configure the margin time (min, max) from the standard time*1. | | | | | | |
| | | 2 | | | | | | | |
| | | 1 | | | | | | | |
| | | 0 | | | | | | | |
| 0e03f6 | Ringer detection frequency upper limits | 7 | Ringer detection frequency upper limit (unit: 1 Hz, HEX) | - | 0x46 | 0x46 | 0x46 | XB | 36 |
| | | 6 | | | | | | | |
| | | 5 | | | | | | | |
| | | 4 | | | | | | | |
| | | 3 | | | | | | | |
| | | 2 | | | | | | | |
| | | 1 | | | | | | | |
| | | 0 | | | | | | | |
| 0e03f7 | Ringer detection frequency lower limits | 7 | Ringer detection frequency lower limit (unit: 1 Hz, HEX) | - | 0x0c | 0x0c | 0x0c | XB | 37 |
| | | 6 | | | | | | | |
| | | 5 | | | | | | | |
| | | 4 | | | | | | | |
| | | 3 | | | | | | | |
| | | 2 | | | | | | | |
| | | 1 | | | | | | | |
| | | 0 | | | | | | | |
| 0e03f8 | Ringer ON time max. value | 7 | Ringer ON time max. value (unit: 20 ms, HEX) | - | 0x00 | 0x00 | 0x00 | XB | 38 |
| | | 6 | | | | | | | |
| | | 5 | | | | | | | |
| | | 4 | | | | | | | |
| | | 3 | | | | | | | |
| | | 2 | | | | | | | |
| | | 1 | | | | | | | |
| | | 0 | | | | | | | |
| 0e03f9 | Ringer ON time min. value | 7 | Ringer ON time min. value (unit: 20 ms, HEX) | - | 0x0a | 0x0a | 0x08 | XB | 39 |
| | | 6 | | | | | | | |
| | | 5 | | | | | | | |
| | | 4 | | | | | | | |
| | | 3 | | | | | | | |
| | | 2 | | | | | | | |

| Address | Items | Bit No | Contents | Setting | Default | | | CSRC | |
|---|---|---|---|---|---|---|---|---|---|
| | | | | | Japan | North America | Europe | Command | Parameter |
| | | 1 | | | | | | | |
| | | 0 | | | | | | | |
| 0e03fa | Ringer OFF time max. value | 7 | Ringer OFF time max. value (unit: 100 ms, HEX) | - | 0x3c | 0x3c | 0x46 | XB | 3A |
| | | 6 | | | | | | | |
| | | 5 | | | | | | | |
| | | 4 | | | | | | | |
| | | 3 | | | | | | | |
| | | 2 | | | | | | | |
| | | 1 | | | | | | | |
| | | 0 | | | | | | | |
| 0e03fb | Ringer OFF time min. value | 7 | Ringer OFF time min. value (unit: 100 ms, HEX) | Utility Mode Special Setting | 0x02 | 0x00 | 0x00 | XB | 3B |
| | | 6 | | | | | | | |
| | | 5 | | | | | | | |
| | | 4 | | | | | | | |
| | | 3 | | | | | | | |
| | | 2 | | | | | | | |
| | | 1 | | | | | | | |
| | | 0 | | | | | | | |
| 0e03fc | DRPD Ringer ON time max. value | 7 | DRPD Ringer ON time max. value (unit: 20 ms, HEX) | - | 0x09 | 0x09 | 0x09 | XB | 3C |
| | | 6 | | | | | | | |
| | | 5 | | | | | | | |
| | | 4 | | | | | | | |
| | | 3 | | | | | | | |
| | | 2 | | | | | | | |
| | | 1 | | | | | | | |
| | | 0 | | | | | | | |
| 0e03fd | DRPD ringer ON time min. value | 7 | DRPD ringer ON time min. value (in 20-ms increments, HEX) | - | 0x09 | 0x09 | 0x09 | XB | 3D |
| | | 6 | | | | | | | |
| | | 5 | | | | | | | |
| | | 4 | | | | | | | |
| | | 3 | | | | | | | |
| | | 2 | | | | | | | |
| | | 1 | | | | | | | |
| | | 0 | | | | | | | |
| 0e03fe | DRPD ringer OFF time max. value | 7 | DRPD ringer OFF time max. value (in 20-ms increments, HEX) | - | 0x09 | 0x09 | 0x09 | XB | 3E |
| | | 6 | | | | | | | |
| | | 5 | | | | | | | |
| | | 4 | | | | | | | |
| | | 3 | | | | | | | |
| | | 2 | | | | | | | |
| | | 1 | | | | | | | |
| | | 0 | | | | | | | |
| 0e03ff | DRPD ringer OFF time min. value | 7 | DRPD ringer OFF time min. value (in 20-ms increments, HEX) | - | 0x09 | 0x09 | 0x09 | XB | 3F |
| | | 6 | | | | | | | |
| | | 5 | | | | | | | |
| | | 4 | | | | | | | |
| | | 3 | | | | | | | |
| | | 2 | | | | | | | |
| | | 1 | | | | | | | |
| | | 0 | | | | | | | |

- *1: DRPD standard time

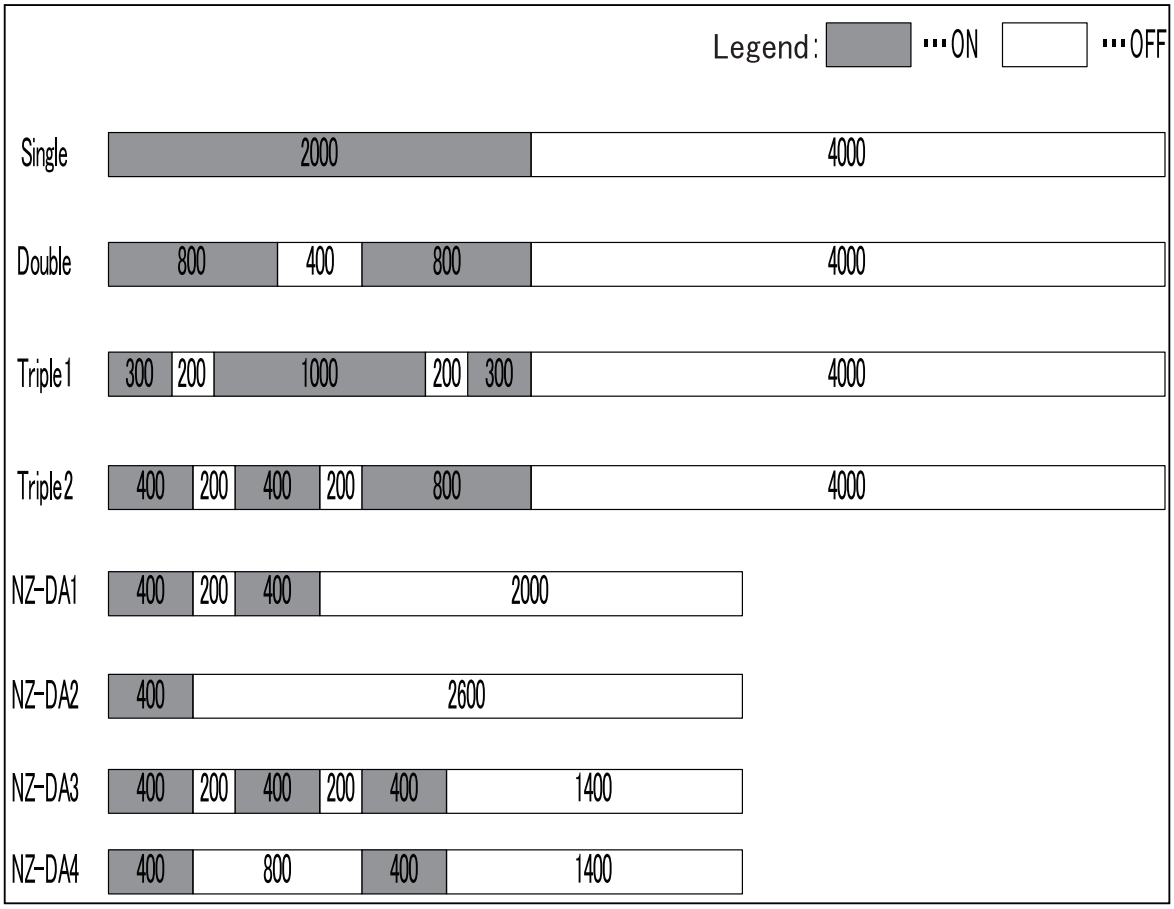


### 5.28.5 0e040#

| Address | Items | Bit No | Contents | Setting | Default | | | CSRC | |
|---|---|---|---|---|---|---|---|---|---|
| | | | | | Japan | North America | Europe | Command | Parameter |
| 0e0400 | DRPD max. adjustment value for max. OFF time | 7 | DRPD max. adjustment value for max. OFF time (100-ms increments, HEX) | - | 0x05 | 0x05 | 0x05 | XB | 40 |
| | | 6 | | | | | | | |
| | | 5 | | | | | | | |
| | | 4 | | | | | | | |
| | | 3 | | | | | | | |
| | | 2 | | | | | | | |
| | | 1 | | | | | | | |
| | | 0 | | | | | | | |
| 0e0401 | DRPD min. adjustment value for max. OFF time | 7 | DRPD ringer min. adjustment value for max. OFF time (100-ms increments, HEX) | - | 0x05 | 0x05 | 0x05 | XB | 41 |
| | | 6 | | | | | | | |
| | | 5 | | | | | | | |
| | | 4 | | | | | | | |
| | | 3 | | | | | | | |
| | | 2 | | | | | | | |
| | | 1 | | | | | | | |
| | | 0 | | | | | | | |
| 0e0402 | DRPD single ring stop detection time | 7 | DRPD single ring stop detection time (100-ms increments, HEX) | - | 0x50 | 0x50 | 0x50 | XB | 42 |
| | | 6 | | | | | | | |
| | | 5 | | | | | | | |
| | | 4 | | | | | | | |
| | | 3 | | | | | | | |
| | | 2 | | | | | | | |
| | | 1 | | | | | | | |
| | | 0 | | | | | | | |
| 0e0403 | DRPD double ring stop detection time | 7 | DRPD double ring stop detection time (100-ms increments, HEX) | - | 0x50 | 0x50 | 0x50 | XB | 43 |
| | | 6 | | | | | | | |
| | | 5 | | | | | | | |

| Address | Items | Bit No | Contents | Setting | Default | | | CSRC | |
|---|---|---|---|---|---|---|---|---|---|
| | | | | | Japan | North America | Europe | Command | Parameter |
| | | 4 | | | | | | | |
| | | 3 | | | | | | | |
| | | 2 | | | | | | | |
| | | 1 | | | | | | | |
| | | 0 | | | | | | | |
| 0e0404 | DRPD Triple1 ring stop detection time | 7 | DRPD Triple1 ring stop detection time (100-ms increments, HEX) | - | 0x50 | 0x50 | 0x50 | XB | 44 |
| | | 6 | | | | | | | |
| | | 5 | | | | | | | |
| | | 4 | | | | | | | |
| | | 3 | | | | | | | |
| | | 2 | | | | | | | |
| | | 1 | | | | | | | |
| | | 0 | | | | | | | |
| 0e0405 | DRPD Triple2 ring stop detection time | 7 | DRPD Triple2 ring stop detection time (100-ms increments, HEX) | - | 0x50 | 0x50 | 0x50 | XB | 45 |
| | | 6 | | | | | | | |
| | | 5 | | | | | | | |
| | | 4 | | | | | | | |
| | | 3 | | | | | | | |
| | | 2 | | | | | | | |
| | | 1 | | | | | | | |
| | | 0 | | | | | | | |
| 0e0406 | DRPD NZ-DA1 ring stop detection time | 7 | DRPD NZ-DA1 ring stop detection time (100-ms increments, HEX) | - | 0x3C | 0x3C | 0x3C | XB | 46 |
| | | 6 | | | | | | | |
| | | 5 | | | | | | | |
| | | 4 | | | | | | | |
| | | 3 | | | | | | | |
| | | 2 | | | | | | | |
| | | 1 | | | | | | | |
| | | 0 | | | | | | | |
| 0e0407 | DRPD NZ-DA2 ring stop detection time | 7 | DRPD NZ-DA2 ring stop detection time (100-ms increments, HEX) | - | 0x3C | 0x3C | 0x3C | XB | 47 |
| | | 6 | | | | | | | |
| | | 5 | | | | | | | |
| | | 4 | | | | | | | |
| | | 3 | | | | | | | |
| | | 2 | | | | | | | |
| | | 1 | | | | | | | |
| | | 0 | | | | | | | |
| 0e0408 | DRPD NZ-DA3 ring stop detection time | 7 | DRPD NZ-DA3 ring stop detection time (100-ms increments, HEX) | - | 0x32 | 0x32 | 0x32 | XB | 48 |
| | | 6 | | | | | | | |
| | | 5 | | | | | | | |
| | | 4 | | | | | | | |
| | | 3 | | | | | | | |
| | | 2 | | | | | | | |
| | | 1 | | | | | | | |
| | | 0 | | | | | | | |
| 0e0409 | DRPD NZ-DA4 ring stop detection time | 7 | DRPD NZ-DA4 ring stop detection time (100-ms increments, HEX) | - | 0x32 | 0x32 | 0x32 | XB | 49 |
| | | 6 | | | | | | | |
| | | 5 | | | | | | | |
| | | 4 | | | | | | | |
| | | 3 | | | | | | | |
| | | 2 | | | | | | | |
| | | 1 | | | | | | | |
| | | 0 | | | | | | | |
| 0e040a | Custom 1s ringer ON time specified value | 7 | Custom 1st ringer ON time specified value (100-ms increments, HEX) | - | 0x00 | 0x00 | 0x00 | XB | 4A |
| | | 6 | | | | | | | |

| Address | Items | Bit No | Contents | Setting | Default | | | CSRC | |
|---|---|---|---|---|---|---|---|---|---|
| | | | | | Japan | North America | Europe | Command | Parameter |
| | | 5 | | | | | | | |
| | | 4 | | | | | | | |
| | | 3 | | | | | | | |
| | | 2 | | | | | | | |
| | | 1 | | | | | | | |
| | | 0 | | | | | | | |
| 0e040b | Custom 1st ringer OFF time specified value | 7 | Custom 1st ringer OFF time specified value (100-ms increments, HEX) | - | 0x00 | 0x00 | 0x00 | XB | 4B |
| | | 6 | | | | | | | |
| | | 5 | | | | | | | |
| | | 4 | | | | | | | |
| | | 3 | | | | | | | |
| | | 2 | | | | | | | |
| | | 1 | | | | | | | |
| | | 0 | | | | | | | |
| 0e040c | Custom 2nd ringer ON time specified value | 7 | Custom 2nd ringer ON time specified value (100-ms increments, HEX) | - | 0x00 | 0x00 | 0x00 | XB | 4C |
| | | 6 | | | | | | | |
| | | 5 | | | | | | | |
| | | 4 | | | | | | | |
| | | 3 | | | | | | | |
| | | 2 | | | | | | | |
| | | 1 | | | | | | | |
| | | 0 | | | | | | | |
| 0e040d | Custom 2nd ringer OFF time specified value | 7 | Custom 2nd ringer OFF time specified value (100-ms increments, HEX) | - | 0x00 | 0x00 | 0x00 | XB | 4D |
| | | 6 | | | | | | | |
| | | 5 | | | | | | | |
| | | 4 | | | | | | | |
| | | 3 | | | | | | | |
| | | 2 | | | | | | | |
| | | 1 | | | | | | | |
| | | 0 | | | | | | | |
| 0e040e | Custom 3rd ringer ON time specified value | 7 | Custom 3rd ringer ON time specified value (100-ms increments, HEX) | - | 0x00 | 0x00 | 0x00 | XB | 4E |
| | | 6 | | | | | | | |
| | | 5 | | | | | | | |
| | | 4 | | | | | | | |
| | | 3 | | | | | | | |
| | | 2 | | | | | | | |
| | | 1 | | | | | | | |
| | | 0 | | | | | | | |
| 0e040f | Custom 3rd ringer OFF time specified value | 7 | Custom 3rd ringer OFF time specified value (100-ms increments, HEX) | - | 0x00 | 0x00 | 0x00 | XB | 4F |
| | | 6 | | | | | | | |
| | | 5 | | | | | | | |
| | | 4 | | | | | | | |
| | | 3 | | | | | | | |
| | | 2 | | | | | | | |
| | | 1 | | | | | | | |
| | | 0 | | | | | | | |

### 5.28.6 0e041#

| Address | Items | Bit No | Contents | Setting | Default | | | CSRC | |
|---|---|---|---|---|---|---|---|---|---|
| | | | | | Japan | North America | Europe | Command | Parameter |
| 0e0410 | Custom Ring OFF detection time | 7 | Custom Ring OFF detection time (in 100-ms increments, HEX) | - | 0x00 | 0x00 | 0x00 | XB | 50 |
| | | 6 | | | | | | | |
| | | 5 | | | | | | | |
| | | 4 | | | | | | | |

| Address | Items | Bit No | Contents | Setting | Default | | | CSRC | |
|---|---|---|---|---|---|---|---|---|---|
| | | | | | Japan | North America | Europe | Command | Parameter |
| | | 3 | | | | | | | |
| | | 2 | | | | | | | |
| | | 1 | | | | | | | |
| | | 0 | | | | | | | |
| 0e0411 | PB dial signal transmission time | 7 | PB dial signal transmission time (unit: 5 ms, HEX) | - | 0x15 | 0x19 | 0x15 | XB | 51 |
| | | 6 | | | | | | | |
| | | 5 | | | | | | | |
| | | 4 | | | | | | | |
| | | 3 | | | | | | | |
| | | 2 | | | | | | | |
| | | 1 | | | | | | | |
| | | 0 | | | | | | | |
| 0e0412 | PB dial inter-digit pause | 7 | PB dial inter digit pause time (unit: 5 ms, HEX) | - | 0x11 | 0x15 | 0x11 | XB | 52 |
| | | 6 | | | | | | | |
| | | 5 | | | | | | | |
| | | 4 | | | | | | | |
| | | 3 | | | | | | | |
| | | 2 | | | | | | | |
| | | 1 | | | | | | | |
| | | 0 | | | | | | | |
| 0e0413 | 10 pps pulse dial time | 7 | 10 pps pulse dial time | - | 0x0F | 0x12 | 0x12 | XB | 53 |
| | | 6 | | | | | | | |
| | | 5 | | | | | | | |
| | | 4 | | | | | | | |
| | | 3 | | | | | | | |
| | | 2 | | | | | | | |
| | | 1 | | | | | | | |
| | | 0 | | | | | | | |
| 0e0414 | 10 pps pulse dial break time | 7 | 10 pps pulse dial break time | - | 0x1F | 0x1C | 0x1C | XB | 54 |
| | | 6 | | | | | | | |
| | | 5 | | | | | | | |
| | | 4 | | | | | | | |
| | | 3 | | | | | | | |
| | | 2 | | | | | | | |
| | | 1 | | | | | | | |
| | | 0 | | | | | | | |
| 0e0415 | 10 pps pulse dial inter-digit pause | 7 | 10 pps pulse dial inter digit pause (unit: 10 ms, HEX) | - | 0x68 | 0x68 | 0x5e | XB | 55 |
| | | 6 | | | | | | | |
| | | 5 | | | | | | | |
| | | 4 | | | | | | | |
| | | 3 | | | | | | | |
| | | 2 | | | | | | | |
| | | 1 | | | | | | | |
| | | 0 | | | | | | | |
| 0e0416 | 20 pps pulse dial time | 7 | 20 pps pulse dial time | - | 0x07 | 0x09 | 0x09 | XB | 56 |
| | | 6 | | | | | | | |
| | | 5 | | | | | | | |
| | | 4 | | | | | | | |
| | | 3 | | | | | | | |
| | | 2 | | | | | | | |
| | | 1 | | | | | | | |
| | | 0 | | | | | | | |
| 0e0417 | 20 pps pulse dial break time | 7 | 20 pps pulse dial break time | - | 0x10 | 0x0E | 0x0E | XB | 57 |
| | | 6 | | | | | | | |
| | | 5 | | | | | | | |

| Address | Items | Bit No | Contents | Setting | Default | | | CSRC | |
|---|---|---|---|---|---|---|---|---|---|
| | | | | | Japan | North America | Europe | Command | Parameter |
| | | 4 | | | | | | | |
| | | 3 | | | | | | | |
| | | 2 | | | | | | | |
| | | 1 | | | | | | | |
| | | 0 | | | | | | | |
| 0e0418 | 20 pps pulse dial inter-digit pause | 7 | 20 pps pulse dial inter digit pause (unit: 10 ms, HEX) | - | 0x59 | 0x40 | 0x5c | XB | 58 |
| | | 6 | | | | | | | |
| | | 5 | | | | | | | |
| | | 4 | | | | | | | |
| | | 3 | | | | | | | |
| | | 2 | | | | | | | |
| | | 1 | | | | | | | |
| | | 0 | | | | | | | |
| 0e0419 | PB signal transmission level | 7 | PB signal transmission level (unit: 1 dBm, HEX) | Utility Mode Special Setting | 0x0a | 0x0a | 0x06 | XB | 59 |
| | | 6 | | | | | | | |
| | | 5 | | | | | | | |
| | | 4 | | | | | | | |
| | | 3 | | | | | | | |
| | | 2 | | | | | | | |
| | | 1 | | | | | | | |
| | | 0 | | | | | | | |
| 0e041a | PB signal level difference (HL) | 7 | PB signal level difference (HL) (unit: 0.5 dBm, HEX) | Utility Mode Special Setting | 0x04 | 0x04 | 0x04 | XB | 5A |
| | | 6 | | | | | | | |
| | | 5 | | | | | | | |
| | | 4 | | | | | | | |
| | | 3 | | | | | | | |
| | | 2 | | | | | | | |
| | | 1 | | | | | | | |
| | | 0 | | | | | | | |
| 0e041b | DCLOOP integration time at CML OFF | 7 | DCLOOP integration time at CML relay OFF (unit: 5 ms, HEX) (Lower limit 20 ms) | - | 0x50 | 0x50 | 0x50 | XB | 5B |
| | | 6 | | | | | | | |
| | | 5 | | | | | | | |
| | | 4 | | | | | | | |
| | | 3 | | | | | | | |
| | | 2 | | | | | | | |
| | | 1 | | | | | | | |
| | | 0 | | | | | | | |
| 0e041c | DCLOOP integration time at CML ON | 7 | DCLOOP integration time at CML relay ON (unit: 5 ms, HEX) (Lower limit 20 ms) | - | 0x10 | 0x10 | 0x10 | XB | 5C |
| | | 6 | | | | | | | |
| | | 5 | | | | | | | |
| | | 4 | | | | | | | |
| | | 3 | | | | | | | |
| | | 2 | | | | | | | |
| | | 1 | | | | | | | |
| | | 0 | | | | | | | |
| 0e041d | Pause time | 7 | | Utility Mode Special Setting (0-2) | 0x01 | 0x01 | 0x01 | XB | 5D |
| | | 6 | | | | | | | |
| | | 5 | | | | | | | |
| | | 4 | | | | | | | |
| | | 3 | | | | | | | |
| | | 2 | Pause time (unit:sec, HEX) | | | | | | |
| | | 1 | | | | | | | |
| | | 0 | | | | | | | |
| 0e041e | DC-LOOP check mode | 7 | DC-LOOP check<br>0: No<br>1: Always | Utility Mode Special Setting (6,7) | 0x00 | 0x00 | 0x00 | XB | 5E |

| Address | Items | Bit No | Contents | Setting | Default | | | CSRC | |
|---|---|---|---|---|---|---|---|---|---|
| | | | | | Japan | North America | Europe | Command | Parameter |
| | | 6 | | | | | | | |
| | | 5 | | | | | | | |
| | | 4 | | | | | | | |
| | | 3 | | | | | | | |
| | | 2 | | | | | | | |
| | | 1 | | | | | | | |
| | | 0 | | | | | | | |
| 0e041f | DC-LOOP waiting time | 7 | DC-LOOP waiting time (unit: 100 ms, HEX) | - | 0x00 | 0x00 | 0x00 | XB | 5F |
| | | 6 | | | | | | | |
| | | 5 | | | | | | | |
| | | 4 | | | | | | | |
| | | 3 | | | | | | | |
| | | 2 | | | | | | | |
| | | 1 | | | | | | | |
| | | 0 | | | | | | | |

### 5.28.7 0e042#

| Address | Items | Bit No | Contents | Setting | Default | | | CSRC | |
|---|---|---|---|---|---|---|---|---|---|
| | | | | | Japan | North America | Europe | Command | Parameter |
| 0e0420 | DC-LOOP instantaneous break allowable time (ph.A) | 7 | DC-LOOP instantaneous break allowable time (unit: 10 ms, HEX) (at the time of calling, CML ON to end of dialing) | - | 0x00 | 0x00 | 0x00 | XB | 60 |
| | | 6 | | | | | | | |
| | | 5 | | | | | | | |
| | | 4 | | | | | | | |
| | | 3 | | | | | | | |
| | | 2 | | | | | | | |
| | | 1 | | | | | | | |
| | | 0 | | | | | | | |
| 0e0421 | DC-LOOP instantaneous break allowable time (ph.B) | 7 | DC-LOOP instantaneous break allowable time (unit: 10ms, HEX) (after completion of dialing and after CML ON at the time of reception) | - | 0x00 | 0x00 | 0x00 | XB | 61 |
| | | 6 | | | | | | | |
| | | 5 | | | | | | | |
| | | 4 | | | | | | | |
| | | 3 | | | | | | | |
| | | 2 | | | | | | | |
| | | 1 | | | | | | | |
| | | 0 | | | | | | | |
| 0e0422 | Dial Mode<br>RING DET mode | 7 | | Utility Mode (0,1)<br>Utility Mode Special Setting (4,5) | 0x12 | 0x10 | 0x10 | XB | 62 |
| | | 6 | | | | | | | |
| | | 5 | RING detection mode<br>01: No. of times<br>10: Time | | | | | | |
| | | 4 | | | | | | | |
| | | 3 | Pulse format<br>00: General<br>01: SW<br>10: NO | | | | | | |
| | | 2 | | | | | | | |
| | | 1 | Dialing method<br>00: PB<br>01: 10pps<br>10: 20pps<br>11: 16pps | | | | | | |
| | | 0 | | | | | | | |
| 0e0423 | 1st/2nd DT detection parameter | 7 | | - | 0x00 | 0x00 | 0x00 | XB | 63 |
| | | 6 | | | | | | | |
| | | 5 | | | | | | | |
| | | 4 | | | | | | | |
| | | 3 | At 2nd DT detection DP dialing only | | | | | | |
| | | 2 | | | | | | | |

| Address | Items | Bit No | Contents | Setting | Default | | | CSRC | |
|---|---|---|---|---|---|---|---|---|---|
| | | | | | Japan | North America | Europe | Command | Parameter |
| | | 1 | | | | | | | |
| | | 0 | 1st DT2 type | | | | | | |
| 0e0424 | Tone detection | 7 | | Utility Mode Special Setting (4,5) | 0x11 | 0x11 | 0x01 | XB | 64 |
| | | 6 | | | | | | | |
| | | 5 | 1300 Hz<br>0: No<br>1: Yes | | | | | | |
| | | 4 | Busy Tone<br>0: No<br>1: Yes | | | | | | |
| | | 3 | PBX DT<br>0: No<br>1: Yes | | | | | | |
| | | 2 | 3rd DT<br>0: No<br>1: Yes | | | | | | |
| | | 1 | 2nd DT<br>0: No<br>1: Yes | | | | | | |
| | | 0 | 1st DT<br>0: No<br>1: Yes | | | | | | |
| 0e0425 | No. of busy tone detection times | 7 | No. of busy tone detection times (HEX) | Utility Mode Special Setting | 0x02 | 0x02 | 0x00 | XB | 65 |
| | | 6 | | | | | | | |
| | | 5 | | | | | | | |
| | | 4 | | | | | | | |
| | | 3 | | | | | | | |
| | | 2 | | | | | | | |
| | | 1 | | | | | | | |
| | | 0 | | | | | | | |
| 0e0426 | No. of RING detection times | 7 | No. of RING detection times (times, HEX) | Utility Mode | 0x02 | 0x02 | 0x02 | XB | 66 |
| | | 6 | | | | | | | |
| | | 5 | | | | | | | |
| | | 4 | | | | | | | |
| | | 3 | | | | | | | |
| | | 2 | | | | | | | |
| | | 1 | | | | | | | |
| | | 0 | | | | | | | |
| 0e0427 | RING detection time | 7 | Ring detection time (sec, HEX) | Utility Mode Special Setting | 0x06 | 0x06 | 0x06 | XB | 67 |
| | | 6 | | | | | | | |
| | | 5 | | | | | | | |
| | | 4 | | | | | | | |
| | | 3 | | | | | | | |
| | | 2 | | | | | | | |
| | | 1 | | | | | | | |
| | | 0 | | | | | | | |
| 0e0428 | Remote station response waiting time | 7 | Remote station response waiting time at calling (unit:sec, HEX) | Utility Mode Special Setting | 0x37 | 0x37 | 0x37 | XB | 68 |
| | | 6 | | | | | | | |
| | | 5 | | | | | | | |
| | | 4 | | | | | | | |
| | | 3 | | | | | | | |
| | | 2 | | | | | | | |
| | | 1 | | | | | | | |
| | | 0 | | | | | | | |
| 0e0429 | Answering machine function | 7 | Answering machine CNG detection time (unit: 10 sec, HEX) (1-7) | Utility Mode Special Setting (4) | 0x64 | 0x64 | 0x64 | XB | 69 |
| | | 6 | | | | | | | |
| | | 5 | | | | | | | |

| Address | Items | Bit No | Contents | Setting | Default | | | CSRC | |
|---|---|---|---|---|---|---|---|---|---|
| | | | | | Japan | North America | Europe | Command | Parameter |
| | | 4 | Answer mode<br>0: OFF<br>1: ON | | | | | | |
| | | 3 | Answering machine DC-LOOP detection time (unit: 5 sec, HEX) (1-15) | | | | | | |
| | | 2 | | | | | | | |
| | | 1 | | | | | | | |
| | | 0 | | | | | | | |
| 0e042a-0e042b | Remote reception password<br>*Line 1 only available | 7 | ASCII [2] | Utility Mode | 0x2a 0x20 | 0x2a 0x20 | 0x2a 0x20 | XB | 6a-6B |
| | | 6 | | | | | | | |
| | | 5 | | | | | | | |
| | | 4 | | | | | | | |
| | | 3 | | | | | | | |
| | | 2 | | | | | | | |
| | | 1 | | | | | | | |
| | | 0 | | | | | | | |
| 0e042c | RBT transmission time | 7 | RingBackTone signal transmission time (unit: 1000 ms, HEX) | - | 0x14 | 0x14 | 0x14 | XB | 6C |
| | | 6 | | | | | | | |
| | | 5 | | | | | | | |
| | | 4 | | | | | | | |
| | | 3 | | | | | | | |
| | | 2 | | | | | | | |
| | | 1 | | | | | | | |
| | | 0 | | | | | | | |
| 0e042d | CAR signal ON time max. value | 7 | CAR ON time max. value (unit: 20 ms, HEX) | - | 0x28 | 0x00 | 0x00 | XB | 6D |
| | | 6 | | | | | | | |
| | | 5 | | | | | | | |
| | | 4 | | | | | | | |
| | | 3 | | | | | | | |
| | | 2 | | | | | | | |
| | | 1 | | | | | | | |
| | | 0 | | | | | | | |
| 0e042e | CAR signal ON time min. value | 7 | CAR ON time min. value (unit: 20 ms, HEX) | - | 0x0a | 0x00 | 0x00 | XB | 6E |
| | | 6 | | | | | | | |
| | | 5 | | | | | | | |
| | | 4 | | | | | | | |
| | | 3 | | | | | | | |
| | | 2 | | | | | | | |
| | | 1 | | | | | | | |
| | | 0 | | | | | | | |
| 0e042f | CAR signal OFF time max. value | 7 | CAR OFF time max. value (unit: 20 ms, HEX) | - | 0x28 | 0x00 | 0x00 | XB | 6F |
| | | 6 | | | | | | | |
| | | 5 | | | | | | | |
| | | 4 | | | | | | | |
| | | 3 | | | | | | | |
| | | 2 | | | | | | | |
| | | 1 | | | | | | | |
| | | 0 | | | | | | | |

### 5.28.8 0e043#

| Address | Items | Bit No | Contents | Setting | Default | | | CSRC | |
|---|---|---|---|---|---|---|---|---|---|
| | | | | | Japan | North America | Europe | Command | Parameter |
| 0e0430 | CAR signal OFF time min. value | 7 | CAR OFF time min. value (unit: 20 ms, HEX) | - | 0x0a | 0x00 | 0x00 | XB | 70 |
| | | 6 | | | | | | | |
| | | 5 | | | | | | | |

| Address | Items | Bit No | Contents | Setting | Default | | | CSRC | |
|---|---|---|---|---|---|---|---|---|---|
| | | | | | Japan | North America | Europe | Command | Parameter |
| | | 4 | | | | | | | |
| | | 3 | | | | | | | |
| | | 2 | | | | | | | |
| | | 1 | | | | | | | |
| | | 0 | | | | | | | |
| 0e0431 | No. of CAR signal detection times | 7 | CAR (information receiving terminal start signal) detection frequency (times, HEX) | - | 0x01 | 0x00 | 0x00 | XB | 71 |
| | | 6 | | | | | | | |
| | | 5 | | | | | | | |
| | | 4 | | | | | | | |
| | | 3 | | | | | | | |
| | | 2 | | | | | | | |
| | | 1 | | | | | | | |
| | | 0 | | | | | | | |
| 0e0432 | Caller ID signal waiting time | 7 | ID waiting time after Caller ID/ DIAL IN primary response (unit 1000 ms, HEX) | - | 0x05 | 0x00 | 0x00 | XB | 72 |
| | | 6 | | | | | | | |
| | | 5 | | | | | | | |
| | | 4 | | | | | | | |
| | | 3 | | | | | | | |
| | | 2 | | | | | | | |
| | | 1 | | | | | | | |
| | | 0 | | | | | | | |
| 0e0433 | Remote reception password entry waiting time | 7 | Password signal (DTMF) detection waiting time (unit: 100 ms, HEX) | - | 0x14 | 0x14 | 0x14 | XB | 73 |
| | | 6 | | | | | | | |
| | | 5 | | | | | | | |
| | | 4 | | | | | | | |
| | | 3 | | | | | | | |
| | | 2 | | | | | | | |
| | | 1 | | | | | | | |
| | | 0 | | | | | | | |
| 0e0434 | Normal/number display automatic line distinction function | 7 | Automatic judgment function<br>0: OFF<br>1: ON | - | 0x83 | 0x00 | 0x00 | XB | 74 |
| | | 6 | | | | | | | |
| | | 5 | | | | | | | |
| | | 4 | | | | | | | |
| | | 3 | V23 signal detection waiting time when judged (x1 sec, HEX) | | | | | | |
| | | 2 | | | | | | | |
| | | 1 | | | | | | | |
| | | 0 | | | | | | | |
| 0e0435 | Monitor speaker (Transmission signal sound) | 7 | PB tone monitoring at the time of offhook | Utility Mode (0-6) | 0x03 | 0x03 | 0x03 | XB | 75 |
| | | 6 | Monitor speaker in communication<br>00: OFF<br>01: Up to DIS<br>10: Up to DIS + RBT transmissions<br>11: ON | | | | | | |
| | | 5 | | | | | | | |
| | | 4 | Speaker volume (HEX) (0-8) | | | | | | |
| | | 3 | | | | | | | |
| | | 2 | | | | | | | |
| | | 1 | | | | | | | |
| | | 0 | | | | | | | |
| 0e0436 - 0e043f | Numeric ID [20] | 7 | ASCII [20]<br>When ID is less than 20 digits, justify to the left and insert space at the top. (No NULL terminator) | Utility Mode | ALL 0x20 | ALL 0x20 | ALL 0x20 | XB | 76 |
| | | 6 | | | | | | | |
| | | 5 | | | | | | | |
| | | 4 | | | | | | | |
| | | 3 | | | | | | | |

| Address | Items | Bit No | Contents | Setting | Default | | | CSRC | |
|---|---|---|---|---|---|---|---|---|---|
| | | | | | Japan | North America | Europe | Command | Parameter |
| | | 2 | | | | | | | |
| | | 1 | | | | | | | |
| | | 0 | | | | | | | |

### 5.28.9 0e044#

| Address | Items | Bit No | Contents | Setting | Default | | | CSRC | |
|---|---|---|---|---|---|---|---|---|---|
| | | | | | Japan | North America | Europe | Command | Parameter |
| 0e0440 - 0e0449 | Numeric ID [20] | 7 | ASCII [20]<br>When ID is less than 20 digits, justify to the left and insert space at the top. (No NULL terminator) | Utility Mode | ALL 0x20 | ALL 0x20 | ALL 0x20 | XB | 80-89 |
| | | 6 | | | | | | | |
| | | 5 | | | | | | | |
| | | 4 | | | | | | | |
| | | 3 | | | | | | | |
| | | 2 | | | | | | | |
| | | 1 | | | | | | | |
| | | 0 | | | | | | | |
| 0e044a | PBX connection mode | 7 | | Utility Mode (0-3) | 0x0f | 0x0f | 0x0f | XB | 8A |
| | | 6 | | | | | | | |
| | | 5 | | | | | | | |
| | | 4 | | | | | | | |
| | | 3 | PBX call<br>0000 - 1001: keypad<br>1011: Reserved<br>1100: Reserved<br>1101: Reserved<br>1110: Reserved<br>1111: PBX unconnected | | | | | | |
| | | 2 | | | | | | | |
| | | 1 | | | | | | | |
| | | 0 | | | | | | | |
| 0e044b | Protocol monitor | 7 | | Utility Mode (5) | 0x00 | 0x00 | 0x00 | XB | 8B |
| | | 6 | | | | | | | |
| | | 5 | TEL/FAX switching RBT monitor sound<br>0: OFF<br>1: ON | | | | | | |
| | | 4 | Inhibit the speaker to sound when off-hook key is pressed<br>1: Inhibit<br>0: Not inhibit | | | | | | |
| | | 3 | | | | | | | |
| | | 2 | | | | | | | |
| | | 1 | | | | | | | |
| | | 0 | | | | | | | |
| 0e044c | Reception function (disable) | 7 | | Utility Mode (0-4) | 0x3f | 0x3f | 0x3f | XB | 8C |
| | | 6 | | | | | | | |
| | | 5 | Name display<br>0: Not inhibit<br>1: Inhibit | | | | | | |
| | | 4 | Compulsory Memory RX<br>0: Not inhibit<br>1: Inhibit | | | | | | |
| | | 3 | No. of caller / name display (number display / (display of subscribers for trace-back system))<br>0: Not inhibit<br>1: Inhibit | | | | | | |
| | | 2 | Closed-area communication<br>0: Not inhibit<br>1: Inhibit | | | | | | |
| | | 1 | Remote RX<br>0: Not inhibit<br>1: Inhibit | | | | | | |

| Address | Items | Bit No | Contents | Setting | Default | | | CSRC | |
|---|---|---|---|---|---|---|---|---|---|
| | | | | | Japan | North America | Europe | Command | Parameter |
| | | 0 | Dialin<br>0: Not inhibit<br>1: Disable | | | | | | |
| 0e044d | PBX outside line access code 1 (BCD) | 7 | 1st digit | Utility Mode | 0xff | 0xff | 0xff | XB | 8D |
| | | 6 | | | | | | | |
| | | 5 | | | | | | | |
| | | 4 | | | | | | | |
| | | 3 | 2nd digit | | | | | | |
| | | 2 | | | | | | | |
| | | 1 | | | | | | | |
| | | 0 | | | | | | | |
| 0e044e | PBX outside line access code 2 (BCD) | 7 | 3rd digit | Utility Mode | 0xff | 0xff | 0xff | XB | 8E |
| | | 6 | | | | | | | |
| | | 5 | | | | | | | |
| | | 4 | | | | | | | |
| | | 3 | 4th digit | | | | | | |
| | | 2 | | | | | | | |
| | | 1 | | | | | | | |
| | | 0 | | | | | | | |
| 0e044f | Limit of long size reception | 7 | | - | 0x00 | 0x00 | 0x00 | XB | 8F |
| | | 6 | | | | | | | |
| | | 5 | | | | | | | |
| | | 4 | | | | | | | |
| | | 3 | | | | | | | |
| | | 2 | | | | | | | |
| | | 1 | | | | | | | |
| | | 0 | Limit of long size reception<br>0: Limit<br>1: Unlimited | | | | | | |

### 5.28.10 0e045#

| Address | Items | Bit No | Contents | Setting | Default | | | CSRC | |
|---|---|---|---|---|---|---|---|---|---|
| | | | | | Japan | North America | Europe | Command | Parameter |
| 0e0450 | Max. size of long original received (In the case of 400 dpi or less) | 7 | When the resolution for reception is 400 dpi or less, the size of a long original received that is regarded as an error (The maximum length is a decimal value x 10 mm. 0 is regarded as 1000 mm.) ) | - | 0x64 | 0x64 | 0x64 | XB | 90 |
| | | 6 | | | | | | | |
| | | 5 | | | | | | | |
| | | 4 | | | | | | | |
| | | 3 | | | | | | | |
| | | 2 | | | | | | | |
| | | 1 | | | | | | | |
| | | 0 | | | | | | | |
| 0 e0451 | Max. size of long original received (In the case of 600 dpi) | 7 | When the resolution for reception is 600 dpi, the size of a long original received that is regarded as an error (The maximum length is a decimal value x 10 mm. 0 is regarded as 1000 mm. ) | - | 0x64 | 0x64 | 0x64 | XB | 91 |
| | | 6 | | | | | | | |
| | | 5 | | | | | | | |
| | | 4 | | | | | | | |
| | | 3 | | | | | | | |
| | | 2 | | | | | | | |
| | | 1 | | | | | | | |
| | | 0 | | | | | | | |
| 0e0452 | Voice response output level adjustment | 7 | | - | 0x62 | 0x62 | 0x62 | XB | 92 |
| | | 6 | | | | | | | |
| | | 5 | | | | | | | |
| | | 4 | | | | | | | |
| | | 3 | Voice response volume (HEX)<br>0000: min - 1111: max | | | | | | |
| | | 2 | | | | | | | |

| Address | Items | Bit No | Contents | Setting | Default | | | CSRC | |
|---|---|---|---|---|---|---|---|---|---|
| | | | | | Japan | North America | Europe | Command | Parameter |
| | | 1 | | | | | | | |
| | | 0 | | | | | | | |
| 0e0453 | Monitor speaker (Received signal sound) | 7 | | Utility Mode (0-4) | 0x04 | 0x04 | 0x04 | XB | 93 |
| | | 6 | | | | | | | |
| | | 5 | | | | | | | |
| | | 4 | Speaker volume (HEX) (0-8) | | | | | | |
| | | 3 | | | | | | | |
| | | 2 | | | | | | | |
| | | 1 | | | | | | | |
| | | 0 | | | | | | | |
| 0e0454 - 0e0459 | Reserved area | 7 | | - | ALL 0x00 | ALL 0x00 | ALL 0x00 | XB | 94 - 99 |
| | | 6 | | | | | | | |
| | | 5 | | | | | | | |
| | | 4 | | | | | | | |
| | | 3 | | | | | | | |
| | | 2 | | | | | | | |
| | | 1 | | | | | | | |
| | | 0 | | | | | | | |

### 5.28.11 0f006#

| Address | Items | Bit No | Contents | Setting | Default | | | CSRC | |
|---|---|---|---|---|---|---|---|---|---|
| | | | | | Japan | North America | Europe | Command | Parameter |
| 0f0060 | Reception main scan line resolution ability [0] | 7 | 400 dpi | - | 0xaa | 0xaa | 0xaa | XH | 20 |
| | | 6 | 300 dpi | | | | | | |
| | | 5 | 200 dpi | | | | | | |
| | | 4 | | | | | | | |
| | | 3 | 16 pels/mm | | | | | | |
| | | 2 | | | | | | | |
| | | 1 | 8 pels/mm | | | | | | |
| | | 0 | | | | | | | |
| 0f0061 | Reception main scan line resolution ability [1] | 7 | | - | 0x01 | 0x01 | 0x01 | XH | 21 |
| | | 6 | | | | | | | |
| | | 5 | | | | | | | |
| | | 4 | | | | | | | |
| | | 3 | | | | | | | |
| | | 2 | (1200 dpi) | | | | | | |
| | | 1 | 800 dpi | | | | | | |
| | | 0 | 600 dpi | | | | | | |
| 0f0062 | Reception sub scanning resolution ability [0] | 7 | 400 dpi | - | 0xbb | 0xbb | 0xbb | XH | 22 |
| | | 6 | 300 dpi | | | | | | |
| | | 5 | 200 dpi | | | | | | |
| | | 4 | 100 dpi | | | | | | |
| | | 3 | 15.4 l/mm | | | | | | |
| | | 2 | | | | | | | |
| | | 1 | 7.7 l/mm | | | | | | |
| | | 0 | 3.85 l/mm | | | | | | |
| 0f0063 | Reception sub scanning resolution ability [1] | 7 | | - | 0x01 | 0x01 | 0x01 | XH | 23 |
| | | 6 | | | | | | | |
| | | 5 | | | | | | | |
| | | 4 | | | | | | | |
| | | 3 | | | | | | | |
| | | 2 | (1200 dpi) | | | | | | |
| | | 1 | 800 dpi | | | | | | |
| | | 0 | 600 dpi | | | | | | |

| Address | Items | Bit No | Contents | Setting | Default | | | CSRC | |
|---|---|---|---|---|---|---|---|---|---|
| | | | | | Japan | North America | Europe | Command | Parameter |
| 0f0064 | Reception coding method ability | 7 | | - | 0x1f | 0x1f | 0x1f | XH | 24 |
| | | 6 | | | | | | | |
| | | 5 | (JPEG) | | | | | | |
| | | 4 | JBIG | | | | | | |
| | | 3 | MMR | | | | | | |
| | | 2 | MR | | | | | | |
| | | 1 | MH | | | | | | |
| | | 0 | THRU | | | | | | |
| 0f0065 | Received document width ability | 7 | | - | 0x0e | 0x0e | 0x0e | XH | 25 |
| | | 6 | | | | | | | |
| | | 5 | (Legal) | | | | | | |
| | | 4 | (Letter) | | | | | | |
| | | 3 | A3 | | | | | | |
| | | 2 | B4 | | | | | | |
| | | 1 | A4 | | | | | | |
| | | 0 | (A5) | | | | | | |
| 0f0066 | Received document length ability | 7 | | - | 0x46 | 0x46 | 0x46 | XH | 26 |
| | | 6 | Unlimited | | | | | | |
| | | 5 | (Legal) | | | | | | |
| | | 4 | (Letter) | | | | | | |
| | | 3 | | | | | | | |
| | | 2 | B4 | | | | | | |
| | | 1 | A4 | | | | | | |
| | | 0 | (A5) | | | | | | |
| 0f0067 | Reception speed ability [0] | 7 | | - | 0x1b | 0x1b | 0x1b | XH | 27 |
| | | 6 | | | | | | | |
| | | 5 | | | | | | | |
| | | 4 | V.29-96 | | | | | | |
| | | 3 | V.29-72 | | | | | | |
| | | 2 | | | | | | | |
| | | 1 | V.27-48 | | | | | | |
| | | 0 | V.27-24 | | | | | | |
| 0f0068 | Reception speed ability [1] | 7 | V.17-144 | - | 0xfc | 0xfc | 0xfc | XH | 28 |
| | | 6 | V.17-120 | | | | | | |
| | | 5 | V.17-96 | | | | | | |
| | | 4 | V.17-72 | | | | | | |
| | | 3 | V.33-144 | | | | | | |
| | | 2 | V.33-120 | | | | | | |
| | | 1 | (TCM-96) | | | | | | |
| | | 0 | (TCM-72) | | | | | | |
| 0f0069 | Reception speed ability [2] | 7 | V.34-192 | - | 0xff | 0xff | 0xff | XH | 29 |
| | | 6 | V.34-168 | | | | | | |
| | | 5 | V.34-144 | | | | | | |
| | | 4 | V.34-120 | | | | | | |
| | | 3 | V.34-96 | | | | | | |
| | | 2 | V.34-72 | | | | | | |
| | | 1 | V.34-48 | | | | | | |
| | | 0 | V.34-24 | | | | | | |
| 0f006a | Reception speed ability [3] | 7 | | - | 0x3f | 0x3f | 0x3f | XH | 2A |
| | | 6 | | | | | | | |
| | | 5 | V.34-336 | | | | | | |
| | | 4 | V.34-312 | | | | | | |
| | | 3 | V.34-288 | | | | | | |
| | | 2 | V.34-264 | | | | | | |
| | | 1 | V.34-240 | | | | | | |

| Address | Items | Bit No | Contents | Setting | Default | | | CSRC | |
|---|---|---|---|---|---|---|---|---|---|
| | | | | | Japan | North America | Europe | Command | Parameter |
| | | 0 | V.34-216 | | | | | | |
| 0f006b | Reception MSLT ability | 7 | T3.85 or 200 x 100dpi (0-40) ms unit | - | 0x05 | 0x05 | 0x05 | XH | 2B |
| | | 6 | | | | | | | |
| | | 5 | | | | | | | |
| | | 4 | | | | | | | |
| | | 3 | | | | | | | |
| | | 2 | | | | | | | |
| | | 1 | | | | | | | |
| | | 0 | | | | | | | |
| 0f006c | Reception MSLT ability | 7 | T7.7 or 200 x 200dpi (0-40) ms unit | - | 0x05 | 0x05 | 0x05 | XH | 2C |
| | | 6 | | | | | | | |
| | | 5 | | | | | | | |
| | | 4 | | | | | | | |
| | | 3 | | | | | | | |
| | | 2 | | | | | | | |
| | | 1 | | | | | | | |
| | | 0 | | | | | | | |
| 0f006d | Reception MSLT ability | 7 | T11.55 or 300 x 300dpi (0-40) ms unit | - | 0x05 | 0x05 | 0x05 | XH | 2D |
| | | 6 | | | | | | | |
| | | 5 | | | | | | | |
| | | 4 | | | | | | | |
| | | 3 | | | | | | | |
| | | 2 | | | | | | | |
| | | 1 | | | | | | | |
| | | 0 | | | | | | | |
| 0f006e | Reception MSLT ability | 7 | T15.4 or 400 x 400dpi or 600 x 600dpi (0-40) ms unit | - | 0x05 | 0x05 | 0x05 | XH | 2E |
| | | 6 | | | | | | | |
| | | 5 | | | | | | | |
| | | 4 | | | | | | | |
| | | 3 | | | | | | | |
| | | 2 | | | | | | | |
| | | 1 | | | | | | | |
| | | 0 | | | | | | | |
| 0f006f | Reception ECM ability | 7 | | - | 0x01 | 0x01 | 0x01 | XH | 2F |
| | | 6 | | | | | | | |
| | | 5 | | | | | | | |
| | | 4 | | | | | | | |
| | | 3 | | | | | | | |
| | | 2 | | | | | | | |
| | | 1 | | | | | | | |
| | | 0 | ECM reception capability<br>0: OFF<br>1: ON | | | | | | |

### 5.28.12 0f007#

| Address | Items | Bit No | Contents | Setting | Default | | | CSRC | |
|---|---|---|---|---|---|---|---|---|---|
| | | | | | Japan | North America | Europe | Command | Parameter |
| 0f0070 | Reception protocol ability | 7 | | - | 0x11 | 0x11 | 0x11 | XH | 30 |
| | | 6 | | | | | | | |
| | | 5 | | | | | | | |
| | | 4 | V.8/V.34 | | | | | | |
| | | 3 | | | | | | | |
| | | 2 | | | | | | | |
| | | 1 | | | | | | | |

| Address | Items | Bit No | Contents | Setting | Default | | | CSRC | |
|---|---|---|---|---|---|---|---|---|---|
| | | | | | Japan | North America | Europe | Command | Parameter |
| | | 0 | G3S | | | | | | |
| 0f0071 | Reception option frame ability | 7 | | - | 0x07 | 0x07 | 0x07 | XH | 31 |
| | | 6 | | | | | | | |
| | | 5 | | | | | | | |
| | | 4 | (BFT) | | | | | | |
| | | 3 | (BTM) | | | | | | |
| | | 2 | PWD | | | | | | |
| | | 1 | (SEP) | | | | | | |
| | | 0 | SUB | | | | | | |
| 0f0072 - 0f007f | Reserved area | 7 | | - | ALL 0x00 | ALL 0x00 | ALL 0x00 | XH | 32 - 3F |
| | | 6 | | | | | | | |
| | | 5 | | | | | | | |
| | | 4 | | | | | | | |
| | | 3 | | | | | | | |
| | | 2 | | | | | | | |
| | | 1 | | | | | | | |
| | | 0 | | | | | | | |

### 5.28.13 10006#

| Address | Items | Bit No | Contents | Setting | Default | | | CSRC | |
|---|---|---|---|---|---|---|---|---|---|
| | | | | | Japan | North America | Europe | Command | Parameter |
| 100060 | Transmission main scan line resolution instruction [0] | 7 | 400 dpi | - | 0x22 | 0x22 | 0x22 | XH | 60 |
| | | 6 | 300 dpi | | | | | | |
| | | 5 | 200 dpi | | | | | | |
| | | 4 | | | | | | | |
| | | 3 | 16 pels/mm | | | | | | |
| | | 2 | | | | | | | |
| | | 1 | 8 pels/mm | | | | | | |
| | | 0 | | | | | | | |
| 100061 | Transmission main scan line resolution instruction [1] | 7 | | - | 0x01 | 0x01 | 0x01 | XH | 61 |
| | | 6 | | | | | | | |
| | | 5 | | | | | | | |
| | | 4 | | | | | | | |
| | | 3 | | | | | | | |
| | | 2 | (1200 dpi) | | | | | | |
| | | 1 | 800 dpi | | | | | | |
| | | 0 | 600 dpi | | | | | | |
| 100062 | Transmission sub scanning resolution instruction [0] | 7 | 400 dpi | - | 0x11 | 0x11 | 0x11 | XH | 62 |
| | | 6 | 300 dpi | | | | | | |
| | | 5 | 200 dpi | | | | | | |
| | | 4 | 100 dpi | | | | | | |
| | | 3 | 15.4 l/mm | | | | | | |
| | | 2 | | | | | | | |
| | | 1 | 7.7 l/mm | | | | | | |
| | | 0 | 3.85 l/mm | | | | | | |
| 100063 | Transmission sub scanning resolution instruction [1] | 7 | | - | 0x01 | 0x01 | 0x01 | XH | 63 |
| | | 6 | | | | | | | |
| | | 5 | | | | | | | |
| | | 4 | | | | | | | |
| | | 3 | | | | | | | |
| | | 2 | (1200 dpi) | | | | | | |
| | | 1 | 800 dpi | | | | | | |
| | | 0 | 600 dpi | | | | | | |

| Address | Items | Bit No | Contents | Setting | Default | | | CSRC | |
|---|---|---|---|---|---|---|---|---|---|
| | | | | | Japan | North America | Europe | Command | Parameter |
| 100064 | Transmission coding method instruction | 7 | | - | 0x1f | 0x1f | 0x1f | XH | 64 |
| | | 6 | | | | | | | |
| | | 5 | (JPEG) | | | | | | |
| | | 4 | JBIG | | | | | | |
| | | 3 | MMR | | | | | | |
| | | 2 | MR | | | | | | |
| | | 1 | MH | | | | | | |
| | | 0 | THRU | | | | | | |
| 100065 | Transmission document width instruction | 7 | | - | 0x0e | 0x0e | 0x0e | XH | 65 |
| | | 6 | | | | | | | |
| | | 5 | (Legal) | | | | | | |
| | | 4 | (Letter) | | | | | | |
| | | 3 | A3 | | | | | | |
| | | 2 | B4 | | | | | | |
| | | 1 | A4 | | | | | | |
| | | 0 | (A5) | | | | | | |
| 100066 | Transmission document length instruction | 7 | | - | 0x46 | 0x46 | 0x46 | XH | 66 |
| | | 6 | Unlimited | | | | | | |
| | | 5 | (Legal) | | | | | | |
| | | 4 | (Letter) | | | | | | |
| | | 3 | | | | | | | |
| | | 2 | B4 | | | | | | |
| | | 1 | A4 | | | | | | |
| | | 0 | (A5) | | | | | | |
| 100067 | Transmission speed instruction [0] | 7 | | - | 0x1b | 0x1b | 0x1b | XH | 67 |
| | | 6 | | | | | | | |
| | | 5 | | | | | | | |
| | | 4 | V.29-96 | | | | | | |
| | | 3 | V.29-72 | | | | | | |
| | | 2 | | | | | | | |
| | | 1 | V.27-48 | | | | | | |
| | | 0 | V.27-24 | | | | | | |
| 100068 | Transmission speed instruction [1] | 7 | V.17-144 | - | 0xf0 | 0xf0 | 0xf0 | XH | 68 |
| | | 6 | V.17-120 | | | | | | |
| | | 5 | V.17-96 | | | | | | |
| | | 4 | V.17-72 | | | | | | |
| | | 3 | V.33-144 | | | | | | |
| | | 2 | V.33-120 | | | | | | |
| | | 1 | (TCM-96) | | | | | | |
| | | 0 | (TCM-72) | | | | | | |
| 100069 | Transmission speed instruction [2] | 7 | V.34-192 | - | 0xff | 0xff | 0xff | XH | 69 |
| | | 6 | V.34-168 | | | | | | |
| | | 5 | V.34-144 | | | | | | |
| | | 4 | V.34-120 | | | | | | |
| | | 3 | V.34-96 | | | | | | |
| | | 2 | V.34-72 | | | | | | |
| | | 1 | V.34-48 | | | | | | |
| | | 0 | V.34-24 | | | | | | |
| 10006a | Transmission speed instruction [3] | 7 | | - | 0x3f | 0x3f | 0x3f | XH | 6A |
| | | 6 | | | | | | | |
| | | 5 | V.34-336 | | | | | | |
| | | 4 | V.34-312 | | | | | | |
| | | 3 | V.34-288 | | | | | | |
| | | 2 | V.34-264 | | | | | | |
| | | 1 | V.34-240 | | | | | | |

| Address | Items | Bit No | Contents | Setting | Default | | | CSRC | |
|---|---|---|---|---|---|---|---|---|---|
| | | | | | Japan | North America | Europe | Command | Parameter |
| | | 0 | V.34-216 | | | | | | |
| 10006b | Transmission MSLT instruction | 7 | T3.85 or 200 x 100dpi (0-40) ms unit | - | 0x05 | 0x05 | 0x05 | XH | 6B |
| | | 6 | | | | | | | |
| | | 5 | | | | | | | |
| | | 4 | | | | | | | |
| | | 3 | | | | | | | |
| | | 2 | | | | | | | |
| | | 1 | | | | | | | |
| | | 0 | | | | | | | |
| 10006c | Transmission MSLT instruction | 7 | T7.7 or 200 x 200dpi (0-40) ms unit | - | 0x05 | 0x05 | 0x05 | XH | 6C |
| | | 6 | | | | | | | |
| | | 5 | | | | | | | |
| | | 4 | | | | | | | |
| | | 3 | | | | | | | |
| | | 2 | | | | | | | |
| | | 1 | | | | | | | |
| | | 0 | | | | | | | |
| 10006d | Transmission MSLT instruction | 7 | T11.55 or 300 x 300dpi (0-40) ms unit | - | 0x05 | 0x05 | 0x05 | XH | 6D |
| | | 6 | | | | | | | |
| | | 5 | | | | | | | |
| | | 4 | | | | | | | |
| | | 3 | | | | | | | |
| | | 2 | | | | | | | |
| | | 1 | | | | | | | |
| | | 0 | | | | | | | |
| 10006e | Transmission MSLT instruction | 7 | T15.4 or 400 x 400dpi or 600 x 600dpi (0-40) ms unit | - | 0x05 | 0x05 | 0x05 | XH | 6E |
| | | 6 | | | | | | | |
| | | 5 | | | | | | | |
| | | 4 | | | | | | | |
| | | 3 | | | | | | | |
| | | 2 | | | | | | | |
| | | 1 | | | | | | | |
| | | 0 | | | | | | | |
| 10006f | Transmission ECM instruction | 7 | | - | 0x01 | 0x01 | 0x01 | XH | 6F |
| | | 6 | | | | | | | |
| | | 5 | | | | | | | |
| | | 4 | | | | | | | |
| | | 3 | | | | | | | |
| | | 2 | | | | | | | |
| | | 1 | ECM transmission frame size<br>0: 256<br>1: 64 | | | | | | |
| | | 0 | ECM transmission instruction<br>0: OFF<br>1: ON | | | | | | |

### 5.28.14 10007#

| Address | Items | Bit No | Contents | Setting | Default | | | CSRC | |
|---|---|---|---|---|---|---|---|---|---|
| | | | | | Japan | North America | Europe | Command | Parameter |
| 100070 | Transmission protocol instruction | 7 | | - | 0x11 | 0x11 | 0x11 | XH | 70 |
| | | 6 | | | | | | | |
| | | 5 | | | | | | | |
| | | 4 | V.8/V.34 | | | | | | |
| | | 3 | | | | | | | |
| | | 2 | | | | | | | |

| Address | Items | Bit No | Contents | Setting | Default | | | CSRC | |
|---|---|---|---|---|---|---|---|---|---|
| | | | | | Japan | North America | Europe | Command | Parameter |
| | | 1 | | | | | | | |
| | | 0 | G3S | | | | | | |
| 100071 | Transmission option frame instruction | 7 | | - | 0x00 | 0x00 | 0x00 | XH | 71 |
| | | 6 | | | | | | | |
| | | 5 | | | | | | | |
| | | 4 | (BFT) | | | | | | |
| | | 3 | (BTM) | | | | | | |
| | | 2 | PWD | | | | | | |
| | | 1 | (SEP) | | | | | | |
| | | 0 | SUB | | | | | | |
| 100072 - 10007f | Reserved area 1 | 7 | | - | ALL 0x00 | ALL 0x00 | ALL 0x00 | XH | 72 - 7F |
| | | 6 | | | | | | | |
| | | 5 | | | | | | | |
| | | 4 | | | | | | | |
| | | 3 | | | | | | | |
| | | 2 | | | | | | | |
| | | 1 | | | | | | | |
| | | 0 | | | | | | | |

## 5.29 Finisher

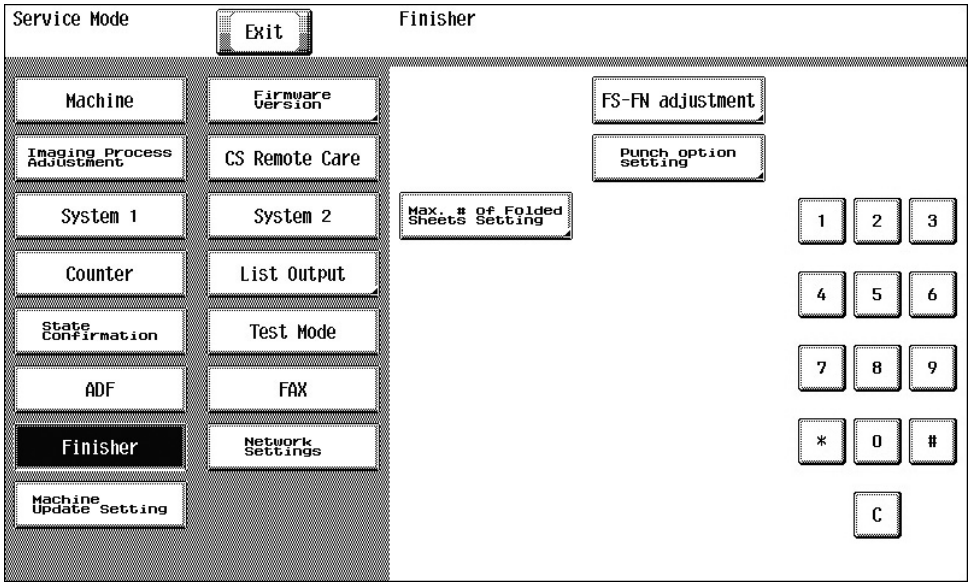


### 5.29.1 FS-FN adjustment - Center Staple Position

#### (1) Use

- Adjust the stapling position for each paper size when printing with the center staple function.
- To adjust the center staple position by making the staple position match the folding position.

#### (2) Setting range

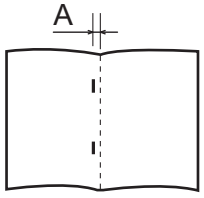


- Width A should fall within the following target.

| | |
|---|---|
| Target | 0 ± 1.0 mm |
| Setting range | -10.0 mm to +10.0 mm (1 step: 0.1 mm) |

### (3) Procedure

**NOTE**

- **After [Half-Fold Position] adjustment, make this [Center Staple Position] adjustment.**

1. Place five sheets of originals on the DF.
2. Make a set of copy in the saddle stitching mode.
3. Check the amount of horizontal deviation (width A) between the staple and the half fold positions on the set of copy.
4. If width A is out of the target, make the following adjustment.
5. Call the Service Mode to the screen.
6. Touch [Finisher] -> [FS-FN adjustment] -> [Center Staple Position].
7. Touch the paper size where staple position is adjusted.
8. Look at the copy and adjust the staple position with the [+] / [-] key.

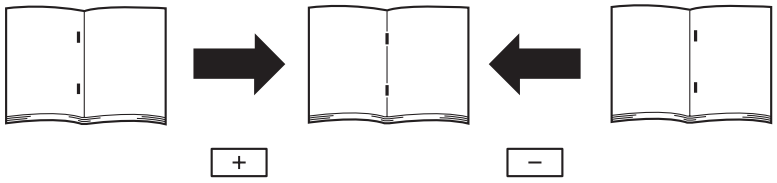


**NOTE**

- **The adjustment setting value used for each paper size is the value set with [ALL] plus the value set for each paper size.**

9. Touch [Test Copy].
10. Select the tray loading paper for the test copy.
11. Touch [3].
12. Touch [Fold & Staple], and press the start key.
13. Check the staple positions deviate.
14. Touch [END] to return to the adjustment screen.
15. Touch [OK] twice.
16. Touch [Exit] on the Service Mode screen.

## 5.29.2 FS-FN adjustment - Half-Fold Position

### (1) Use

- Use this adjustment to adjust the half-fold position in half-fold printing.

### (2) Setting range

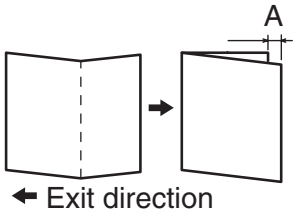


- Width A should fall within the following target.

| | |
|---|---|
| Target | A = Less than 1.0 mm |
| Setting range | -10.0 mm to +10.0 mm (1 step: 0.1 mm) |

### (3) Procedure

1. Place two sheets of originals on the ADF.
2. Make a copy in the folding mode.
3. Fold the copies along the crease.
4. Measure the amount of width A.
5. If width A is out of the target, make the following adjustment.
6. Call the Service Mode to the screen.
7. Touch [Finisher] -> [FS-FN adjustment] -> [Half-Fold Position].
8. Touch the paper size where half-fold position is adjusted.
9. Look at the copy and adjust the half-fold position with the [+] / [-] key.

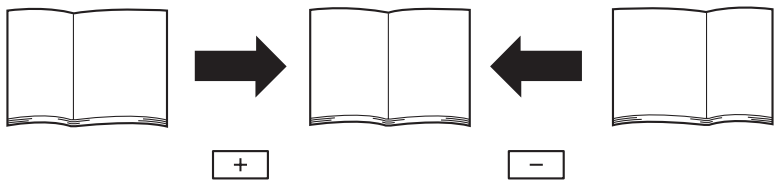


**NOTE**

- **The adjustment setting value used for each paper size is the value set with [ALL] plus the value set for each paper size.**

10. Touch [Test Copy].
11. Select the tray loading paper for the test copy.

12. Touch [3].
13. Touch [Half-Fold], and press the start key.
14. Check the crease positions deviate.
15. Touch [END] to return to the adjustment screen.
16. Touch [OK] twice.
17. Touch [Exit] on the Service Mode screen.

### 5.29.3 FS-FN adjustment - 1st Tri-Fold Adjustment/2nd Tri-Fold Adjustment

#### (1) Use

- To adjust the positions of the 1st Tri-fold and 2nd Tri-fold for the Tri-fold printing.

#### (2) Setting range

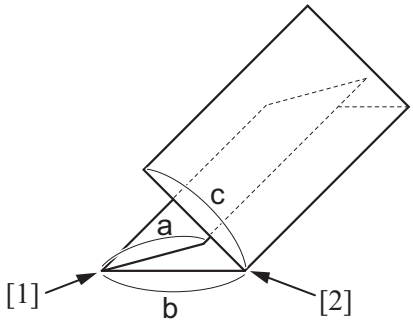


| | | | |
|---|---|---|---|
| [1] | Position of the first tri-fold | [2] | Position of the second tri-fold |

- Check whether the tri-fold widths "a" and "b" of the ejected paper are within the target.

| | | |
|---|---|---|
| Target | A4S | Length a: 95 mm ± 2 mm<br>Length b: 102 mm ± 2 mm |
| | 8.5 x 11S | Length a: 89.4 mm ± 2 mm<br>Length b: 96.0 mm ± 2 mm |
| | 16KS | Length a: 88 mm ± 2 mm<br>Length b: 92 mm ± 2 mm |
| Setting range | | -10.0 mm to +10.0 mm (1 step: 0.1 mm) |

#### (3) Procedure

- Make copies in the tri-fold mode.
- Check whether the tri-fold widths "a" and "b" of ejected copy samples are within the target. Complete the adjustment, if the measured values fall within the target.

##### (a) If the width "a" is out of the target:

1. Call the Service Mode to the screen.
2. Touch [Finisher] -> [FS-FN adjustment] -> [1st Tri-Fold Adjustment].
3. Select a paper size where the tri-fold position needs adjustment.
4. While checking the copy samples, touch [+] or [-] to adjust the tri-fold position.
   - To increase the width a, enter a positive value with [+].
   - To decrease the width a, enter a negative value with [-].
5. Touch [Test Copy].
6. Select the tray loading paper for the test copy.
7. Touch [3].
8. Touch [Tri-Fold], and press the start key.
9. Check displacement of the fold position on the fed out copies.
10. Touch [END] to return to the adjustment screen.
11. Touch [OK] twice.
12. Touch [Exit] on the Service Mode screen.

##### (b) If the width "b" is out of the target:

1. Call the Service Mode to the screen.
2. Touch [Finisher] -> [FS-FN adjustment] -> [2nd Tri-Fold Adjustment].
3. Select a paper size where the tri-fold position needs adjustment.
4. While checking the copy samples, touch [+] or [-] to adjust the tri-fold position.
   - To increase the width b, enter a positive value with [+].
   - To decrease the width b, enter a negative value with [-].
5. Touch [Test Copy].
6. Select the tray loading paper for the test copy.
7. Touch [3].
8. Touch [Tri-Fold], and press the start key.
9. Check displacement of the fold position on the fed out copies.
10. Touch [END] to return to the adjustment screen.
11. Touch [OK] twice.

12. Touch [Exit] on the Service Mode screen.

### 5.29.4 FS-FN adjustment - Punch Edge Adj

#### (1) Use

- To change the horizontal position of the punch holes.

#### (2) Setting range

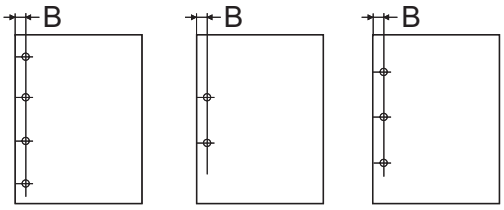


- Width B should fall within the following target.

| | |
|---|---|
| Target | 9.5 mm ± 1.0 mm (2-3 hole), 11.0 mm ± 1.0 mm (2-4 hole), 10.5 mm ± 1.0 mm (SWE4 hole) |
| Setting range | -5.0 mm to +5.0 mm (1 step: 0.1 mm) |

#### (3) Procedure (PK-520)

1. Make a copy sample in the punch mode.
2. Make an adjustment so that the width B is within the target.
3. Call the Service Mode to the screen.
4. Touch [Finisher] -> [FS-FN adjustment] -> [Punch Edge Adj].
5. Touch the paper type where punch horizontal position is adjusted.
6. Look at the copy and adjust the punch horizontal position with the [+] / [-] key.
   - To make width B greater: Enter the value of [+]
   - To make width B smaller: Enter the value of [-]

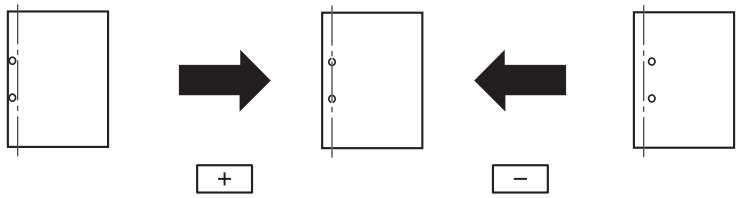


7. Touch [Test Copy].
8. Select the tray loading paper for the test copy.
9. Touch [3].
10. Select the number of punch holes in the “Punch” list, and then press the start key.
11. Check the punch hole positions.
12. Touch [END] to return to the adjustment screen.
13. Touch [OK] twice.
14. Touch [Exit] on the Service Mode screen.

### 5.29.5 FS-FN adjustment - Punch Regist Loop Size

#### (1) Use

- Adjusts the punch loop size used for paper exited from the main body.
- Used when tilted punched hole position, wrinkled paper, or jam at punch registration section occurs.

#### (2) Setting range

- -4.0 to +4.0 mm

#### (3) Procedure

1. Call the Service Mode to the screen.
2. Touch [Finisher] -> [FS-FN adjustment] -> [Punch Regist Loop Size].
3. Select a paper type where the punch hole position needs adjustment.
4. Set the target using the [+] / [-] keys.
   - Misaligned punched holes: Enter the value of [+]
   - Wrinkled paper: Enter the value of [-]
5. Touch [OK].
6. Touch [Exit] on the Service Mode screen.

### 5.29.6 FS-FN adjustment - Finisher Components Test Mode

#### (1) Use

- Use this adjustment to check finisher’s operation.

### (2) Procedure

1. Call the Service Mode to the screen.
2. Touch [Finisher] -> [FS-FN adjustment] -> [Finisher Components Test Mode].
3. Select a mode.
4. Press the Start key to start finisher operation.
5. Press the Stop key to stop ongoing finisher operation.

### (3) Finisher components list (FS-534/FS-534SD)

| Mode | |
|---|---|
| Finisher Components Test Mode 1 | Paper Transport Motor |
| | Paper Entrance Motor |
| | Paper Exit Motor |
| | Paper Alignment Plate Motor/F |
| | Main Tray Up/Down Motor |
| | Paper Alignment Plate Motor/R |
| | Side Stopper Guide Motor |
| | Paper Exit Belt Motor |
| | Exit Roller Retraction Motor |
| | Tail Edge Holding Plate Motor |
| | Side Stapler Movement Motor |
| | FD Center Stopper Guide Motor |
| | Punch Drive Motor |
| | Paddle Motor |
| Finisher Components Test Mode 2 | Switch Output Tray Motor |
| | SD Paper Transport Motor |
| | Folding Roller Motor |
| | Leading Edge Gripper Solenoid |
| | Leading Edge Stopper Motor |
| | CD Alignment Plate Motor |
| | Folding Knife Motor |
| | Chip Box Change Motor |
| | Paper Discharge Control Motor |
| | SD Paddle Motor |
| | Tri-folding Knife Motor |

### (4) Finisher components list (FS-533)

| Mode |
|---|
| Stapler Movement |
| Alignment Plate F/R Movement |
| Tray up/down Operation |
| Exit Roller Retraction |
| Conveyance Drive |
| Paper Surface Detect Solenoid |
| Paddle 1 Rotation Solenoid Drive |
| Punch Drive Motor |
| Batch Solenoid Driver |

## 5.29.7 FS-FN adjustment - Alignment plate Position

### (1) Use

- When FS-533 is installed, use this feature to fine adjust the aligning plate that aligns ejected paper.

### (2) Default setting

- 0.0 mm

### (3) Setting range

- -10.0 mm to +10.0 mm (1 step: 0.1 mm)

### (4) Procedure

1. Call the Service Mode to the screen.
2. Touch [Finisher] -> [FS-FN adjustment] -> [Alignment Plate Position].
3. Select the [Alignment Plate Position (Back)] or [Alignment Plate Position (Side)].
4. Set and adjust a value with the [+] / [-] key.

5. Touch [OK].
6. Touch [Exit] on the Service Mode screen.
7. Turn OFF the main power switch, wait for 10 sec., then turn the switch ON.

### 5.29.8 FS-FN adjustment - Paper Alignment Guides W. Adj.

#### (1) Use

- To fine adjust the horizontal width of the aligning plate.
- Use this feature to fine adjust the aligning plate that aligns ejected paper.

#### (2) Default setting

- 0.0 mm

#### (3) Setting range

- -10.0 mm to +10.0 mm (1 step: 0.1 mm)

#### (4) Procedure

1. Call the Service Mode to the screen.
2. Touch [Finisher] -> [FS-FN adjustment] -> [Paper Alignment Guides W. Adj.].
3. Select a mode you want to adjust.
4. Set and adjust a value with the [+] / [-] key.
5. Touch [OK].
6. Touch [Exit] on the Service Mode screen.

### 5.29.9 Punch Option Setting

#### (1) Use

- Specifies punch settings depending on the optional punch kit attached to the finisher.
- An individual punch setting needs to be made according to the type of the punch option.

#### (2) Procedure

1. Call the Service Mode to the screen.
2. Touch [Finisher] -> [Punch Option Setting].
3. Touch [PK-520].
4. Select the number of punch holes in accordance with the punch kit destination type.
5. Touch [decision].
6. Touch [END].
7. Touch [Exit] on the Service Mode screen.

#### (3) Default setting

- Non-installat.

### 5.29.10 Max. # of Folded Sheets Setting

#### (1) Use

- Imposes restriction on the number of sheets to be folded in each of different folding modes.
- To change the maximum number of sheets to be folded in each of different folding modes.

#### (2) Procedure

1. Call the Service Mode to the screen.
2. Touch [Finisher] -> [Max. # of Folded Sheets Setting].
3. Select a folding mode where the maximum is restricted and enter a desirable maximum number with the 10-key pad.
4. Touch [END].
5. Touch [Exit] on the Service Mode screen.

#### (3) Default setting

- Center Fold: 5 Piece
- Center Staple: 20 Piece
- Tri-Fold: 3 Piece

#### (4) Setting range

Center Fold
- 1 to 5 Piece

Center Staple
- 2 to 20 Piece

Tri-Fold
- 1 to 3 Piece

### 5.29.11 Job Separator

#### (1) Use

- Checks the job separator’s operation.

### (2) Procedure

1. Call the Service Mode to the screen.
2. Touch [Finisher] -> [Job Separator].
3. Select the mode where you wish to check the operation.
4. Press the Start key to start job separator operation.
5. Press the Stop key to stop ongoing job separator operation.

## 5.30 Network Settings

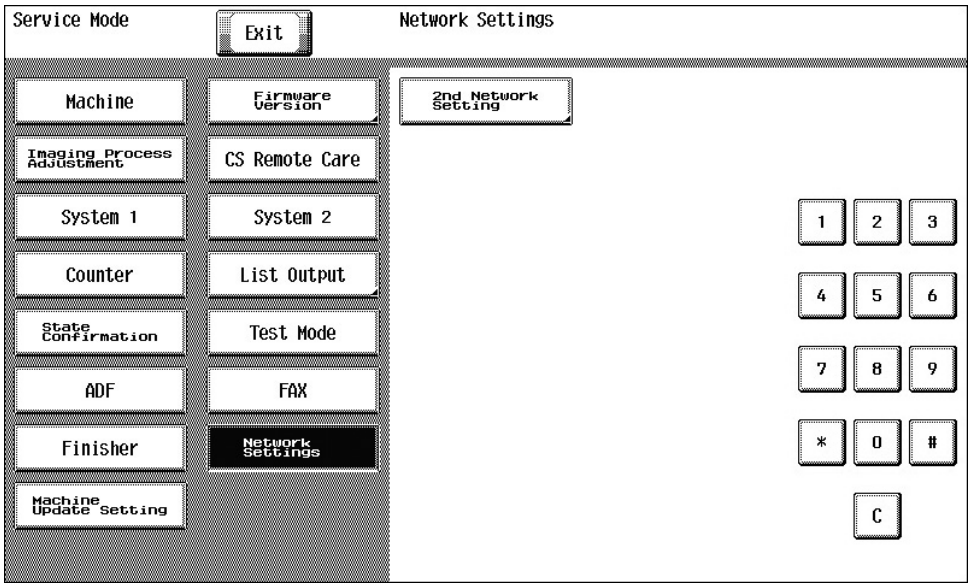


- It is displayed when this machine is equipped with an optional upgrade kit UK-212.
- To perform a remote control from an Android tablet terminal or iOS terminal, bizhub Remote Access are required.

### 5.30.1 2nd Network Setting - 2nd network card settings

#### (1) Use

- To be configured when an optional Upgrade Kit UK-212 has been installed in this machine.

#### (2) Default setting

- Unset

#### (3) Setting item

- Set
- Unset
- When [Set] is selected, configure the following settings.

### 5.30.2 2nd Network Setting - Network Interface Settings

**NOTE**

- **Before making settings, note the network environment of the customer and make the settings to suit the environment.**

#### (1) Use

- To connect the MFP main unit as a wireless LAN adapter to a wireless LAN access point connected to the LAN environment. (when Wireless Only or Wired+Wireless (Secondary Mode) is selected)
- To perform direct communication between the MFP main unit and a mobile terminal. (when Wired+Wireless (Primary Mode) or Wired +Wireless (Wi-Fi Direct) is selected)

#### (2) Setting item

| Network Interface Settings | Description |
|---|---|
| Wired Only | Use when the MFP main unit is connected only to a LAN environment. |
| Wireless Only | • Use when the MFP main unit is connected only to a wireless LAN environment.<br>• A job is received from the client via the wireless LAN access point and executed. |
| Wired+Wireless (Secondary Mode)*1 | • Use when the MFP main unit is connected to both a LAN environment and a wireless LAN environment.<br>• A job is received from the client via the LAN and executed. |
| Wired+Wireless (Primary Mode)*1 | • The MFP main unit is used as a wireless LAN access point (Primary Mode).<br>• When starting up the MFP main unit, perform wireless LAN communication between the MFP main unit and the mobile terminal (Android terminal, iOS terminal, or devices supporting Wi-Fi) without via wireless LAN access point.<br>• Use when the MFP main unit is connected to both a LAN environment and a wireless LAN environment. |

| | |
|---|---|
| Wired+Wireless (Wi-Fi Direct) *1 | • Use when the MFP main unit is connected to both a LAN environment and a wireless LAN environment.<br>• The MFP main unit is used as a wireless LAN access point.<br>• With this mode, a mobile terminal (excluding iOS) can be connected to Wi-Fi Direct authentication devices easily. |

- *1 When this setting is enabled, [Administrator Settings] -> [System Connection] -> [Universal Print Settings] -> [Store Print Documents Settings] is set to “Disable”.

NOTICE
- See THEORY OF OPERATION UK-212 for more information.

### 5.30.3 2nd Network Setting - SSID

#### (1) Use
- To enter the SSID of the wireless LAN access point connected to the machine (using up to 32 characters).

### 5.30.4 2nd Network Setting - Authentication/Encryption Algorithm

#### (1) Use
- To set the algorithm used for authentication or encryption.

#### (2) Default setting
- No Authentication/Encryption

#### (3) Setting item
- “No Authentication/Encryption”
- WEP
- WPA-PSK (AES)
- WPA2-PSK (AES)

### 5.30.5 2nd Network Setting - WEP Key

#### (1) Use
- To be set when WEP is selected for authentication/encryption Algorithm.

#### (2) Procedure
1. Select an input method.
2. Touch Edit, then enter a new WEP key.
3. Touch OK.
4. Enter the WEP key again to make a check.
5. Touch OK.

### 5.30.6 2nd Network Setting - Passphrase

#### (1) Use
- To be set when a method including WPA is selected for authentication/encryption Algorithm.

#### (2) Procedure
<Input method>
- Select an input method.

<Security key>
- Enter a value of the security key of passphrase.

<Passphrase Auto Update>
- Set ON/OFF for passphrase auto update. [Yes] is specified by default.

<Update Interval>
- Set the interval for updating passphrase. [60] minutes is specified by default.

<40 to 20 MHz Auto Switch>
- Set [ON] to try a high-speed communication with 40MHz. [OFF] is specified by default.

### 5.30.7 2nd Network Setting - Wireless Channel

#### (1) Use
- To set a wireless channel.

#### (2) Default setting
- Auto

#### (3) Setting item
- 1 to 13
- Auto

### 5.30.8 2nd Network Setting - ANY Connection

#### (1) Use

- To set whether or not to allow the ANY connection.

#### (2) Default setting

- Permit

#### (3) Setting item

- Permit
- Prohibit

### 5.30.9 2nd Network Setting - Connect permission extension address list

#### (1) Use

- To allow the connection through the only device with specified MAC address.

#### (2) Procedure

1. Touch [Edit], then enter the MAC address.

### 5.30.10 2nd Network Setting - DHCP Server Setting

#### (1) Use

- To set whether or not to enable the DHCP server.

#### (2) Default setting

- ON

#### (3) Setting item

- ON
- OFF
- If set to ON, set the IP leasing address, subnet mask and leasing period.

### 5.30.11 2nd Network Setting - TCP/IP Settings

#### (1) Use

- To set TCP/IP.

#### (2) Procedure

1. If IPv4 Settings is selected, select [Auto Input] or [Enter New Address].
   - If [Auto Input] is selected, configure DHCP settings.
   - If [Enter New Address] is selected, set [IP Address] and [Subnet Mask].
2. If IPv6 Settings is selected, the link-local address will be displayed as IPv6 type.

## 5.31 Machine Update Setting

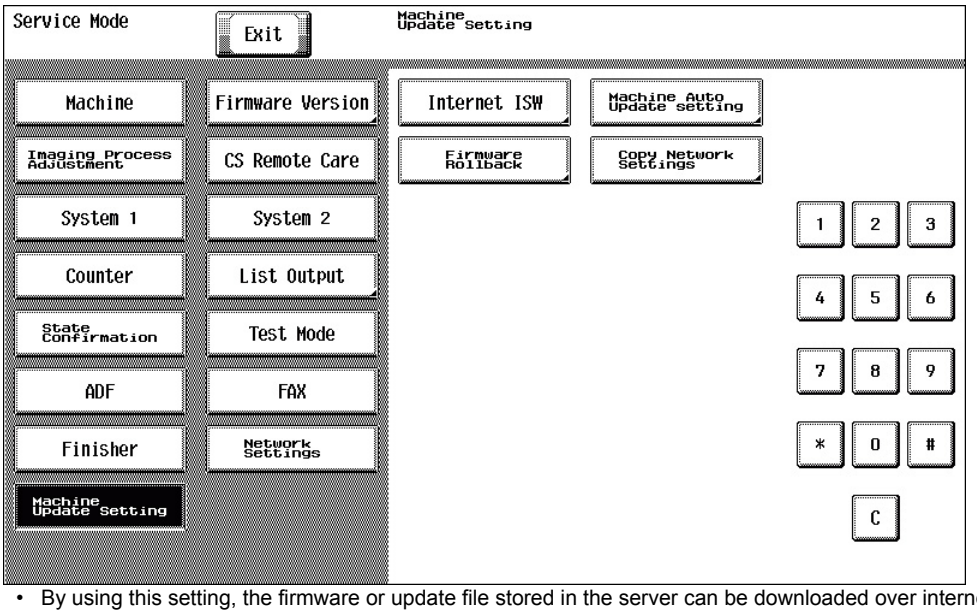


- By using this setting, the firmware or update file stored in the server can be downloaded over internet for upgrading.
- For details for upgrading the firmware, refer to "REWRITING OF FIRMWARE."

### 5.31.1 Internet ISW - Internet ISW Set

#### (1) Use

- To set whether or not to enable each setting for Internet ISW.
- To use when upgrading the firmware by Internet ISW.
- Each setting such as Server setting will be valid by setting this to “ON”.

**NOTE**

- **If [Administrator Settings] -> [Security Settings] -> [Enhanced Security Mode] is set to “ON”, this setting will automatically be set to “OFF” and cannot be changed.**

#### (2) Default setting

- OFF

#### (3) Setting item

- ON
- OFF
- When this setting is set to "ON," [Open Mode Settings] can be configured. When [Open Mode Settings] is set to "Set," firmware download and update via Internet ISW are available in Administrator Settings.

### 5.31.2 Internet ISW - HTTP Setting

- It will be displayed only when [Internet ISW Set] is set to “ON”.

#### (1) HTTP data acquisition setting

##### (a) Use

- To set whether or not to enable downloading using the HTTP protocol.
- To use when accessing the server using the HTTP protocol.

##### (b) Default setting

- OFF

##### (c) Setting item

- ON
- OFF

#### (2) Connection Time-Out

##### (a) Use

- To set the time for the timeout for accessing the server.

##### (b) Default setting

- 60 sec

##### (c) Setting range

- 30 to 300 sec.

### 5.31.3 Internet ISW - FTP Setting

- It will be displayed only when [Internet ISW Set] is set to “ON”.

#### (1) FTP data acquisition setting

##### (a) Use

- To set whether or not to enable downloading using FTP protocol.
- To use when accessing the server with FTP protocol.

##### (b) Default setting

- ON

##### (c) Setting item

- ON
- OFF

#### (2) Connection Setting

##### (a) Use

- To set the port No. and the time for timeout when accessing the FTP server, and also to set whether or not to enable PASV mode.
- To use when connecting by the PASV (passive) mode (FTP server side will inform the connection port before connecting).

##### (b) Procedure (Port Number)

- Enter the port number using the 10-key pad within the range of 1 to 65535.

#### (c) Default setting (Port Number)

- 21

#### (d) Procedure (Connection Time Out)

- Enter the value between 1 and 60 (min.) using the 10-key pad.

#### (e) Default setting (Connection Time Out)

- 1 minute

#### (f) Default setting (PASV Mode)

- OFF

#### (g) Setting item (PASV Mode)

- ON
- OFF

### 5.31.4 Internet ISW - Forwarding Access Setting

#### (1) User ID

##### (a) Use

- To register the user ID for accessing the program server where firmware is to be stored.

##### (b) Procedure

1. Select [User ID].
2. Enter the user ID (up to 64 one-byte characters) on the on-screen keyboard.

#### (2) Password

##### (a) Use

- To register the password for accessing the program server where firmware is to be stored.

##### (b) Procedure

1. Select [Password].
2. Enter the password (up to 64 characters) on the on-screen keyboard.

#### (3) URL

##### (a) Use

- To register the address and directory of the program server where the firmware is to be stored in URL.

##### (b) Procedure

1. Select [URL].
2. Enter the URL (up to 256 one-byte characters) on the on-screen keyboard.
   **NOTE**
   - **Enter the URL which format suits the protocol to be used.**
     **When connecting to http "http:// (Host name or IP address)/ directory name" or "https:// (Host name or IP address)/ directory name".**
     **When connecting to ftp "ftp:// (Host name or IP address) / directory name".**

#### (4) FileName

##### (a) Use

- To register the file name of the firmware data to be downloaded.

##### (b) Procedure

1. Select [FileName].
2. Enter the file name (up to 63 one-byte characters) on the on-screen keyboard.

### 5.31.5 Internet ISW - Download

**NOTE**

- **To connect MFP to the Internet via a proxy, the proxy server related settings must be configured in addition to [Forwarding Access Setting].**
  **The setting of the proxy used in the Internet ISW communication is configured in [Administrator Settings] -> [Network Settings] -> [Machine Update Settings] -> [Internet ISW Settings] -> [FTP Server Settings] or [Administrator Settings] -> [Network Settings] -> [Machine Update Settings] -> [HTTP Proxy Settings].**

#### (1) Download/Update

##### (a) Use

- Access the program server according to the Internet ISW setting, and download the firmware.
- To use when updating the firmware via network.

- The firmware is downloaded and updated successively. During the firmware download and update, MFP cannot be used.

#### (b) Procedure

1. Select [Download/Update].
2. Touch [Start] to start downloading the firmware.
3. The message to show the status will be displayed on the screen while connecting and transferring data.
   **NOTE**
   - **If connection to the program server or data download fails, an error code and a message are displayed. Identify the cause of the problem with the error code and reconfigure the settings following the message.**
     **Refer to "K.5.1 Error code list for the Internet ISW" for the error codes.**
4. When the firmware is normally upgraded, the main body will automatically be restarted to complete the Internet ISW.

### (2) Download

#### (a) Use

- To access the program server and download the firmware in accordance with the settings configured in Internet ISW Settings.
- As the firmware is downloaded in the background, MFP can be used during download.
- If firmware data already downloaded exits in the HDD, the data is overwritten and replaced by the new data.

#### (b) Procedure

1. Select [Download].
2. Touch [Start] to start downloading the firmware.
3. The status message appears on the screen during connection and data transfer.
   In the middle of downloading, the task can be cancelled by touching [Cancel].
   **NOTE**
   - **If connection to the program server or data download fails, an error code and a message are displayed. Identify the cause of the problem with the error code and reconfigure the settings following the message.**
   - **For details on error codes refer to "K.5.1 Error code list for the Internet ISW".**
4. When the firmware download is successfully completed, the result "OK" appears.

### (3) Update

#### (a) Use

- To update the firmware by using the firmware downloaded and saved in the HDD.
- During the firmware download and update, MFP cannot be used.
- This button is not appeared if there is no firmware in the HDD.

#### (b) Procedure

1. Touch [Update].
2. Check the firmware file version in HDD.
3. Press Start key to update the firmware.
4. When the firmware is normally upgraded, the main body will automatically be restarted to complete the Internet ISW.

### (4) Delete

#### (a) Use

- To delete the firmware file saved in the HDD.
- This button is not appeared if there is no firmware in the HDD.

#### (b) Procedure

1. Touch [Delete].
2. Press Start key to delete the firmware.

## 5.31.6 Internet ISW - Update Start Time Settings

### (1) Use

- To set the start time in order to automatically update the downloaded firmware.

### (2) Procedure

1. Select [Set] for [Update Firmware at Specified Time].
2. Touch [Hour] and [Min.] and set the firmware update start time.

**NOTE**

- **If updated firmware has not been downloaded by the specified time, firmware update is not performed.**
- **If the main power switch is turned OFF during a firmware update, the firmware is updated next time when the main power switch is turned ON.**
- **If a job is in process when the specified time comes, the firmware is updated after the completion of the job.**

## 5.31.7 Machine Auto Update setting - Auto Update setting

- Obtain the update file for the machine from the file storage server, and update the firmware or settings of the machine.
- This function is same as that of the [Administrator settings] -> [Network Setting], but it will not be used together with the function of the service mode.

- Refer to J-4 for how to create an update file.

### (1) Server 1 Settings - Auto Update

#### (a) Use

- To obtain the update file from the specified location, and configure settings to update the machine at the specified time.

#### (b) Default setting

- OFF

#### (c) Setting item

- ON
- OFF

#### (d) Procedure

- If [ON] is selected, configure the following settings.

When configuring the settings for SMB with the download protocol *1
<Host Name>
- Set the host name for the SMB server.

<File Path>
- Set the file path used in the SMB server communication. *2

<User Name>
- Set the user name used to access the SMB server.

<Password>
- Set the password used to access the SMB server.

<Number of retries>
- Set the number of times to retry when failed to obtain.

*1: If the MFP relay server is used as a server on the data providing side, the SMB protocol will not be used.
*2: Specify the folder in which C_UpdateList.ini is stored. Refer to J-4 for details.
When HTTP is set for the download protocol
<URL>
- Set the address of the http server. *1

<User Name>
- Set the user name used to access the relay server by http protocol.

<Password>
- Set a password used to access the http server.

<Proxy>
- Select whether or not to use the proxy server. *2

<Connection Time-out>
- Set the timeout period for connecting to the server.

*1: Specify the folder in which C_UpdateList.ini is stored. Refer to J-4 for details.
*2: If [ON] is selected, set the proxy with [Administrator Settings] -> [Network Settings] -> [Machine Update Settings] -> [HTTP Proxy Settings].

### (2) Server 2- Settings - Auto update

#### (a) Use

- To obtain the update file from the specified location, and configure settings to update the machine at the specified time.

#### (b) Default setting

- OFF

#### (c) Setting item

- ON
- OFF

#### (d) Procedure

- If [ON] is selected, configure the following settings.

<URL>
- Set the address of the http server. *1

<User Name>
- Set the user name used to access the relay server by http protocol.

<Password>
- Set a password used to access the http server.

<Proxy>
- Select whether or not to use the proxy server. *2

<Connection Timeout>
- Set the timeout period for connecting to the server.

*1: Specify the folder in which C_UpdateList.ini is stored. Refer to J-4 for details.
*2: If [ON] is selected, set the proxy with [Administrator Settings] -> [Network Settings] -> [Machine Update Settings] -> [HTTP Proxy Settings].

### (3) Common Settings

- Configure the common settings for [Server 1 settings] and [Server 2 settings].

#### (a) Update Time

- Touch Clear to set the time to update the machine.

#### (b) Polling Interval

- Set the polling period for obtaining the update list.

#### (c) Retry Interval

- Set the period for retrying when failed to obtain.

## 5.31.8 Machine Auto Update setting - Relay server setting

### (1) Update File Download

- Configure settings to use the relay server to obtain the update relay data.
- This function is same as that of the Administrator settings > Network Setting, but it will not be used together with the function of the service mode.
- Refer to J-5 for how to create an update file.

#### (a) Default setting

- OFF

#### (b) Setting item

- ON
- OFF

#### (c) Procedure

- If [ON] is selected, configure the following settings.

<Obtain Setting File-URL>
- Set the address of the file storage server. *1

<Obtain Setting File-User Name>
- Set the user name used to access the file storage server.

<Obtain Setting File-Password>
- Set the password used to access the file storage server.

<Obtain Setting File-Proxy>
- Set whether or not to use the proxy server. *2

<Obtain Setting File-Connection Time-out>
- Set the time out period to connecting to the server.

<Polling Interval>
- Set the polling period for obtaining the update list.

<Repeat Interval>
- Set the period for retrying when failed to obtain.

*1: Specify the folder in which S_UpdateList.csv is stored. Refer to J-5 for details.
*2: If [ON] is selected, set the proxy with [Administrator Settings] -> [Network Settings] -> [Machine Update Settings] -> [HTTP Proxy Settings].
The distribution server (SMB authentication) will not be used.
In case of the distribution server (HTTP)

<User Name>
- Set the user name used to access the relay server by http protocol.

<Password>
- Set the password that is used to access the http server.

**NOTE**
- **Be sure not to forget the password used to access the http server. It is required for reset.**

## 5.31.9 Machine Auto Update setting - Transmission log Update

- The log file saves up to 100 records.
- Save the log related to machine auto update, and send it to the specified location.
- Configure settings for the transmission protocol.

### (1) Default setting

- OFF

### (2) Setting item

- ON
- OFF

### (3) Procedure

- If [ON] is selected, configure the following settings.

When SMB is set for the transmission protocol
<Host Name>

- Set the host name for the SMB server.

<File Path>
- Set the file path used for SMB server communication.

<User Name>
- Set the user name used to access the SMB server.

<Password>
- Set the password used to access the SMB server.

When WebDAV is set for the transmission protocol

<URL>
- Set the address of the WebDAV server.

<User Name>
- Set the user name used to access the WebDAV server.

<Password>
- Set the password used to access the WebDAV server.

<Proxy>
- Set whether or not to use the proxy server. *1

*1: If [ON] is selected, set the proxy with [Administrator Settings] -> [Network Settings] -> [Machine Update Settings] -> [HTTP Proxy Settings].

### 5.31.10 Machine Auto Update setting - Transmission Server Log

- The log file saves up to 100 records.
- Save the log related to the update relay data download at relay server, and send it to the specified location.
- Configure settings for the transmission protocol.

#### (1) Default setting

- OFF

#### (2) Setting item

- ON
- OFF

#### (3) Procedure

- If [ON] is selected, configure the following settings.

When SMB is set for the transmission protocol

<Host Name>
- Set the host name for the SMB server.

<File Path>
- Set the file path used for SMB server communication.

<User Name>
- Set the user name used to access the SMB server.

<Password>
- Set the password used to access the SMB server.

When WebDAV is set for the transmission protocol

<URL>
- Set the address of the WebDAV server.

<User Name>
- Set the user name used to access the WebDAV server.

<Password>
- Set the password used to access the WebDAV server.

<Proxy>
- Set whether or not to use the proxy server. *1

*1: If [ON] is selected, set the proxy with [Administrator Settings] -> [Network Settings] -> [Machine Update Settings] -> [HTTP Proxy Settings].

### 5.31.11 Machine Auto Update setting - Update Log Display

#### (1) Use

- To check the log related to the file download of the machine auto update.
- The latest five logs can be checked.

### 5.31.12 Machine Auto Update setting - Relay Server Log Confirmation

#### (1) Use

- To check the log related to the file download of the relay server.
- The latest five logs can be checked.

### 5.31.13 Machine Auto Update setting - Manual Update

- This is displayed when [Auto Update] is set to [ON] in [Service Mode] -> [Machine Update Setting] -> [Machine Auto Update setting] -> [Auto Update setting], and the update file has been downloaded in HDD.

#### (1) Use

- To execute update manually by using the downloaded file.

#### (2) Procedure

1. Touch [Manual Update] -> [Start] to start update.

**NOTE**
**Do not set the power to OFF under the following state.**
- **It takes about 45 seconds from touching [Manual Update] -> [Start] to the next operation of the MFP (Auto Power OFF).**
- **About one minute after the download completed screen being displayed, the MFP will restart.**
- **When rewriting configuration files followed by the firmware, the MFP will restart again.**

### 5.31.14 Machine Auto Update setting - Machine Export setting

#### (1) Use

- Output the main unit configuration in XML format to a USB memory device or the SMB folder in the main unit.

<Target items to be exported are as follows>
- Remote Access Setting
- User Settings
- Service Settings (Excluding the setting of Software switch and Engine FW DipSW)
- Address Book*
- Authentication Data*
- Network Settings*
- Administrator Settings*
- Cloud connection*
- Custom Display Settings*

*: It will be displayed when [Service Mode] -> [System 2] -> [▶] -> [Maintenance Mode] is set to “Effective.”

#### (2) Procedure

1. Select [Service Mode] -> [Machine Update Setting] -> [Machine Auto Update Setting] -> [Machine Export Setting].
2. Select the item to be output.
3. Select either [USB] or [SMB] as the [Export Destination]. *1
   If you select [USB], connect a USB memory device to a USB port.
4. Enter a password. *2
5. Touch [Start].
6. [Result: OK] will be displayed.
7. Complete the data export. *3

*1: [SMB] displays if the following settings are made.
[Administrator Settings] -> [Network Settings] -> [SMB Settings] -> [SMB Server Settings] -> [Share SMB File Setting] -> [ON]
[Service Mode] -> [System 2] -> [HDD] ->[Installed]
*2: If an XML file is to be used on the Auto Update function, register the same password beforehand to the MFP where a data is to be downloaded as [Machine Update Password].
*3: When [SMB] is selected, the data is exported to the SMB folder of this machine.
Check of the SMB folder: \\(IP address)\FWData_out$
If [ON] is selected for [CE Authentication], "User Name" and "CE Password" are required to access the folder.
User Name: CE
Password: CE Password

### 5.31.15 Machine Auto Update setting - Machine Update Password

#### (1) Use

- To set a password used to decrypt the update file of the machine.

#### (2) Procedure

- Enter the decryption password using the on-screen keyboard.

1. Current Password: Enter the currently used decryption password (only when the decryption password has been set).
2. New Password: Enter the new decryption password.
3. Re-enter New Password: Enter the new decryption password.

**NOTE**
- **Be sure not to forget the decryption password. It is required for reset.**

### 5.31.16 Firmware Rollback

**NOTE**
- **If there is no backed up firmware, the firmware version will not be displayed.**
  **For details, see "Creating back up files when updating firmware".**

#### (1) Firmware Rollback

##### (a) Use

- To be used when rewriting to the backed up firmware.
- To be used when error occurs at the time of firmware updating.

##### (b) Procedure

1. Check the version of the firmware to be rewritten.
2. Touch [Start].
3. A reboot is started.
4. Following the reboot, a firmware update screen appears. Then, check the version of each firmware.
5. Turn OFF and ON the main power switch.
6. Make sure that a message notifying the completion of the firmware rollback appears. Then, touch [OK].

### (2) Open Mode Settings

#### (a) Use

- To set whether to display/hide [Firmware Rollback] when selecting [Administrator Settings] -> [Network Settings] -> [Machine Update Settings].
- Even an administrator can rewrite to the backed up firmware.

#### (b) Default Setting

- Set

#### (c) Setting item

- Yes
- No

## 5.31.17 Copy Network Settings

### (1) Use

- To deliver the network-related information saved in the USB memory to, and set it in, other MFPs.
- One MFP is an originating side that delivers the network connection setting values to other MFPs within the same network.
- Setting values described in the CSV file and associated with the serial number of the recipient MFP are delivered and set.

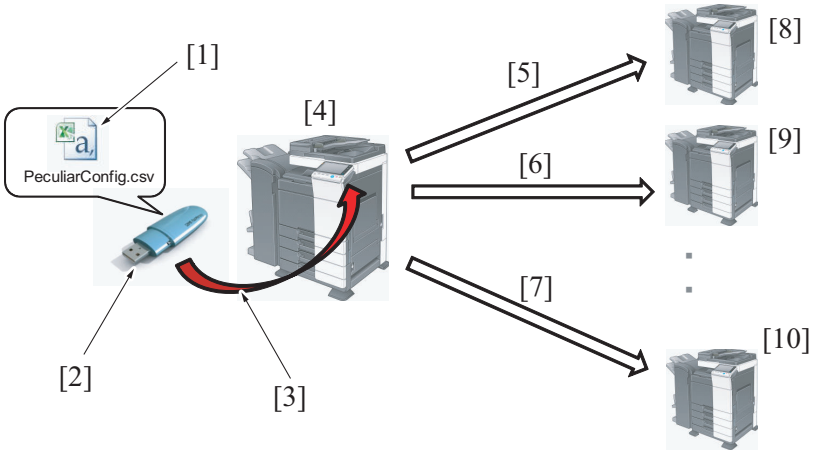


| | | | |
|---|---|---|---|
| [1] | CSV file containing setting values for network connection | [2] | USB memory |
| [3] | Connection | [4] | Recipient MFP |
| [5] | Delivering and setting values of recipient MFP (serial No.1) | [6] | Delivering and setting values of recipient MFP (serial No.2) |
| [7] | Delivering and setting values of recipient MFP (serial No.X) | [8] | Recipient MFP (serial No.1) |
| [9] | Recipient MFP (serial No.2) | [10] | Recipient MFP (serial No.X) |

### (2) Environmental preparations

- It is necessary to set and prepare in advance the originating MFP, recipient MFPs, USB memory, and the CSV file that describes the network settings.
- Perform the preparation procedure by following the steps given below.

#### (a) Setting the originating MFP

- Check that the originating MFP and the recipient MFP are connected to the same network (segment).
- Set a fixed IP address in the originating MFP.
- Set [Administrator Settings] -> [System Connection] -> [OpenAPI Settings] -> [Access Setting] to “Allow”.
- Set [Administrator Settings] -> [System Connection] -> [OpenAPI Settings] -> [External Application Connection] to “Yes”.

#### (b) Setting the recipient MFP

- Check that the originating MFP and the recipient MFPs are connected to the same network (segment).
- Check that the TCP/IP setting of the recipient MFP is enabled to permit network communications.
- Check that a serial number is set in the MFP.
- Set all settings in [Administrator Settings] -> [System Connection] -> [OpenAPI Settings] to the default values.

#### (c) USB memory

The following shows the requirements for the USB memory to be used for copying in the network settings:

- USB flash memory compatible with the USB (1.1/2.0) interface
- The USB memory is formatted in FAT32 format.
- No security functions such as encryption and password lock have been added (or the USB memory allows its security functions to be turned OFF).
- A USB memory that is recognized by the computer as two or more drives cannot be used.
- Use any write-protected USB memory in the write-enabled condition.

### (d) CSV file

- Appropriate the format of the CSV file, and prepare a CSV file where the recipient MFP and network setting value to be delivered and set have been input.
  Setting item: Corresponding to the “Column” of a CSV file format
  Setting value of recipient MFP: Corresponding to the “row” of a CSV file format
  NOTICE
  - CSV file format (PeculiarConfig.xls)

Procedure

1. Enter the serial number and the IP address v4 validation method.
2. Enter the other setting details in accordance with the CSV file format.
   For items that can be delivered and set and the detailed descriptions, see the CSV file format.
3. Enter the setting value of one recipient MFP against one row. And to set multiple MFPs, create setting value for each MFP while adding rows from top in order.

**NOTE**

- **The serial number and the IP address v4 validation method should invariably be entered.**
- **In any items left blank in the file, the items set in the MFP are automatically set.**
- **The file name should read “PeculiarConfig” with an extension of CSV.**
- **All MFPs having serial numbers contained in the CSV file will be the recipient MFPs. If any MFP that is to be excluded is included in the network, do not include the serial number of such an MFP in the file.**
- **Even when the serial number of the originating MFP is included in the CSV file, the originating MFP is not a recipient MFP.**
- **Up to 255 MFPs are recognized as the recipient MFP. Any serial numbers of the 256th MFP and onward contained in the CSV file will be excluded from the recipient MFPs.**

## (3) Procedure

1. Prepare a CSV file (PeculiarConfig.csv) that describes the setting values to be delivered.
2. Store the CSV file immediately under the root directory of the USB memory and connect to the originating MFP.
3. Call the Service Mode to the screen.
4. Touch [Machine Update Setting] -> [Copy Network Settings] -> [Connection Timeout].
5. Set Connection Timeout and touch [OK].
   Default value: 30 Sec
   Setting range: 1 to 300 Sec
6. Touch [Machine Update Setting] -> [Copy Network Settings] -> [Copy Setting] -> [Check Connection] -> [Start].
7. Check the number of MFPs displayed at “Result” against the number of MFPs displayed “OK”.
8. Touch [Copy] -> [Start]. This delivers the setting value information to the recipient MFPs one by one.
   **NOTE**
   - **Screen operations are displayed in the MFP in which the setting values are being rewritten.**
   - **Do not remove the USB memory until the procedure is completed.**
9. When the delivery of the setting values to all recipient MFPs and rewriting of the setting values in all recipient MFPs are completed, the recipient MFPs are restarted.
10. The CSV file (PeculiarConfig_Result.csv) that contains the delivery result is stored in the USB memory inserted in the originating MFP.
11. Check the delivery result file in the USB memory to thereby determine that the procedure has been normally terminated.
    **NOTE**
    - **When an error that disables continued delivery occurs, a corresponding error code appears on the control panel.**
    - **When a delivery error occurs in any of the recipient MFPs, a message appears that prompts a check of the delivery result file.**
    - **For details of the delivery error, check the specific details of the delivery result file.**

| Error code | Description |
|---|---|
| **N*****| **Communication error** |
| **E00001** | **The USB memory is not connected to the originating MFP.** |
| **E00002** | **The CSV file in the USB memory cannot be read.** |
| **E00003** | **The delivery result file cannot be created in the USB memory connected to the originating MFP.** |
| **E00004** | **The CSV file format is illegal.** |
| **E00005** | **Communication is not successful with an MFP having a serial number contained in the CSV file.** |
| **E00006 *** | **“Restrict” is set in [OpenAPI Settings] -> [Access Setting].** |
| **E00007 *** | **“ON” is set in [OpenAPI Settings] -> [Authentication].** |
| **E00008 *** | **“SSL Only” or “SSL/Non-SSL” is set in [OpenAPI Settings] -> [SSL/Port Settings].** |
| **E00009 *** | **Any data other than “50001” is set in [OpenAPI Settings] -> [SSL/Port Settings].** |
| **E00010 *** | **“No” is set in [OpenAPI Settings] -> [External Application Connection].** |
| **E00011** | **No response is received from the recipient MFP even after the lapse of a predetermined period of time after the CSV file has been delivered. (timeout error)** |
| **E00012** | **The recipient MFP is not at timing at which it can accept the OpenAPI message.** |
| **E00013** | **The recipient MFP fails in updating.** |
| **E00014** | **“Cancel” is selected during delivery.** |
| **E00015** | **The USB memory is removed from the originating MFP during delivery.** |
| **E00016** | **A serial number in the CSV file is illegal.** |
| **E00099** | **A network system error. Any of the network settings is not the default value.** |

- ***: Check the settings in the originating MFP when the error code appears on the control panel; check the settings in the recipient MFP when the error code is included in the delivery result file.**

# 6. SETUP WIZARD

## 6.1 Function outline

- Use of the Setup Wizard function allows those items that need to be set during the setup procedure to be extracted from the Service Mode and set.
- This enables efficient selection and setting of Service Mode functions during the setup procedure.

**NOTE**

- **The specific function may be set either via the "Service Mode" or the "Setup Wizard". The setting made last is the valid setting.**

### 6.1.1 Setup Wizard list

| Setup Wizard | Ref. page |
|---|---|
| Time Zone Setting /Date & Time Setting | I.5.2 Time Zone/Date & Time Input mode |
| Serial Number | I.5.15.3 Serial Number |
| Unit Change / Warning display | I.5.16.5 Unit Change |
| List Output | I.5.18 List Output |

## 6.2 Starting/Exiting

### 6.2.1 Starting procedure

1. Call the Service Mode to the screen.
2. Press the following keys in this order.
   - Stop -> 3
3. Touch the [Prev.] key or [Next] key to select the mode.
   Exsample: Time Zone Settin / Date & Time Sett

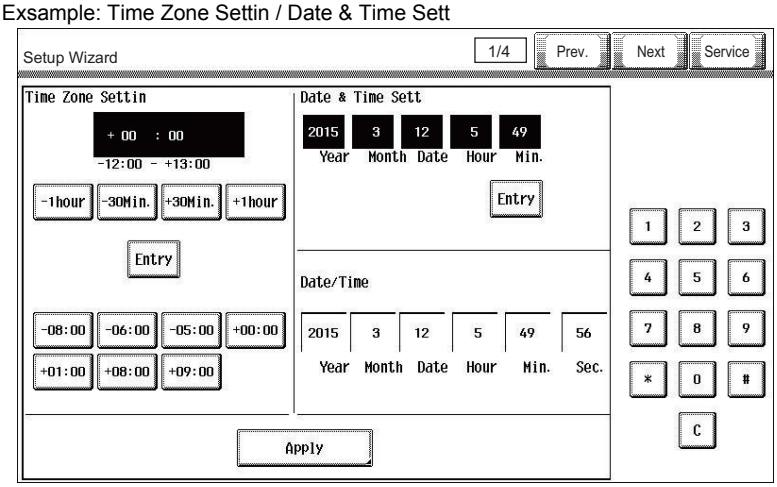


### 6.2.2 Exiting procedure

1. Touch [Service].
   The home Service Mode screen reappears.
2. Touch [Exit].
3. Turn OFF the main power switch. Wait 10 seconds, then turn ON the main power switch again.

# 7. ENHANCED SECURITY

## 7.1 List of Enhanced Security

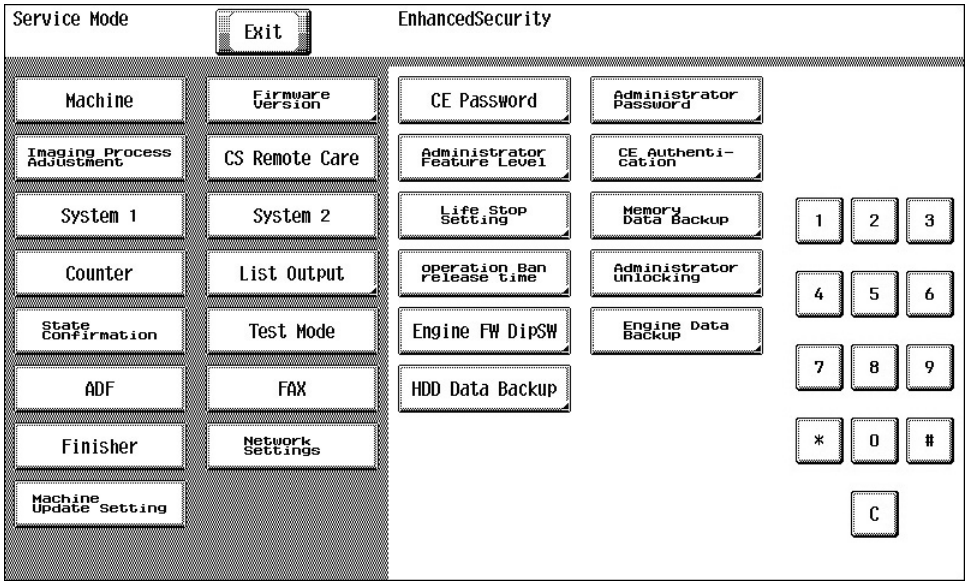


| Enhanced Security | Ref. page |
|---|---|
| CE Password | I.7.3.1 CE Password |
| Administrator Password | I.7.3.2 Administrator Password |
| Administrator Feature Level | I.7.3.3 Administrator Feature Level |
| CE Authentication | I.7.3.4 CE Authentication |
| Life Stop Setting | I.7.3.5 Life Stop Setting |
| Memory Data Backup | I.7.3.6 Memory Data Backup |
| operation Ban release time | I.7.3.7 operation Ban release time |
| Administrator unlocking | I.7.3.8 Administrator unlocking |
| Engine FW DipSW | I.7.3.9 Engine FW DipSW |
| Engine Data Backup | I.7.3.10 Engine Data Backup |
| HDD Data Backup | I.7.3.11 HDD Data Backup |
| TPM Setting | I.7.3.12 TPM Setting |

## 7.2 Starting/Exiting

### 7.2.1 Starting procedure

1. Call the Service Mode to the screen.
2. Press the following keys in this order.
   - Stop -> 0 -> Clear
3. Select a mode.

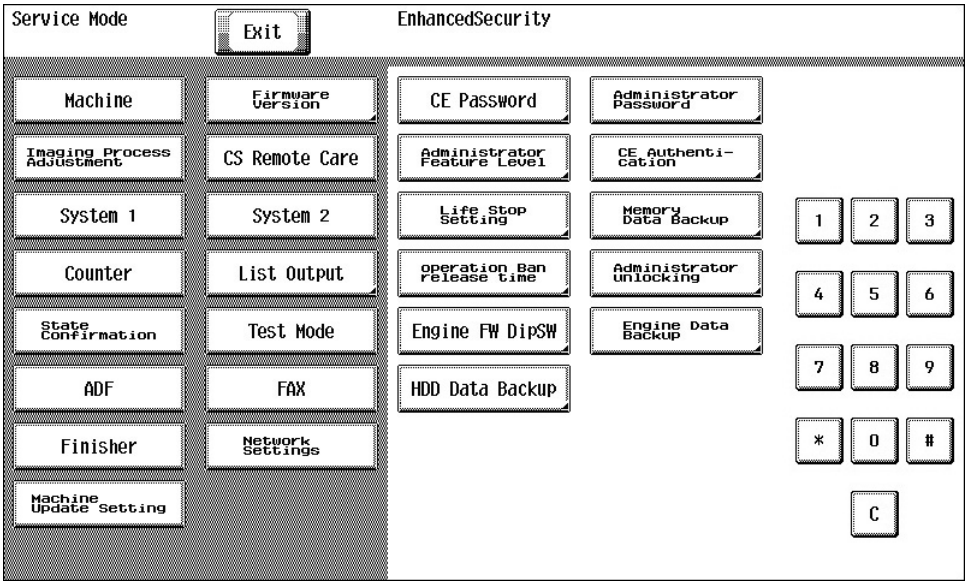


### 7.2.2 Exiting procedure

1. Touch [Exit].

2. Turn OFF the main power switch. Wait 10 seconds, then turn ON the main power switch again.

## 7.3 Enhanced Security

### 7.3.1 CE Password

#### (1) Use

- To set and change the CE password.
- The CE password needs to be 8 to 64 one-byte alphameric characters and symbols.

#### (2) Default setting

- 9272927292729272

#### (3) Procedure

- Enter the CE password (8 digits) on the on-screen keyboard.
  1. Current Password: Enter the currently using CE password.
  2. New Password: Enter the new CE password.
  3. Re-Input Password: Enter the new CE password again.

**NOTE**

- **When [Administrator Settings] -> [Security Settings] -> [Security Details] is set to [ON], new passwords cannot contain the same string of characters nor can be previous passwords be used.**
- **A new password is set when starts from the service mode after changing.**
- **NEVER forget the CE password. When forgetting the CE password, call responsible person of KM.**

### 7.3.2 Administrator Password

#### (1) Use

- To set and change the administrator password.
- Use this function when the administrator forget the administrator password because a new password can be set without entering the current administrator password with this.
- The administrator password needs to be 8 to 64 one-byte alphameric characters and symbols.

#### (2) Default setting

- 1234567812345678

#### (3) Procedure

- Enter the administrator password on the on-screen keyboard.
  1. New Password: Enter the new administrator password.
  2. Re-Input Password: Enter the new administrator password again.

**NOTE**

- **When [Administrator Settings] -> [Security Settings] -> [Security Details] is set to [ON], new passwords cannot contain the same string of characters nor can be previous passwords be used.**

### 7.3.3 Administrator Feature Level

#### (1) Use

- To set which modes to be allowed for the administrator to use in Service Mode.
- Use when allowing the administrator to use some modes in Service Mode.
- The modes allowed for the administrator to use in each setting are as follows.

| Administrator settings function | | | | Level 1 | Level 2 |
|---|---|---|---|---|---|
| System Settings | Expert Adjustment | Printer Adjustment | Erase Leading Edge | - | ○ |
| | | | Paper Feed Direction Adj. | - | ○ |
| | | Scanner Area | Scanner Adjustment: Leading Edge | - | ○ |
| | | | Scanner Adjustment: Centering | - | ○ |
| | | | Horizontal Adjustment | - | ○ |
| | | | Vertical Adjustment | - | ○ |
| | | ADF Adjustment | Centering | - | ○ |
| | | | Original Stop Position | - | ○ |
| | | | Centering Auto Adjustment | - | ○ |
| | | | Auto Adj. of Stop Position | - | ○ |
| | | User Paper Settings | | - | ○ |
| | Standard Size Setting | Original Glass Original Size Detect | | - | ○ |
| | | Foolscap Size Setting | | - | ○ |

#### (2) Default setting

- Prohibit

#### (3) Setting item

- Level 1
- Level 2

- Prohibit

### 7.3.4 CE Authentication

- If [Administrator Settings] -> [Security Settings] -> [Security Details] is enabled, this displays as "Disabled".
- It will be displayed when [Administrator Settings] -> [Network Settings] -> [Remote Panel Settings] -> [Client Settings] is set to “ON.”

#### (1) Use

- To determine whether or not to authenticate CE password as entering Service Mode.

**NOTE**

- **For setting the [Password Rules] to “ON”, set the CE Authentication to "ON". Change the initial CE password beforehand.**
- **Before setting the [Remote Panel Settings] to “ON”, set the CE Authentication to "ON".**

#### (2) Default setting

- ON

#### (3) Setting item

- ON
- OFF

### 7.3.5 Life Stop Setting

#### (1) Use

- To select whether or not to stop a print cycle when the drum unit, developing unit, transfer belt, and fusing unit reach its service life.

#### (2) Default setting

- off

#### (3) Setting item

- Enable
- off

### 7.3.6 Memory Data Backup

- Not used

### 7.3.7 operation Ban release time

#### (1) Use

- To set the time that elapses before the machine releases an access lock that is activated after the CE password authentication.
- To set the period of time that elapses before the machine releases the access lock, which aims to prevent the unintentional release of the access lock.
- After the CE password authentication, if the access lock is activated, the lock release timer starts to operate the following procedures.
  1. Main power switch is turned OFF and ON.
  2. Menu -> [Counter] -> [Print List]
  3. Touch [Display Keypad], displaying 10-key pad.
  4. The lock release timer starts to operate by input the Stop -> 0 -> 9 -> 3 -> 1 -> 7.
  5. When the timer reaches the time specified in this setting, the access lock is released.

#### (2) Default setting

- 5 (minutes)

#### (3) Setting range

- 1 to 60 (minutes)

**NOTE**

- **When Enhanced Security Mode is set to ON in [Administrator Settings] -> [Security Settings] -> [Enhanced Security Mode], the period of time that can be set in this setting is 5 minutes or more.**

### 7.3.8 Administrator unlocking

#### (1) Use

- To release an access lock that is activated after an administrator password authentication.
- To release the access lock with service authority when an administrator password authentication fails and the access lock is activated.
- When the main power switch is turned OFF and ON or the period of time set in the Release Time Settings elapses, the machine releases the access lock that is activated after the administrator password authentication. In addition to these operations, this setting provides another way to release the access lock.

#### (2) Procedure

1. Touch [Administrator unlocking].
2. Touch [unlocking] to release an access lock.
3. When [OK] is displayed, touch [OK].

### 7.3.9 Engine FW DipSW

- This is displayed only when Switch No. “59” is set to “01” in HEX Assignment in [Service Mode] -> [System 2] -> [Software Switch Setting] .

#### (1) Use

- To make printer engine settings.
- The following table shows DIP switches that can be set in this machine.

| Switch No. | Function | Ref. page |
|---|---|---|
| 1 | Not used | - |
| 2 | Not used | - |
| 3 | New Release Disable mode | I.7.3.9.(3).(a) New Release Disable mode |
| 4 | Not used | - |
| 5 | Choice of high humidity circumstance | I.7.3.9.(3).(b) Choice of high humidity circumstance |
| 6 | Choice of warm-up completion temperature | I.7.3.9.(3).(c) Choice of warm-up completion temperature |
| 7 | Choice of photo conductor pre-rotation time | I.7.3.9.(3).(d) Choice of photo conductor pre-rotation time |
| 8 | Choice of 2nd image transfer output table | I.7.3.9.(3).(e) Choice of 2nd image transfer output table |
| 9 | Choice of paper size detection at bypass tray | I.7.3.9.(3).(f) Choice of paper size detection at bypass tray |
| 10 | Not used | - |
| 11 | Choice of fusing roller rotation while waiting | I.7.3.9.(3).(g) Choice of fusing roller rotation while waiting |
| 12 | Not used | - |
| 13 | Choice of securing fusibility | I.7.3.9.(3).(h) Choice of securing fusibility |
| 14 | Choice of unit simultaneous replacement promotion | I.7.3.9.(3).(i) Choice of unit simultaneous replacement promotion |
| 15<br>:<br>16 | Not used | - |
| 17 | FS-534/PK-520 Punch operation noise suppression choice | I.7.3.9.(3).(j) FS-534/PK-520 Punch operation noise suppression choice |
| 18 | Choice of FS-533 tray home position switching | I.7.3.9.(3).(k) Choice of FS-533 tray home position switching |
| 19<br>:<br>21 | Not used | - |
| 22 | Choice of main scan direction white line correction | I.7.3.9.(3).(l) Choice of main scan direction white line correction |
| 23 | Choice of color photo conductor pre-rotation time | I.7.3.9.(3).(m) Choice of color photo conductor pre-rotation time |
| 24 | Choice of continuous temperature control after printing | I.7.3.9.(3).(n) Choice of continuous temperature control after printing |
| 25 | ACS parameter choice | I.7.3.9.(3).(o) ACS parameter choice |
| 26 | Choice of printing pause time during temperature increase inside the machine | I.7.3.9.(3).(p) Choice of printing pause time during temperature increase inside the machine |
| 27 | Not used | - |
| 28 | Choice of fusing mode for index paper | I.7.3.9.(3).(q) Choice of fusing mode for index paper |
| 29 | Rotation choice of developing unit/K | I.7.3.9.(3).(r) Rotation choice of developing unit/K |
| 30 | | |
| 31<br>:<br>56 | Not used | - |

#### (2) Procedure

1. Touch [Engine FW DipSW].
2. Touch the key that corresponds to the switch No. of the function to be set and check the key is highlighted (ON state) in reverse video.
3. Touch [OK].

#### (3) Details of Each Function

##### (a) New Release Disable mode

- To enable a unit that is temporarily used for troubleshooting or other purposes to be used again as a new unit in another machine, New Release Disable mode is provided.
- Applicable units are the following units that have the new unit detection feature.
  Drum unit/Y, M, C, K, Developing unit/Y, M, C, K
- When the New Release Disable mode is set, the parameter of the unit before replacement is used without making automatic adjusting control with the TCR sensor and new image stabilization control.

Procedure

1. Open the front door.
2. Call the Service Mode to the screen.
3. Call the Enhanced Security to the screen.
4. Touch [Engine FW DipSW].

5. Touch [3] and check the key is highlighted (ON state) in reverse video.
6. Touch [END].
7. Close the front door.
   By closing the front door, the New Release Disable mode takes effect.

I.7.3.9.(4) Notes when using the New Release Disable mode

### (b) Choice of high humidity circumstance

- Out of Fusing PPM control for preventing the paper from losing its fusibility, "high humidity circumstance mode" which controls paper curling in high humidity is prohibited.

| | |
|---|---|
| OFF | • Run "High-humidity Mode" in high-humidity environments.<br>• Longer warm-up time, but no occurrence of curl even under high humidity environment (Default) |
| ON | • Unable to run "High-humidity Mode" even in high-humidity environments.<br>• Shortens the warm-up time in high humidity environments, but there is a risk of paper curl occurring. |

Procedure

1. Call the Service Mode to the screen.
2. Call the Enhanced Security to the screen.
3. Touch [Engine FW DipSW].
4. Touch [5] and check the key is highlighted (ON state) in reverse video.
5. Touch [END].

### (c) Choice of warm-up completion temperature

- To set the fusing temperature at the time of black printing.
- It controls the occurrence of a fusing error at the time of black printing on paper recommended to EU regions.

| | |
|---|---|
| OFF | • Temperature control for regions other than EU (Default) |
| ON | • Temperature control for EU regions |

Procedure

1. Call the Service Mode to the screen.
2. Call the Enhanced Security to the screen.
3. Touch [Engine FW DipSW].
4. Touch [6] and check the key is highlighted (ON state) in reverse video.
5. Touch [END].

### (d) Choice of photo conductor pre-rotation time

- To set the pre-rotation time of the photo conductor.
- It controls the occurrence of void areas when being left for long time.

| | |
|---|---|
| OFF | • Photo conductor pre-rotation time: Short (priority on warm-up time reduction: Default) |
| ON | • Photo conductor pre-rotation time: Long (priority on image quality) |

Procedure

1. Call the Service Mode to the screen.
2. Call the Enhanced Security to the screen.
3. Touch [Engine FW DipSW].
4. Touch [7] and check the key is highlighted (ON state) in reverse video.
5. Touch [END].

### (e) Choice of 2nd image transfer output table

- To set the 2nd image transfer output table when printing on plain paper.
- If the 2nd image transfer output is insufficient, “void areas” will occur on a printed image. In that case, set “2nd image transfer output table 2” to finely adjust the transferring output.
- If the 2nd image transfer output is excessive, “white spots” will occur on a printed image. In that case, set “2nd image transfer output table 1” to finely adjust the transferring output.

| | |
|---|---|
| OFF | • 2nd image transfer output table 2 (high 2nd image transfer output) (Default) |
| ON | • 2nd image transfer output table 1 (low 2nd image transfer output) |

Procedure

1. Call the Service Mode to the screen.
2. Call the Enhanced Security to the screen.
3. Touch [Engine FW DipSW].
4. Touch [8] and check the key is highlighted (ON state) in reverse video.
5. Touch [END].
6. Call the Service Mode to the screen.
7. Touch [Imaging Process Adjustment] -> [Transfer Voltage Fine Adj] -> [2nd Transfer Adj.].
8. Make fine adjustment of the 2nd transferring for plain paper and check the printed image.

### (f) Choice of paper size detection at bypass tray

- To set the bypass tray automatic paper size detection dedicated to metric or inch sizes depending on the applicable marketing area.
- Set the inch sizes for the US market. Set the metric sizes for any other marketing areas.

**NOTE**

- **The default setting is to disable automatic paper size detection of metric and inch sizes. To enable automatic size detection of mixed originals consisting of originals of both metric and inch sizes, set so as to enable the automatic paper size detection of metric and inch sizes.**

Procedure (to enable automatic size detection of mixed originals)

1. Call the Service Mode to the screen.

2. Call the Enhanced Security to the screen.
3. Touch [Engine FW DipSW].
4. Touch [9] and check the key is highlighted (ON state) in reverse video.
5. Touch [END].

### (g) Choice of fusing roller rotation while waiting

- It sets whether to constantly rotate the fusing motor or not while waiting the job for MFP.

| | |
|---|---|
| OFF | The fusing motor stops after 30 minutes in waiting condition. Steadiness while waiting has a priority. (Default) |
| ON | The fusing motor constantly rotates while waiting. It ensures the fusibility when immediately starts printing from the waiting status. |

Procedure

1. Call the Service Mode to the screen.
2. Call the Enhanced Security to the screen.
3. Touch [Engine FW DipSW].
4. Touch [11] and check the key is highlighted (ON state) in reverse video.
5. Touch [END].

### (h) Choice of securing fusibility

- Sets whether or not to conduct printing wait for ensuring fusibility in low-temperature/low-humidity environments.

| | |
|---|---|
| OFF | Without printing wait (Default) |
| ON | With printing wait |

Procedure

1. Call the Service Mode to the screen.
2. Call the Enhanced Security to the screen.
3. Touch [Engine FW DipSW].
4. Touch [13] and check the key is highlighted (ON state) in reverse video.
5. Touch [END].

### (i) Choice of unit simultaneous replacement promotion

- To set whether or not to enable "F.5.3 Control causing inhibited printing for one part when an inhibited-printing event occurs in another part."

| | |
|---|---|
| OFF | To set whether or not to enable "F.5.3 Control causing inhibited printing for one part when an inhibited-printing event occurs in another part." (Default) |
| ON | Disables "Control causing inhibited printing for one part when an inhibited-printing event occurs in another part." |

Procedure

1. Call the Service Mode to the screen.
2. Call the Enhanced Security to the screen.
3. Touch [Engine FW DipSW].
4. Touch [14] and check the key is highlighted (ON state) in reverse video.
5. Touch [END].

### (j) FS-534/PK-520 Punch operation noise suppression choice

- The operating noise generated from the punch unit when punching holes is reduced.

| | |
|---|---|
| OFF | • Full punching force (100%) of the punch motor is applied against the basic weight of all types of paper. |
| ON | • The punching force of the punch motor is controlled in accordance with the thickness of the paper (paper weight). Control the punching force of the punch motor depending on the paper thickness (basic weight). For paper other than the thick paper, 60% force is applied for punching holes. (Default)<br>• Control the operating noise generated when punching holes on the paper other than the thick paper. |

Procedure

1. Call the Service Mode to the screen.
2. Call the Enhanced Security to the screen.
3. Touch [Engine FW DipSW].
4. Touch [17] and check the key is highlighted (ON state) in reverse video.
5. Touch [END].

### (k) Choice of FS-533 tray home position switching

- It switches the tray home position for FS-533.

| | |
|---|---|
| OFF | Tray home position becomes the low limit position. (Default) |
| ON | Tray home position becomes the paper receiving position. |

Procedure

1. Call the Service Mode to the screen.
2. Call the Enhanced Security to the screen.
3. Touch [Engine FW DipSW].
4. Touch [18] and check the key is highlighted (ON state) in reverse video.
5. Touch [END].

### (l) Choice of main scan direction white line correction

- When printing is continued with lower coverage, filming may occur to the transfer belt which may cause the main scan direction white lines.
- By setting this ON, the toner will be supplied to the transfer belt by the toner patch during image stabilization to prevent white lines to occur.
  The toner consumption increases by using this setting. Choose the setting suitable for the user.

| | |
|---|---|
| OFF | Does not conduct toner patch for the white lines (Default) |
| ON | Conducts toner patch for the while lines |

Procedure

1. Call the Service Mode to the screen.
2. Call the Enhanced Security to the screen.
3. Touch [Engine FW DipSW].
4. Touch [22] and check the key is highlighted (ON state) in reverse video.
5. Touch [END].

### (m) Choice of color photo conductor pre-rotation time

- To select whether to enable pre-rotation of the color photo conductor.
- If the pre-rotation of the color photo conductor is executed for users mainly using black printing, consumption of the color photo conductor may get faster. Thus, for those users mainly using black printing, execution of pre-rotation of the color photo conductor can be prohibited.

| | |
|---|---|
| OFF | Execute pre-rotation of the color photo conductor (Default) |
| ON | Not execute pre-rotation of the color photo conductor |

Procedure

1. Call the Service Mode to the screen.
2. Call the Enhanced Security to the screen.
3. Touch [Engine FW DipSW].
4. Touch [23] and check the key is highlighted (ON state) in reverse video.
5. Touch [END].

### (n) Choice of continuous temperature control after printing

- To select the fusing unit temperature adjustment control performed when a print job sent from PC is completed.
- When [Administrator Settings] -> [System Settings] -> [Power Supply/Power Save Settings] -> [Enter Power Save Mode] is set to "Immediately", select whether or not to turn OFF the fusing heater immediately after a print job from PC is completed.

| | |
|---|---|
| OFF | The fusing heater is turned OFF immediately after printing a job sent from PC. (Default) |
| ON | The temperature control continues until the next sleep request is sent from the controller. |

Procedure

1. Call the Service Mode to the screen.
2. Call the Enhanced Security to the screen.
3. Touch [Engine FW DipSW].
4. Touch [24] and check the key is highlighted (ON state) in reverse video.
5. Touch [END].

### (o) ACS parameter choice

- It sets the black printing quantity threshold until switching the transfer belt from all press to K press when a few pages of black printing is included in color printing.
- With the initial setting, productivity has the priority and printing is conducted with all press even when the specified quantity of black printing is included.
  This process shortens the life of the color drum unit due to unnecessary rotation. When this setting is ON, black printing quantity threshold until switching to K press becomes smaller.
  This setting is to be used when the drum unit life should have priority over productivity.

| | |
|---|---|
| OFF | Productivity has priority (default) |
| ON | Life has priority |

Procedure

1. Call the Service Mode to the screen.
2. Call the Enhanced Security to the screen.
3. Touch [Engine FW DipSW].
4. Touch [25] and check the key is highlighted (ON state) in reverse video.
5. Touch [END].

### (p) Choice of printing pause time during temperature increase inside the machine

- The printing pauses for a specified period of time in order to prevent toner from adhering when the temperature inside increases.

| | |
|---|---|
| OFF | Productivity has priority (default) |
| ON | Pause for printing becomes longer. Temperature inside comparatively becomes low which may improve the image quality. |

Procedure

1. Call the Service Mode to the screen.
2. Call the Enhanced Security to the screen.
3. Touch [Engine FW DipSW].
4. Touch [26] and check the key is highlighted (ON state) in reverse video.

5. Touch [END].

### (q) Choice of fusing mode for index paper

- To set fusing temperature when printing on the index paper.
- It controls the occurrence of paper curling when printing on a thin index paper.

| | |
|---|---|
| OFF | Fusing temperature: High (priority on fusing ability: Default) |
| ON | Fusing temperature: Low (priority on controlling paper curling) |

Procedure

1. Call the Service Mode to the screen.
2. Call the Enhanced Security to the screen.
3. Touch [Engine FW DipSW].
4. Touch [28] and check the key is highlighted (ON state) in reverse video.
5. Touch [END].

### (r) Rotation choice of developing unit/K

- At the start or end of a process, reverse rotation of the transfer belt or cleaning of the 2nd transfer roller, the drum unit/K rotates. (The developing unit/K does not rotate.)
- When the drum unit/K rotates for more than 450,000 times, abnormal noise will occur on the drum unit/K.
- When abnormal noise occurs, rotate the developing unit/K to resolve the abnormal noise.
- If abnormal noise occurs even when the drum unit/K rotates for less than 450,000 times, select “OFF/ON” to resolve the abnormal noise.

| SW No. | | |
|---|---|---|
| 29 | 30 | |
| OFF | OFF | If the drum unit/K rotates for more than 450,000 times, rotate the developing unit/K at the time of start or end of a process, reverse rotation of the transfer belt or cleaning of the 2nd transfer roller. (Default) |
| ON | OFF | Prohibit rotation of the developing unit/K at the start or end of a process, reverse rotation of the transfer belt or cleaning of the 2nd transfer roller. |
| OFF | ON | Rotate the developing unit/K at the start or end of a process, reverse rotation of the transfer belt or cleaning of the 2nd transfer roller. |

Procedure

1. Call the Service Mode to the screen.
2. Call the Enhanced Security to the screen.
3. Touch [Engine FW DipSW].
4. Touch [29] or [30], and check the key is highlighted (ON state) in reverse video.
5. Touch [END].

## (4) Notes when using the New Release Disable mode

### (a) Before starting the mode

- Output the list in [Service Mode] -> [List Output] to check the information on the wear-out rate of each unit and keep the Dmax density adjustment value. Replace units that have reached their life or that are near life with new ones, and perform New Release.
- If the toner is empty, start this mode when the toner empty status is resolved by replacing the toner cartridge with a new one or charging the toner.

### (b) During the New Release Disable mode

- The New Release Disable mode is subject to the condition that the New Release Disable mode should not be used for a long period, i.e. duration of printing only several tens of sheets. (Units used in the New Release Disable mode for a long time cannot be guaranteed as new ones.)
- In the New Release Disable mode, the drum unit/K life counter is not reset and it continues to count in a normal manner. If the counter reading becomes close to the value at which an accumulated rotation time excess warning is issued or becomes close to the end of life value, the accumulated rotation time excess warning or the end of life warning can be issued in the New Release Disable mode.
  (If the drum unit/K counter should reach the end of life value while temporarily using a new drum unit/K in the New Release Disable mode, turn OFF the New Release Disable mode, open and close the front door (or turn the main power switch OFF and ON), and perform New Release in a normal manner. In this case, the previous drum unit/K, which has been temporarily removed, cannot be used again.)
- After activating the New Release Disable mode in [Engine FW DipSW], do not turn OFF and ON the main power switch or do not let the machine go into the sleep mode until the work in the New Release mode is completed.
  (In case that the main power switch is turned OFF or the machine goes into the sleep mode, be sure to open the front door and turn the main power switch ON or activate the machine from the sleep mode. Then turn ON the New Release Disable mode and close the front door.)

### (c) After finishing work in New Release Disable mode

- When continuing to use the new unit used in the New Release Disable mode in the same machine, turn OFF the new Release Disable mode and open and close the front door (or turn OFF and ON the main power switch) to perform New Release.
- To reinstall the previous unit used in the machine, open the front door, turn OFF the New Release Disable mode, replace the new unit with the previous unit, and close the front door (or turn the main power switch OFF and ON).
  In this case, perform Initialize + Image Stabilization, Gradation Adjustment, and input of the previous Dmax density adjustment value in service mode. (If these adjustments are not performed, gradation reproducibility cannot be guaranteed.)
- After temporarily using a new drum unit/K in the New Release Disable mode, before reinstalling the previous drum unit/K, be sure to check the reading of the drum unit/K life counter in [Service Mode] -> [Counter] -> [Life] to learn that New Release is not performed on the new drum unit/K, i.e. the counter value have not decreased.

(There is no way to determine whether New Release is performed on the new drum unit/K or not from the appearance of the unit. Checking the counter reading is necessary to avoid bringing back the drum unit/K on which New Release is performed, assuming that the drum unit/K remains new.)

### 7.3.10 Engine Data Backup

- Not used

### 7.3.11 HDD Data Backup

#### (1) Use

- To back up or restore the settings of the machine and the image data stored in the box.

| | |
|---|---|
| Generic format Backup | • Store the setting data for this machine as an XML data and store the data saved in the box as a TIFF-C image to the HDD connected with a USB. However, a data that is saved at 1200dpi in the box cannot be backed up.<br>• Since the free space in the HDD for backup cannot be checked beforehand, after starting the backup, it will be terminated as an error at the time that no space remained in the HDD. |
| KM Format Backup | • Save the settings of the machine as a XML data, and save the image data in the box in internal format (RAW data) to the HDD connected with a USB.<br>• A backup starts after making a confirmation of if the storage is enough. |

#### (a) Target

Settings an image data in the box to be backed up and restored are as follows.

- Setting data for MFP (User Settings, Administrator Settings, part of each settings in Service Mode)
- User authentication, Account track settings information
- One-touch Registration Address Information
- Images saved in the box (User box (Public, Personal, Group, and Encrypted PDF box))
- Information to compose a box (setting data exclusive for box)

#### (b) Requirements

Conditions required to backup/restore are as follows.

- To use a self-power external HDD (a type to supply power from outside)
  A bus-power external HDD shall not be used.
- After connecting an external HDD to the machine via a USB, the data is converted with ext3 format automatically.
- The backup will be executed after the backup data which has already existed in the external HDD is deleted automatically.
- Data of only one model can be saved in the external HDD.
- Cancellation during a backup is allowed. However cancellation during formatting an external HDD is not allowed.
- Operation of backup/restore is not allowed when a trouble or warning occurred.
- Operation of backup/restore is not allowed when a timer job has been reserved.

#### (2) Setting item

- Generic format Backup
- KM Format Backup
- Restore
- Enter Password

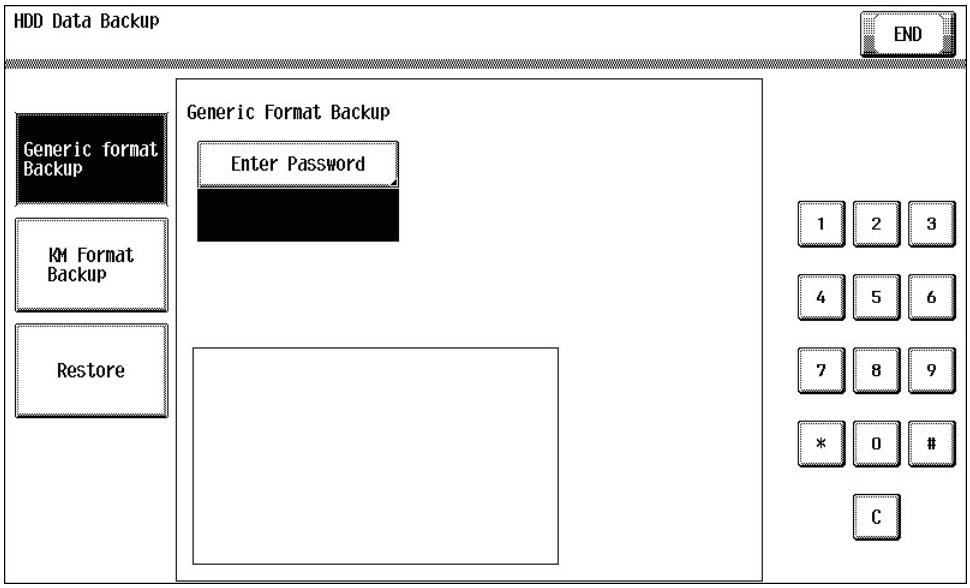


#### (3) Procedure

**NOTE**

- **Set [Administrator Settings] [Security Setting] -> [Security Details] -> [HDD Data Backup (5/5)] to [Allow]. If [Restrict] is set, the machine cannot be used.**
- **Be sure to turn OFF and ON the main power switch of the machine after performing backup/restore.**

#### (a) Backup

1. Connect the USB cable of an external HDD to the USB port of an MFP. (USB NG will be displayed when the HDD is not recognized correctly.)
2. Call the Service Mode to the screen.
3. Call the Enhanced Security to the screen.
4. Touch [HDD Data Backup].
5. Select [Generic format Backup] or [KM Format Backup].
6. Touch [Enter Password], enter an encryption password using 1 to 32 characters, then touch [END].
7. Touch [Start]. ("Processing" will be displayed.)
   Touch [Cancel] if you want to stop the backup.
8. After completing the backup, [Result OK] will be displayed.
9. Turn OFF and ON the main power switch.

#### (b) Restore

1. Connect the USB cable of an external HDD to the USB port of an MFP.
2. Call the Service Mode to the screen.
3. Call the Enhanced Security to the screen.
4. Touch [HDD Data Backup].
5. Select [Restore].
6. Touch [Enter Password], enter a decryption password using 1 to 32 characters, then touch [END].
7. Touch [Start]. ("Processing" will be displayed.)
   Touch [Cancel] if you want to stop the restore.
8. After completing the restore, [Result OK] will be displayed.
9. Turn OFF and ON the main power switch.

### 7.3.12 TPM Setting

- It is displayed when the optional i-Option LK-115 v2 is enabled.

#### (1) Initialization

##### (a) Use

- To initialize the memory area installed on the TPM chip.

**NOTE**

- **Be sure to perform it if the i-Option LK-115 v2 is enabled.**

##### (b) Procedure

1. Touch [Initialization].
2. Press the Start key.

#### (2) Status report

##### (a) Use

- To notify an error which is detected by the TPM chip self diagnosis, and output the diagnosis result, or output a report file to a USB memory.
- The TPM chip self diagnosis is conducted when the machine starts to run.

##### (b) Procedure (List Output)

1. Touch [Status report].
2. Touch [List Output].
3. Press the Start key.
4. The status report is output.

##### (c) Procedure (USB save)

1. Connect a USB memory to the USB port.
2. Touch [Status report].
3. Touch [USB save].
4. Press the Start key.
5. The status report file is saved to the USB memory.

# 8. BILLING SETTING

## Billing Setting

- When using the optional upgrade kit UK-211 and license kit LK-102 v3, LK-104 v3, LK-105 v4, LK-106, LK-107, LK-108, LK-110 v2, LK-111 , LK-114 or LK-115 v2 v2, license management is done with [Service Mode] -> [Billing Setting] -> [License Management].
- [License Management] can set Activation/Deactivation of each i-Option functions, Repair/Initialize of functions for troubleshooting, or etc.

## 8.1 List of billing setting

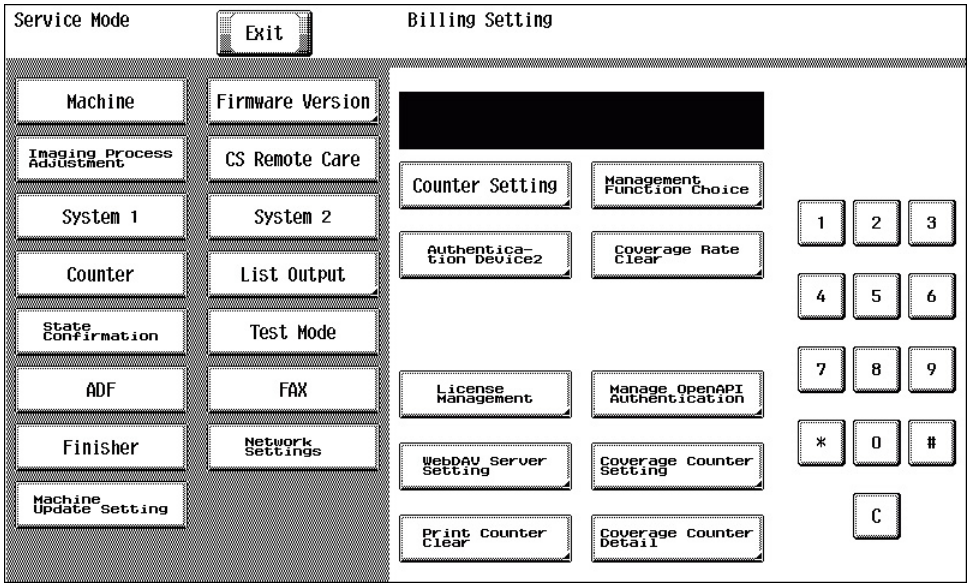


| Billing Setting | | Ref. page |
|---|---|---|
| Counter Setting | | I.8.3.1 Counter Setting |
| Management Function Choice | | I.8.3.2 Management Function Choice |
| Authentication Device 2 | | I.8.3.7 Authentication Device 2 |
| Coverage Rate Clear | | I.8.3.9 Coverage Rate Clear |
| License Management | Activation | I.8.3.10 License management - Activation |
| | Deactivation | I.8.3.11 License management - Deactivation |
| | Repair *1 | I.8.3.12 License management - Repair |
| | Initialize | I.8.3.13 License management - Initialize |
| | Request Code | I.8.3.14 License management - Request Code |
| | List | I.8.3.15 License management - List |
| | Function List | I.8.3.16 License management - Function List |
| Manage OpenAPI Authentication | Restriction Code | I.8.3.17.(1) Restriction Code |
| | Region Code | I.8.3.17.(2) Region Code |
| WebDAV Server Setting | | I.8.3.18 WebDAV Server Setting |
| Coverage Counter Setting | | I.8.3.19 Coverage Counter Setting |
| Print Counter Clear | | I.8.3.20 Print Counter Clear |
| Coverage Counter Detail | | I.8.3.21 Coverage Counter Detail |

*1: It is displayed only when “License management error” occurs.

## 8.2 Starting/Exiting

### 8.2.1 Starting procedure

1. Call the Service Mode to the screen.
2. Press the following keys in this order.
   - Stop -> 9
3. Select a mode.

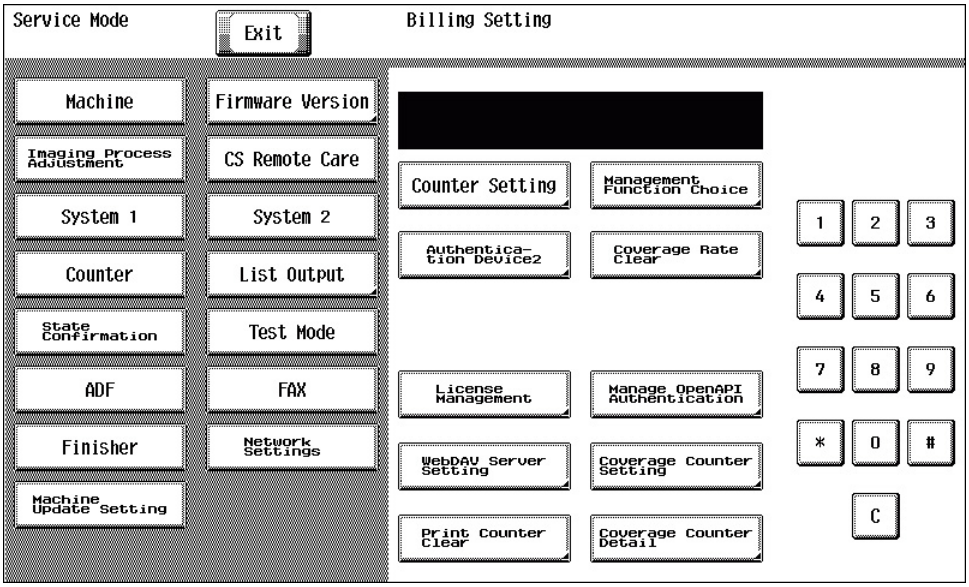


### 8.2.2 Exiting procedure

1. Touch [Exit].
2. Turn OFF the main power switch. Wait 10 seconds, then turn ON the main power switch again.

## 8.3 BILLING SETTING

### 8.3.1 Counter Setting

#### (1) Use

- To set the counting method for the total counter, size counter and banner paper counter.
- To set the size regarded as the large size (2 counts.)
- Use to change the counting method for the counters.

#### (2) Default setting (Total Counter Mode)

- Japan: Mode 1
- US, Europe, Others 1, Others 2, Others 3, Others 4, Others 5: Mode 2

#### (3) Setting item (Total Counter Mode)

- Mode 1: 1 count per copy cycle
- Mode 2: Large size is double counts

**NOTE**

- **The content of this setting is reflected in the count method with the key counter.**

#### (4) Default setting (Large Size Counter Mode)

- US: A3 and 11 x 17
- Europe, Others 1, Others 2, Others 3, Others 4, Others 5: A3, B4, 11 x 17, and 8 1/2 x 14
- Japan: Not counted

#### (5) Setting item (Large Size Counter Mode)

| | |
|---|---|
| A3/11 x 17 | When it exceeds 279 mm in the main scan direction and 420 mm in the sub scan direction (exceeds 399 mm at fax scan), it is regarded as the large size. |
| A3/B4/11 x 17/8 $^{1}/_{2}$ x 14 | When it exceeds 215 mm in the main scan direction and 355 mm in the sub scan direction (exceeds 337 mm at fax scan), it is regarded as the large size. |
| A3/11 x 17/B4/8 $^{1}/_{2}$ x 14/Foolscap | When it exceeds 203 mm in the main scan direction and 330 mm in the sub scan direction (exceeds 313 mm at fax scan), it is regarded as the large size. (However the size in the main scan direction changes according to the foolscap size setting.) |

- Not counted
- A3/11 × 17
- A3/B4/11 × 17/8 $^{1}/_{2}$ × 14
- A3/11 × 17/B4/8 $^{1}/_{2}$ × 14/Foolscap

**NOTE**

- **When the "Large Size Counter Mode" is set to “Not count”, the machine operate with following conditions regardless of the each control panel settings.**
  - **Total Counter: Mode1**
  - **Banner Paper Count Mode: Mode1**
  - **Banner Counter Double Count Mode: OFF**

### (6) Count-up table

| Print mode | 1-Sided | | | | 2-Sided | | | |
|---|---|---|---|---|---|---|---|---|
| Size | Sizes other than those specified | | Specified sizes | | Sizes other than those specified | | Specified sizes | |
| Type \ Mode | Mode | | Mode | | Mode | | Mode | |
| | 1 | 2 | 1 | 2 | 1 | 2 | 1 | 2 |
| Total | 1 | 1 | 1 | 2 | 2 | 2 | 2 | 4 |
| Size | 0 | 0 | 1 | 1 | 0 | 0 | 2 | 2 |
| 2-sided Total | 0 | 0 | 0 | 0 | 1 | 1 | 1 | 1 |

- 0: No count
- 1: 1 count
- 2: 2 counts
- 3: 3 counts
- 4: 4 counts

### (7) Default setting (Banner Paper Counter Mode)

- Mode 4

### (8) Setting item (Banner Paper Counter Mode)

- When printing on the long paper (457.2 mm or over), the counting value will be the total of the value set by the total counter mode and the value by this setting.

| | |
|---|---|
| Mode 1 | 0 count |
| Mode 2 | 1 count |
| Mode 3 | + 2 counts (457.2 to 915.0 mm will be + 1 count) |
| Mode 4 | + 3 counts (457.2 to 686.0 mm will be + 1 count, and 686.1 to 915.0 mm will be + 2 count) |

### (9) Default setting (Banner Counter Double Count Mode)

- OFF

### (10) Setting item (Banner Counter Double Count Mode)

- ON
- OFF

**NOTE**

- **To set whether to use normal count or double count when printing long size paper.**
- **When "ON" is selected, double count is applied to only long size paper.**
- **The count method used when printing long size paper depends on the combination of the Counter Setting: Settings in Banner Paper Counter Mode and Banner Counter Double Count Mode. The following shows details on count methods that are the combination of each setting.**

| Total Counter | Banner Paper Counter Mode | Banner Counter Double Count Mode | Paper size | Count |
|---|---|---|---|---|
| Mode 1 | Mode 1 | OFF | Normal size | 1 count |
| | | | Long size | 1 count |
| | | ON | Normal size | 1 count |
| | | | Long size | 2 counts |
| | Mode 2 | OFF | Normal size | 1 count |
| | | | Long size | 2 counts |
| | | ON | Normal size | 1 count |
| | | | Long size | 4 counts |
| | Mode 3 | OFF | Normal size | 1 count |
| | | | Long size 457.3 to 915.0 mm | 2 counts |
| | | | Long size 915.1 mm or more | 3 counts |
| | | ON | Normal size | 1 count |
| | | | Long size 457.3 to 915.0 mm | 4 counts |
| | | | Long size 915.1 mm or more | 6 counts |
| | Mode 4 | OFF | Normal size | 1 count |
| | | | Long size 457.3 to 686.0 mm | 2 counts |
| | | | Long size 686.1 to 915.0 mm | 3 counts |

| | | | | |
|---|---|---|---|---|
| | | | Long size 915.1 mm or more | 4 counts |
| | | ON | Normal size | 1 count |
| | | | Long size 457.3 to 686.0 mm | 4 counts |
| | | | Long size 686.1 to 915.0 mm | 6 counts |
| | | | Long size 915.1 mm or more | 8 counts |
| Mode 2 | Mode 1 | OFF | Small Size | 1 count |
| | | | Specified sizes | 2 counts |
| | | | Long size | 2 counts |
| | | ON | Small Size | 1 count |
| | | | Specified sizes | 2 counts |
| | | | Long size | 4 counts |
| | Mode 2 | OFF | Small Size | 1 count |
| | | | Specified sizes | 2 counts |
| | | | Long size | 3 counts |
| | | ON | Small Size | 1 count |
| | | | Specified sizes | 2 counts |
| | | | Long size | 6 counts |
| | Mode 3 | OFF | Small Size | 1 count |
| | | | Specified sizes | 2 counts |
| | | | Long size 457.3 to 915.0 mm | 3 counts |
| | | | Long size 915.1 mm or more | 4 counts |
| | | ON | Small Size | 1 count |
| | | | Specified sizes | 2 counts |
| | | | Long size 457.3 to 915.0 mm | 6 counts |
| | | | Long size 915.1 mm or more | 8 counts |
| | Mode 4 | OFF | Small Size | 1 count |
| | | | Specified sizes | 2 counts |
| | | | Long size 457.3 to 686.0 mm | 3 counts |
| | | | Long size 686.1 to 915.0 mm | 4 counts |
| | | | Long size 915.1 mm or more | 5 counts |
| | | ON | Small Size | 1 count |
| | | | Specified sizes | 2 counts |
| | | | Long size 457.3 to 686.0 mm | 6 counts |
| | | | Long size 686.1 to 915.0 mm | 8 counts |
| | | | Long size 915.1 mm or more | 10 counts |

**NOTE**

- **When the "Large Size Counter Mode" is set to “Not count”, the machine operate with following conditions regardless of the each control panel settings.**
  - **Total Counter: Mode1**
  - **Banner Paper Count Mode: Mode1**
  - **Banner Counter Double Count Mode: OFF**

### 8.3.2 Management Function Choice

- To set whether or not the Key Counter, Management Device (Data controller), Authentication Device, or Vendor are to be mounted.

**NOTE**

- **This is not displayed when [Administrator Settings] -> [Security Settings] -> [Enhanced Security Mode] is set to “ON”.**
- **When the setting shows that [Management Device 2] or [Vendor 2] is mounted, the following applications will be invalid.**
  **PC FAX transmission / HDD TWAIN/PS Box Operator / PS Scan Direct / PS Job Spooler / Fiery: Scan to Box**
  **Also, [Administrator Settings] -> [Security Settings] -> [Function Management Settings] -> [Network Function Usage Settings] will be set to “OFF”.**

### 8.3.3 Management Function Choice - Key Counter IF Vendor

- Not used

### 8.3.4 Management Function Choice - Key Counter Only

#### (1) Use

- To set whether or not the key counter is installed.
- Set when the key counter is mounted.
- Select [Color Mode] and [Message] when the key counter is mounted.

#### (2) Color Mode

- When [Mode 1] is set on [Total Counter Mode] after selecting [Billing Setting] -> [Counter setting].

| | |
|---|---|
| Mode 1 | 1 count per 1 print cycle |
| Mode 2 | 2 counts per 1 print cycle |
| Mode 3 | 3 counts per 1 print cycle |
| Mode 4 | 4 counts per 1 print cycle |
| Mode 5 | 5 counts per 1 print cycle |

- When [Mode 2] is set on [Total Counter Mode] after selecting [Billing Setting] -> [Counter setting] and large size is selected on [Large Size Counter Mode]

| | |
|---|---|
| Mode 1 | 2 counts per 1 print cycle |
| Mode 2 | 4 counts per 1 print cycle |
| Mode 3 | 6 counts per 1 print cycle |
| Mode 4 | 8 counts per 1 print cycle |
| Mode 5 | 10 counts per 1 print cycle |

- When [Mode 2] is set on [Total Counter Mode] after selecting [Billing Setting] -> [Counter setting] and sizes other than large size are selected on [Large Size Counter Mode] Mode 1

| | |
|---|---|
| Mode 1 | 1 count per 1 print cycle |
| Mode 2 | 2 counts per 1 print cycle |
| Mode 3 | 3 counts per 1 print cycle |
| Mode 4 | 4 counts per 1 print cycle |
| Mode 5 | 5 counts per 1 print cycle |

#### (3) Message

##### (a) Procedure

- Select the message type when the administrative unit is mounted.

| | |
|---|---|
| Type 1 | Message for key counter |
| Type 2 | Message for card scanning |
| Type 3 | Message for ID management |
| Type 4 | Message for remote SW |

##### (b) Setting item

- Type 1
- Type 2
- Type 3
- Type 4

#### (4) Confirmation copy

##### (a) Procedure

- Set whether to allow a confirmation copy when a key counter is installed.

##### (b) Default setting

- Ban

##### (c) Setting item

- License
- Ban

#### (5) The next job reservation

##### (a) Use

- Set whether to allow the reservation of the next job when a key counter is installed.

#### (b) Default setting

- Ban

#### (c) Setting item

- License
- Ban

**NOTE**

- **The setting is available only when user authentication and account track are set "OFF" with [Administrator Settings] -> [User Authentication/Account Track] -> [General Settings].**

### (6) Count Setting

#### (a) Use

- To set the count timing used when the key counter is installed.

#### (b) Default setting

- Paper feed

#### (c) Setting item

- Paper feed
- Paper out

## 8.3.5 Management Function Choice - Management Device-2

### (1) Use

- To set whether or not the management device 2 is installed.

| | |
|---|---|
| Mode 1 | Use contact type device. (Logout with ID key is not allowed) |
| Mode 2 | Use non-contact type device. (Logout with ID key is allowed.) |

### (2) Setting item (Management Setting)

- Mode 1
- Mode 2
- When selecting [Mode 2], select whether to use "User Authentication" concurrently.

**NOTE**

- **The setting is not available when either "External Server Authentication" of user authentication, "Password Only" of account track, "Do Not Synchronize" of user authentication and account track or "ON" of public user access has been set with [Administrator Settings] -> [User Authentication/Account Track] -> [General Settings].**

## 8.3.6 Management Function Choice - Vendor 2

### (1) Use

- To set whether or not the vendor 2 is installed.

  **NOTE**

  - **When using the vendor along with the key counter, inserting the key counter will set it to the "Key Counter Mode" and removing it will set it to the "Vendor Mode".**

### (2) Procedure

- Select color mode and message of key counter. (Only for key counter, the type of the color mode and message are same after mounting.)

### (3) Procedure (Confirmation copy)

#### (a) Use

- Set whether to allow a confirmation copy when a key counter is installed.

#### (b) Default setting

- Ban

#### (c) Setting item

- License
- Ban

### (4) Procedure (The next job reservation)

#### (a) Use

- Set whether to allow the reservation of the next job when a key counter is installed.

#### (b) Default setting

- Ban

#### (c) Setting item

- License

- Ban

### (5) Procedure (Count Setting)

#### (a) Use

- To set the count timing used when the key counter is installed.

#### (b) Default setting

- Paper feed

#### (c) Setting item

- Paper feed
- Paper out

### (6) Procedure (Message)

#### (a) Use

- Select message of vendor.

| | |
|---|---|
| Type 1 | Message for key counter |
| Type 2 | Message for card scanning |
| Type 3 | Message for ID management |

#### (b) Setting item

- Type 1
- Type 2
- Type 3

## 8.3.7 Authentication Device 2

### (1) Use

- To set whether or not the authentication device 2 is installed.
- Set when the authentication unit (biometric type or card type) is mounted.

**NOTE**

- **When using the authentication device including AU-102, AU-201 and AU-201S the loadable device driver needs to be installed.**
  **I.5.16.29 Driver Install**
  **E.1.3.1 IC card information setting tool of AU-201/AU-201S/AU-202H/OMNIKEY 5427CK (AU-205H)/SCL-010/YSoft card reader**

| | |
|---|---|
| Card | Uses IC card authentication system (AU-201/AU-201S/SCL-010/AU-201H/AU-202H/YSoft card reader/OMNIKEY 5427CK (AU-205H)). |
| Body | Uses biometrics (finger vein) authentication system (AU-102) |
| Card 3 | Uses IC card authentication device for PKI card system |

- When selecting [Body], set a film timeout interval, capture trial time and authentication trial time.
- When selecting [Card], a response timeout interval is displayed. (The interval is unchangeable.)
- [Card 3] will be displayed only when [Service Mode] -> [System 2] -> [Software Switch Setting] shows that switch No. 12 is set to [00000010]/[02] (bit value/HEX value).

### (2) Setting item

Authentication Mode

- Card
- Body

### (3) Installation procedures of authentication unit

#### (a) AU-102

1. Install the AU-102 loadable driver (BIO_LDR.tar) to the main unit. *1
2. Install the AU-102 to the main unit.
3. Select [Body] in [Service Mode] -> [Billing Settings] -> [Authentication Device 2].
4. Turn off the main power switch and turn it on again more than 10 seconds after.
5. Register the authentication user data.

Note *1

- Use the loadable driver in combination with the following firmware version.

bizhub C368/C308 MFP card version: A7PU0Y0-F000-G00-13

| Authentication units | Compatible IC cards | Loadable driver versions |
|---|---|---|
| AU-102 | Biometric | A7AH0Y0-A900-G00-01 |

#### (b) AU-201/AU-201 S

1. Install the loadable driver (ICC_LDR.tar) to the main unit. *1,*2,*3
2. Install the AU-201/AU-201S to the main unit.
3. Select [Card] in [Service Mode] -> [Billing Settings] -> [Authentication Device 2].
4. Turn off the main power switch and turn it on again more than 10 seconds after.

5. Register the authentication card data.

Note *1
- A combination of the loadable driver and the IC card information setting file will be supplied as a loadable driver by KM.

Note *2
- The loadable driver to be installed varied according to the type of the card. Identify the type of the card requiring authentication and install the correct loadable driver.
- Use the loadable driver in combination with the following firmware version.
  bizhub C368/C308 MFP card version: A7PU0Y0-F000-G00-13

| Authentication units | Loadable driver name (KM standard setting) | Compatible IC cards | Loadable driver versions |
|---|---|---|---|
| AU-201 | AU-201 loadable driver (FeliCa IDm) | FeliCa IDm, FeliCa SSFC, FeliCa FCF, FeliCa FCF(Campus), TypeA | A7AH0Y0-A502-G00-02 |
| | AU-201 loadable driver (FeliCa Private) | FeliCaPrivate | A7AH0Y0-A500-G00-02 |
| AU-201S | AU-201S loadable driver | FeliCa IDm, FeliCa SSFC, FeliCa FCF, FeliCa FCF(Campus), TypeA, FeliCaPrivate | A7PU0Y0-A023-G00-02 |

Note *3
- If FeliCa IDm, FeliCa SSFC, FeliCa Private, or related card requiring detailed settings is to be used, make the detailed settings by using either one of the following methods:
  1. Using the Auth Device Tool Advanced for AU-201/AU-201S, prepare a combination of the loadable driver and the IC card information setting file and export it as a loadable driver.
     E.1.3.1.(3) IC card information setting procedures
  2. Using the Auth Device Tool Advanced for AU-201/AU-201S, prepare the IC card information setting file only and install the loadable driver in the MFP. Then, using the PageScope Data Administrator, write the IC card information setting file in the MFP.
     E.1.3.1.(3) IC card information setting procedures

E.g.: Information setting sample when the FeliCa SSFC card is used

| Information to be obtained from the administrator | | |
|---|---|---|
| Items of Felica SSFC detail setting | Sample-data (decimal number) | Setting value (hexadecimal number) |
| Room number | 37 | 00 25 |
| Floor number | 15 | 00 0F |
| Building number | 50 | 00 32 |
| Area number | 85 | 00 55 |
| Security level | 2 | 00 02 |
| Company identification code (CL code) *1 | 06BGLQVX17 (ASCII code) | 30 36 42 47 4C 51 56 58 31 37 |
| Company code *2 | CompanyA (ASCII code) | CompanyA |

*1: The character length of the company code is 10 bytes.
*2: Use alphabetical upper case/lower case characters and numeric characters for Company code. When the company code is not set, this space will be left blank.

### (c) Miscellaneous card readers

- The same setting method as that for AU-201/AU-201S applies for other card readers.
- The following loadable drivers are necessary.
- Use the loadable driver in combination with the following firmware version.
  bizhub C368/C308 MFP card version: A7PU0Y0-F000-G00-13

| Authentication units | Loadable driver name (KM standard setting) | Compatible IC cards | Loadable driver versions |
|---|---|---|---|
| SCL-010 | SCL-010 loadable driver (Default: TypeA) *1, *2 | TypeA, FeliCa IDm, Mifare | A7AH0Y0-A511-G00-02 |
| AU-201H | AU-201H loadable driver | HID Prox *4 | A7AH0Y0-A001-G00-02 |
| AU-202H | AU-202H loadable driver *2 | HID iClass | A7AH0Y0-A300-G00-02 |
| OMNIKEY 5427CK (AU-205H) | 5427CK (AU-205H) loadable driver*2 | HID Prox, HID iCLASS, TypeA , FeliCa IDm *5 | A7PU0Y0-A015-G00-03 |
| KM USB Reader v2 MultiReader HF | Loadable driver for YSoft card reader (Default: HID Prox) *3 | Mifare | A7AH0Y0-A521-G00-01 |
| KM USB Reader v2 Legic Advant | | LEGIC | |
| KM USB Reader v2 ASK FSK 125kHz | | EM4100, EM4102, RFID 125kHz | |
| KM USB Reader v2 Mot/Ind W26 | | Indala | |
| KM USB Reader v2 HID Prox | | HID Prox | |
| KM USB Reader v2 HID iCLASS | | HID iCLASS | |

Note *1
- A combination of the loadable driver and the IC card information setting file will be supplied as a loadable driver by KM.

Note *2
- If cards of FeliCa IDm of SCL-010, HID iClass of AU-202H or HID iClass of OMNIKEY 5427CK (AU-205H) that require detailed settings are to be used, make the detailed settings by using either one of the following methods:
  1. Using the Auth Device Tool Advanced for SCL-010, Auth Device Tool Advanced for AU-202H or Auth Device Tool Advanced for 5427CK (AU-205H), prepare a combination of the loadable driver and the IC card information setting file and export it as a loadable driver.
     E.1.3.1.(3) IC card information setting procedures
  2. Using the Auth Device Tool Advanced for SCL-010, Auth Device Tool Advanced for AU-202H or Auth Device Tool Advanced for 5427CK (AU-205H), prepare the IC card information setting file only and install the loadable driver in the MFP. Then, using the PageScope Data Administrator, write the IC card information setting file in the MFP.
     E.1.3.1.(3) IC card information setting procedures

Note *3
- If a YSoft card reader is used, all types of card will be reported as HID Prox card to the authentication program (Default).
- To report the card type other than HID Prox to the authentication program, choose the corresponding card type shown in the following list.

| Card Reader Name | Readable Card Type | Card type to be reported to the authentication program (Default) *3-5, *3-7 | IC Card Information Setting (card type to be reported) *3-6 E.1.3.1 IC card information setting tool of AU-201/AU-201S/AU-202H/ OMNIKEY 5427CK (AU-205H)/ SCL-010/YSoft card reader |
|---|---|---|---|
| KM USB Reader v2 MultiReader HF | Mifare | HID Prox | TypeA (1) *3-1,*3-4 |
| KM USB Reader v2 Legic Advant | LEGIC | HID Prox | TypeA (1) *3-1,*3-4 |
| KM USB Reader v2 ASK FSK 125kHz | EM4100, EM4102, RFID 125kHz | HID Prox | EM4100/ EM4102/ RFID 125kHz |
| KM USB Reader v2 Mot/Ind W26 | Indala | HID Prox | Indala |
| KM USB Reader v2 HID Prox | HID Prox | HID Prox | HID Prox (1) *3-2,*3-4 |
| KM USB Reader v2 HID iCLASS | HID iCLASS | HID Prox | HID iCLASS (1) *3-3,*3-4 |

- *3-1 The content (ID) to be read from the type A card setting differs from which to be read by using AU-201/AU-201S.
- *3-2 The content (ID) to be read from the HID Prox card setting differs from which to be read by using AU-201H.
- *3-3 The content (ID) to be read from the HID iCLASS card setting differs from which to be read by using AU-202H.
- *3-4 When add the YSoft card reader to the authentication network composed of the present AU-201, 201S, 201H and 202H, the ID may vary depending on the card reader. Therefore, it is required to set the card type to TypeA (1), HID Prox (1) or HID iCLASS (1) and register the card again.
- *3-5 For the content to be read from the HID Prox card, since the ID length is fixed to 16 bytes, the unused part will be bridged with 0xFF.
- *3-6 If a card type other than HID Prox is selected, the card ID type will be set to up to 512 bytes, the card ID length will be reported together with the card ID.
- *3-7 If the card type is set to HID Prox by using the LDAP-IC card authentication, specify the card ID type to be sent to the LDAP server as shown below.
  1. Software switch No.135 Hex: 00 Reports that the 1st byte shows the ID length of the card, the 2nd byte and after shows the card ID. (Default)
  2. Software switch No.135 Hex: 01 Reports the card ID with the ID length including the 1st byte.

Note *4
- If the card type is set to HID Prox by using the LDAP-IC card authentication, specify the card ID type to be sent to the LDAP server as shown below.
  1. Software switch No.135 Hex: 00 Reports that the 1st byte shows the ID length of the card, the 2nd byte and after shows the card ID. (Default)
  2. Software switch No.135 Hex: 01 Reports the card ID with the ID length including the 1st byte.

Note *5
- To use FeliCa, make either of the following settings.
  - Select [Felica] at [Administrator Settings] -> [User Authentication/Account Track] -> [Authentication Device Settings] -> [General Settings] -> [Card Authentication] -> [IC Card type setting].
  - Although [Use Card Reader Settings] is also selectable at [Administrator Settings] -> [User Authentication/Account Track] -> [Authentication Device Settings] -> [General Settings] -> [Card Authentication] -> [IC Card type setting], "FeliCa" is dedicated for the card reader (OMNIKEY5427CK) settings.
  - Make card reader (OMNIKEY5427CK) settings with the tool that is exclusively used for PC settings and downloaded from the HID web page.

### 8.3.8 Setting items that automatically change the setting values

**NOTE**
- **Performing the setup for each unit to be mounted will internally change the setting values below. It needs resetting when cancelling the setting in order to set back to “not mounted” because the setting value will remain.**

### (1) When the vendor2 or authentication device 2 is mounted

| Setting Item | | Vendor 2 | Authentication Device 2 |
|---|---|---|---|
| Utility | Default Copy Settings | Factory Default | - |
| | Default Scan/Fax Settings | Factory Default | - |
| | Copy Operating Screen | [Yes] | - |
| | Fax Active Screen | Tx/Rx Display [Yes] | - |
| | Scan/Fax Settings -> Default Tab | Direct Input | - |
| Administrator Settings | Usage Settings for Each Function | Copy, PC print, and Send Data will be set to “ON”. Others Prints will be set to “OFF”. | |
| | Administrator Security Levels | Prohibit | - |
| | Restrict Access to Job Settings | Changing Job Priority, Delete Other User Jobs, Registering and Changing Addresses, Changing Zoom Ratio will be set to “Restrict”. | - |
| | Job Priority Operation Settings | Skip Job (Fax) and Skip job (Copy, Print) will be set to “Yes”. | - |
| | Forward TX Setting | No | - |
| | Fax Settings -> Memory RX Setting | Password for Memory RX Setting is set to the default value of the administrator password | - |
| | OpenAPI Settings | Access Setting will be set to “Restrict” and Authentication will be changed to “OFF” setting. | - |
| | DPWS Settings -> Printer Settings/ Scanner Settings | OFF | - |
| | Image Log Transfer Settings | OFF | - |
| Service Mode | Software Switch Setting | SW No. 63 will be set to [00000000] at Bit assignment/[00] at HEX assignment. | - |
| | FAX | [System] -> [Display Setting] -> [Re-Transmission] will be set to “OFF”. | - |

### (2) When the key counter IF vendor or management device 2 is mounted

| Setting Item | | Key counter IF Vendor | Management Device 2 |
|---|---|---|---|
| Utility | Default Copy Settings | Factory Default | - |
| | Default Scan/Fax Settings | Factory Default | - |
| | Copy Operating Screen | [Yes] | - |
| | Fax Active Screen | Tx/Rx Display [Yes] | - |
| | Scan/Fax Settings -> Default Tab | Direct Input | - |
| Administrator Settings | Usage Settings for Each Function | Copy, PC print will be set to “ON”. Send Data, Others Prints will be set to “OFF”. | Copy, PC print, Send Data, and Others Prints will be set to “ON”. |
| | Administrator Security Levels | Prohibit | - |
| | Weekly Timer ON/OFF Settings | OFF | - |
| | Restrict Access to Job Settings | Changing Job Priority, Delete Other User Jobs, Registering and Changing Addresses, Changing Zoom Ratio will be set to “Restrict”. | - |
| | External Memory Function Settings | External Memory Document Scan will be set to "OFF". Save Document and Print Document will be set to "OFF". | - |
| | Fax Settings -> Memory RX Setting | Password for Memory RX Setting is set to the default value of the administrator password | - |
| | Forward TX Setting | No | - |
| | Line Parameter Setting | - | Receive Mode will be changed to “Auto RX”. |
| | OpenAPI Settings | Access Setting will be set to “Restrict” and Authentication will be changed to “OFF” setting. | - |
| | Apply Stamps/Stamp | No | - |
| | Apply Stamps/Copy Protect | No | - |
| | Apply Stamps/Stamp Repeat | No | - |
| | Apply Stamps/Registered Overlay | No | - |

| Setting Item | | Key counter IF Vendor | Management Device 2 |
|---|---|---|---|
| | Apply Stamps/Header/Footer | No | - |
| | Apply Stamps/Page Number/Text Color | Black | - |
| | Apply Stamps/Date/Time/Text Color | Black | - |
| | DPWS Settings -> Printer Settings/ Scanner Settings | OFF | |
| | Image Log Transfer Settings | OFF | - |
| Service Mode | Software Switch Setting | SW No. 63 will be set to [00000000] at Bit assignment/[00] at HEX assignment. | - |
| | FAX | [System] -> [Display Setting] -> [Re-Transmission] will be set to “OFF”. | - |

### 8.3.9 Coverage Rate Clear

#### (1) Use

- To clear the coverage rate.

#### (2) Procedure

- Touching [END] key will clear the coverage rate.

#### (3) Default setting

- Unset

#### (4) Setting item

- Set
- Unset

### 8.3.10 License management - Activation

#### (1) Functions

- To activate i-Option functions.

#### (2) Use

- To activate i-Option functions with CE.
- The functions can be activated by selecting the desired function and enter the appropriate license code and function code.
- Administrators also can carry out the procedure No.14 or later step to activate i-Option functions through Administrator Settings.

#### (3) Procedure

**NOTE**

- **You need to access License Management System (LMS) to implement each function setting.**
- **Before accessing the LMS, CE are required to register the E-mail address and the password in the LMS. To register, click [CE Initial Registration] that is located in the upper right of CE Login screen.**

1. Prepare “token certification.”
2. Access the following URL using the PC connected to the Internet.
   https://lms.konicaminolta.com/license/KM/support.aspx
3. Click [CE Login].

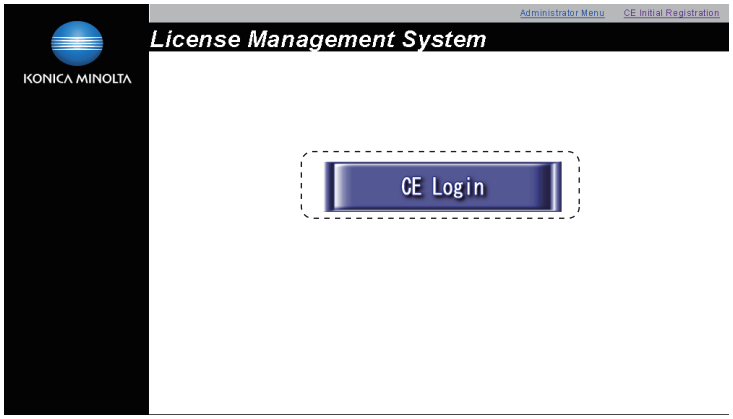


4. Enter [E-Mail Address] and [Password], and click [Login].

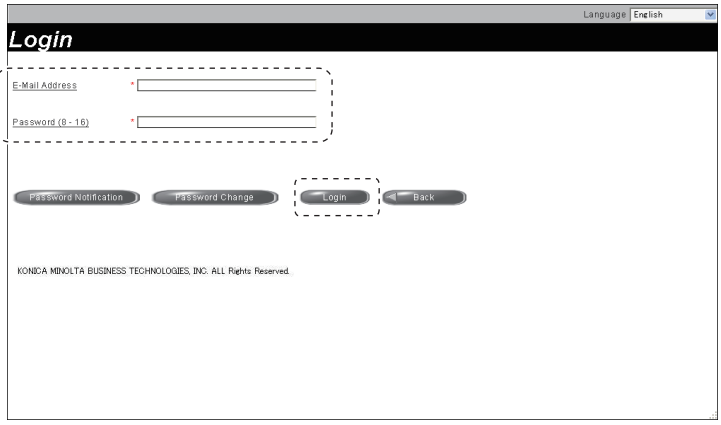


5. Click [Generate License Code].

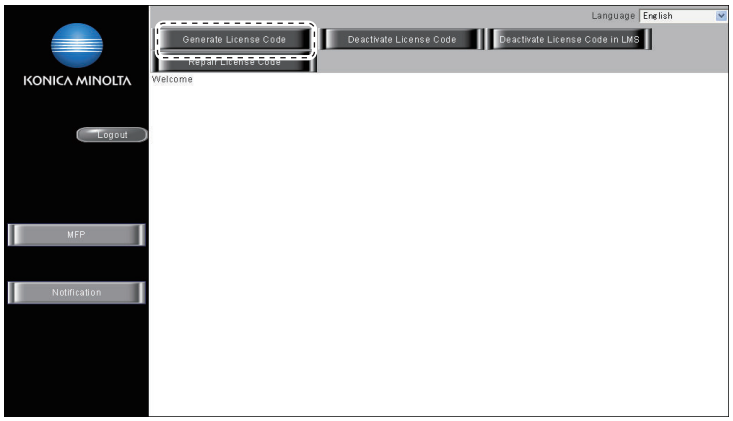


6. Enter the serial number of the target MFP, and click [Next].
**NOTE**
- **Make sure to enter alphabet letters of the serial number in all capital letters.**

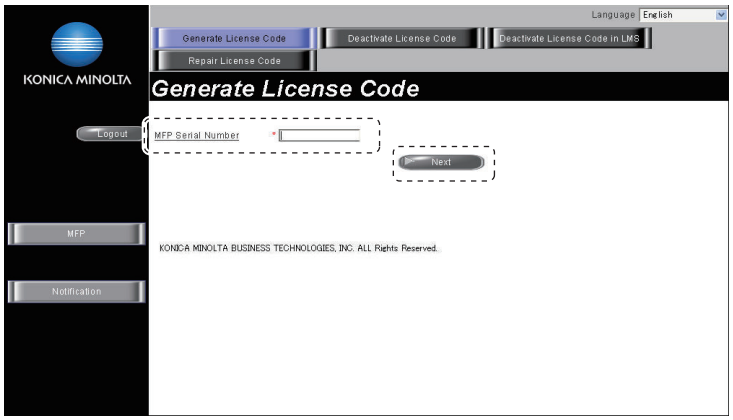


7. Click [Next].

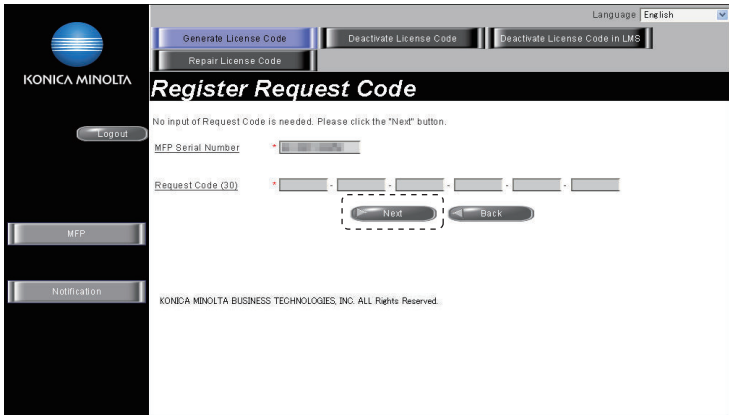


8. Enter the token number written in the token certification, and select the product description.
9. Click [Add].

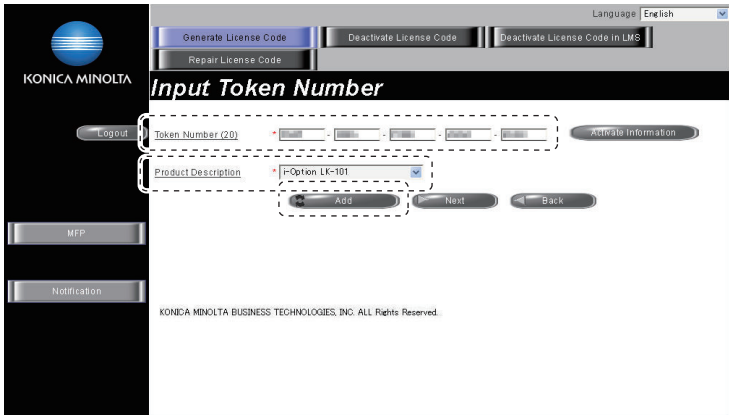


10. Confirm the registered items, and click [Next].

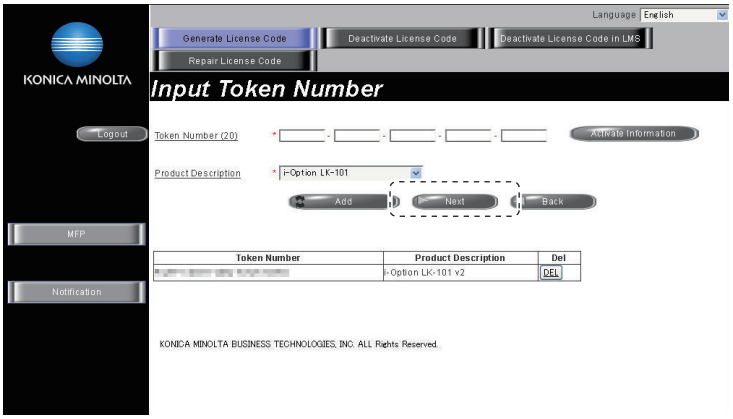


11. Click [Generate License Code].

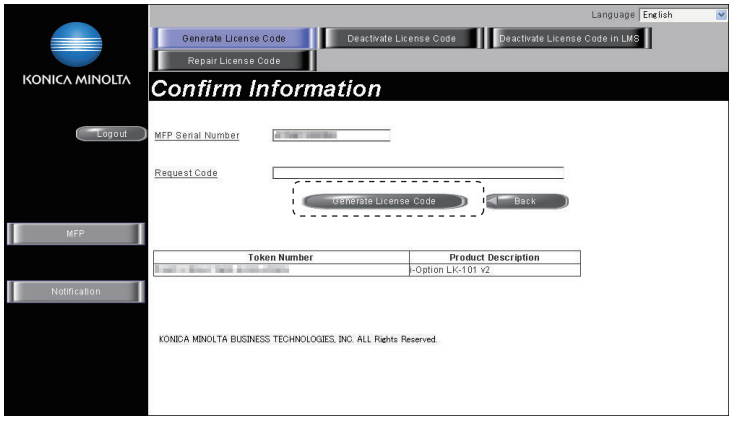


12. LMS issues license code and function code.
13. Write down the serial number, license code and function code.
    <When activating with an USB memory>
    Click [Download], and save a "***.fek" file to the root directory of the USB memory.

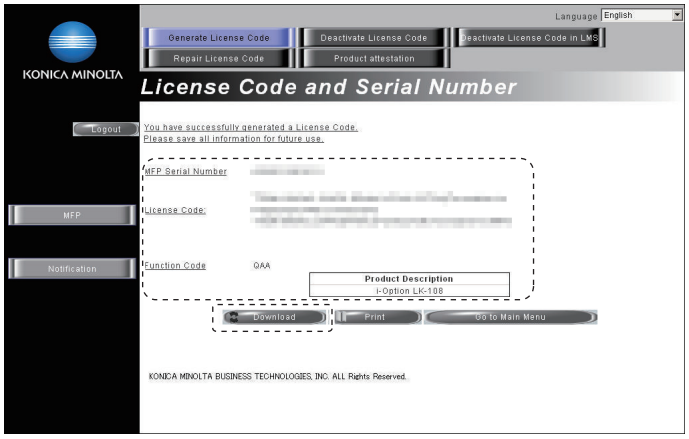


14. Select [Service Mode] -> [Billing Setting] -> [License Management].

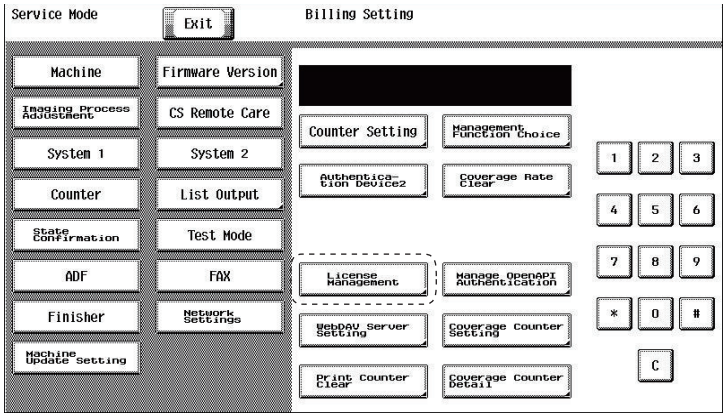


15. Select [Activation] -> [Function Code] or [License Code], and enter the function code and the license code confirmed at Step13.
    <When activating with an USB memory>
    Connect the USB memory to the USB port on the side of the control panel, and select [Activation] -> [USB].
16. Touch [Apply].

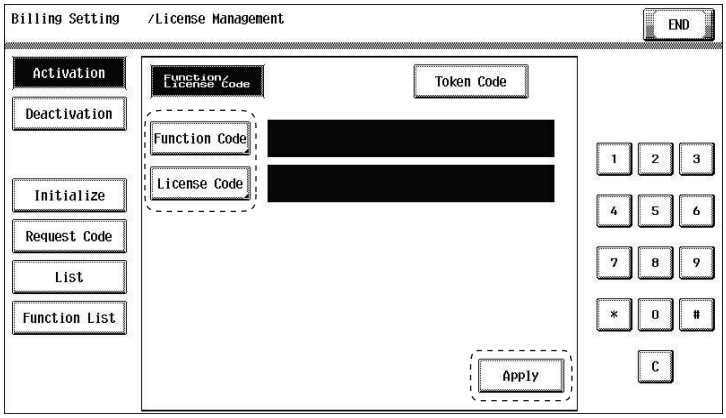


17. Follow the massage appearing on the screen and turn OFF and ON the main power switch.
<When activating with an USB memory>
This step is unnecessary. Proceed to the next step.
18. Select [Service Mode] -> [Billing Setting] -> [License Management] -> [Function List], and confirm that the activated function is displayed at the list.

### 8.3.11 License management - Deactivation

#### (1) Functions

- To deactivate i-Option functions.

#### (2) Use

- To deactivate i-Option functions due to registration error, expiration of lease term, change to other MFP or etc.
- The functions can be deactivated by selecting the desired function and enter the appropriate deactivation code.

#### (3) Procedure

**NOTE**

- **You need to access License Management System (LMS) to implement each function setting.**
- **Before accessing the LMS, CE are required to register the E-mail address and the password in the LMS. To register, click [CE Initial Registration] that is located in the upper right of CE Login screen.**

1. Check the serial number of the target MFP.
2. Access the following URL using the PC connected to the Internet.
https://lms.konicaminolta.com/license/KM/support.aspx
3. Click [CE Login].

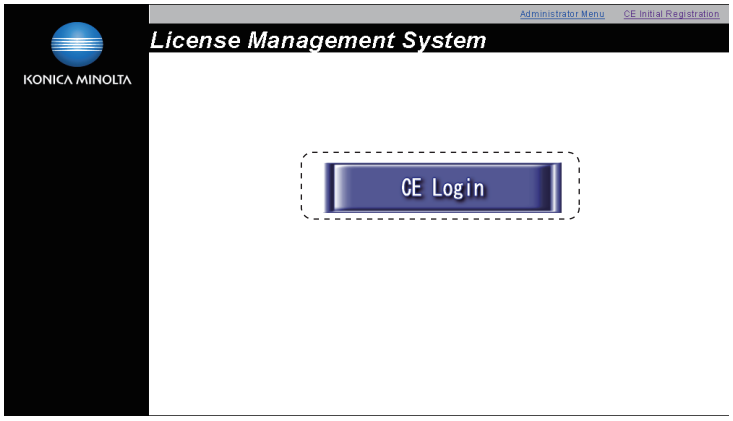


4. Enter [E-Mail Address] and [Password], and click [Login].

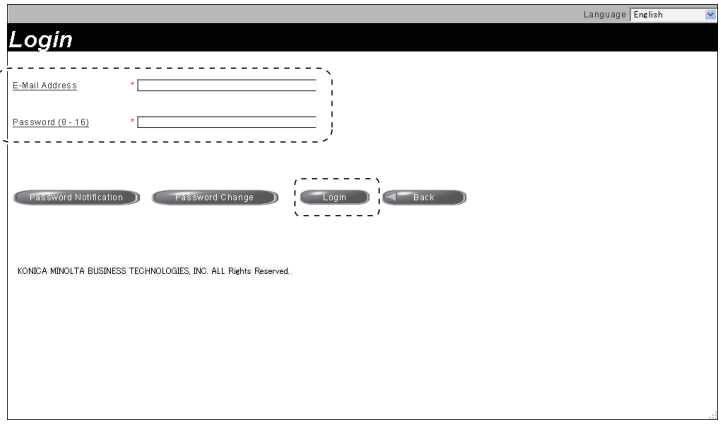


5. Click [Deactivate License Code].

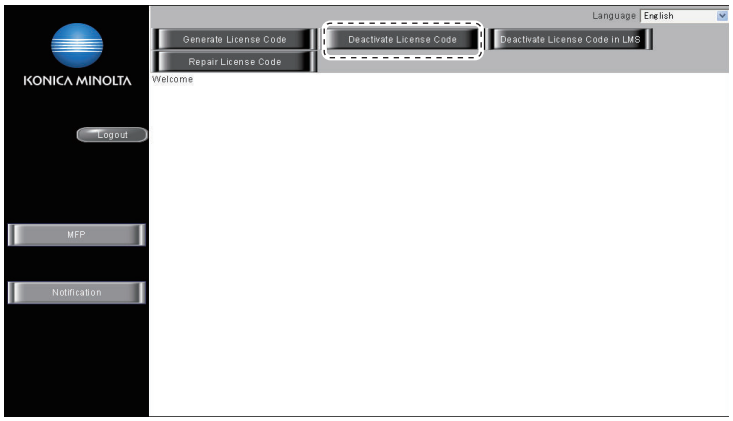


6. Enter the serial number of the target MFP, and click [Retrieve].
**NOTE**
- **Make sure to enter alphabet letters of the serial number in all capital letters.**

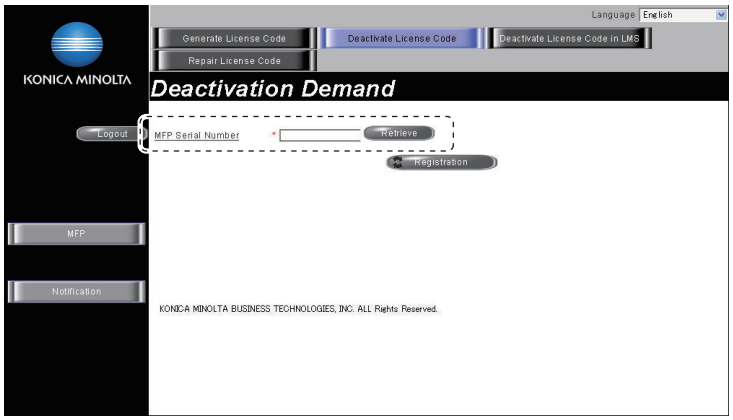


7. Select the token to be deactivated, and click [Registration].

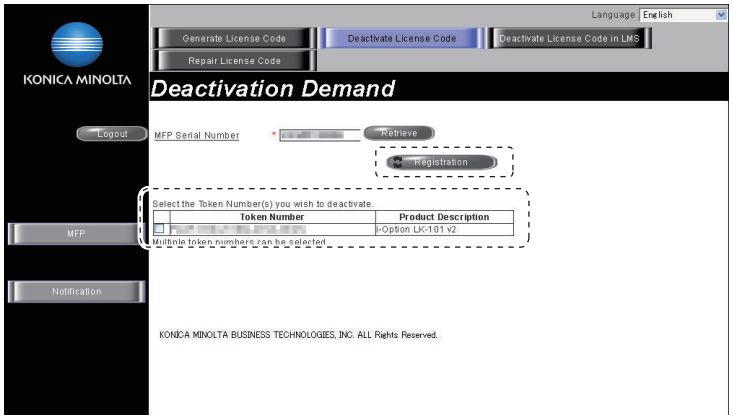


8. LMS issues deactivation code and function code.
9. Write down the serial number, deactivation code and function code.
   <When deactivating with an USB memory>
   Click [Download], and save a "***.fek" file to the root directory of the USB memory.

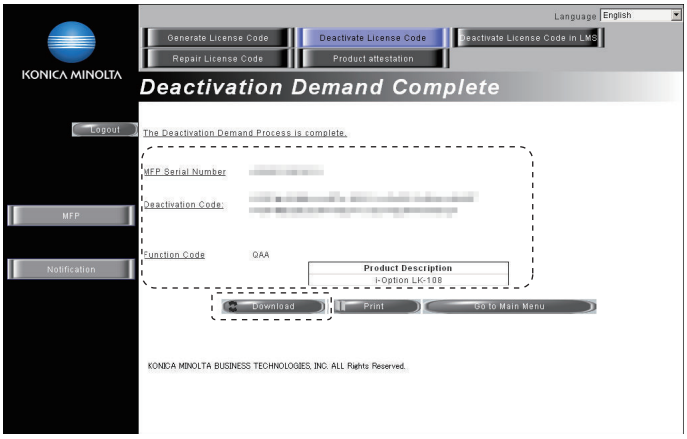


10. Select [Service Mode] -> [Billing Setting] -> [License Management].

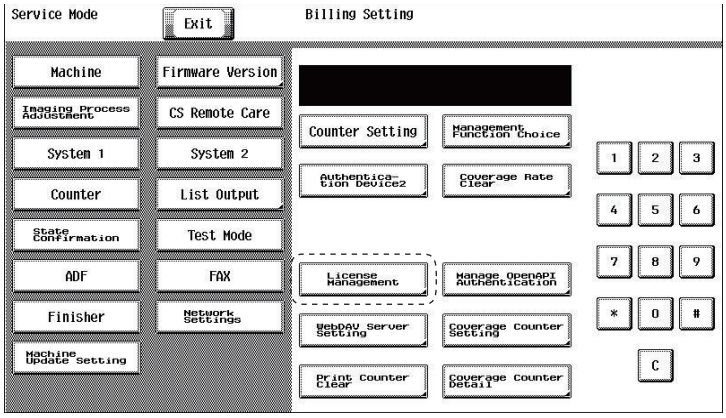


11. Select [Deactivation] -> [Function Code] or [Deactivation Code], and enter the function code and the deactivation code confirmed at Step9.
    <When deactivating with an USB memory>
    Connect the USB memory to the USB port on the side of the control panel, and select [Deactivation] -> [USB].
12. Touch [Apply].

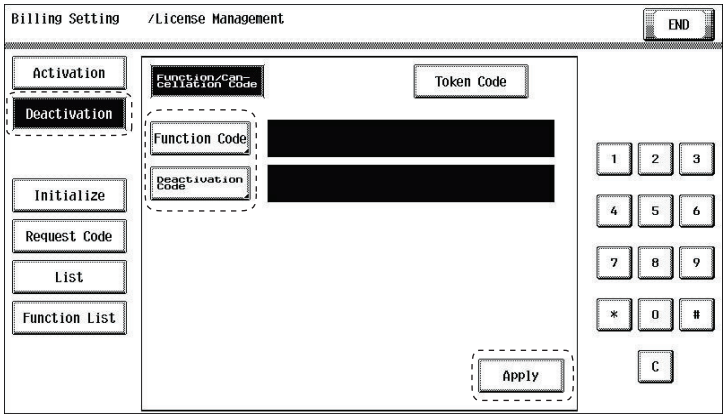


*13.* Write down or print out the serial number and deactivation complete code.
<When deactivating with an USB memory>
MFP will restart automatically. After MFP restarts, write down or print out the serial number and deactivation complete code.
**NOTE**
- **When A4S or 8 1/2 x 11S is set to the paper feed tray, the above-mentioned serial number and deactivation complete code can be printed out by pressing the start key.**
- **Serial number and deactivation complete code can be confirmed in [List] available from [License Management].**

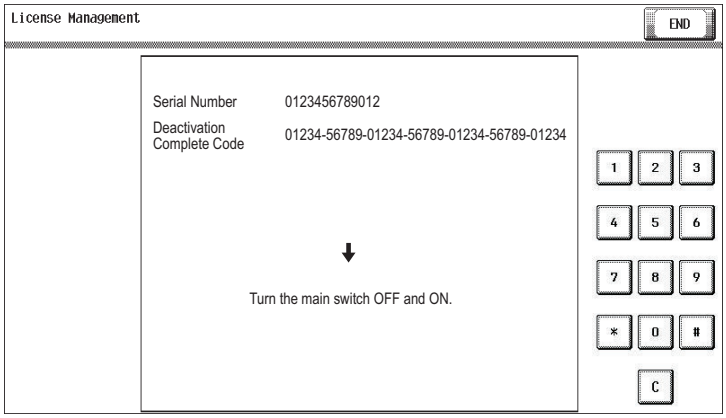


*14.* Follow the massage appearing on the screen and turn OFF and ON the main power switch.
<When deactivating with an USB memory>
This step is unnecessary. Proceed to the next step.
*15.* Access to the LMS and login again.
For detail of the login method, refer to step 2 to step 4.
*16.* Click [Deactivate License Code in LMS].
*17.* Enter the serial number and the deactivation complete code confirmed at step13.
**NOTE**
- **Make sure to enter alphabet letters of the serial number in all capital letters.**

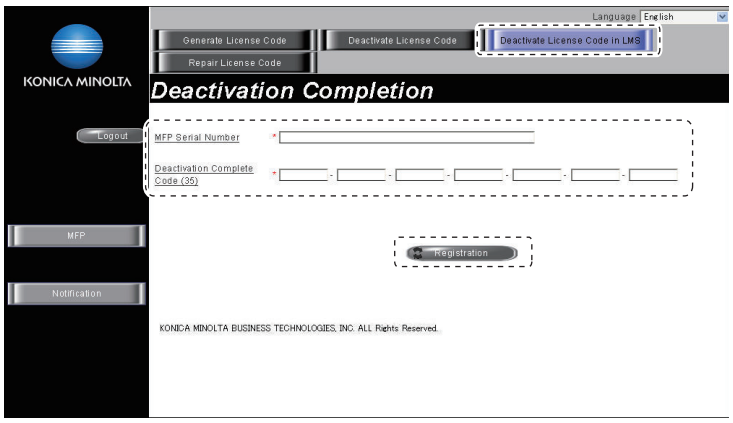


*18.* "Deactivation Complete" message will be displayed.
The license become invalid at both MFP and LMS, and deactivated token number can be used for another MFP.

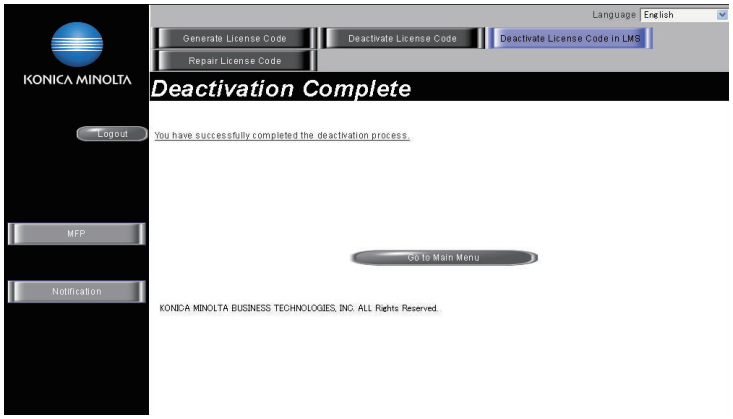


### 8.3.12 License management - Repair

#### (1) Functions

- To repair license management information.

#### (2) Use

- To be used when license management information is lost due to replacement of MFP board or the eMMC board, or some other trouble.
- License management information can be repaired by acquiring repair code with repair request code, and entering the repair code.

#### (3) Procedure

**NOTE**

- **You need to access License Management System (LMS) to implement each function setting.**
- **Before accessing the LMS, CE are required to register the E-mail address and the password in the LMS. To register, click [CE Initial Registration] that is located in the upper right of CE Login screen.**
- When the message “License management error occurred.” is displayed, carry out the repair operation with the following steps.

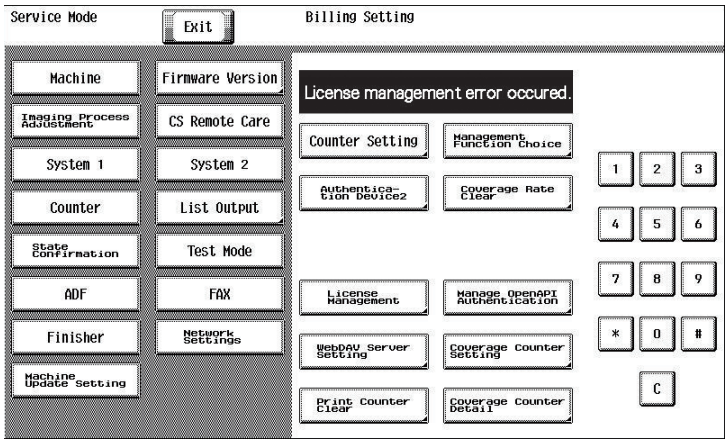


1. Select [Service Mode] -> [Billing Setting] -> [License Management].

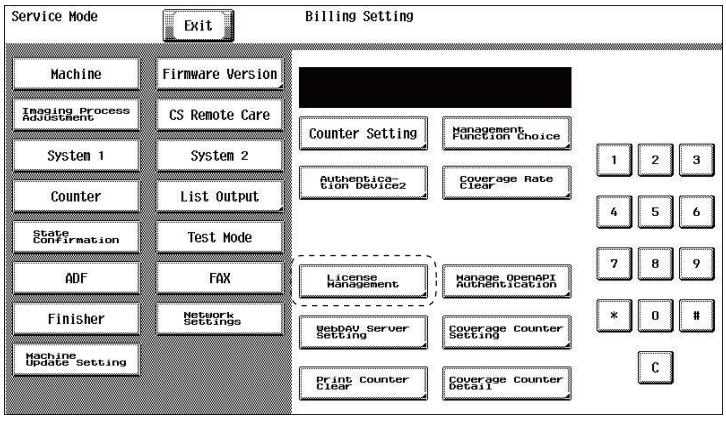


2. Select [Repair] -> [Repair Request Code].

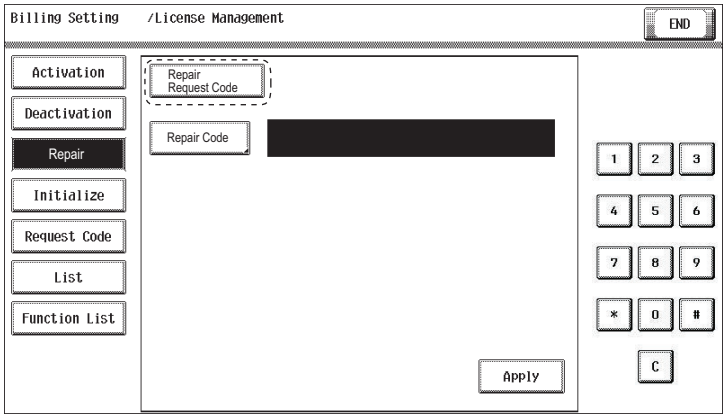


3. Write down or print out the serial number, repair request code and request code.
**NOTE**
- **When A4S or 8 1/2 x 11S is set to the paper feed tray, the above-mentioned serial number and repair request code can be printed out by pressing the start key.**

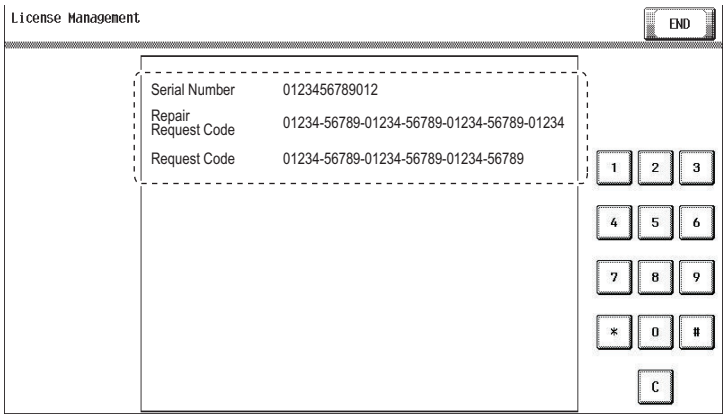


4. Access the following URL using the PC connected to the Internet.
https://lms.konicaminolta.com/license/KM/support.aspx
5. Click [CE Login].

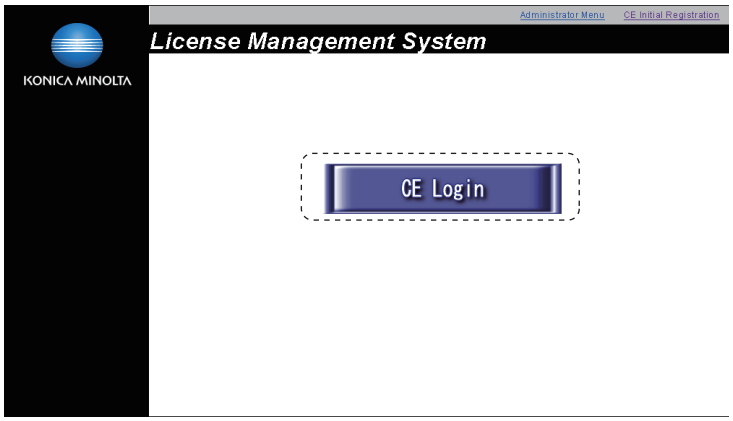


6. Enter [E-Mail Address] and [Password], and click [Login].

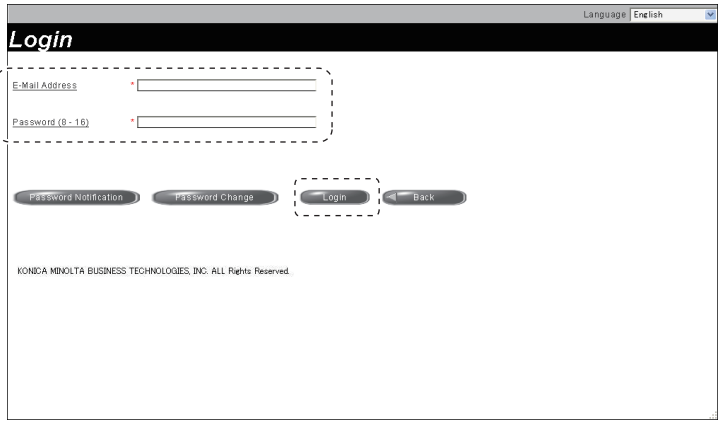


7. Click [Repair License Code].
8. Enter the serial number, repair request code and request code confirmed at step3, and click [Registration].
   **NOTE**
   - **Make sure to enter alphabet letters of the serial number in all capital letters.**

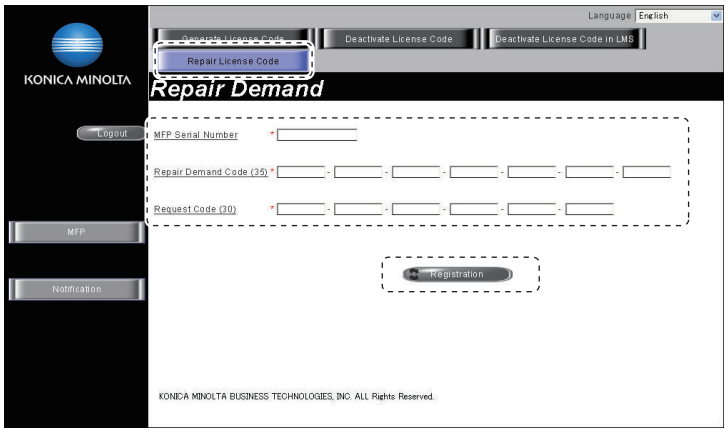


9. LMS issues repair permission code.
10. Write down the serial number and repair permission code.

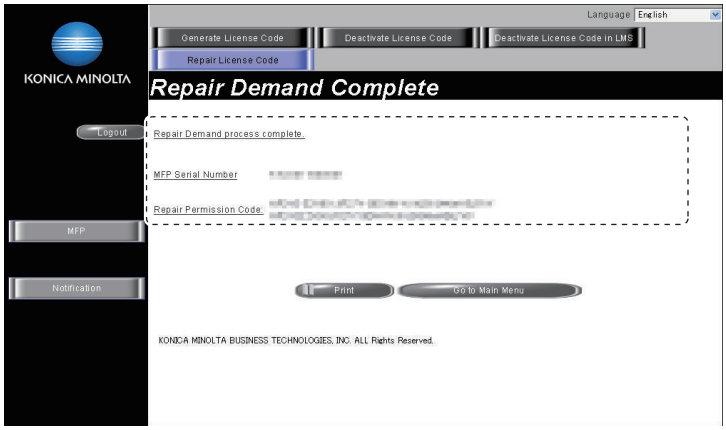


11. Select [Service Mode] -> [Billing Setting] -> [License Management].

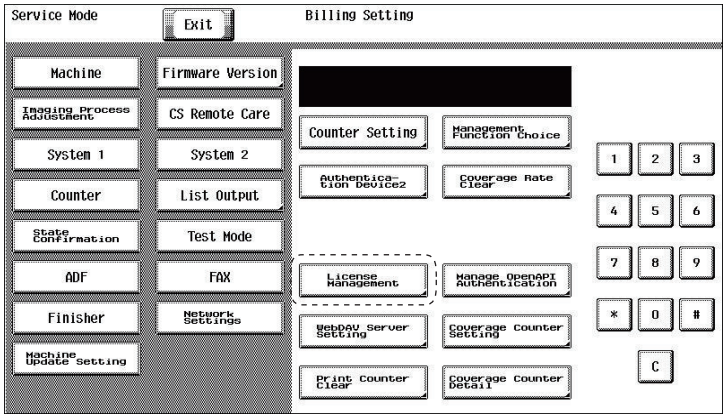


*12.* Select [Repair] -> [Repair Code], and enter the repair code confirmed at step10.

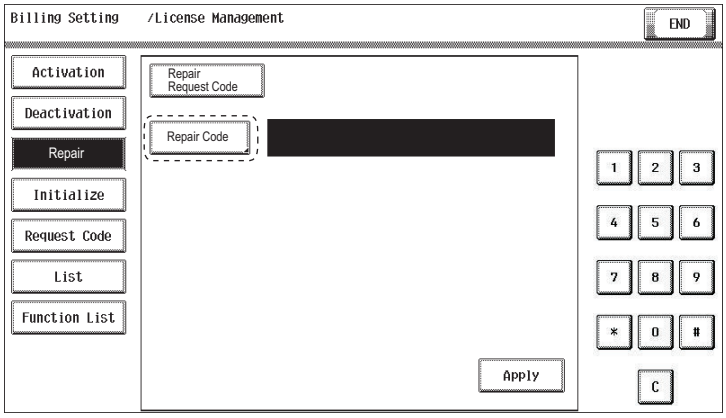


*13.* Touch [Apply].

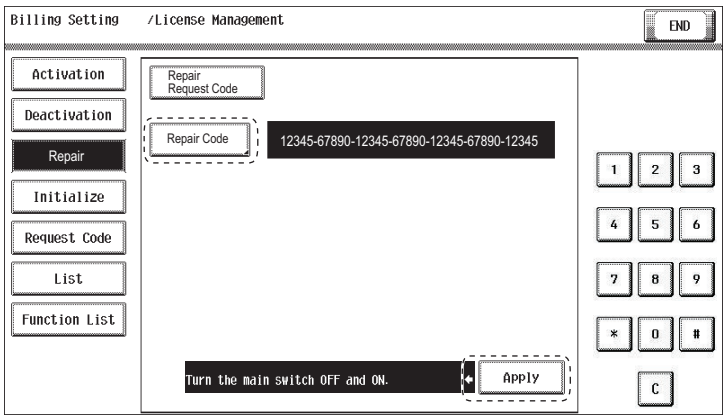


*14.* Follow the massage appearing on the screen and turn OFF and ON the main power switch.

### 8.3.13 License management - Initialize

#### (1) Functions

- To initialize license management information.

#### (2) Use

- To be used when license management information cannot be repaired.
- License management information should be initialized when the machine fails to generate request code or repair request code due to any trouble and the information cannot be repaired.

#### (3) Procedure

**NOTE**

- **You need to access License Management System (LMS) to implement each function setting.**
- When license management information cannot be repaired, initialize the information with the following procedure.

*1.* Contact the license management section of sales company to report the information necessary to issue the initialize code.
*2.* The license management section of sales company supplies the initialize code.

3. Call the Billing Setting to the screen.
4. Touch [License Management] -> [Initialize].
5. Enter the initialize code issued by call center using the keyboard on the screen, and touch [Apply].

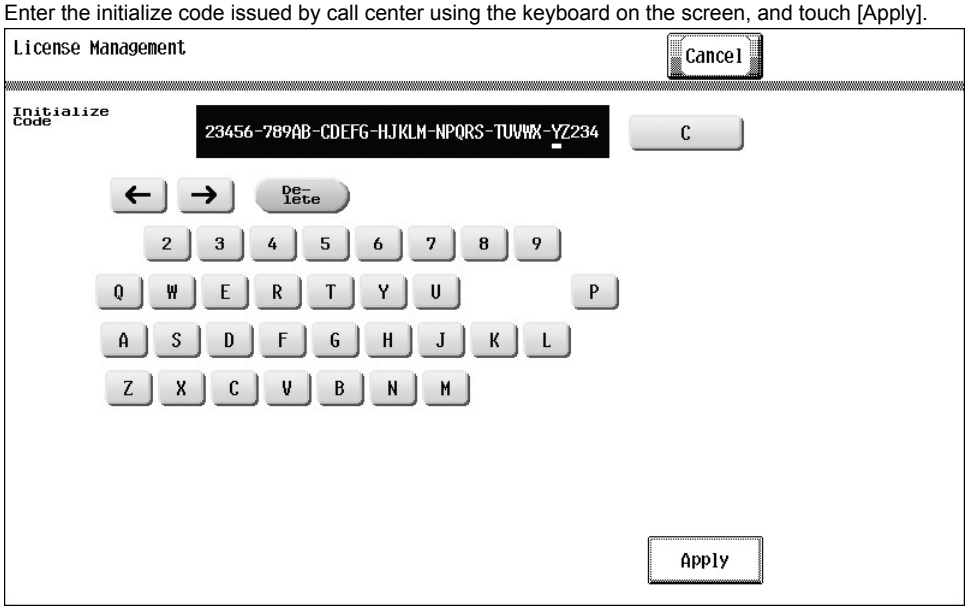


6. After completing the initialization, follow the message appearing on the screen and turn OFF and ON the main power switch.

### 8.3.14 License management - Request Code

- When the license management error is occurred, it will not be displayed until the repair code is input.

#### (1) Functions

- To display and print request code and serial number.

#### (2) Use

- To check the request code and serial number.

#### (3) Procedure

- Set A4S or 8 1/2 x 11S paper to the tray, and press start key at request code screen to print.

### 8.3.15 License management - List

#### (1) Functions

- To display and print deactivation complete code and serial number.

#### (2) Use

- To display and print deactivation complete code and serial number.

#### (3) Procedure

- Set A4S or 8 1/2 x 11S paper to the tray, and press start key at deactivation complete code screen to print.

### 8.3.16 License management - Function List

#### (1) Functions

- To display currently activated functions.

#### (2) Use

- To display activated functions.

### 8.3.17 Manage OpenAPI Authentication

#### (1) Restriction Code

##### (a) Use

- These are communication settings for the application which is developed by the third vendor. Do not set or change these settings without vendor's instructions.

#### (2) Region Code

##### (a) Use

- These are communication settings for the application which is developed by the third vendor. Do not set or change these settings without vendor's instructions.

### 8.3.18 WebDAV Server Setting

#### (1) Select Address

##### (a) Use

- To select the address of the LMS server used to manage the license of i-Option.
- Used to change the LMS server address set at the time of shipment.

| | |
|---|---|
| Fixed Address | Uses the LMS server address set at the time of shipment. The specified address cannot be changed. |
| Specify Address | Specifies a desired LMS server address. When selecting [Specify Address], [Server Setting] is displayed. |

##### (b) Default setting

- Fixed Address

##### (c) Setting item

- Fixed Address
- Specify Address

#### (2) Server Setting

##### (a) Use

- To configure the settings on the WebDAV server that communicates with MFP when selecting [Specify Address] in [Select Address].

##### (b) Procedure

1. Host Name: Set the host name of the WebDAV server. (Up to 253 one-byte alphameric characters and symbols)
2. File Path: Set the file path used in the WebDAV server communication. (Up to 47 one-byte alphameric characters and symbols)
3. User name: Set the user name used to access the WebDAV server. (Up to 64 one-byte alphameric characters and symbols)
4. Password: Set the password that is used to access the WebDAV server. (Up to 64 one-byte alphameric characters and symbols)
5. Port Number: Set the port number that is used to access the WebDAV server. (Default: 80)

#### (3) Polling

##### (a) Use

- To set the number of times and interval at which MFP polls the WebDAV server.

##### (b) Procedure

1. Polling Count: Set the number of times that MFP polls the WebDAV server. (Default: 30 times.)
2. Polling Interval: Set the interval at which MFP polls the WebDAV server. (Default: 20 seconds.)

**NOTE**

- **When MFP accesses to WebDAV server via proxy server, set the proxy setting in [Administrator Settings] -> [Network Settings] -> [WebDAV Settings] -> [Proxy Setting for Remote Access].**

### 8.3.19 Coverage Counter Setting

- It will be displayed when [Service Mode] -> [System 2] -> [Software Switch Setting] shows that switch No.206 is set to [00000001] at Bit assignment/[01] at HEX assignment.

#### (1) Use

- To set the counting method according to the print paper size, the total coverage rate of each color, and the count-up coefficient.

  **NOTE**

  - **The coverage rate refers to a ratio of the print area of each color relative to the print paper size.**

- The coverage rate and the coefficient can be set for each of the print modes and paper sizes listed in the following table.

| Print mode | Paper size | Description |
|---|---|---|
| Color/Black | Small Size | Set the counting method for data printed on paper having a size smaller than A4/Letter. |
| | A4 | Set the counting method for data printed on paper having a size of A4/Letter. |
| | Large Size | Set the counting method for data printed on paper having a size larger than A4/Letter and equal to or smaller than A3. |
| | Banner | Set the counting method for data printed on paper having a size larger than A3. |

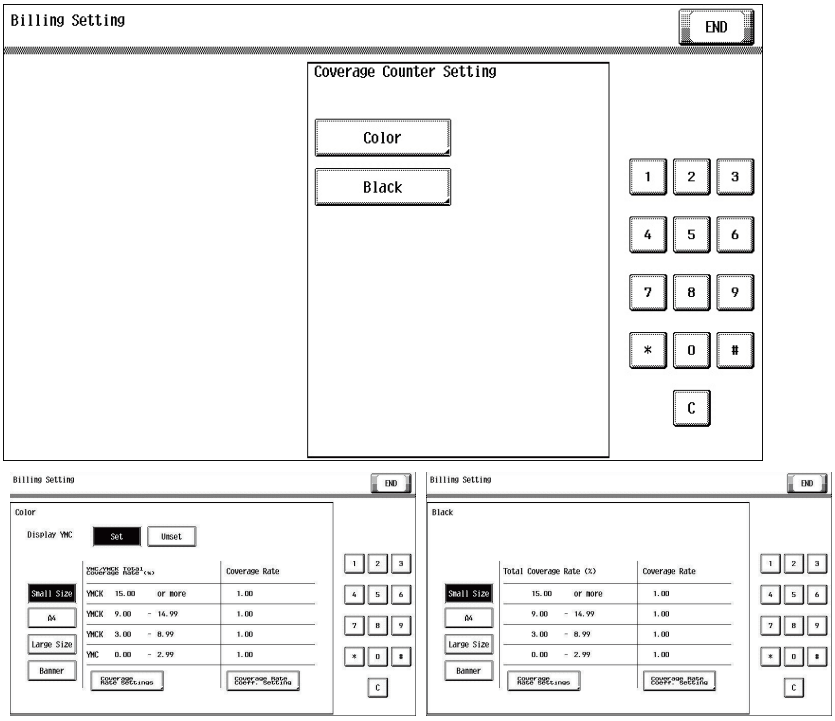


### (2) Display YMC

- Set whether to use the total coverage rates of YMC, but K (black), in color printing as a basis for calculating the coverage counter.
- “Set” is the default setting.
- When “Set” is set, counting is performed regardless of the coverage rate of K as long as the coverage rate of YMC falls within the YMC total coverage rate.

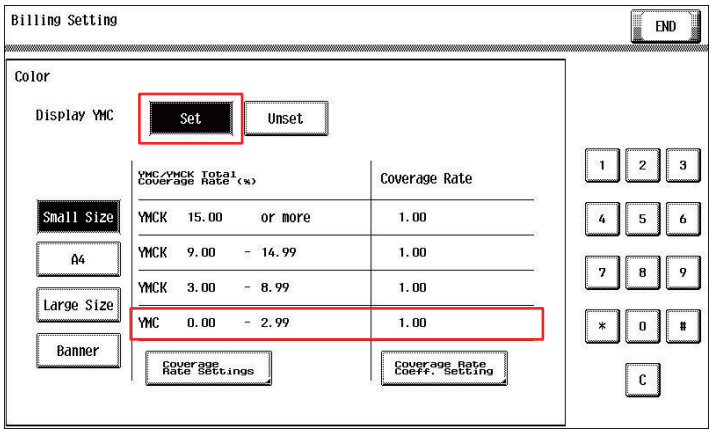


- If “Unset” is set, the area to be counted is determined based on the total coverage rate of YMCK.

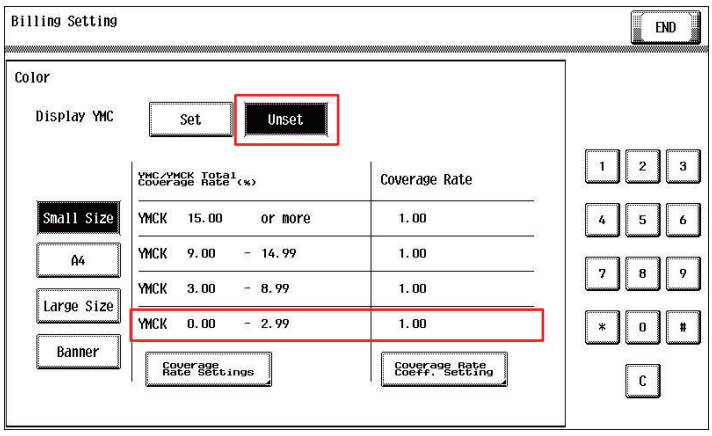

### (3) Setting item (Coverage Rate Settings)

- Make settings relating to the YMC/YMCK total coverage rate.

| Setting item | Description |
|---|---|
| Number of Range Settings | Set the number of ranges used for setting the YMC/YMCK total coverage rate.<br>Default number of ranges: 4<br>Setting range: 1 to 4 |
| YMC/YMCK Total Coverage Rate Setting | Set the threshold values of each of the sets of the total coverage rate.<br>Default value: “Set 4” - 15.00 or more<br>“Set 3” - 9.00 to 14.99<br>“Set 2” - 3.00 to 8.99<br>“Set 1” - 0.00 to 2.99<br>Setting range: 0.02 to 250.00<br>The setting values should satisfy the following relation:<br>0.02 ≦ setting values of set 2 < setting values of set 3 < setting values of set 4 ≦ 250.00 |

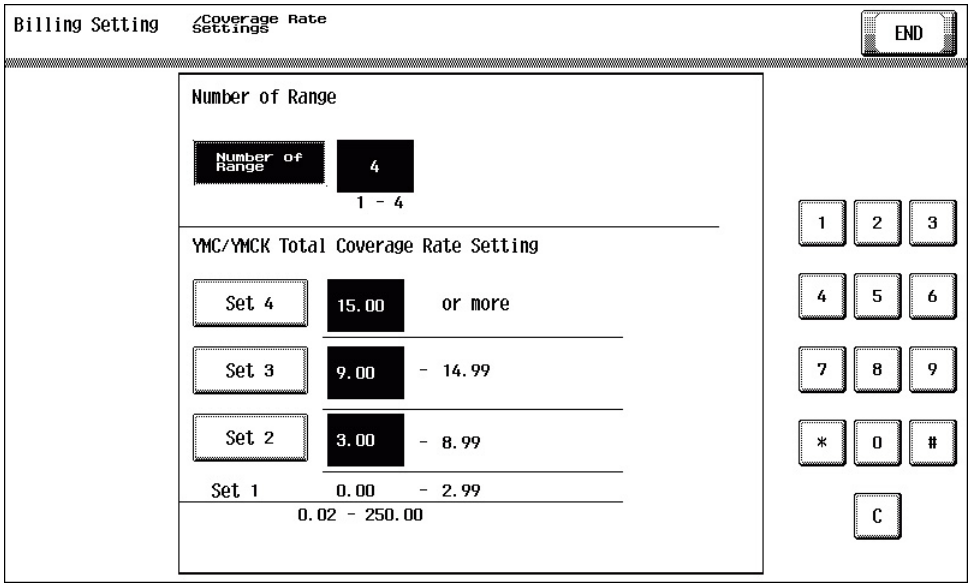


### (4) Procedure (Coverage Rate Settings)

1. Touch the [Coverage Counter Setting].
2. Select the [Color] or [Black].
3. When [Color] is selected, select [Set] or [Unset] for YMC display.
4. Select the paper size.
5. Touch the [Coverage Rate Settings].
6. Enter [Number of Range] from the 10-key pad.
7. When [Number of Range] is entered, the corresponding number of sets are displayed.
8. Select a [Set] and enter the threshold values of the coverage to be set from the 10-key pad.
9. After the values are entered, touch [END].

### (5) Setting item (Coverage Rate Settings)

- Set the coverage rate coefficient relative to the set made in Coverage Rate Settings.

| Setting item | Description |
|---|---|
| Coverage Rate Coeff. Settings | Set the coefficient relative to the set total coverage rate set.<br>Default value: 1.00<br>Setting range: 0.01 to 4.00 |

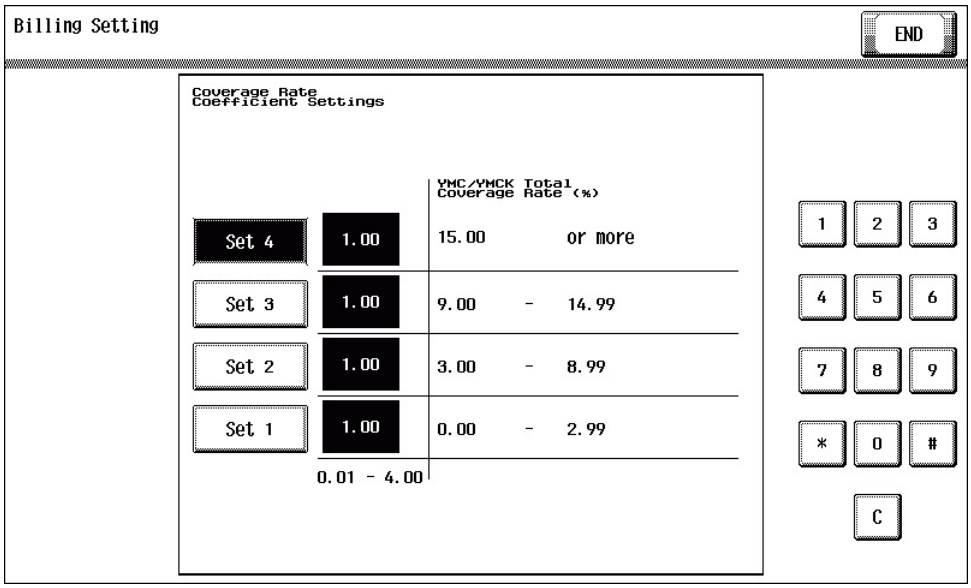


### (6) Procedure (Coverage Rate Coeff. Settings)

1. Select the paper size.
2. Touch the [Coverage Rate Procedure Coeff. Settings].
3. Touch the [Set] set by [Coverage Rate Settings] and enter the coefficient from the 10-key pad.
4. After the coefficient has been entered, touch [END].

## 8.3.20 Print Counter Clear

- It will be displayed when [Service Mode] -> [System 2] -> [Software Switch Setting] shows that switch No.206 is set to [00000001] at Bit assignment/[01] at HEX assignment.

### (1) Use

- To clear Print Counter and Subtotal values of Coverage Counter Detail.
- Clear Subtotal value in [Meter Count] -> [Coverage Counter].

### (2) Procedure

- Select “Set” and touch [END].

### (3) Default setting

- Unset

### (4) Setting item

- Set
- Unset

## 8.3.21 Coverage Counter Detail

- It will be displayed when [Service Mode] -> [System 2] -> [Software Switch Setting] shows that switch No.206 is set to [00000001] at Bit assignment/[01] at HEX assignment.

### (1) Use

- To display details of the coverage counter value calculated according to Coverage Counter Setting.

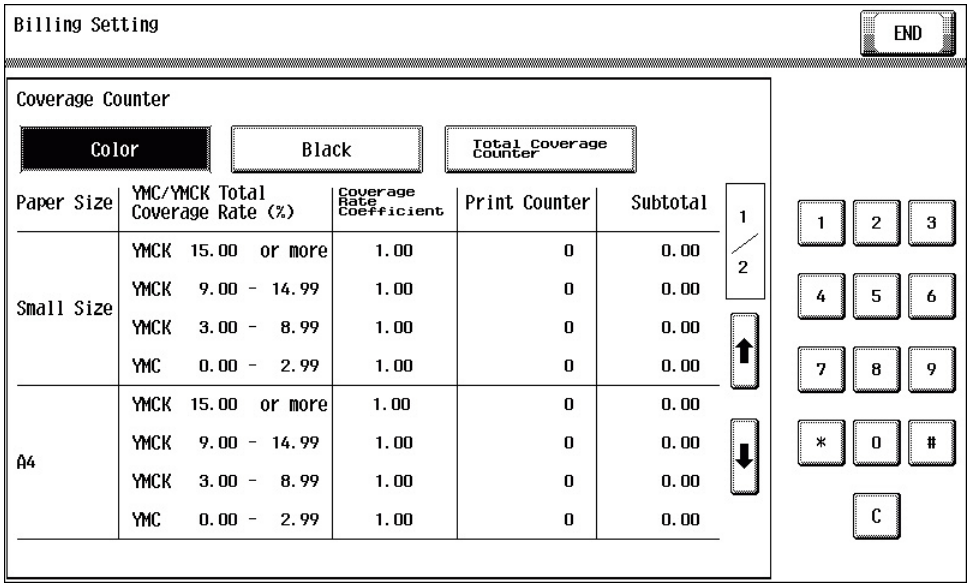


| Indication | Description |
|---|---|
| Color/Black | Displays the count values of color and monochrome printing. |
| Total Coverage Counter | Displays the count values of color, monochrome, and total.<br>Displays the cumulative value of the coverage counter since the installation of the machine. |
| YMC/YMCK Total Coverage Rate (%) *1 | Displays the set of the total coverage rate that serves as a basis for counting. |
| Coverage Rate Coefficient *1 | Displays the coverage rate coefficient set for each set that serves as the basis for countering. |
| Print Counter | Displays the count value of the number of printed pages on which the print paper size and the total coverage rates of each color satisfy the counting base. |
| Subtotal | Displays the counter value obtained through the following calculation involving the print counter and the coverage rate coefficient:<br>Subtotal = print counter × coverage rate coefficient |

- *1: What is displayed complies with the setting made in [Service Mode] -> [Billing Setting] -> [Coverage Counter Setting] .

**NOTE**

- **The total coverage counter has been activated upon the installation of the machine regardless of whether it is displayed on the screen. Thus, the counter default value during screen display setting is not necessarily “0”.**
- **The total coverage counter value is the cumulative value since the installation of the machine, while the print counter value is the cumulative value since the last performance of print counter clear. Thus, the sum of the subtotal values does not necessarily coincide with the total coverage counter value.**

# 9. Debug Settings

- To configure the settings on log information acquisition performed to analyze the MFP controller's internal operation.

## 9.1 List of debug settings

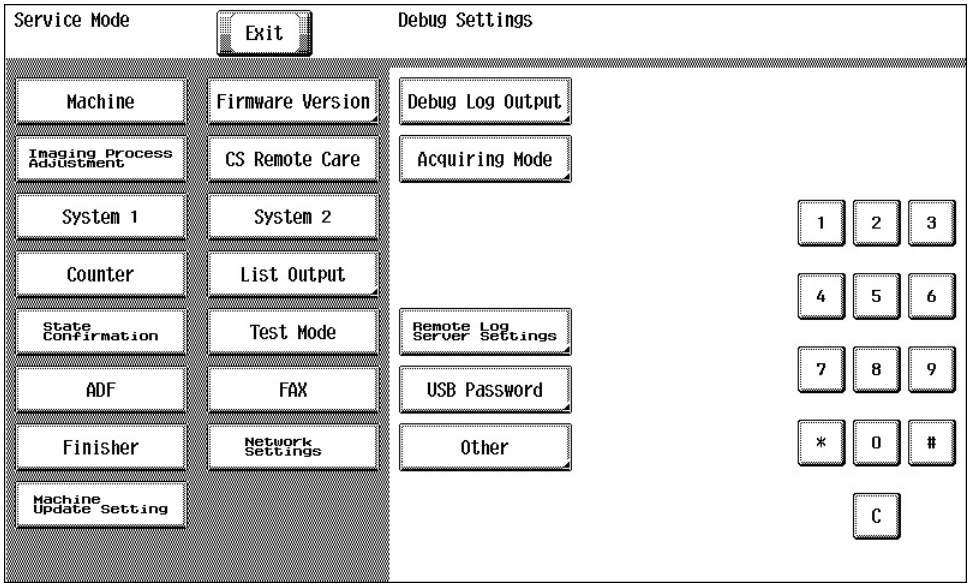


| Debug Settings | | Ref. page |
|---|---|---|
| Debug Log Output | | I.9.3.1 Debug Log Output |
| Acquiring Mode | | I.9.3.2 Acquiring Mode |
| TX Debug Log Settings | | I.9.3.3 TX Debug Log Settings |
| Remote Log Retrival* | Remote Log settings | I.9.3.4.(1) Remote Log settings |
| | Time Setting | I.9.3.4.(2) Time Setting |
| | Polling | I.9.3.4.(3) Polling |
| | Retrieve Log Information | I.9.3.4.(4) Retrieve Log Information |
| Remote Log Server Settings | | I.9.3.5 Remote Log Server Settings |
| USB Password | | I.9.3.6 USB Password |
| Other | | I.9.3.7 Other |

- This is displayed only when [Administrator Settings] -> [Security Settings] -> [Security Details] -> [Export Debug Log] is set to “Allow.”

## 9.2 Starting/Exiting

### 9.2.1 Starting procedure

**NOTE**

- **Before the procedure, set the switch No. 155 to [00000001] at Bit assignment/[01] at HEX assignment in [Service Mode] -> [System 2] -> [Software Switch Setting].**

1. Call the Service Mode to the screen.
2. Press the following keys in this order.
   - Stop -> 6 -> 1 -> 8
3. Select a mode.

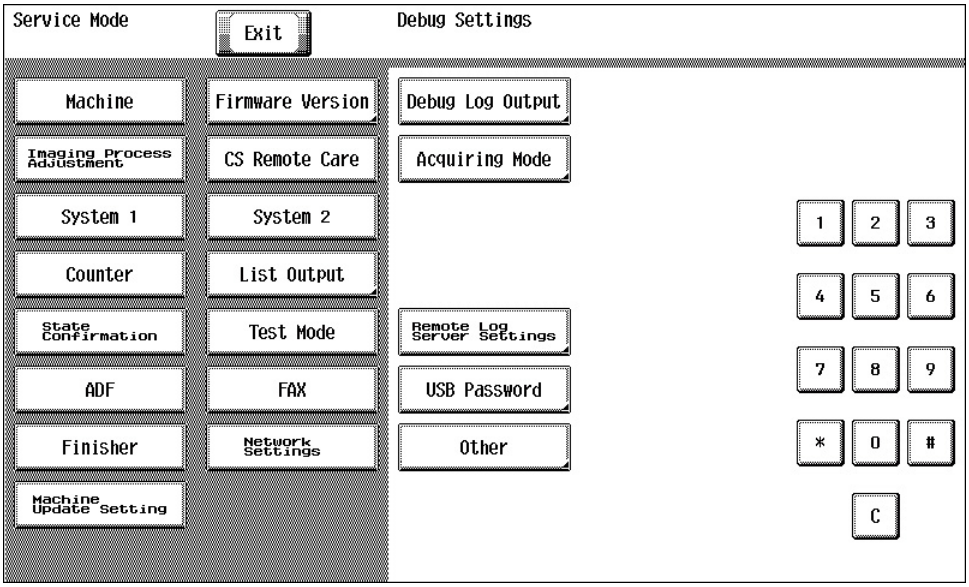


### 9.2.2 Exiting procedure

1. Touch [Exit] on the Service Mode screen.
2. Turn OFF the main power switch. Wait 10 seconds, then turn ON the main power switch again.

## 9.3 DEBUG SETTINGS

### 9.3.1 Debug Log Output

#### (1) Use

- To select debug log data to be output and save it in a USB memory.

| | |
|---|---|
| All | Outputs available all logs. |
| Select File | Specifies a desired file and outputs it.<br>Capable of narrowing file types from [Normal], [Trouble], or [Print Data]. |
| Select Time | Specifies a desired period and outputs corresponding data. |
| Shared Memory -> HDD | • Manually stores debug information written in the memory into the HDD.<br>• After selecting [Save], saving is started by pressing the Start key. |
| HDD -> USB Memory | • Outputs debug information stored in the HDD into a USB flash drive.<br>• After selecting [Output], saving is started by pressing the Start key. |

- Logs obtained under normal operation and logs obtained upon occurrence of trouble are separated and stored in different areas. Up to 20 logs can be stored.
  - Logs obtained under normal operation: 10 logs
  - Logs obtained upon occurrence of trouble: 10 logs
- When the number of saved logs reaches the upper limit, files are overwritten starting from the oldest file.

#### (2) Setting item

- All
- Select File
- Select Time
- Shared Memory -> HDD
- HDD -> USB Memory

**NOTE**

- **If a USB memory is not connected to the USB port of MFP or [Administrator Settings] -> [Security Settings] -> [Security Details] -> [Export Debug Log] is set to [Restrict], output is unavailable.**

### 9.3.2 Acquiring Mode

#### (1) Use

- To select mode used to acquire debug logs.
- If the cause of a problem cannot be identified by the debug logs acquired in basic mode, obtain more detailed debug logs in Enhance mode and analyze them.

| | |
|---|---|
| Basic | Normal mode<br>Stores debug information saved in the memory into the HDD. |
| Enhance | Mode that enables you to obtain more detailed debug information than Basic mode.<br>When a large amount of detailed information must be output, the CPU or other devices is heavily loaded and the performance of MFP is affected. |

#### (2) Default setting

- Basic

#### (3) Setting item

- Basic
- Enhance

#### (4) Enhance mode

- When "Enhance" is selected, configure the following items.

##### (a) Network Packet

- If network packet information is necessary, select "ON."

##### (b) Acquisition function

- Select the functions to be covered when obtaining debug logs.
  Select All, Copy, Printer, Box, Net/Scan, PSWC, FAX, Net Fax, and Authentication
- This item will not be displayed when [Network Packet] is set to ”ON.”

##### (c) Network Packet Capture

- If [Network Packet] is set to "ON," configure [Capture Filter Settings] and [Capture Settings].
- This item will not be displayed when [Network Packet] is set to "OFF."

##### (d) By Job

- Set the number of jobs handled as a unit (the number of jobs by which debug information is acquired).

##### (e) Individual Command

- Register and execute individual debug commands.

##### (f) Command Set

- Install a command set and execute it.

#### (5) Timing of Saving Debug Information in Each Mode

##### (a) Basic mode

Debug information is stored in the HDD at the timings described below.

- When trouble occurs
- When there is no job
- During transition to energy save mode (sleep mode or low power mode)
- When authentication fails
- When [Debug Log Output] -> [Shared Memory -> HDD] is performed manually

##### (b) Enhance mode

- Save debug information to the USB memory or HDD as needed.

### 9.3.3 TX Debug Log Settings

- To configure settings used to send debug information via the network.
- To send the information via the network, SMB, FTP, or WebDAV transmission is selectable.
- This item will be displayed only when [Acquiring Mode] is set to “Basic.”

#### (1) Select TX Method

##### (a) Use

- To select a method used to send via the network.

##### (b) Default setting

- OFF

##### (c) Setting item

- OFF
- SMB
- FTP

#### (2) SMB Setting

##### (a) Use

- To configure settings used in SMB transmission.

##### (b) Procedure

1. Host Name: Set the host name for the SMB server.
2. File Path: Set the file path used for SMB server communication.
3. User Name: Set the user name used to access the SMB server.
4. Password: Set the password used to access the SMB server.

#### (3) FTP Settings

##### (a) Use

- To configure settings used in FTP transmission.

##### (b) Procedure

1. Host Name: Set the host name of the FTP server.
2. File Path: Set the file path used in the FTP server communication.
3. User Name: Set the user name used to access the FTP server.
4. Password: Set the password used to access the FTP server.
5. Port Number: Set the port number that is used to access the FTP server.
6. PASV: Set PASV mode to ON or OFF
7. Proxy: Set whether or not to connect to a proxy server.

#### (4) WebDAV Setting

##### (a) Use

- To configure settings used in WebDAV transmission.

##### (b) Procedure

1. Host Name: Set the host name of the WebDAV server.
2. File Path: Set the file path used in the WebDAV server communication.
3. User Name: Set the user name used to access the WebDAV server.
4. Password: Set the password that is used to access the WebDAV server.
5. Port Number: Set the port number that is used to access the WebDAV server.
6. Proxy: Set whether or not to connect to a proxy server.
7. SSL Settings: Select to use SSL communication.

### 9.3.4 Remote Log Retrival

#### (1) Remote Log settings

##### (a) Use

- Use the WebDAV server to retrieve remote access logs.
- Downloads the command set from the server configured from [Remote Log Server Settings] -> [Command Set Acquisition pt.] at the timing configured from [Time Setting] and [Polling].
- If the command set successfully downloads, logs and settings data is retrieved in accordance with the command set, and the log files and settings data files are saved on the server configured from [Remote Log Server Settings] -> [Log Save Destination].

##### (b) Default Setting

- ON

##### (c) Setting item

- ON
- OFF

#### (2) Time Setting

##### (a) Use

- Downloads the command set at the specified time and retrieves/saves the logs and settings data.

##### (b) Default Setting

- ON

##### (c) Setting item

- ON
- OFF

#### (3) Polling

##### (a) Use

- Downloads the command set at each specified time and retrieves/saves the logs and settings data.

##### (b) Default Setting

- ON

##### (c) Setting item

- ON
- OFF

#### (4) Retrieve Log Information

##### (a) Use

- Immediately downloads the command set and retrieves/saves the logs and settings data.

### 9.3.5 Remote Log Server Settings

#### (1) Command Set Acquisition pt.

##### (a) Use

- Configures the server from which command sets as used for [Remote Log Retrieval] are retrieved.
- Touch [Copy Setting] after settings parameters are selected to copy the settings to the destination as configured from [Log Save Destination].

#### (2) Log Save Destination

##### (a) Use

- Configures the server for storing files used for [Remote Log Retrieval].
- Touch [Copy Setting] after settings parameters are selected to copy the settings to the destination as configured from [Command Set Acquisition pt.].

### 9.3.6 USB Password

#### (1) Use

- To set a password used to store debug information into a USB flash drive.
- CE informs the KM contact person of this password and the debug information data separately.

**NOTE**

- **NEVER forget the USB password.**

#### (2) Default setting

- 01234567890123456789

#### (3) Procedure

- Enter an USB password from the keyboard on the screen.
  1. Current Password: Enter the USB password currently in use.
  2. New Password: Enter a new USB password.
  3. Re-input Password: Re-enter the new USB password.

### 9.3.7 Other

#### (1) Screen Capture

- The screen displayed on the control panel can be captured and saved in a USB memory as a file.

##### (a) Preparations

**NOTE**

- **Use a USB memory having no security functions.**

1. Touch [Other].
2. Touch [Screen Capture] and then [OK].

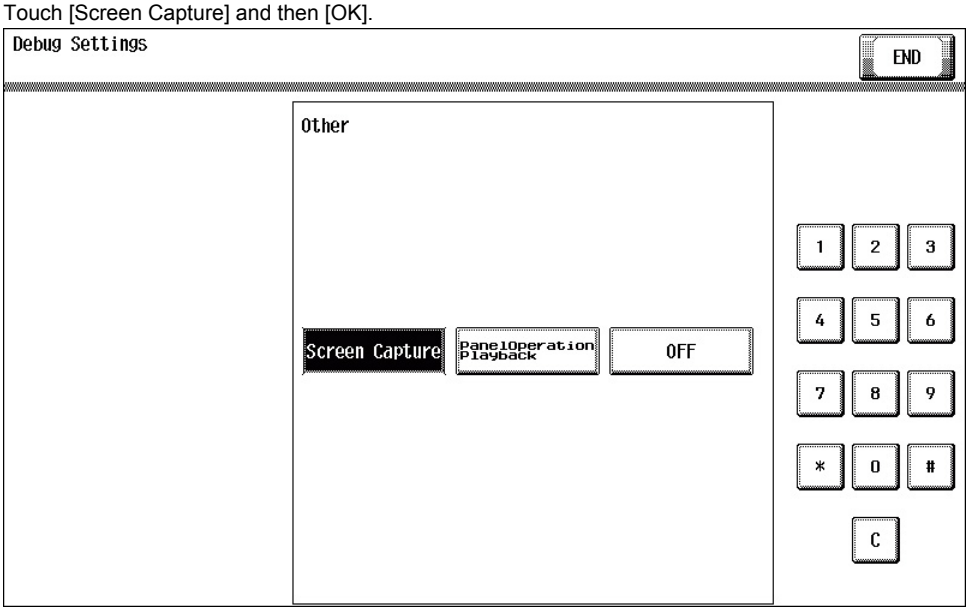


3. Insert the USB memory.

##### (b) Procedure

1. Call the screen to be captured to the control panel.
2. Touch [1] on the control panel. This saves the screen in memory.

A "Capture" folder is automatically created and a file in the PNG format is saved in the folder.

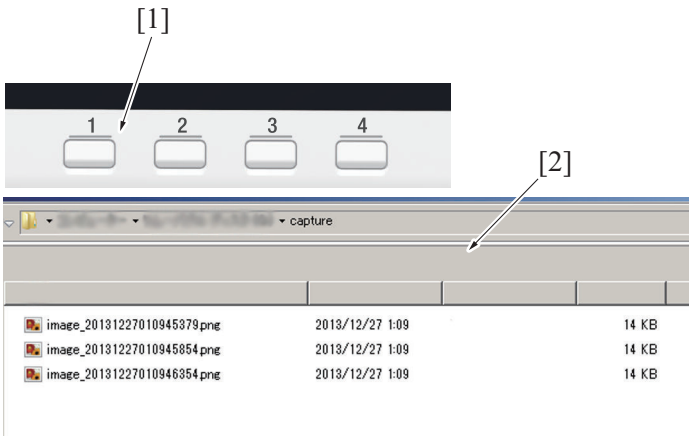


| | | | |
|---|---|---|---|
| [1] | [1] key | [2] | In USB memory |

### (c) Continuous capturing procedure

1. Call the screen to be captured to the control panel.
2. Touch [2] on the control panel.
3. Start the screen operations.
4. When the operations are completed, touch [10 keypad].
5. A "Capture" folder is automatically created and a file in the PNG format is saved in the folder.

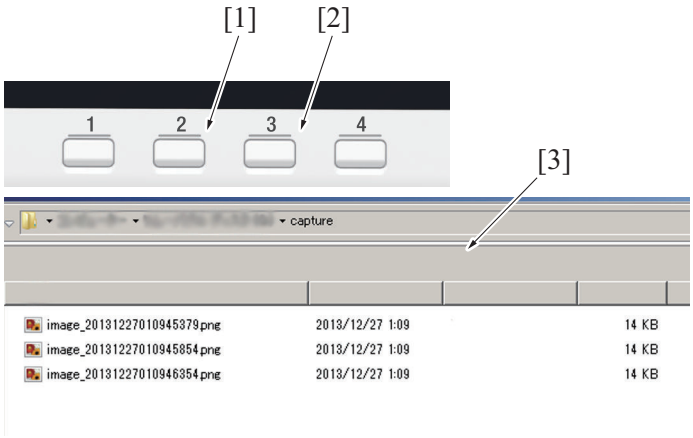


| | | | |
|---|---|---|---|
| [1] | [2] key | [2] | [10 keypad] key |
| [3] | In USB memory | - | - |

## (2) Panel Operation Playback

- A series of operations is stored in memory and automatically played back on the control panel.

**NOTE**

- **To perform the playback, be sure to go back to the first screen with which the capturing was started. A playback operation starting with any screen not stored in memory results in faulty playback.**

### (a) Preparations

1. Touch [Other].
2. Touch [Panel Operation Playback] and then [OK].

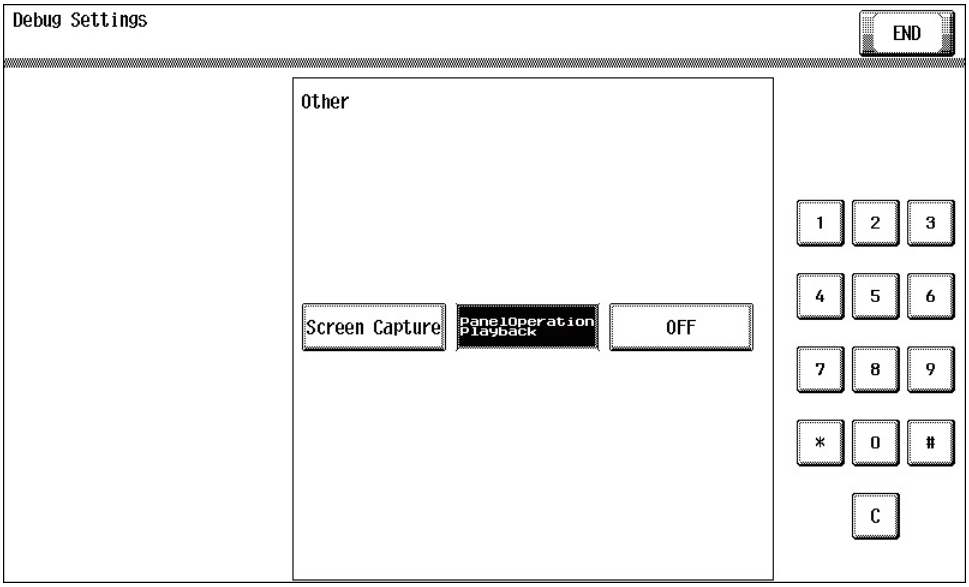


#### (b) Procedure

1. Call the auto playback starting screen to the control panel.
2. Touch [1].
3. Start the screen operations to store a series of screens.
4. When the operations are completed, touch [2].
5. Go back to the first screen and touch [10 keypad].

## 9.4 Operation of the debug log function

### 9.4.1 Basic mode

#### (1) Intended purpose

- To retrieve the program sequence logs from the MFP; for analyzing field problems caused by MFP controller program malfunction which could be difficult to reproduce in KM.

**NOTE**

- **CE should get permission from CUSTOMER before retrieving the program sequence logs from the customer's MFP.**
- **A Key generate utility is required for creation of a key file.**
- **For how to obtain or how to use the Key generate utility, please conduct the KM support department.**

#### (2) Outline

1. Save the key file in the USB memory by using the Key generate utility on the PC.
2. Set the Debug Settings to “ON” in the Service Mode.
3. Sets an encryption word.
4. Try to reproduce the problem/malfunction on the MFP.
5. The problem/malfunction is reproduced.
6. Set the debug log acquisition to "Allow" in Administrator Settings.
7. Select the debug log(s) that corresponds to the problem. Select "USB Memory" as the output destination and acquire the log(s).
8. Send the log(s) and the USB password to the department of KM from which you receive instructions.

**NOTE**

- **Up to a total of 20 log files can be saved, including ten during normal operations and another ten when errors occur.**
- **When the number of log files saved exceeds the upper limit, the log files are overwritten in chronological order.**
- **Each log file is concerned with a single job.**
- **Priority is given to job processing. A log file may not therefore be saved if jobs are performed continuously or if power is turned OFF immediately after processing of a job has been completed.**

#### (3) Details of the procedure

##### (a) Advance preparation

- Save a key file into a USB memory.
  1. Set the USB Password on the Key generation utility.
  2. Generate the Key file by typing in the Serial number (capital letter) of the target MFP.
  3. Copy the created "Debug Log" folder into the root directory of the USB memory.
- Make sure that [Administrator Settings] -> [Security Settings] -> [Enhanced Security Mode] is set to OFF.

##### (b) Settings for acquiring logs

1. Get permission from the CUSTOMER to retrieve the program sequence logs from the MFP at the customer's site.
   **NOTE**
   - **Logs include the MFP control program sequences only. They do not include the copy/scan/print/fax image data.**
2. Set the switch No.155 to [00000001] at Bit assignment/[01] at HEX assignment in [Service Mode] -> [System 2] -> [Software Switch Setting].
3. Call the Debug Settings in Service Mode.
4. Select [Basic] in [Debug Settings] -> [Acquiring Mode].

5. Ask the administrator of the MFP to set a debug log encryption pass phrase in [Administrator Settings] -> [Security Settings] -> [HDD Settings] -> [Debug Log Encryption Settings]. (Default: 01234567890123456789)
   **NOTE**
   - **This setting is used to encrypt debug logs to be stored in the HDD.**
   - **Be sure to set the encryption password. Failure to set the encryption password may hamper correct analysis of the log.**

6. Try to reproduce the problem/malfunction on the MFP.
7. The problem/malfunction is reproduced.
8. Ask the administrator of the MFP to set [Administrator Settings] -> [Security Settings] -> [Security Details] -> [Export Debug Log] to [Allow].
9. Call the Debug Settings in Service Mode.
10. Set the USB password in [Debug Settings] -> [USB Password].
    **NOTE**
    - **The USB password set here must be same as the password set in the USB memory in advance preparation procedure.**

11. Display [Debug Settings] -> [Debug Log Output] on the screen.
12. Connect the USB memory prepared in advance preparation to the USB port located on the right-side of the MFP control panel.
13. Touch [Select File]. Select the intended file and touch [Output] in [HDD -> USB Memory].
14. Check that the Start key lights up in blue, and press the Start key.
    **NOTE**
    - **If the Start key lights up orange, the USB password and/or MFP serial number on for the MFP do not match the key file.**

15. [OK] will be displayed.
16. Touch [OK], and exit the Debug Settings.
17. Return the switch No. 155 to [00000000] at Bit assignment/[00] at HEX assignment in [Service Mode] -> [System 2] -> [Software Switch Setting].
18. Exit the Service Mode.
19. Remove the USB memory from the MFP and check that the USB memory contains the file of which name is "LOGSYS_xxxxxxxxxx.log".
20. Send KM your request of analyzing the problem with the log file.
    **NOTE**
    - **Send the USB password and log file(s) to the recipient of your request SEPARATELY.**

### 9.4.2 Enhance mode

#### (1) Intended purpose

- To retrieve the program sequence logs from the MFP; for analyzing field problems caused by MFP controller program malfunction which could be difficult to reproduce in KM.

**NOTE**
- **CE should get permission from CUSTOMER before retrieving the program sequence logs from the customer's MFP.**
- **Please explain to the CUSTOMER that the MFP performance will be down during the procedure. The top priority of the MFP is to save the logs completely before starting the next job process; so the CUSTOMER will see a pause between jobs.**

#### (2) Outline

1. Save the key file in the USB memory by using the Key generate utility on the PC.
2. Set the Debug Settings to “ON” in the Service Mode.
3. Sets an encryption word.
4. Select the target device (USB memory or HDD) to save the log files.
   - When selecting USB memory as target, ask the administrator of the MFP to set [Administrator Settings] -> [Security Settings] -> [Security Details] -> [Export Debug Log] to [Allow].
   - Connect the USB memory into the USB port on the right-rear side of the MFP.
5. Try to reproduce the problem/malfunction on the MFP.
6. The problem/malfunction is reproduced.
7. Remove the USB memory if you select USB memory as a target device.
8. When selecting HDD as target, ask the administrator of the MFP to set [Administrator Settings] -> [Security Settings] -> [Security Details] -> [Export Debug Log] to [Allow].
   - Select the debug log(s) that corresponds to the problem, and select "USB Memory" as the output destination and acquire the log(s).
9. Send the log(s) and the USB password to the department of KM from which you receive instructions SEPARATELY.

#### (3) Details of the procedure

##### (a) Advance preparation

- Save a key file into a USB memory.
  1. Set the USB Password on the Key generation utility.
  2. Generate the Key file by typing in the Serial number (capital letter) of the target MFP.
  3. Copy the created "Debug Log" folder into the root directory of the USB memory.
- Make sure that [Administrator Settings] -> [Security Settings] -> [Enhanced Security Mode] is set to OFF.

##### (b) Settings for acquiring logs (When selecting USB memory as a target device)

1. Get permission from the CUSTOMER to retrieve the program sequence logs from the MFP at the customer's site.
   **NOTE**
   - **They do not include the copy/scan/print/fax image data unless selecting printer. Logs include the MFP control program sequences only.**
   - **The top priority of the MFP is to save the logs completely before starting the next job process; so the CUSTOMER will see a pause between jobs. Please explain to the CUSTOMER that the MFP performance will be down during the procedure.**

2. Set the switch number "155" to "01" in HEX Assignment in [Service Mode] -> [System 2] -> [Software Switch Setting].

3. Call the Debug Settings in Service Mode.
4. Select [Enhance] in [Debug Settings] -> [Acquiring Mode].
5. Select the target logs.
   **NOTE**
   - **DO NOT TOUCH the command settings (Individual Command and Command Set) without KM instructions.**

6. Set the USB password in [Debug Settings] -> [USB Password].
   **NOTE**
   - **The USB password set here must be same as the password set in the USB memory in advance preparation procedure.**

7. Exit the Service Mode.
8. Ask the administrator of the MFP to set [Administrator Settings] -> [Security Settings] -> [Security Details] -> [Export Debug Log] to [Allow].
9. Connect the USB memory into the USB port on the right-rear side of the MFP.
10. Try to reproduce the problem/malfunction on the MFP.
    **Cautions when saving log files each time the problem/malfunction is reproduced**
    - **Saved Logs will not be overwritten. USB memory should have enough capacity to save the all logs.**
    - **Debug log function will stop if USB memory is FULL.**
    - **While saving the log data, a specific ICON will appear on the control panel. DO NOT REMOVE the USB memory when the ICON is displayed.**

11. The problem/malfunction is reproduced.
12. Return the switch number "155" in HEX Assignment to "00" in [Service Mode] -> [System 2] -> [Software Switch Setting].
13. Exit the Service Mode.
14. Remove the USB memory from the MFP and check that the USB memory contains the file of which name is "LOGSYS_xxxxxxxxxxx.log".
15. Send KM your request of analyzing the problem with the log file.
    **NOTE**
    - **Send the USB password and log file(s) to the recipient of your request SEPARATELY.**

### (c) Settings for acquiring logs (When selecting HDD as a target device)

1. Get permission from the CUSTOMER to retrieve the program sequence logs from the MFP at the customer's site.
   **NOTE**
   - **They do not include the copy/scan/print/fax image data unless selecting printer. Logs include the MFP control program sequences only.**
   - **The top priority of the MFP is to save the logs completely before starting the next job process; so the CUSTOMER will see a pause between jobs. Please explain to the CUSTOMER that the MFP performance will be down during the procedure.**

2. Set the switch number "155" to "01" in HEX Assignment in [Service Mode] -> [System 2] -> [Software Switch Setting].
3. Call the Debug Settings in Service Mode.
4. Select [Enhance] in [Debug Settings] -> [Acquiring Mode].
5. Select the target logs.
   **NOTE**
   - **DO NOT TOUCH the command settings (Individual Command and Command Set) without KM instructions.**

6. Set the USB password in [Debug Settings] -> [USB Password].
   **NOTE**
   - **The USB password set here must be same as the password set in the USB memory in advance preparation procedure.**

7. Exit the Service Mode.
8. Ask the administrator of the MFP to set a debug log encryption pass phrase in [Administrator Settings] -> [Security Settings] -> [HDD Settings] -> [Debug Log Encryption Settings]. (Default: 01234567890123456789)
   **NOTE**
   - **This setting is used to encrypt debug logs to be stored in the HDD.**
   - **Be sure to set the encryption password. Failure to set the encryption password may hamper correct analysis of the log.**

9. Try to reproduce the problem/malfunction on the MFP.
10. The problem/malfunction is reproduced.
11. Ask the administrator of the MFP to set [Administrator Settings] -> [Security Settings] -> [Security Details] -> [Export Debug Log] to [Allow].
12. Call [Debug Settings] -> [Debug Log Output] to the screen.
13. Connect the USB memory prepared in advance preparation to the USB port located on the right-side of the MFP control panel.
14. Touch [Select File]. Select the intended file and touch [Output] in [HDD -> USB Memory].
15. Check that the Start key lights up in blue, and press the Start key.
    **NOTE**
    - **If the Start key lights up orange, the USB password and/or MFP serial number on for the MFP do not match the key file.**

16. [OK] will be displayed.
17. Touch [OK], and exit the Debug Settings.
18. Return the switch number "155" in HEX Assignment to "00" in [Service Mode] -> [System 2] -> [Software Switch Setting].
19. Exit the Service Mode.
20. Remove the USB memory from the MFP and check that the USB memory contains the file of which name is "LOGSYS_xxxxxxxxxxx.log".
21. Send KM your request of analyzing the problem with the log file.
    **NOTE**
    - **Send the USB password and log file(s) to the recipient of your request SEPARATELY.**

# 10. CONTENTS TO BE CLEARED BY RESET FUNCTION

| Function for clearing / Contents to be cleared | | Front door open/ close | Main power switch OFF/ON | Trouble reset | Initialize | | | | | | | |
|---|---|---|---|---|---|---|---|---|---|---|---|---|
| | | | | | | | Clear Individual Data | | | | | |
| | | | | | System Error Clear | Clear All Data | Copy Program Data | Address Registration Data | Fax Setting Data | All History Data | Network Setting Data | Server Cache Data |
| Jam display | | ○ | - | - | ○ | ○ | - | - | - | - | - | - |
| Malfunction display | Rank A | - | - | ○ | ○ | ○ | - | - | - | - | - | - |
| | Rank B | ○ | - | ○ | ○ | ○ | - | - | - | - | - | - |
| | Rank C | - | ○ | ○ | ○ | ○ | - | - | - | - | - | - |
| Erratic operation / display | | - | ○ | - | ○ | ○ | - | - | - | - | - | - |
| Utility Mode (Except items on engine adjustment) | | - | - | - | - | ○ | - | - | - | - | - | - |
| Job memory setting data | | - | - | - | - | ○ | ○ | - | - | - | - | - |
| Address registration data | | - | - | - | - | ○ | - | ○ | - | - | - | - |
| Fax setting data (Excluding destination related data) | | - | - | - | - | ○ | - | - | ○ | - | - | - |
| History data (Job history, Journal history, Receive reject history, Destination history, Job secure counter) | | - | - | - | - | ○ | - | - | - | ○ | - | - |
| Network setting data (Excluding destination related data) | | - | - | - | - | ○ | - | - | - | - | ○ | - |
| Cache data of external authentication server | | - | - | - | - | ○ | - | - | - | - | - | ○ |
| Service Mode (System 1/2) | | - | - | - | - | △*1 | - | - | - | - | - | - |
| Billing Setting | Management Function Choice | - | - | - | - | ○ | - | - | - | - | - | - |
| Adjustment of the touch panel position | | - | - | - | - | ○ | - | - | - | - | - | - |
| Toner counter | | - | - | - | - | ○ | - | - | - | - | - | - |
| Trouble auto release retry count | | - | - | - | ○ | ○ | - | - | - | - | - | - |

○: Will be cleared (initialized)
- : Will not be cleared

| △ *1: Items to be cleared | |
|---|---|
| System 1 | Marketing Area (Fax Target only) |
| System 2 | HDD |
| | Image Controller Setting |

# 11. MECHANICAL ADJUSTMENT bizhub C368/C380/C258

## 11.1 Scanner section

### 11.1.1 Adjustment of the scanner motor belt

#### (1) Purpose

This adjustment must be made in the following case:
- The scanner motor assy has been removed.

#### (2) Procedure

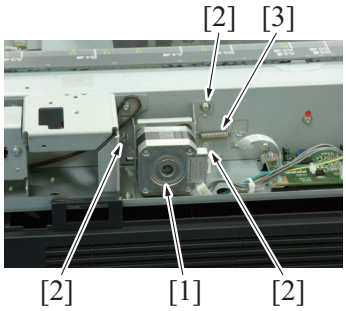


1. Attach the spring [3] to the scanner motor assy [1].
2. Temporarily secure the scanner motor assy [1] with three screws [2].
   **NOTE**
   - **The screws [2] should be temporarily tightened to a degree that the position of the motor can be adjusted by the spring force.**
   - **When installing the scanner motor, make sure that the scanner motor is disconnected with the connector.**

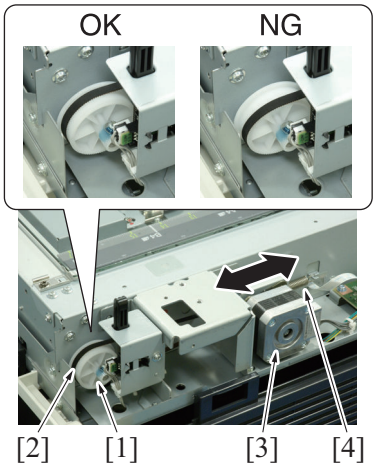


3. Attach the drive belt [2] to the pulley [1] and the gear of scanner motor.
4. Move the scanner motor assy [3] in the direction shown in the illustration for two to three times, then make sure that it runs smoothly.
   **NOTE**
   - **Make sure that the drive belt [2] is properly kept tight by the spring [4] force.**
   - **If the deflection or tension of the drive belt [2] is excessive, the scanner unit does not work correctly. This may result in trouble.**
   - **Make sure that the drive belt [2] is attached to the pulley [1] correctly.**

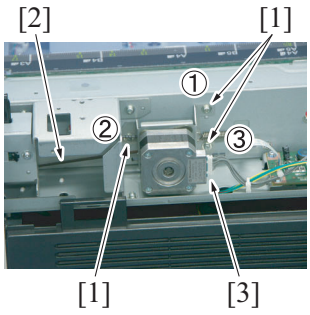


5. Tighten three screws [1] in the order shown in the illustration to fix the scanner motor assy.
6. Connect the connector [3] to the scanner motor.
   **NOTE**
   - **When tightening the screw [1], make sure that the scanner motor assy is not touched.**
   - **After securing the scanner motor assy, check again that the deflection and tension of the drive belt [2] are not excessive.**

## 11.2 Paper feed section

### 11.2.1 Centering adjustment of the tray 1/2

#### (1) Purpose

This adjustment must be made in the following case:
- When an image printed on a copy is displaced from the correct position with the use of the tray1/2.

#### (2) Procedure

1. Make a test print and check the amount of misalignment.
2. Pull out the tray where this adjustment is made.

3. Stretch the paper guides [1] to the maximum size position.

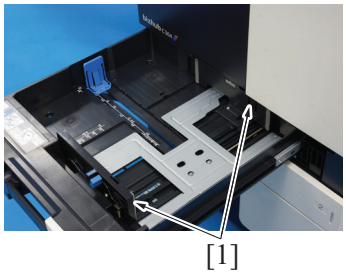


4. Loosen two screws [1].

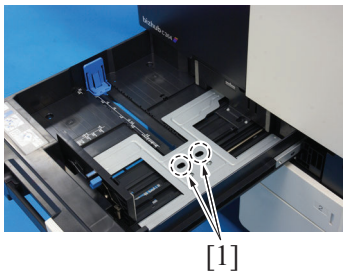


5. Move the paper guides [1] complete according to the amount of the mis-centering you checked in step 1 and adjust the center position of it.
6. Tighten two screws [2].

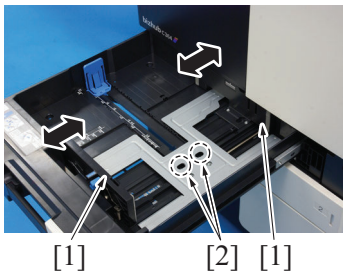


7. Make another test print and check the amount of misalignment.

### 11.2.2 Pick-up pressure adjustment of the tray 1/2

#### (1) Purpose

This adjustment must be made in the following case:

- When paper jam occurs while thin paper (52 g/m$^2$) is fed.

#### (2) Procedure

1. Remove the paper feed unit.
   G.5.3.2 Paper feed unit

2. Remove the spring [1] stored for replacement from the paper feed unit.

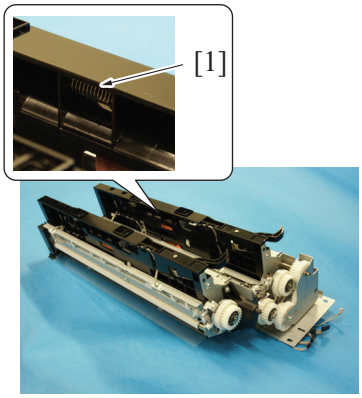

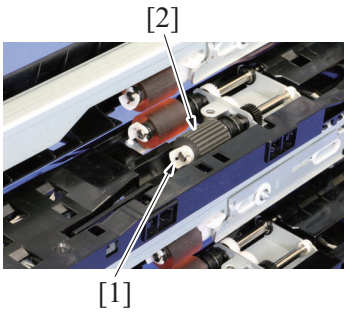


3. Remove the C-clip [1], and remove the tray 2 pick-up roller [2].

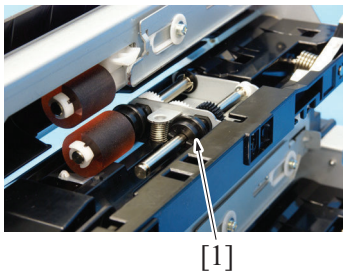


4. Remove the bushing [1].

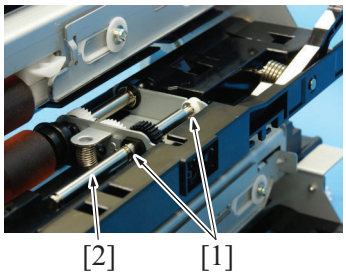


5. Remove two E-rings [1], and remove the shaft [2] of the pick-up roller.

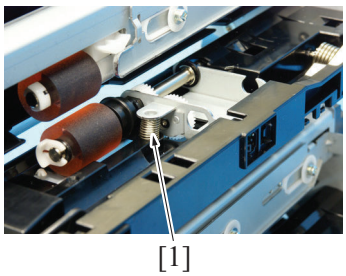


6. Remove the spring [1] and replace it with the replacement spring prepared in step 2.
**NOTE**
- **The pick-up pressure of the tray 1 can be adjusted by replacing the spring of the tray 1 paper feed unit with the replacement spring prepared in step 2.**

7. To reinstall, reverse the order of removal.
8. Make a test print to check whether paper is fed properly.

### 11.2.3 Separator roller pressure adjustment of the bypass tray

#### (1) Purpose

This adjustment must be made in the following case:

- When paper jam occurs with a specific type of thick paper (300 g/m$^2$) is fed.

#### (2) Procedure

1. Open the right door.

2. Remove the screw [1], and remove the cover [2].

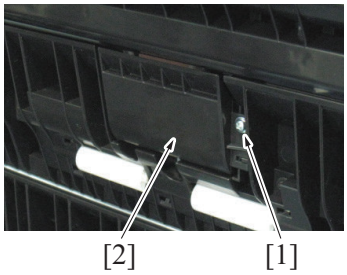


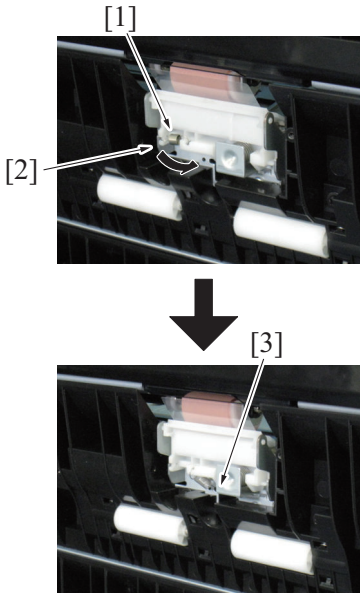


3. Hold the edge of the spring [1] with a plier, etc, to pull it off the hook part [2].
4. Hook the edge of the removed spring to the hook part [3] shown on the illustration.

5. Make a test print to check whether paper is fed properly.
6. When returning the pressure to the original status, return the hook of the spring in reverse steps.

### 11.2.4 Adjustment of the bypass CD paper size VR

#### (1) Purpose

This adjustment must be made in the following case:

- The bypass CD paper size VR has been removed.

#### (2) Procedure

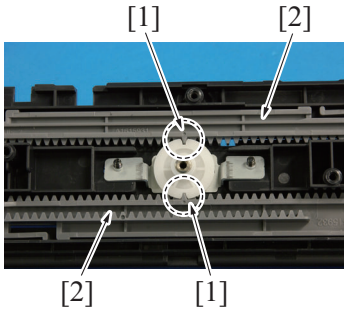


1. Align the match mark [1] on the bypass guide rack gear with the groove on the gear rim at two places and install two bypass guide rack gears [2].

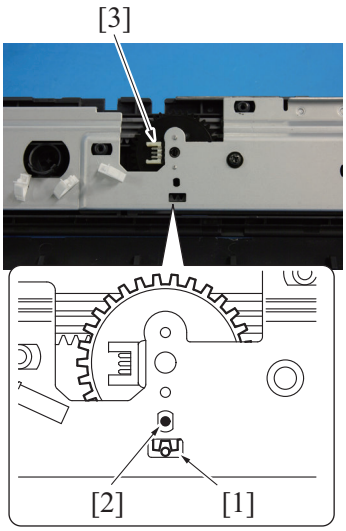


2. When installing the bypass CD paper size VR assy [3], make sure that the part [1] (pointed by the arrow) on the bypass guide rack gear and the gear's hole [2] on the bypass CD paper size VR assy are placed in a straight line.
3. Secure the bypass CD paper size VR assy with two screws.
4. After the bypass CD paper size VR base has been mounted, check that the lever of the bypass CD paper size VR moves smoothly in a manner operatively connected to the bypass guide.
5. Call the Service Mode to the screen and select [Machine] -> [Manual Bypass Tray Width Adj]. Then, carry out manual bypass tray width adjustment.

## 11.3 Fusing section

### 11.3.1 Adjusting the parallelism of the fusing unit path

#### (1) Purpose

This adjustment must be made in the following case:

- When the second transfer paper feed path and the fusing section path are not parallel and caused wrinkles on the paper.

#### (2) Procedure

1. Remove the fusing unit.
   F.6.9.1 Replacing the fusing unit

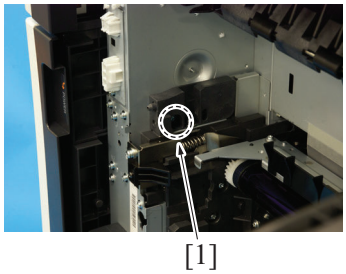


2. Remove the screw [1] for the fusing unit positioning material.

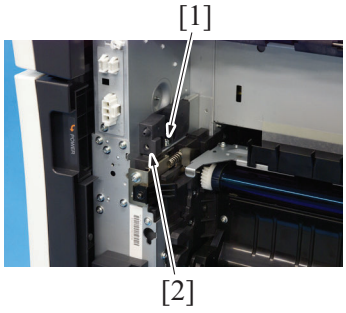


3. Remove the screw [1], and remove the fusing unit positioning material [2].

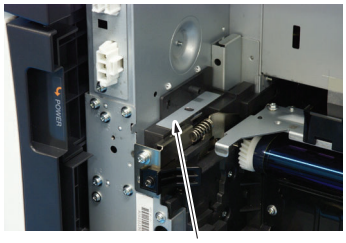

[1]

5. To reinstall, reverse the order of removal.
6. Make a test print to check whether paper is fed properly.

4. 0.6 mm adjusting shim plate [1] is installed as the standard status. Add or reduce the number of shims to adjust the parallelism.
   - Removing the standard adjusting shim plate: The fusing unit mounting position (front side) will move down by 0.6 mm.
   - Adding one adjusting shim plate: The fusing mounting position (front side) will move up by 0.6mm.

   Adjusting shim plate parts number: A161 1126##

# 12. MECHANICAL ADJUSTMENT DF-629

## 12.1 Original document feed section

### 12.1.1 Adjusting the height

#### (1) Purpose

This adjustment must be made in the following case:
- When the reverse automatic document feeder has been reinstalled.

#### (2) Procedure

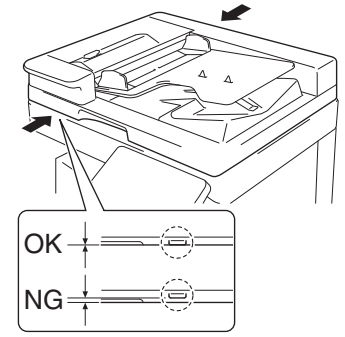


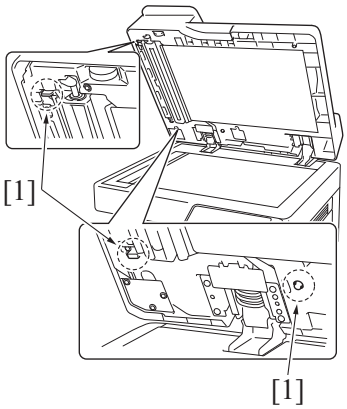


1. Check the clearance between the upper face of scanner and the protrusion [1] on the reverse automatic document feeder side (3 spots).
   **NOTE**
   - **There must be no clearance between the protrusion [1] on the reverse automatic document feeder and the upper face of scanner.**
2. If there is any clearance, the following adjustment is needed.

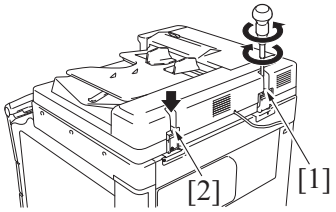


3. Remove the clearance by turning the adjusting screw [1].
   - Clockwise rotation: Lifting up the rear side
   - Counterclockwise rotation: Lowering the rear side
4. Use the adjusting screw [2] when further adjustment is needed.
   - Clockwise rotation: Lifting up the rear side
   - Counterclockwise rotation: Lowering the rear side

### 12.1.2 Adjusting front side skew feed on ADF

#### (1) Purpose

This adjustment must be made in the following case:
- When the reverse automatic document feeder has been reinstalled.

#### (2) Procedure

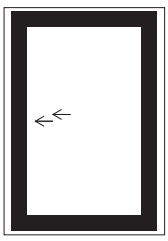

1. Place the chart [1] in the document feed tray. (with the side having an arrow facing up)

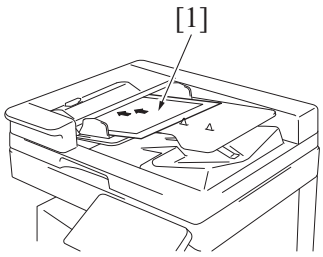


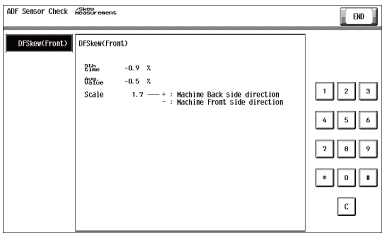


2. Scan the chart five times by selecting [Service Mode] -> [ADF] -> [Skew Measurement] -> [DFSkew(Front)] and measure the average Skew value.
3. Check the [Avg. Value] is within the "specified range".
   Specifications: ±0.5%
4. If the value of [Avg. Value] does not fall within the "specified range", perform the following adjustment.

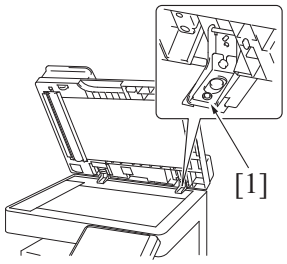


5. Loosen the mounting screw [1] on the right hinge viewed from the front.

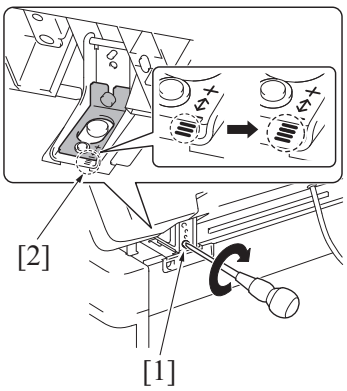


6. If "1.0" is displayed in the [Scale], turn the adjuster screw clockwise to move the scale scribe line one graduation in the "+" direction.
   Example: If the scribe line is on graduation "3" before adjusting, adjust the scribe line to graduation "4".
   **NOTE**
   - **Look at the guide lines [2] when making the adjustment.**
   - **Be sure not to turn the adjustment screw [1] when the reverse automatic document feeder is opened at 90 degrees to prevent the screw from being broken.**

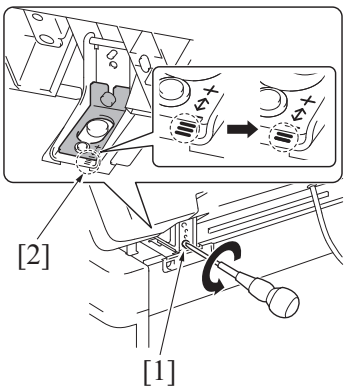


7. If "-1.0" is displayed in the [Scale], turn the adjuster screw counterclockwise to move the scale scribe line one graduation in the "-" direction.
   Example: If the scribe line is on graduation "3" before adjusting, adjust the scribe line to graduation "2".
   **NOTE**
   - **Look at the guide lines [2] when making the adjustment.**
   - **Be sure not to turn the adjustment screw [1] when the reverse automatic document feeder is opened at 90 degrees to prevent the screw from being broken.**

8. After the adjustment is completed, tighten the mounting screw [1] on right side hinge securely with screwdriver.

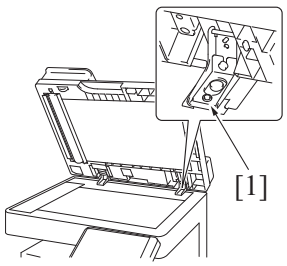


9. Re-scan the chart five times by selecting [Service Mode] -> [ADF] -> [Skew Measurement] -> [DFSkew(Front)] and measure the average Skew value.
10. Check the [Avg. Value] is within the "specified range".
11. If the value of [Avg. Value] does not fall within the "specified range", repeat the adjustment.

### 12.1.3 Adjusting the pressure of the separation roller

#### (1) Purpose

This adjustment must be made in the following case: The adjustment is available in two different levels.

- Original misfeed often occurs.

#### (2) Procedure

1. Open the left cover [1].

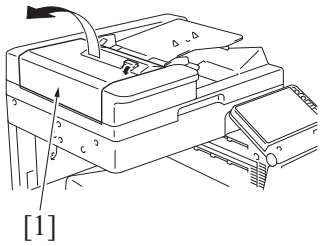


2. Grip both sides [1] of the holder and remove the cover [2].

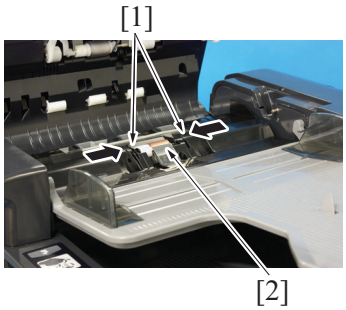


3. Remove the spacer [1] shown on the illustration.

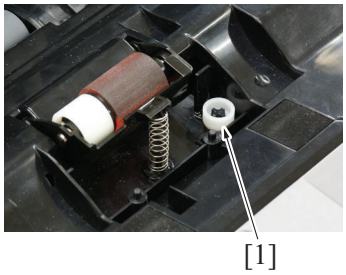

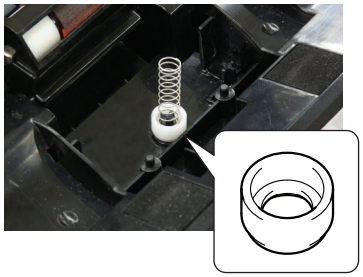

4. Set the spacer to the lower part of the spring in the direction shown on the illustration (with deeper groove facing upper side).
**NOTE**
- **When this procedure does not improve the situation, carry out the adjustment below for the stronger spring force.**

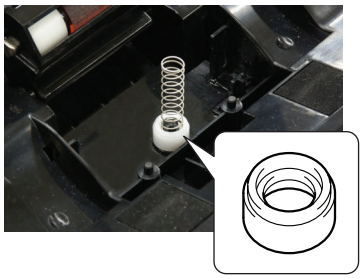

5. Set the spacer to the lower part of the spring in the direction shown on the illustration (with shallow groove facing upper side).

# 13. MECHANICAL ADJUSTMENT DF-704

## 13.1 Original document feed section

### 13.1.1 Adjusting the height

#### (1) Purpose

This adjustment must be made in the following case:
- When the dual scan document feeder has been reinstalled.

#### (2) Procedure

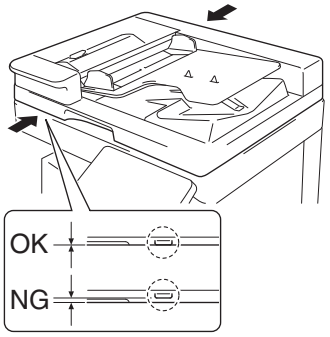


1. Check the clearance between the upper face of scanner and the protrusion [1] on the dual scan document feeder side (3 spots).
   **NOTE**
   - **There must be no clearance between the protrusion [1] on the dual scan document feeder and the upper face of scanner.**
2. If there is any clearance, the following adjustment is needed.

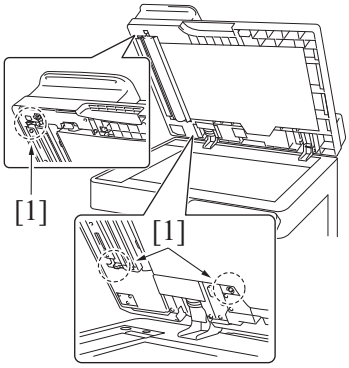


3. Remove the clearance by turning the adjusting screw [1].
   - Clockwise rotation: Lifting up the rear side
   - Counterclockwise rotation: Lowering the rear side
4. Use the adjusting screw [2] when further adjustment is needed.
   - Clockwise rotation: Lifting up the rear side
   - Counterclockwise rotation: Lowering the rear side

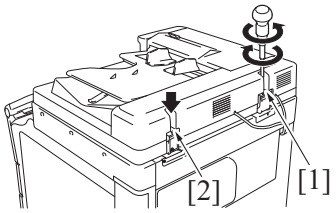


### 13.1.2 Adjusting front side skew feed on ADF

#### (1) Purpose

This adjustment must be made in the following case:
- When the dual scan document feeder has been reinstalled.

#### (2) Procedure

1. Place the chart [1] in the document feed tray. (with the side having an arrow facing up)

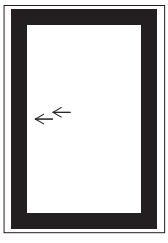

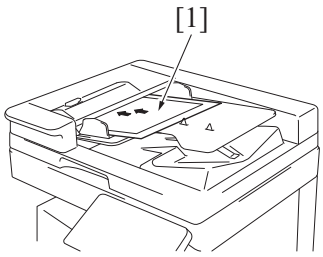


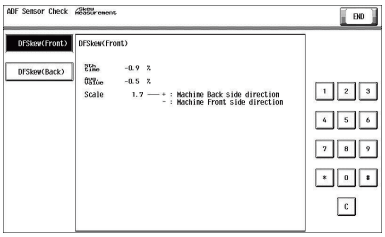


2. Scan the chart five times by selecting [Service Mode] -> [ADF] -> [Skew Measurement] -> [DFSkew(Front)] and measure the average Skew value.
3. Check the [Avg. Value] is within the "specified range".
   Specifications: ±0.5%
4. If the value of [Avg. Value] does not fall within the "specified range", perform the following adjustment.

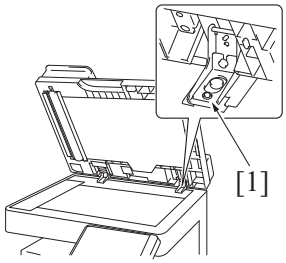


5. Loosen the mounting screw [1] on the right hinge viewed from the front.

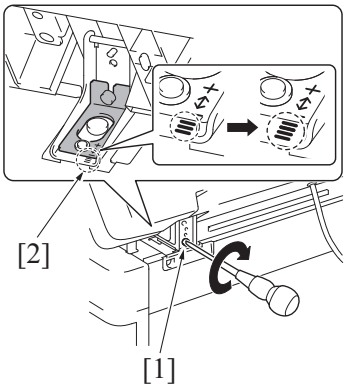


6. If "1.0" is displayed in the [Scale], turn the adjuster screw clockwise to move the scale scribe line one graduation in the "+" direction.
   Example: If the scribe line is on graduation "3" before adjusting, adjust the scribe line to graduation "4".
   **NOTE**
   - **Look at the guide lines [2] when making the adjustment.**
   - **When turning the screw, be sure not to raise the dual scan document feeder until in an upright position.**

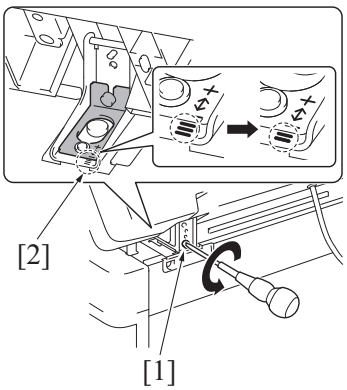


7. If "-1.0" is displayed in the [Scale], turn the adjuster screw counterclockwise to move the scale scribe line one graduation in the "-" direction.
   Example: If the scribe line is on graduation "3" before adjusting, adjust the scribe line to graduation "2".
   **NOTE**
   - **Look at the guide lines [2] when making the adjustment.**
   - **When turning the screw, be sure not to raise the dual scan document feeder until in an upright position.**

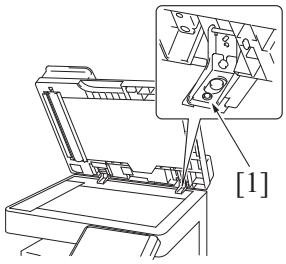


8. After the adjustment is completed, tighten the mounting screw [1] on right side hinge securely with screwdriver.

9. Re-scan the chart five times by selecting [Service Mode] -> [ADF] -> [Skew Measurement] -> [DFSkew(Front)] and measure the average Skew value.
10. Check the [Avg. Value] is within the "specified range".
11. If the value of [Avg. Value] does not fall within the "specified range", repeat the adjustment.

### 13.1.3 Adjusting back side skew feed on ADF

#### (1) Purpose

This adjustment must be made in the following case:
- When the dual scan document feeder has been reinstalled.
- When the CIS module has been reinstalled.

#### (2) Procedure

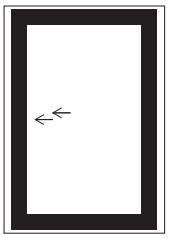

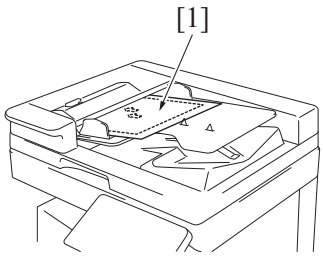


1. Place the chart [1] in the document feed tray. (Set the chart with its blank side facing upward)

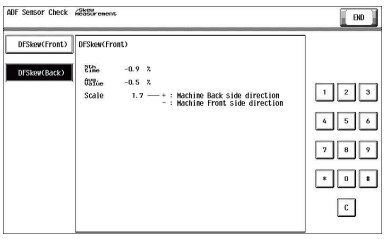


2. Scan the chart five times by selecting [Service Mode] -> [ADF] -> [Skew Measurement] -> [DFSkew(Back)] and measure the average Skew value.
3. Check the [Avg. Value] is within the "specified range".
   Specifications: ±0.5%
4. If the value of [Avg. Value] does not fall within the "specified range", perform the following adjustment.

5. Remove the front cover of the dual scan document feeder.
   G.6.3.1 Front cover (DF-704)

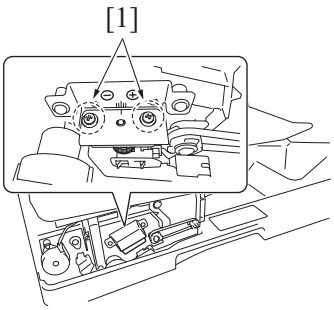


6. Loosen two screws [1].

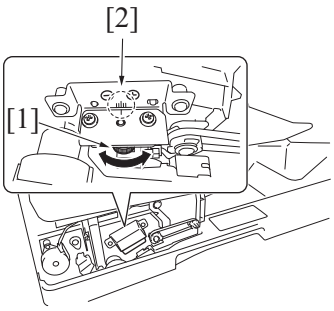


7. Depending on the difference of the deviations, turn the adjustment dial [1] using the marks [2] as a guide.
   - When the difference is a positive (+) value, turn the dial clockwise.
   - When the difference is a negative (-) value, turn the dial counterclockwise.

8. After completing the adjustment, tighten the screw loosened in step 8.
9. Re-scan the chart five times by selecting [Service Mode] -> [ADF] -> [Skew Measurement] -> [DFSkew(Back)] and measure the average Skew value.
10. Check the [Avg. Value] is within the "specified range".
11. If the value of [Avg. Value] does not fall within the "specified range", repeat the adjustment.
12. Install the front cover.

### 13.1.4 Adjusting the pressure of the separation roller

#### (1) Purpose

This adjustment must be made in the following case: The adjustment is available in two different levels.
- Original misfeed often occurs.

#### (2) Procedure

1. Open the left cover [1].

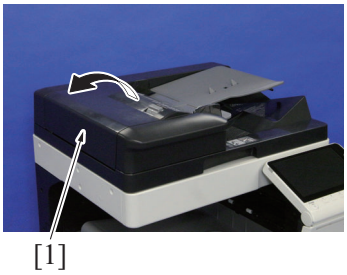


2. Grip both sides [1] of the holder and remove the cover [2].

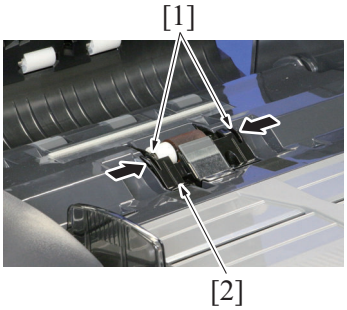

3. Remove the spacer [1] shown on the illustration.

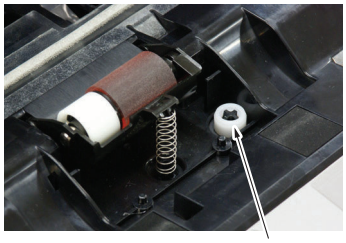


4. Set the spacer to the lower part of the spring in the direction shown on the illustration (with deeper groove facing upper side).
**NOTE**
- **When this procedure does not improve the situation, carry out the adjustment below for the stronger spring force.**

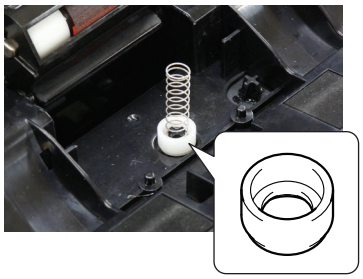

5. Set the spacer to the lower part of the spring in the direction shown on the illustration (with shallow groove facing upper side).

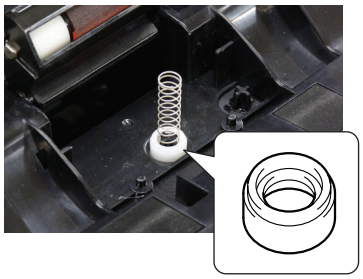

# 14. MECHANICAL ADJUSTMENT PC-110/PC-210

## 14.1 Paper reference position

### 14.1.1 Purpose

This adjustment must be made in the following case:

- When the PH unit has been replaced.
- When the image on the print is offset in the main scan direction.
- When adjustment in [Service Mode] -> [Machine] -> [Printer Area] -> [Printer Image Centering Side 1] does not resolve a problem.

**NOTE**

- **When the optional finisher FS-534 is installed, mechanical adjustment is necessary before adjustment [Printer Image Centering Side 1].**

### 14.1.2 Procedure

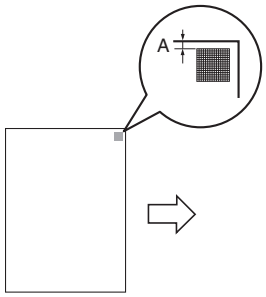


*1.* Measure the width of printed reference line A.
Target: 3.0 mm ± 1.0 mm

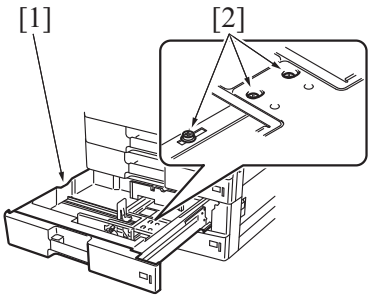


*2.* Slide out the tray [1] and unload paper from it.
*3.* Loosen three screws [2] at the center of the paper lifting plate.

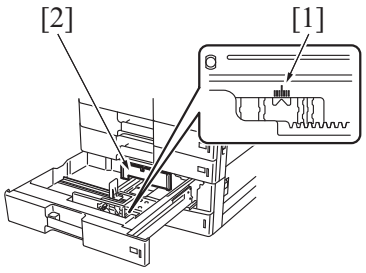


*4.* Watching the graduations [1] provided in the drawer, move the paper width guide [2] in the rear.
- If width A is greater than the target, move the paper width guide toward the front.
- If width A is smaller than the target, move the paper width guide toward the rear.

*5.* Tighten three screws which have been loosened.
*6.* Perform another test print and check the reference deviation.

# 15. MECHANICAL ADJUSTMENT PC-410

## 15.1 Paper reference position

### 15.1.1 Purpose

This adjustment must be made in the following case:

- When the PH unit has been replaced.
- When the image on the print is offset in the main scan direction.
- When adjustment in [Service Mode] -> [Machine] -> [Printer Area] -> [Printer Image Centering Side 1] does not resolve a problem.

**NOTE**

- **When the optional finisher FS-534 is installed, mechanical adjustment is necessary before adjustment [Printer Image Centering Side 1].**

### 15.1.2 Procedure

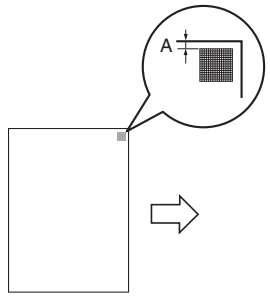


1. Measure the width of printed reference line A.
   Target: 3.0 mm ± 1.0 mm

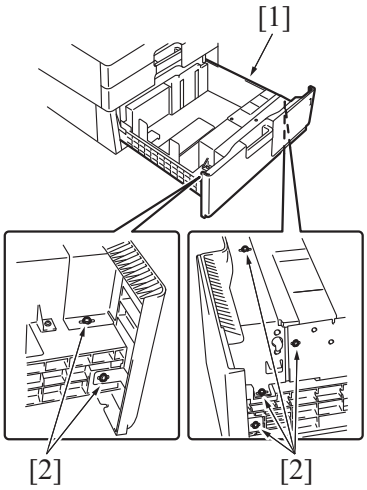


2. Slide out the paper feed tray [1] and unload paper from it.
3. Loosen six screws [2].

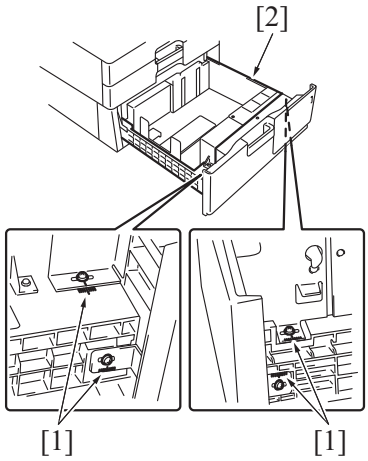


4. Watching the graduations [1] provided near the screws, move the front cover assy [2].
   - If width A is greater than the target, move the front cover assy toward the rear.
   - If width A is smaller than the target, move the front cover assy toward the front.

5. Tighten six screws which have been loosened.
6. Perform another test print and check the reference deviation.

## 15.2 Shifter movement timing belt adjustment

### 15.2.1 Procedure

1. Remove the paper feed tray.
   G.6.5.4 Paper feed tray (PC-410)

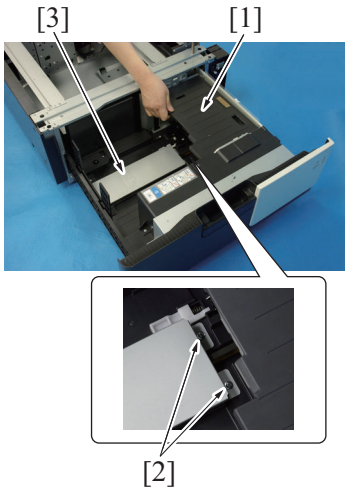


2. While raising the main tray [1], and remove two screws [2] that hold the shift tray in position.
   **NOTE**
   - **When reinstalling, use caution because the wire of the main tray [1] comes off easily.**
3. Remove the shift tray [3].

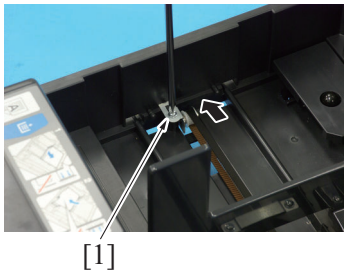


4. Move the sifter.
5. Loosen the tension pulley assy fixing screw [1] and move it in the direction of the arrow.
6. After moving the shifter, tighten the tension pulley assy fixing screw [1].

# 16. MECHANICAL ADJUSTMENT LU-302

## 16.1 Paper feed section

### 16.1.1 Centering adjustment of the LCT

#### (1) Purpose

This adjustment must be made in the following case:

- When adjustment in [Service Mode] -> [Machine] -> [Printer Area] -> [Printer Image Centering Side 1] does not resolve a problem.

#### (2) Procedure

1. Call the Service Mode to the screen.
2. Touch [Machine].
3. Touch [Printer Area].
4. Touch [Centering].
5. Touch [LCT].
6. Press the Start key to let the machine produce a test print.

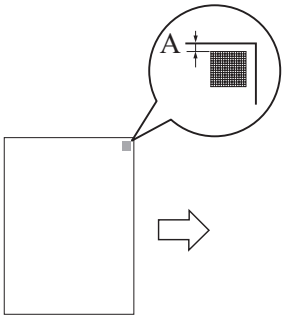


7. Measure the width of printed reference line A.
   Target A: 3.0 mm ± 1.0 mm
8. If the measured width A falls outside the target, enter the correction value using the [-] or [+] key.
9. Produce another test print and check to see if width A falls within the target.
10. If the use of the [-] or [+] key does not allow the measurement to fall within the target, perform the following steps.

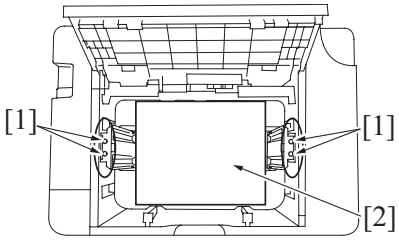


11. Open the upper door on LCT to loosen four screws [1].
    **NOTE**
    - **During adjustment, in order to keep the same distance between the paper guide side plates, place a sheet of paper [2] between the paper guide side plates with 1.0 mm apart from each of the plates.**

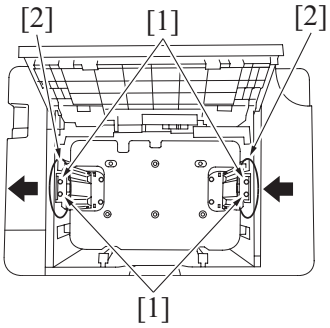


12. When the width A is larger than the target.
    Move the paper guide side plates [2] leftward and tighten four loosened screws [1].

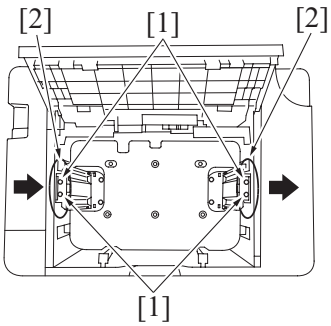


13. When the width A is smaller than the target.
    Move the paper guide side plates [2] rightward and tighten four loosened screws [1].
14. Load paper and let the machine produce another test print. Then, check width A.
15. Make the adjustment until width A falls within the target.

### 16.1.2 Pick-up roller load adjustment of the LCT

#### (1) Purpose

This adjustment must be made in the following case:

- Incase a no feed jam occurs frequently, perform the pick-up roller load adjustment.

### (2) Procedure

1. Open the upper door.

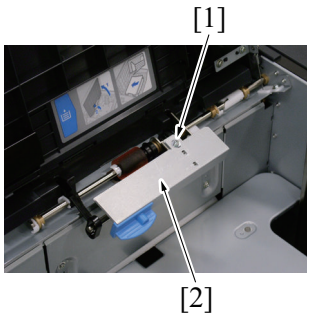


2. Remove the screw (M3 x 8 mm: V116 0308 03) [1] and remove the paper assist plate assy [2].

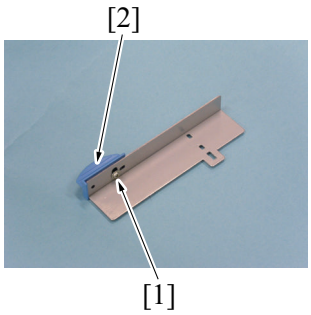


3. Remove the screw [1] and remove the assist handle [2].

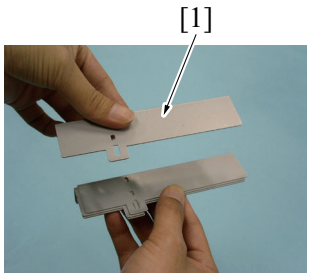


4. Add one more paper assist plate (A03N 5604 ##) [1] to the original ones.
   **NOTE**
   - **Adding only one paper assist plate is allowed and the total needs to be up to four.**

5. Reinstall the assist handle that was removed in step 3, securing it with the screw.
6. Reinstall the paper assist plate assy with a new screw (M3 X 10 mm: V118 0310 03). The screw removed in step 2 (M3 X 8 mm: V116 0308 03) cannot be used to reinstall the assy.
7. Close the upper door.
8. Perform copying/printing to check whether the no feed or the double feed occurs or not.

# 17. MECHANICAL ADJUSTMENT PK-519

## 17.1 Punch section

### 17.1.1 Punch hole deviation correction

#### (1) Purpose

This adjustment must be made in the following case:
- The punch holes are on a slanted line.

#### (2) Procedure

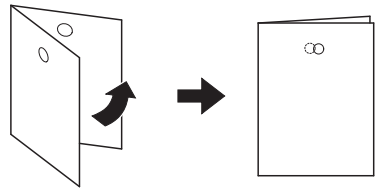

1. Set the mode to Punch mode for printing.
2. Hold the output paper half and check the displacement of the punch hole.
   Target: 0 ± 2.0 mm

3. If the positional deviation of the punch holes is not within the target range, take the following steps.
4. Slide the finisher by pulling its lever.

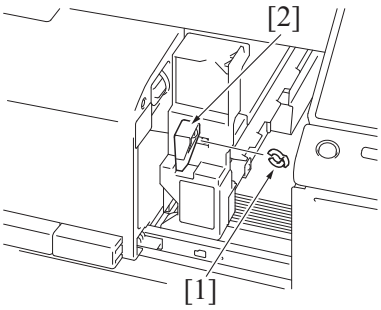


5. Remove the C-clip [1], and remove the lever [2].

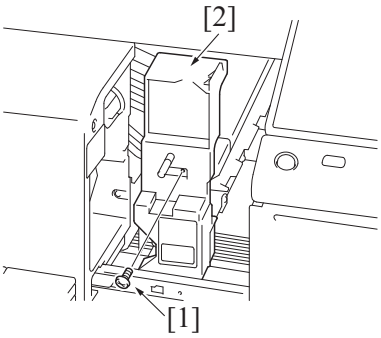


6. Remove the screw [1], and remove the cover [2].

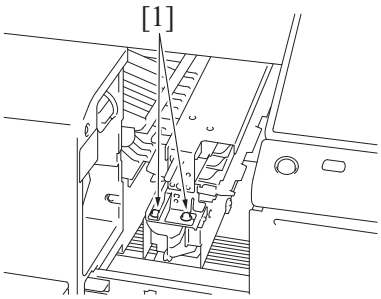


7. Loosen two screws [1].

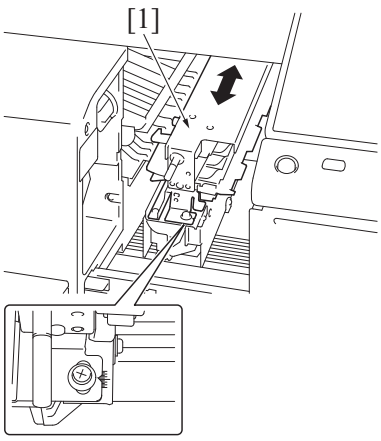


*8.* Move the punch unit [1] back and forth to adjust its position, referring to the guide lines.

*9.* To reinstall, reverse the order of removal.
*10.* Make a copy and check the punch hole positions again.

# 18. MECHANICAL ADJUSTMENT PK-520

## 18.1 Punch section

### 18.1.1 Punch hole deviation correction

#### (1) Purpose

This adjustment must be made in the following case:
- The punch holes are on a slanted line.

#### (2) Procedure

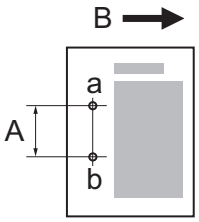


1. Make a 1sided copy sample in the punch mode. Face the printed surface upward.
   - [A]: The distance between holes
   - [B]: Paper feeding direction
   - [a]: Upper punch hole
   - [b]: Lower punch hole

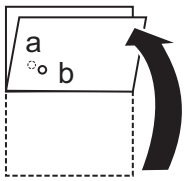


2. Fold the paper in half along the center in the paper feeding direction.

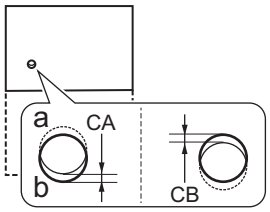


3. Measure the deviation amount [C] between punch holes [a] and [b].
   Target: D = 0 ± 1.0 mm

Ex.1

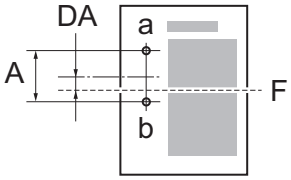


4. If the deviation between the punch holes [a] and [b] is [CA], the punch holes deviate upward in the figure relative to the paper folding line [F] (center in the paper feeding direction).
   Ex.1: Punch hole deviation amount [DA] = Measured value [CA] 3 mm ÷ 2 = -1.5 mm (hole positions deviate upward)

Ex.2

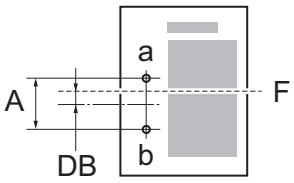


5. If the deviation between the punch holes [a] and [b] is [CB], the punch holes deviate downward in the figure relative to the paper folding line [F] (center in the paper feeding direction).
   Ex.2: Punch hole deviation amount [DB] = Measured value [CB] 3 mm ÷ 2 = +1.5 mm (hole positions deviate downward)

Ex.3

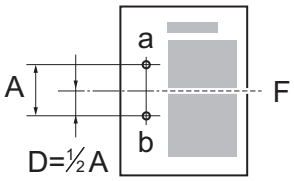


6. Complete the adjustment, if the deviation amount [D] between punch holes [a] and [b] falls within the target (±1.0 mm or less).
   Ex.3: Punch hole deviation amount [D] = Measured value [C] 0mm÷2 = 0 (punch hole deviation amount falls within the target)

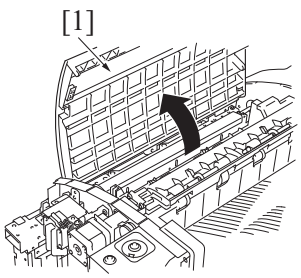


7. In case the figure exceeds the above mentioned target, follow the procedures shown below.
8. Open the upper cover [1].

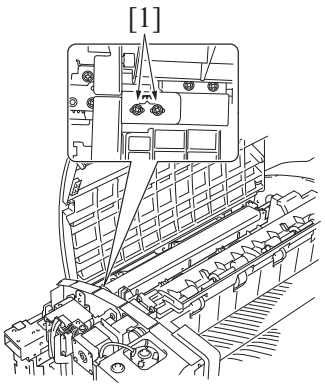


*9.* Loosen two screws [1].

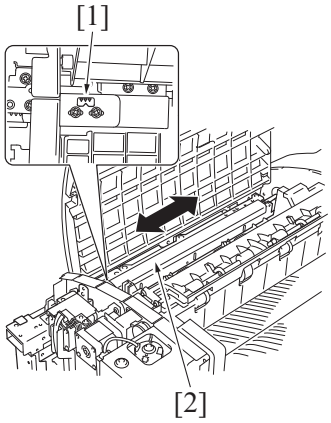


*10.* Using the triangle marks [1] on the plate as a guide, move the punch unit [2] back and forth to adjust its position.

# 19. MECHANICAL ADJUSTMENT FS-534SD

## 19.1 Paper exit section

### 19.1.1 Half-fold skew adjustment

#### (1) Purpose

This adjustment must be made in the following case:
- Fold line goes off the tolerance in the half-fold mode.
- When reinstalling the guide plate assy, perform mechanical adjustment.

#### (2) Procedure

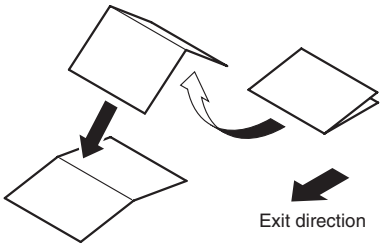


1. Make a copy in the half-fold mode.
2. Unfold the paper that exits the machine and lay the paper with the ridge facing up.

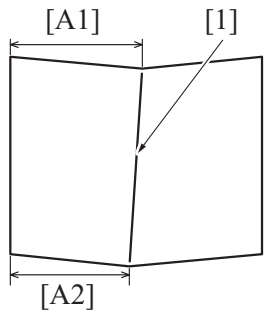


3. Confirm the skew of the fold line [1] of the output copy sample (Widths of A1 and A2)
   Target: A1-A2=±1.0 mm
4. In case the figure exceeds the above mentioned target, follow the adjustment procedures below.

5. Open the front door of the finisher.
6. Pull the saddle unit.

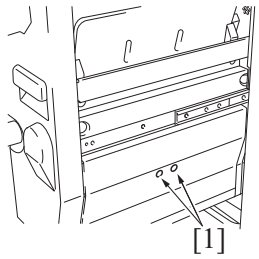


7. Loosen two screws [1].

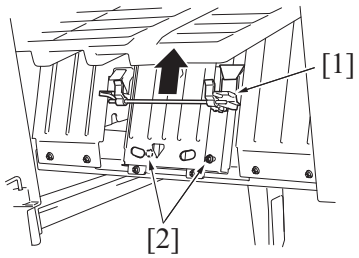


8. Slide the lever unit [1] upward.
9. Loosen two screws [2].

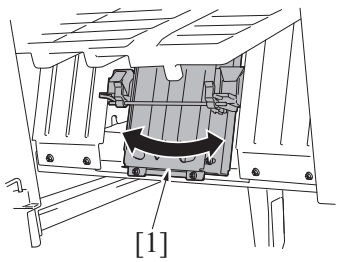


10. Incline the guide plate assy [1] forward or backward according to the deviation of the crease.

In case the cease [1] skews as the right side:

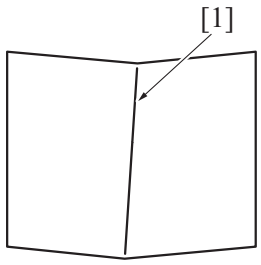


- In case the cease skews as the right side:
  Incline the guide plate assy backward.
- In case the cease skews as the left side:
  Incline the guide plate assy forward.

In case the cease [1] skews as the left side:

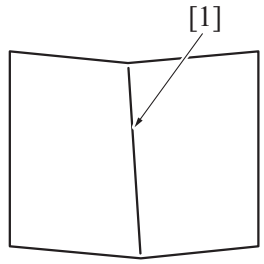


*11.* Make the copy sample again to confirm the cease skew.
*12.* Reinstall the above parts following the removal steps in reverse.

# J REWRITING OF FIRMWARE

- There are two ways to update the firmware: One is by directly connecting with the main body using the USB memory device, and the other is by downloading over a network using the Internet ISW.

**NOTE 1**

- **The settings in the "Utility" mode and the "Service Mode" will not be changed, when the firmware is updated.**
- **Activate the loadable device driver and voice data as required in accordance with the rewriting firmware or user's environment.**

1. **[Service Mode] -> [System 2] -> [Install Data]**
2. **Turn OFF and ON the main power switch and sub-power switch.**
3. **Upgrade the printer driver version.**

# 1. Confirming the firmware version

## 1.1 Procedure

1. Call the Service Mode to the screen.
2. Select the [Firmware Version].
3. Check the current firmware version.

**NOTE**

- **After conducting firmware updating, check the firmware version No. and confirm that the firmware has been normally updated.**

# 2. USB memory

**NOTE**

- **USB memory must be connected with the main power switch off.**

## 2.1 Preparation

### 2.1.1 System preparation

- PC with USB ports
- USB memory

  **NOTE**

  - **Possible to be non-operational products.**
  - USB flash memory compatible with the USB (1.1/2.0/3.0) interface
    The speed is limited to USB2.0 specifications even if using a device that supports USB3.0.
  - The USB memory is formatted in FAT32 format.
  - No security functions such as encryption and password lock have been added (or the USB memory allows its security functions to be turned OFF).
  - A USB memory that is recognized by the computer as two or more drives cannot be used.
  - We recommend that you use a memory device with no more than 32 GB of capacity.

### 2.1.2 USB memory used to update firmware

1. Uncompress the firmware file.
2. Connect the USB memory to the PC, and copy the extracted data [FW0002] to the root directory of the USB memory.

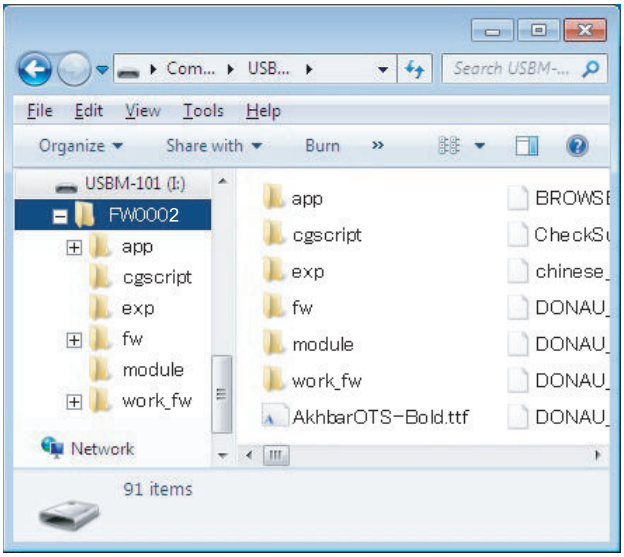


**NOTE**

- **More than one firmware data with a single model can be stored in the USB memory.**
- **In this case, copy the firmware data to the USB memory according to the following procedures.**
  1. **Make the folder named "FWSelect" (case-sensitive) to the root directory of the USB memory.**
  2. **Make a folder with any folder name (one byte alphameric characters, maximum 40 characters) under "FWSelect" folder, and store the firmware data to the folder.**

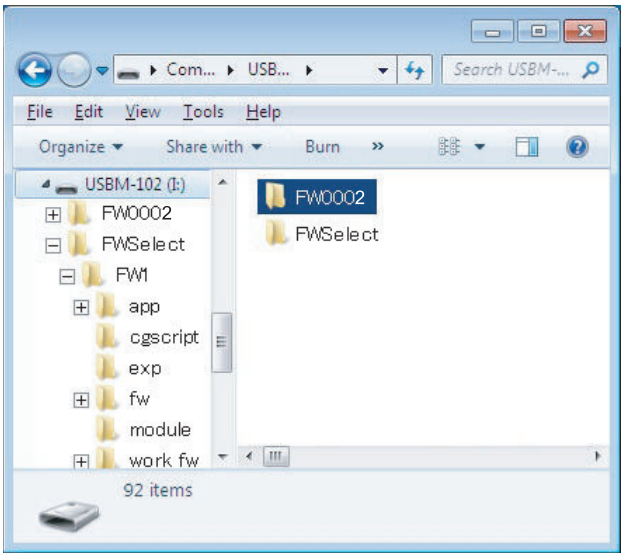


## 2.2 Procedure

1. Turn OFF the main power switch.

2. Connect the USB memory containing the firmware into the USB port on the right side of the operation panel.



**NOTE**
- **USB memory must be connected with the main power switch off.**

3. Turn the main power switch ON while pressing the Stop key.
4. Control panel shows F/W items to be updated, and select the particular type of F/W to be updated. (Select [YES].)

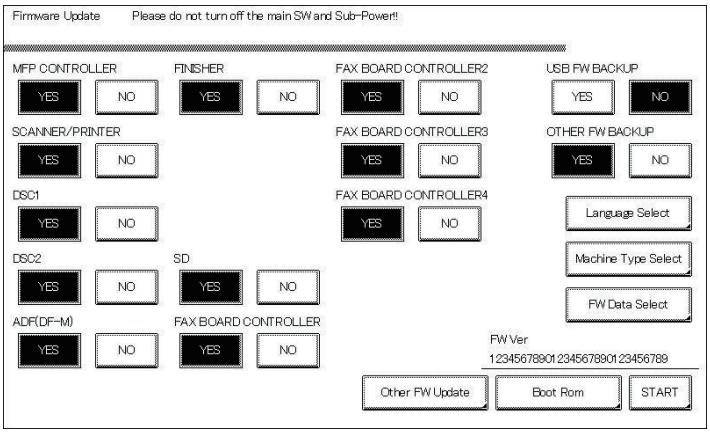


| F/W to be updated | Appropriate board | Remark |
|---|---|---|
| MFP CONTROLLER | eMMC board (eMMC) | - |
| SCANNER/PRINTER | MFP board (MFPB) | - |
| FAX BOARD CONTROLLER1 | Fax board/1 (FAXB/1) | Only when FK-514 is mounted |
| FAX BOARD CONTROLLER2 | Fax board/2 (FAXB/2) | Only when FK-514 is mounted |
| FAX BOARD CONTROLLER3 | Fax board/3 (FAXB/3) | Only when FK-515 is mounted |
| FAX BOARD CONTROLLER4 | Fax board/4 (FAXB/4) | Only when FK-515 is mounted |
| ADF (DF-M) | DF control board (DFCB) | Only when DF-704/DF-629 is mounted |
| FINISHER | FS control board (FSCB) | Only when FS-533 or FS-534 is mounted |
| SD | SD drive board (SDDB) | Only when FS-534SD is mounted |
| DSC1 | DSC board/1 (DSCB/1) | Only when SC-508 is mounted |
| DSC2 | DSC board/2 (DSCB/2) | Only when SC-508 is mounted |

**NOTE**
- **Unless one of the keys on the control panel is pressed, firmware is automatically updated after 30 seconds when the main power switch is turned on.**
- **When the BootRom file is in the firmware data, [BootRom] key is displayed. Pressing the key updates data.**
- **If either or both of the SCB file and power sub CPU file are contained within the firmware data, the [Other FW Update] key displays. Press the key to update.**
- **When more than one firmware are stored in step 1, pressing [FW Data Select] enables selection. (Data of other models cannot be selected.)**
  **(At this time, the data marked with an asterisk on the upper-left side of the data selection screen is the firmware data in the "FW0002" folder in the USB memory device.)**

5. Press the [Language Select].
6. On the Language Select screen, select a language to be displayed on the LCD area of the control panel, then touch [Fix].

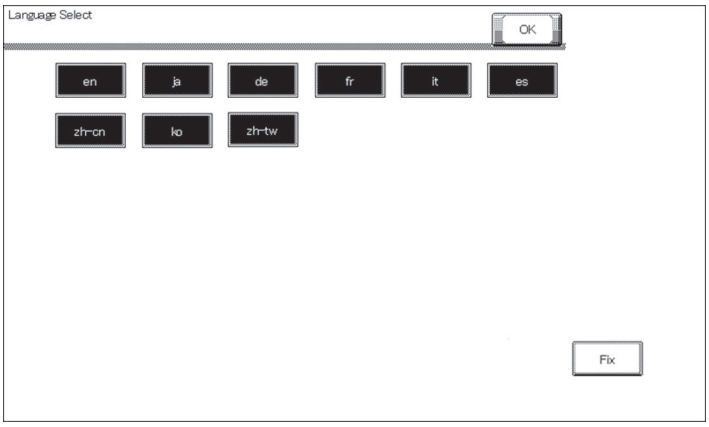


**NOTE**
- **The language selected on this screen is displayed on the Language Selection screen of Utility.**
- **Up to 9 languages are selectable. However, Japanese and English are essential options.**

7. Touch [OK] to go back to the firmware update selection screen.
8. Press the [START]. (At this time, the Start key starts blinking red.)
9. Check that the control panel shows the message indicating that the data has been rewritten correctly ([Downloading Completed]). (The Start key lights blue.)
10. Turn OFF the main power switch.
11. Remove the USB memory.
12. Turn ON the main power switch.
13. Call the Service Mode to the screen.
14. Select the [Firmware Version].
15. Make sure if the version of firmware is updated.

## 2.3 Action when data transfer fails

- If “NG” appears on the control panel, indicating that rewriting has been unsuccessful (in which case the Start key lights up red), take the following steps.
  1. Perform the data rewriting procedure again.
  2. If the procedure is abnormally terminated, change the USB memory for a new one and try another rewriting sequence.
  3. If the procedure is still abnormally terminated, change the board that has caused “NG” and carry out data rewriting procedure.

| F/W to be updated | Appropriate board | Remark |
|---|---|---|
| MFP CONTROLLER | eMMC board (eMMCB) | - |
| SCANNER/PRINTER | MFP board (MFPB) | - |
| FAX BOARD CONTROLLER1 | Fax board/1 (FAXB/1) | Only when FK-514 is mounted |
| FAX BOARD CONTROLLER2 | Fax board/2 (FAXB/2) | Only when FK-514 is mounted |
| FAX BOARD CONTROLLER3 | Fax board/3 (FAXB/3) | Only when FK-515 is mounted |
| FAX BOARD CONTROLLER4 | Fax board/4 (FAXB/4) | Only when FK-515 is mounted |
| ADF (DF-M) | DF control board (DFCB) | Only when DF-704/DF-629 is mounted |
| FINISHER | FS control board (FSCB) | Only when FS-533 or FS-534 is mounted |
| SD | SD drive board (SDDB) | Only when FS-534SD is mounted |
| DSC1 | DSC board/1 (DSCB/1) | Only when SC-508 is mounted |
| DSC2 | DSC board/2 (DSCB/2) | Only when SC-508 is mounted |

## 2.4 Entering the machine type information

- When MFP board is replaced, it is necessary to enter the machine type information.
- Refer to the following procedures to enter the machine type information.

Procedure
1. Insert the USB memory to the USB port.
2. Turn the main power switch ON while pressing the Stop key.
3. Touch [Machine Type Select].

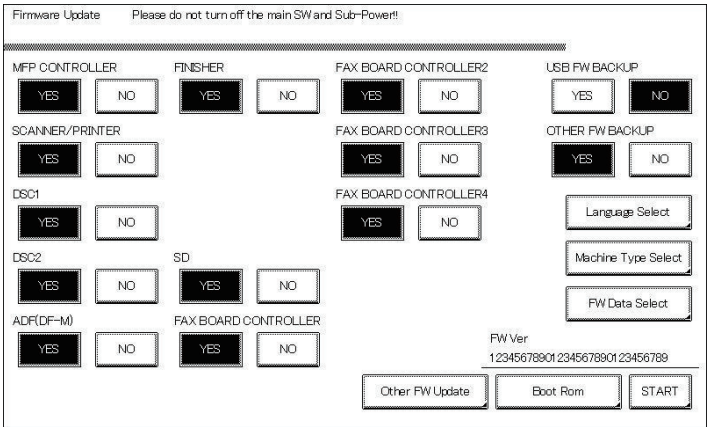


*4.* Enter [Machine] and [Type] information according to the following table. Then touch [Fix].

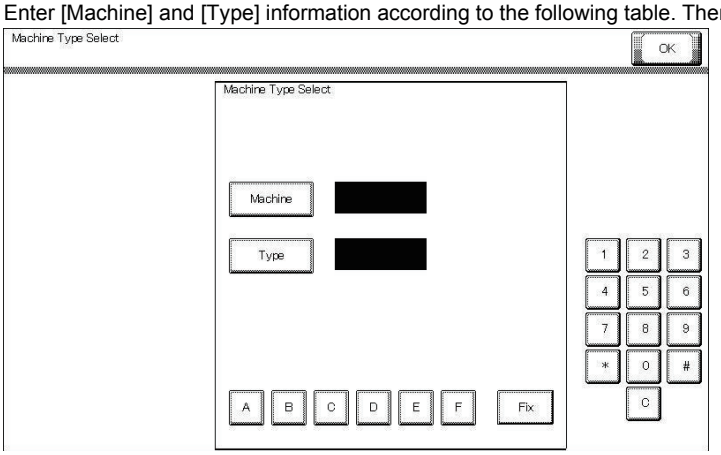


| First four digits of the serial number | A7PU | A7PY | A7R0 |
|---|---|---|---|
| [Machine] | 6 | 6 | 6 |
| [Type] | 1 | 2 | D |

*5.* Touch [OK], and turn OFF the main power switch.

# 3. Internet ISW

## 3.1 Preparations for firmware rewriting

### 3.1.1 Outline

- The "Internet ISW" is a system used by the main unit to retrieve firmware from a program server on the Internet and update the firmware.
- This executes when the command is received from the operation panel or CS Remote Care, or at a previously specified timing.

### 3.1.2 Service environment

The following conditions are necessary for using the Internet ISW function.

- The main body is connected to such a network environment that the firmware can be downloaded on the internet using the ftp or http protocol.

The “Internet ISW” will not operate under the following conditions.

- Main power switch is set to OFF.
- Sub power auto power off mode enabled.
- When [Administrator Settings] -> [Security Settings] -> [Enhanced Security Mode] is set to “ON”.
- Machine is operating, or there are jobs present (including appointed jobs).
- Machine is in idle with suspended job.
- Paper jam has occurred.
- Image file is in the memory.
- Model or the circuit board of the program does not match.

### 3.1.3 Preparations for firmware rewriting

- For using the Internet ISW, the network parameter, program server address as well as firewall address need to be set to the main body.
  I.5.31.1 Internet ISW - Internet ISW Set

#### (1) Internet ISW Set

1. Call the Service Mode to the screen.
2. Touch [Machine Update Setting] -> [Internet ISW] -> [Inernet ISW Set].

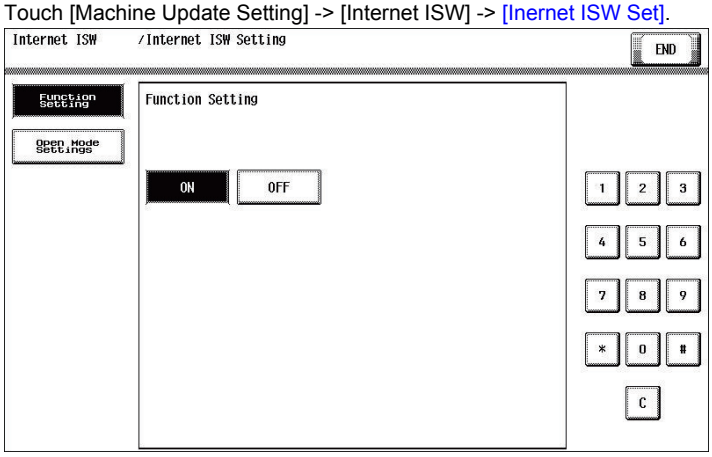


3. Select [ON] in [Function Setting], and touch [END].

**NOTE**

- **Settings such as server setting, etc. will be available by selecting “ON” on this setting.**
- **When [Administrator Settings] -> [Security Settings] -> [Enhanced Security Mode] is set to “ON”, “ON” cannot be selected on this setting.**
- **To allow the administrator to rewrite firmware, press [Open Mode Settings] and select [Set].**

#### (2) Protocol setting

- It performs the setting concerning the protocol (ftp or http) for connecting to the Internet ISW.

##### (a) Connecting by http

1. Select [Service Mode] -> [Machine Update Setting] -> [Internet ISW].
2. Data input setting
   - Touch [HTTP Setting], and select [ON].
3. Connection Time-Out
   - Select [Connection Time-Out], and set the time for the connection time out between 30 and 300 seconds.

**NOTE**

- **To connect MFP to the Internet via a proxy, the proxy server related settings must be configured in addition to [Forwarding Access Setting].**
  **The settings of the proxy used in Internet ISW communications is configured in [Administrator Settings] -> [Network Settings] -> [Machine Update Settings] -> [HTTP Proxy Settings].**

##### (b) Connecting by ftp

1. Select [Service Mode] -> [Machine Update Setting] -> [Internet ISW].
2. Data input setting
   - Touch [FTP Setting], and select [ON].
3. Connection Setting
   - Perform the setting for accessing FTP server.

1. Select [Port Number], and set the port number for FTP server from 1 through 65535.
2. Select [Connection Time Out], and set the time for the connection time out from 1 through 60.
3. When connecting in PASV mode, select [PASV Mode], and select [ON].

**NOTE**

- **PASV Mode:**
  **This mode is for transferring the file with FTP under the condition where communication is restricted such as inside the firewall. Since with PASV mode, the client with restriction sets the port number, data transmission port can be secured to enable the file transmission.**

**NOTE**

- **To connect MFP to the Internet via a proxy, the proxy server related settings must be configured in addition to [Forwarding Access Setting].**
  **The settings of the proxy used in Internet ISW communications is configured in [Administrator Settings] -> [Network Settings] -> [Machine Update Settings] -> [Internet ISW Settings] -> [FTP Server Settings].**

### (3) Forwarding Access Setting

- To make the access setting for the program server which stores the firmware data.

1. Select [Service Mode] -> [Machine Update Setting] -> [Internet ISW].
2. Touch [Forwarding Access Setting].

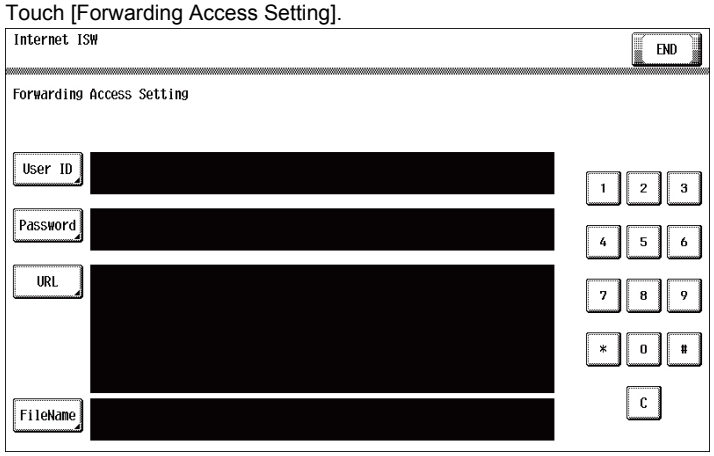


3. Select [User ID], and enter the user ID which is necessary for connecting to the program server on the on-screen keyboard, and touch [END].
4. Select [Password], and enter the password which is necessary for connecting to the program server on the on-screen keyboard, and touch [END].
5. Select [URL], and enter the directory which stores the program server address and the firmware on the on-screen keyboard by URL method, and touch [END].

**NOTE**

- **Enter the URL which matches to the protocol to be used.**

| | |
|---|---|
| **When connecting to http** | **http:///(host name or IP address)/directory name or https:///(host name or IP address)/directory name** |
| **When connecting to ftp** | **ftp:///(host name or IP address)/directory name** |

6. Select [File Name], and enter the file name of the firmware data to be downloaded on the on-screen keyboard, and touch [END].
7. Touch [OK] to finish setting.

### (4) Update Start Time Settings

Configure settings on the timing to update firmware.

1. Select [Service Mode] -> [Machine Update Setting] -> [Internet ISW].
2. Press [Update Start Time Settings].
3. Select either [Set] or [Unset].
4. If [Set] is selected, enter the time to update firmware on the ten-key.
5. Touch [END].

## 3.2 Making the firmware data

### 3.2.1 Outline

- It is necessary to convert the firmware data and save it in the target directory of the Internet ISW server for upgrading the firmware via Internet ISW.

### 3.2.2 Procedure

1. Uncompress the firmware file.
2. Drag and Drop the firmware folder [1] which is in the uncompressed folder into the batch file [2] (mktar_A7PU.bat) which is in the same folder.

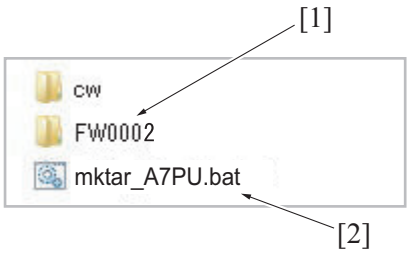


3. "making Emu3(A7PU)" message appears in the command prompt window.

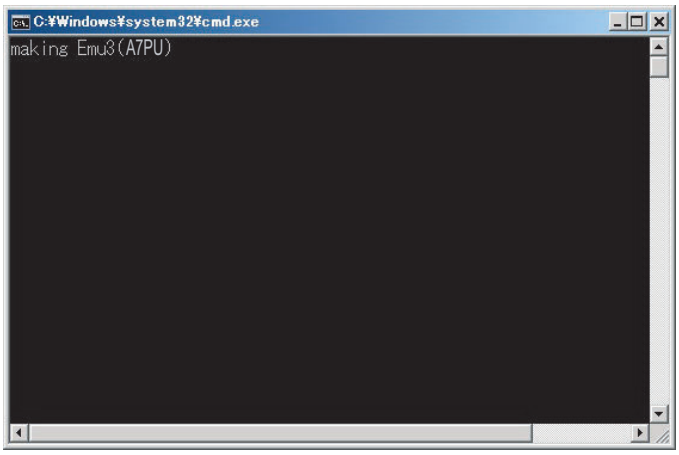


4. The command prompt window closed automatically.
5. "A7PUfw.tar" is created in the same directory.

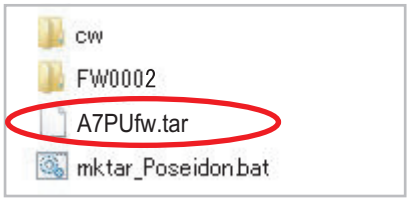


6. Copy the "A7PUfw.tar" in the firmware data directory of Internet ISW server.

## 3.3 Firmware rewriting from the control panel

### 3.3.1 Firmware rewriting from the control panel

**NOTE**

- **When performing the Internet ISW, ask the administrator for permission beforehand.**
- **DO NOT turn OFF the main power switch while downloading.**
- **When IP address of MFP is assigned by DHCP, the firmware rewriting will be failed by using [Download/Update] button. Use [Download] button in such case.**
- **The Static IP address of MFP is necessary to execute the firmware rewriting by CS Remote Care or PageScope Enterprise Suite remotely.**
- **Updates cannot be performed via the [Download/Update] button when connected over Wi-Fi. Use the [Download] button in such cases.**

#### (1) Conducting commands from the control panel

1. Touch [Service Mode] -> [Machine Update Setting] -> [Internet ISW] -> [Download].
2. To download and update firmware data, select [Download/Update].
   To only download firmware data and update it later, select [Download].
3. Touch [Start].




4. Main body accesses the server and starts downloading the firmware data.
5. To download and update firmware data, select the types of firmware data to be written and replaced with a newer version in the Firmware Update screen and press [START].

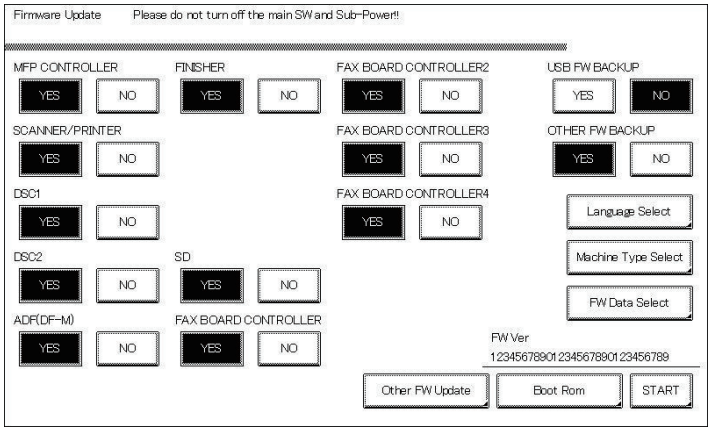


| F/W to be updated | Appropriate board | Remark |
|---|---|---|
| MFP CONTROLLER | eMMC board (eMMCB) | - |
| SCANNER/PRINTER | MFP board (MFPB) | - |
| FAX BOARD CONTROLLER1 | Fax board/1 (FAXB/1) | Only when FK-514 is mounted |
| FAX BOARD CONTROLLER2 | Fax board/2 (FAXB/2) | Only when FK-514 is mounted |
| FAX BOARD CONTROLLER3 | Fax board/3 (FAXB/3) | Only when FK-515 is mounted |
| FAX BOARD CONTROLLER4 | Fax board/4 (FAXB/4) | Only when FK-515 is mounted |
| ADF (DF-M) | DF control board (DFCB) | Only when DF-704/DF-629 is mounted |
| FINISHER | FS control board (FSCB) | Only when FS-533 or FS-534 is mounted |
| SD | SD drive board (SDDB) | Only when FS-534SD is mounted |
| DSC1 | DSC board/1 (DSCB/1) | Only when SC-508 is mounted |
| DSC2 | DSC board/2 (DSCB/2) | Only when SC-508 is mounted |

**NOTE**

- **Unless one of the keys on the control panel is pressed, firmware is updated after 30 seconds when the unit has restarted.**

### (2) During firmware updating

1. After pressing [Start], the main unit connects to the server and starts the download.
2. The message to indicate the status will be displayed on the screen while connecting or transferring data.

### (3) Completed or failed

#### (a) Firmware updated normally

1. When the Firmware is normally updated, restart the main body in auto or manual mode to display the outcome, and touch [OK] to return to the main screen.

#### (b) Failing to update the firmware due to the network trouble

1. When updating failed to complete due to the trouble on connecting to the network, an error code and the message will be displayed.
2. Restart the main body in auto or manual mode, and touch [OK]. It can be used with the firmware version before conducting updating.
3. Check the settings for the network by error codes, and try updating again.
   K.5.1 Error code list for the Internet ISW

#### (c) Failure to update firmware after starting the update process

1. Once firmware updating has started, the ROM in the main body will be deleted.

When it failed right after updating has started, restart the main body, and shift to the standby screen to retry downloading.

2. When updating on the control panel, touch [settings] on the standby screen, and check the Network settings again. Touch [Download], and restart the Internet ISW.

**NOTE**

- **Return to the standby screen without fail after turning the main power switch OFF/ON if the firmware is not updated.**
- **Firmware can be updated with the USB memory.**

# 4. CS Remote Care

## 4.1 Firmware rewriting from the CS Remote Care

- For detailed error information relating to CS Remote Care, refer to "I.5.7 CS Remote Care (Outlines)"
- For the firmware update procedure using CS Remote Care, refer to CS Remote Care Center Manual.

# 5. Auto Update setting

## 5.1 Outline

- "Auto Update" is the function, which makes the main body access the program server periodically through the network to obtain a new firmware, then rewrites it automatically.

## 5.2 Service environment

- The following conditions are necessary for using the Auto Update function.
- The main body is connected to such a network environment that the firmware can be downloaded on the network using the SMB or http protocol.
- The Auto Update function will not operate when the main body is under the following conditions.
  - Main power switch is set to OFF.
  - Sub power OFF mode (power key is orange) or ErP auto power OFF mode (power key flashes orange) enabled
  - When [Administrator Settings] -> [Security Settings] -> [Enhanced Security Mode] is set to "ON".
  - MFP is operating, or there are jobs present (including appointed jobs).
  - MFP is in idle with suspended job.
  - Trouble has occurred.
  - Image file is in the memory.
  - Model or the circuit board of the program does not match.

## 5.3 Procedures for rewriting the firmware by using the Auto Update function

### 5.3.1 Preparations

- For using this function effectively, before executing the following procedures contact with the administrator to obtain an agreement.
- For using the Auto Update function, the network parameter, program server address as well as firewall address need to be set to the main body.
- Create a firmware file used to the "Internet ISW" and store it in the program server.
- Create a program update information file (C_UpdateList.ini) and store a set of data (folder including the firmware file) for updating in the program server.

#### (1) Method for creating the program update information file (C_UpdateList.ini)

- Specify the firmware, loadable driver, configuration files, firmware rewriting method as shown below.
  **NOTE**
  - **[FirmWare], Version, FilePath, [LoadableDriver], NumberOfFiles, [Config], [QuickUpdate] and Update must be specified by using the capital letters and small letters properly.**
  - **The file path configured in FilePath describes the relative path from the program update information files.**

A sample of C_UpdateList.ini

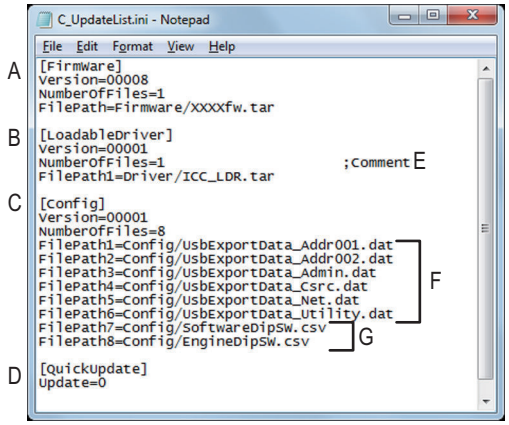


##### (a) A: Firmware updating information

- [FirmWare], Version, NumberOfFiles and FilePath are the necessary information.
- Change of version numbers (5-digit number) is to be recognized as that the file has been updated, and the file will be downloaded.
- Specify the number of files at NumberOfFiles. (If not to download, set "0")
- Enter the path and file name in FilePath to access the firmware file.

##### (b) B: Loadable driver updating information

- [LoadableDriver], Version, and NumberOfFiles are the necessary information.
- Change of version numbers (5-digit number) is to be recognized as that the file has been updated, and the file will be downloaded.
- Specify the number of files at NumberOfFiles. (If not to download, set "0")
- Enter the path and file name in FilePath to access the Loadable Driver file.

##### (c) C: Configuration files updating information

- [Config], Version, and NumberOfFiles are the necessary information.
- Change of version numbers (5-digit number) is to be recognized as that the file has been updated, and the file will be downloaded.
- Specify the number of files at NumberOfFiles. (If not to download, set "0")
- Enter the path and file name in FilePath to access the Configuration file(s).

- If multiple files exist, give a number to each of them as FilePath1, FilePath2 as shown in above illustration.

### (d) D: Timing for updating data

- [QuickUpdate] and Update are the necessary information.
- If Update is set to "0", the downloaded firmware and each setting will be rewritten in accordance with the update time settings.
- If Update is set to "1", the firmware and each setting will be rewritten soon after downloading.

### (e) E: Comment

- A comment can be inserted between "#" or ";" and the line break code.

### (f) F: Create a configuration file

1. Select [Service Mode] -> [Machine Update Setting] -> [Machine Auto Update setting] -> [Machine Export setting].
2. Insert a USB memory into the USB port.
3. Enter a password.
4. Select [START].
5. "Result OK" will be displayed.
6. Complete the data export.

**NOTE**

- **On the MFP where a file is to be downloaded, the password specified at above step 3 must be set beforehand by selecting [Service Mode] -> [Machine Update Setting] -> [Machine Auto Update setting] -> [Machine Update Password].**

### (g) G: Copy of Software switch setting and Engine FW DipSW setting

- Create CSV files for the data with the required switch number as SoftwareDipSW.csv and EngineDipSW.csv.

A sample of SoftwareDipSW.csv

| | A | B | C |
|---|---|---|---|
| 1 | 69 | 00000001 | 00000001 |
| 2 | 188 | 00000011 | 00000011 |
| 3 | | | |

| | |
|---|---|
| A row | Software switch number |
| B row | Set 1 on the bit to be overwritten (bit7 to bit0 from left side) |
| C row | Set 1 or 0 for new setting at selected bit(s) on B row. (bit7 to bit0 from left side) |

A sample of EngineDipSW.csv

| | A | B |
|---|---|---|
| 1 | 5 | 0 |
| 2 | 11 | 1 |
| 3 | 13 | 0 |
| 4 | | |

| | |
|---|---|
| A row | Engine FW DipSW number |
| B row | 0 (not select) or 1 (select) |

## (2) Configuration of files and folders

- The folder configuration of the sample of C_UpdateList.ini in above (1) is as shown below.

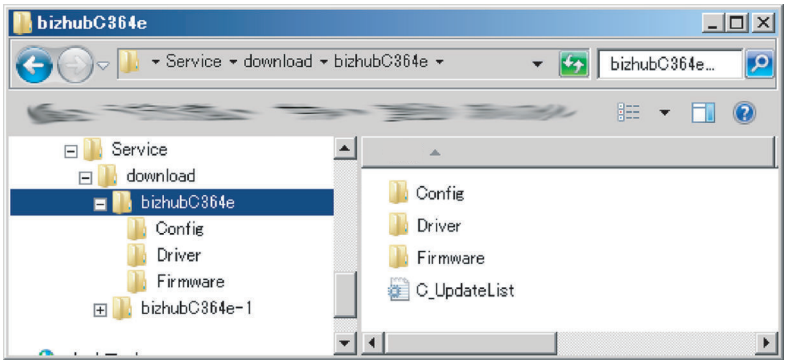

### 5.3.2 Download the firmware data automatically from the program server

1. Select [Service Mode] -> [Machine Update Setting] -> [Machine Auto Update setting] -> [Auto Update setting].
2. Select either [Server 1 settings] or [Server 2 settings] as the connection to configure.
3. Touch [Auto Update], then select [ON].
4. Select [Download Protocol], then select [SMB Setting] or [HTTP Setting]. The HTTP protocol is the only available option for [Server 2 settings].
5. Enter the information for accessing the program server on the setting screen of the selected protocol. At this time, specify the folder in which C_UpdateList.ini is stored at where to be accessed.
6. Touch [END].
7. Touch [Common Settings].
8. Set [Update Time].
9. Set [Polling Interval].
10. Set [Repeat Interval].

- See items in I.11.28.7 Machine Auto Update setting - Auto Update setting for details of each setting.
- The MFP confirms the program update information file in the program server with an interval set at [Polling Interval].
- The MFP compares the program update information file in the program server with that in the MFP, and starts downloading the firmware with a changed Version number.
- The downloaded firmware is to be stored in a HDD.
- To use the relay server function of the MFP, select [HTTP].

#### (1) Firmware Update

- Methods for updating the firmware are shown below.

**NOTE**

- **The host name is specified with its IP address.**
- **When the SMB protocol is used, the MFP uses static IP addresses.**

##### (a) To update the downloaded firmware automatically.

- If the MFP power is set to ON at the time set with [Service Mode] -> [Machine Update Setting] -> [Machine Auto Update setting] -> [Auto Update setting] -> [Common Settings] -> [Update time] , the firmware will be rewritten automatically. If the power is set to OFF at that time, no rewriting will be executed.

##### (b) Update the downloaded firmware using the control panel.

- Select [Service Mode] -> [Machine Update Setting] -> [Machine Auto Update setting] -> [Manually Update] -> [Start], then execute rewriting.

**NOTE**

**Do not set the power to OFF under the following state.**

- **It takes about 45 seconds from touching [Manually Update] -> [Start] to the next operation of the MFP (Auto Power OFF).**
- **About one minute after the download completed screen being displayed, the MFP will restart.**
- **When rewriting configuration files followed by the firmware, the MFP will restart again.**

#### (2) Error code

- The error code can be displayed using [Service Mode] -> [Machine Update Setting] -> [Machine Auto Update setting] -> [Update Log Display], or viewed on the PC where the log which saves up to 100 records sent by using [Transmission log Update] is received.

When using the SMB protocol:

| Error code | Cause of error | Countermeasure |
|---|---|---|
| N00107 | • Cannot access the SMB server | • Set the IP address of the server or the server name correctly.<br>• Confirm that if the server runs normally. |
| N04096 | | |
| N04097 | • Authentication error | • Set the ID and the password correctly. |
| N04098 | | |
| N04105 | • SMB connection error | • Check the SMB connection setting again. |
| N04106 | • Cannot obtain C_UpdateList.ini<br>• Cannot find the data described in C_UpdateList.ini | • Confirm that if C_UpdateList.ini is stored in the server, and set the file path for accessing C_UpdateList.ini correctly.<br>• Set the folder name and the file path correctly. |

When using the HTTP protocol:

| Error code | Cause of error | Countermeasure |
|---|---|---|
| N00107 | • Cannot access the HTTp server | • Set the IP address of the server or the server name correctly.<br>• Confirm that if the server runs normally. |
| N00401 | • Authentication error | • Set the ID and the password correctly. |
| N00404 | • Cannot obtain C_UpdateList.ini<br>• Cannot find the data described in C_UpdateList.ini | • Confirm that if C_UpdateList.ini is stored in the server, and set the file path for accessing C_UpdateList.ini correctly.<br>• Set the folder name and the file path correctly. |

Common in all cases

| Error code | Cause of error | Countermeasure |
|---|---|---|
| C00000 | • XML setting error | • Make sure that the settings in each configuration file are correct. |
| C00001 | • Decryption error | • Set the decryption password for the configuration files correctly. |
| D00001 | • Format related error (software SW) | • Check for errors in the SoftwareDipSW.csv file. |
| D00010 | • DipSW number not defined (software SW) | |

| | | |
|---|---|---|
| D10001 | • Format related error (Engine DipSW) | • Check for errors in the EngineDipSW.csv file. |
| D10010 | • DipSW number not defined (Engine DipSW) | |
| F00000 | • Firmware update error | • Check to see if the file on the server is correct. |
| F10107 | • The file is not the firmware file | • Check to see if the file on the server is correct. |
| F10109 | | |
| N00100 | • Network communication error | • Check the connection to the network cable and communications settings. |
| N00110 | | |
| T10001 | • The C_UpdateList. data has not been properly downloaded<br>• The C_UpdateList. data is corrupted | • Download the file again.<br>• Check to see if the file on the server is correct. |
| T10010 | • Descriptions in C_UpdateList.ini are not correct | • Set the descriptions in C_UpdateList.ini correctly. |
| T10020 | | |

# 6. Firmware Distribute Server function (Relay server)

## 6.1 Outline

- “Relay Server” is the function, which shares the firmware files (relay data) obtained from the network with the other MFP, and works as the program server of the firmware “Auto Update” function.

**NOTE**

- **This function is disabled when the Marketing Area of the service mode is set to US or Others5.**

## 6.2 Service environment

- The following conditions are necessary for using the relay server function.
- The main body is connected to such a network environment that the firmware can be downloaded on the network using the http protocol.
- The relay server function will not operate under the following conditions.
  - Main power switch is set to OFF.
  - Sub power auto OFF mode (power key is orange) or ErP auto power OFF mode (power key flashes orange) enabled
  - When [Administrator Settings] -> [Security Settings] -> [Enhanced Security Mode] is set to “ON”.

## 6.3 Firmware relay procedures by using “relay server function”

### 6.3.1 Preparations

- When using this function effectively, ask the administrator for permission beforehand.
- For using the Relay Server function, the network parameter, program server address as well as firewall address need to be set to the main body.
- Create a firmware file used to the "Internet ISW" and store it in the program server.
- Create one set of data used to the auto update function as the relay data, and store it in the program server. (Refer to J.5. Auto Update setting for more information.)
- Create a data update information file (S_UpdateList.csv) and store up to four folders (four types) of data set in the program server for managing the relay data saved on one relay server machine.

#### (1) Methods for creating the data update information file (S_UpdateList.csv)

- To create a CSV file by specifying the model name, data update date and time, and path for accessing the firmware folder used to the Auto Update function as shown below. The data with changed date and time will be downloaded. Specify up to four (four types) folders of relay data set.

A sample of S_UpdateList.csv

| | A | B | C |
|---|---|---|---|
| 1 | bizhubC368 Standard | 2015/03/02 00:10:03 | download/bizhubC368 |
| 2 | bizhubC368 Customer1 | 2015/03/02 00:10:03 | download/bizhubC368-1 |

| | |
|---|---|
| A row | Model name (any character string) |
| B row | Data update date and time |
| C row | Path for accessing the firmware folder used to the Auto Update function |

#### (2) Configuration of files and folders

- The folder configuration of the sample of S_UpdateList.csv in above (1) is as shown below.

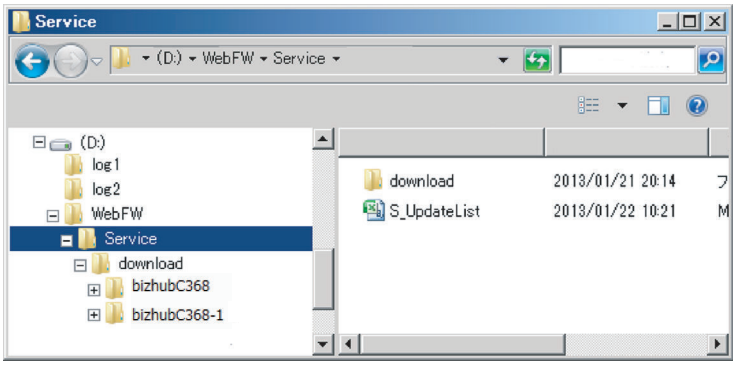


### 6.3.2 Download and open the relay data automatically from the program server

1. Select [Service Mode] -> [Machine Update Setting] -> [Machine Auto Update setting] -> [Relay server setting].
2. Touch [Update File Download], then select [ON].
3. Select [Obtain Setting File].
4. Enter the information to access the program server on the setting screen. At this time, specify the folder on URL, in which S_UpdateList.csv is stored.
5. Set [Polling Interval].
6. Set [Repeat Interval].

7. Select [Distribution Server (HTTP)], then select [ON].
8. Set the information for accessing the distribution server.

**NOTE**

- **Do not use [SMB Authentication].**
- **The MFP confirms the data update information file in the program server with an interval set at [Polling Interval].**
- **The MFP compares the data update information file in the program server with that in the MFP, and starts downloading the relay data with a changed update date and time.**
- **The downloaded relay data is to be stored in a HDD.**

### (1) Error code

- The error code can be displayed using [Service Mode] -> [Machine Update Setting] -> [Machine Auto Update setting] -> [Relay Server Log Confirmation], or viewed on the PC where the log which saves up to 100 records sent by using [Transmission Server Log] is received.

| Error code | Cause of error | Countermeasure |
|---|---|---|
| N00107 | • Cannot access the HTTp server | • Set the IP address of the server or the server name correctly.<br>• Confirm that if the server runs normally. |
| N00401 | • Authentication error | • Set the ID and the password correctly. |
| N00404 | • Cannot obtain S_UpdateList.csv<br>• Cannot find the data described in S_UpdateList.csv | • Confirm that if S_UpdateList.csv is stored in the server, and set the file path for accessing S_UpdateList.csv correctly.<br>• Set the folder name and the file path correctly. |

## 6.3.3 Download the firmware opened from the relay server by using the Auto Update function on the other MFP

- The following settings is to be configured on the MFPs other than the relay server, and the models corresponding to the relayed data.

1. Select [Service Mode] -> [Machine Update Setting] -> [Machine Auto Update setting] -> [Auto Update setting].
2. Select either [Server 1 settings] or [Server 2 settings] as the connection to configure.
3. Touch [Auto Update], then select [ON].
4. Select [Download Protocol], then select [HTTP] according to the settings of [Distribution Server] for the relay server.
5. Enter the information for accessing the relay server on the setting screen of the HTTP setting.
   At this time, specify the folder*1 in which C_UpdateList.ini is stored at where to be accessed.
6. Touch [END].
7. Touch [Common Settings].
8. Set [Update Time].
9. Set [Polling Interval].
10. Set [Repeat Interval].

*1: The file path in which a file is stored shall be set as shown below.
In [URL], "http://IP address or host name of the MFP working as relay server/DAV/Service/download/bizhubC368" (sample shown in 5.3.1.(1)).
In the file path on [URL], the capital letters and small letters are distinguished, then enter the part from "/DAV/Service/" as described in the row C of S_UpdateList.csv.
If activate the relay server function in Administrator settings, the file path will be changed as "/DAV/Admin/".

# 7. How to install the i-Option data

## 7.1 Available function for i-Option

| i-Option | Functions | Data location | How to recover when replacing or formatting HDD |
|---|---|---|---|
| LK-102 v3 | PDF processing | In the Standard firmware | I.5.16.23 Install Data |
| LK-104 v3 | Voice guidance | In the Standard firmware | |
| LK-105 v4 | Searchable PDF | In the Standard firmware | |
| LK-106 | Barcode font | In the Standard firmware | n/a |
| LK-107 | Unicode font | In the Standard firmware | J.7.2 LK-107/LK-108 font data installation procedure |
| LK-108 | OCR font | In the Standard firmware | |
| LK-110 v2 | High functional Image Processing | In the Standard firmware | I.5.16.23 Install Data |
| LK-111 | Enhancing external linkage (supported by ThinPrint) | In the Standard firmware | n/a |
| LK-114 | Ubiquitous Printing | In the Standard firmware | |
| LK-115 v2* | TPM (Trusted Platform Module) | In the Standard firmware | |

- *: This function is to be soon mounted.

## 7.2 LK-107/LK-108 font data installation procedure

1. Prepare an USB memory.
2. Copy the font data to the root directory of the USB memory.
   - OCR font: download_OCRA-0.pdf
   - Unicode font: download_Andale_J-0.pdf, download_Andale_K-0.pdf, download_Andale_S-0.pdf, download_Andale_T-0.pdf
3. Turn ON the main power switch, and connect the USB memory to the USB port on the side of the control panel.
4. The message “Print a document from External Memory” will be displayed on the control panel, and select it.
5. The font data in the USB memory will be displayed, and select these data to print out.
6. The message “Document Printing Failed” will be displayed, and touch [OK].
7. Print out a PCL font list, and confirm that the font data are registered as following names.
   - LK-107: Andale Mono WT J, Andale Mono WT K, Andale Mono WT S, Andale Mono WT T
   - LK-108: OCR-A

# 8. Creating back up files when updating firmware

- Enable backup to backup the installed firmware before updating.
- This enables you to restore the backed up firmware (rollback) if an error occurs when updating the firmware.
- When updating to a newer version of firmware, the firmware before backing up can be stored on a HDD.
- If a backed up file already exists in the HDD, the older version will be deleted and the firmware before updating will be stored.
- To roll back the firmware, select [Service Mode] -> [Machine Update Settings] -> [Firmware Rollback].

## 8.1 Procedure

1. The firmware update screen is displayed when updating the firmware.
2. Select [USB FW BACKUP] and [OTHER FW BACKUP] in the firmware update selection screen.
   - [USB FW BACKUP] : Select to execute backup when updating the firmware on the USB flash memory.
   - [OTHER FW BACKUP]: Select to execute backup when updating the firmware by non-USB Internet ISW or automatic update feature.

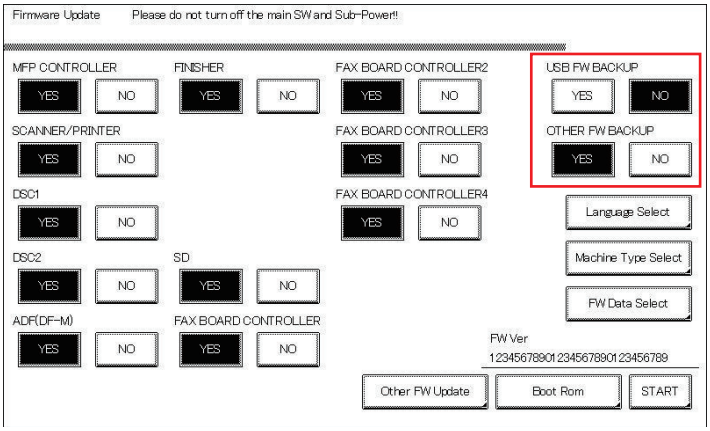


3. Update the firmware.

**NOTE**

- **The update process takes a few more minutes when creating a backup than when not creating a backup.**

# K TROUBLESHOOTING

## 1. JAM CODE

### (1) JAM display

- When the paper jam occurred, the message, the position jam occurred (number blinks), position of the remaining paper (number lights up), and the JAM code are displayed.

**NOTE**

- **JAM code is displayed on the jam warning screen only when [Service Mode] -> [System 2] -> [JAM Code Display Setting] is set to "Display."**

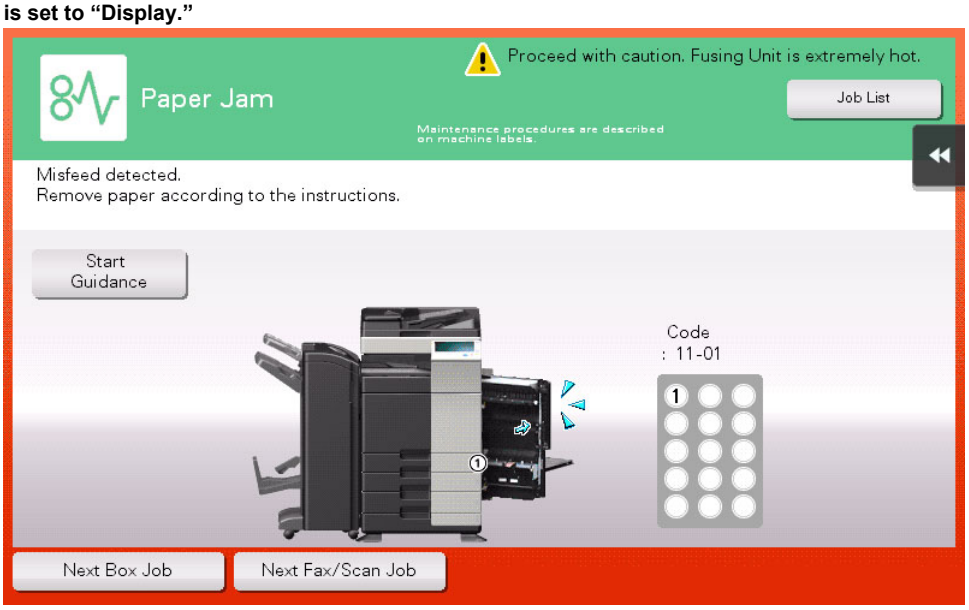


### (2) Misfeed display resetting procedure

1. Open the corresponding door, clear the sheet of paper misfed, and close the door.
2. Touch "OK" displayed on the touch panel.

### 1.1 List of the JAM code

| JAM code | JAM type |
|---|---|
| 10-01 | Misfeed at manual bypass feed section |
| 10-02 | |
| 10-40 | |
| 11-01 | Misfeed at tray 1 feed section |
| 11-02 | |
| 11-40 | |
| 12-01 | Misfeed at tray 2 feed section |
| 12-40 | |
| 13-01 | Misfeed at tray 3 feed section |
| 13-40 | |
| 14-01 | Misfeed at tray 4 feed section |
| 14-40 | |
| 15-01 | Misfeed at LCT paper feed section |
| 15-40 | |
| 16-01 | Misfeed at LCC feed/transport section |
| 16-40 | |
| 17-20 | Misfeed at LCT transport section |
| 20-01 | Misfeed at vertical transport section |
| 20-02 | |
| 20-21 | |
| 20-22 | |
| 30-03 | Misfeed at 2nd transfer section |
| 32-01 | Misfeed at exit section |
| 32-05 | |
| 66-01 | Misfeed at DF turnover section <When DF-629 is installed> |
| 66-11 | |
| 66-21 | |

| JAM code | JAM type |
|---|---|
| 66-02 | Misfeed at DF paper feed section <When DF-629 or DF-704 is installed> |
| 66-12 | |
| 66-03 | Misfeed at DF transport section <When DF-629 or DF-704 is installed> |
| 66-13 | |
| 66-23 | |
| 66-33 | |
| 66-04 | Misfeed at DF paper exit section <When DF-629 or DF-704 is installed> |
| 66-14 | |
| 66-24 | Misfeed at DF paper exit section <When DF-629 is installed> |
| 66-34 | |
| 66-05 | Misfeed at DF image reading section <When DF-629 or DF-704 is installed> |
| 66-06 | |
| 66-15 | Misfeed at DF image reading section <When DF-629 is installed> |
| 66-07 | Misfeed at DF paper feed/transport/image reading/turnover/paper exit section <When DF-629 or DF-704 is installed> |
| 72-14 | Misfeed at FS transport section <When FS-534 or FS-534SD is installed> |
| 72-15 | Misfeed at FS transport section <When FS-534 or FS-534SD is installed> |
| 72-16 | Misfeed at FS transport section <When FS-534, FS-534SD, FS-533 or FS-533+PK-519 is installed> |
| 72-17 | Misfeed at FS transport section <When FS-534, FS-534SD or FS-533 is installed> |
| 72-18 | Misfeed at FS transport section <When FS-534 or FS-534SD is installed> |
| 72-19 | Misfeed at FS transport section <When FS-534 or FS-534SD is installed> |
| 72-21 | Misfeed at FS transport section <When FS-534, FS-534SD or FS-533 is installed> |
| 72-22 | Misfeed at FS transport section <When FS-534 or FS-534SD is installed> |
| 72-23 | Misfeed at FS transport section <When FS-534 or FS-534SD is installed> |
| 72-25 | Misfeed at SD paper exit section <When FS-534SD is installed> |
| 72-26 | Misfeed at SD paper exit section <When FS-534SD is installed> |
| 72-43 | Misfeed at PK JAM <When FS-534+PK-520, FS-534SD+PK-520 or FS-533+PK-519 is installed> |
| 72-70 | Misfeed at PK JAM <When FS-533+PK-519 is installed> |
| 72-81 | Misfeed at FS staple section <When FS-533 is installed> |
| 72-85 | Misfeed at SD transport section <When FS-534SD is installed> |
| 72-86 | Misfeed at SD transport section <When FS-534SD is installed> |
| 72-87 | Misfeed at SD transport section <When FS-534SD is installed> |
| 75-42 | Misfeed at RU section <When FS-534 or FS-534SD is installed> |
| 75-43 | Misfeed at RU section <When FS-534 or FS-534SD is installed> |
| 92-01 | Misfeed at duplex pre-registration section |
| 92-02 | |
| 92-40 | |
| 93-10 | Misfeed at duplex transport section |
| 99-01 | Controller JAM (paper size error) |
| 99-02 | Controller JAM (controller forced stop command) |
| 99-03 | Controller JAM (image processing) |
| 99-04 | Controller JAM (finisher pre-drive is not completed) |
| 99-05 | Controller JAM (main body not starting a job) |
| 99-06 | Controller JAM (finisher internal processing error) |
| 99-07 | Controller JAM (main body not completing a job) |
| 99-08 | Controller JAM (finisher not starting a job) |
| 99-09 | Controller JAM (finisher not completing a job) |

## 1.2 JAM that do not display the JAM code

| JAM type | JAM detection timing | Ref. page |
|---|---|---|
| Misfeed at tray 2 feed section | Paper jam of a sheet of paper left at the tray 2 feed section results, if the tray 2 vertical transport sensor (PS19) is turned ON when the main power switch is turned ON, a door is opened and closed, or a misfeed or malfunction is reset. | K.1.6.3 12-01, 12-40 |
| | Paper jam of a sheet of paper left at the tray 2 feed section results, if a sheet of paper is determined to exist at a position detected when the main power switch is turned ON, a door is opened and closed, or a misfeed or malfunction is reset. | |
| Misfeed at tray 3 feed section | Paper jam of a sheet of paper left at the tray 3 feed section results, if the tray 3 vertical transport sensor (PS113) is turned ON when the main power switch | K.1.6.4 13-01, 13-40 |

| JAM type | JAM detection timing | Ref. page |
|---|---|---|
| | is turned ON, a door is opened and closed, or a misfeed or malfunction is reset. | |
| | Paper jam of a sheet of paper left at the tray 3 feed section results, if a sheet of paper is determined to exist at a position detected when the main power switch is turned ON, a door is opened and closed, or a misfeed or malfunction is reset. | |
| Misfeed at tray 4 feed section | Paper jam of a sheet of paper left at the tray 4 feed section results, if the tray 4 vertical transport sensor (PS123) is turned ON when the main power switch is turned ON, a door is opened and closed, or a misfeed or malfunction is reset. | K.1.6.5 14-01, 14-40 |
| | Paper jam of a sheet of paper left at the tray 4 feed section results, if a sheet of paper is determined to exist at a position detected when the main power switch is turned ON, a door is opened and closed, or a misfeed or malfunction is reset. | |
| Misfeed at LCT paper feed section | Paper jam of a sheet of paper left at the LCT feed section results, if the paper feed sensor (PS3) is turned ON when the main power switch is turned ON, a door is opened and closed, or a misfeed or malfunction is reset. | K.1.6.6 15-01, 15-40 |
| | Paper jam of a sheet of paper left at the LCT feed section results, if a sheet of paper is determined to exist at a position detected when the main power switch is turned ON, a door is opened and closed, or a misfeed or malfunction is reset. | |
| Misfeed at LCC feed/ transport section | Paper jam of a sheet of paper left at the LCC transport section results, if the vertical transport sensor (PS133) is turned ON when the main power switch is turned ON, a door is opened and closed, or a misfeed or malfunction is reset. | K.1.6.7 16-01, 16-40 |
| | Paper jam of a sheet of paper left at the LCC transport section results, if a sheet of paper is determined to exist at a position detected when the main power switch is turned ON, a door is opened and closed, or a misfeed or malfunction is reset. | |
| Misfeed at LCT transport section | Paper jam of a sheet of paper left at the LCT transport results, if a sheet of paper is determined to exist at a position detected when the main power switch is turned ON, a door is opened and closed, or a misfeed or malfunction is reset. | K.1.6.8 17-20 |
| Misfeed at vertical transport section | Paper jam of a sheet of paper left at the vertical transport section results, if a sheet of paper is determined to exist at a position detected when the main power switch is turned ON, a door is opened and closed, or a misfeed or malfunction is reset. | K.1.7.2 20-21<br>K.1.7.3 20-22 |
| Misfeed at 2nd transfer section | Paper jam of a sheet of paper left at the 2nd transfer section results, if the registration sensor (PS1) is turned ON (unblocked) when the main power switch is turned ON, a door is opened and closed, or a misfeed or malfunction is reset. | K.1.8.1 30-03 |
| | Paper jam of a sheet of paper left at the 2nd transfer section results, if a sheet of paper is determined to exist at a position detected when the main power switch is turned ON, a door is opened and closed, or a misfeed or malfunction is reset. | |
| Misfeed at exit section | Paper jam of a sheet of paper left at the exit section results, if the paper exit sensor (PS3) is turned ON (unblocked) when the main power switch is turned ON, a door is opened and closed, or a misfeed or malfunction is reset. | K.1.8.2 32-01, 32-05 |
| | Paper jam of a sheet of paper left at the exit section results, if a sheet of paper is determined to exist at a position detected when the main power switch is turned ON, a door is opened and closed, or a misfeed or malfunction is reset. | |
| Misfeed at duplex pre-registration section | Paper jam of a sheet of paper left at the duplex pre-registration section results, if a sheet of paper is determined to exist at a position detected when the main power switch is turned ON, a door is opened and closed, or a misfeed or malfunction is reset. | K.1.11.1 92-01, 92-02, 92-40 |
| Misfeed at duplex transport section | Paper jam of a sheet of paper left at the duplex transport section results, if the ADU paper passage sensor/1 (PS40) is turned ON (unblocked) or the ADU paper passage sensor/2 (PS41) is turned ON (blocked) when the main power switch is turned ON, a door is opened and closed, or a misfeed or malfunction is reset. | K.1.11.2 93-10 |
| | Paper jam of a sheet of paper left at the duplex transport section results, if a sheet of paper is determined to exist at a position detected when the main power switch is turned ON, a door is opened and closed, or a misfeed or malfunction is reset. | |

## 1.3 Sensor layout

### 1.3.1 bizhub C368/C308/C258

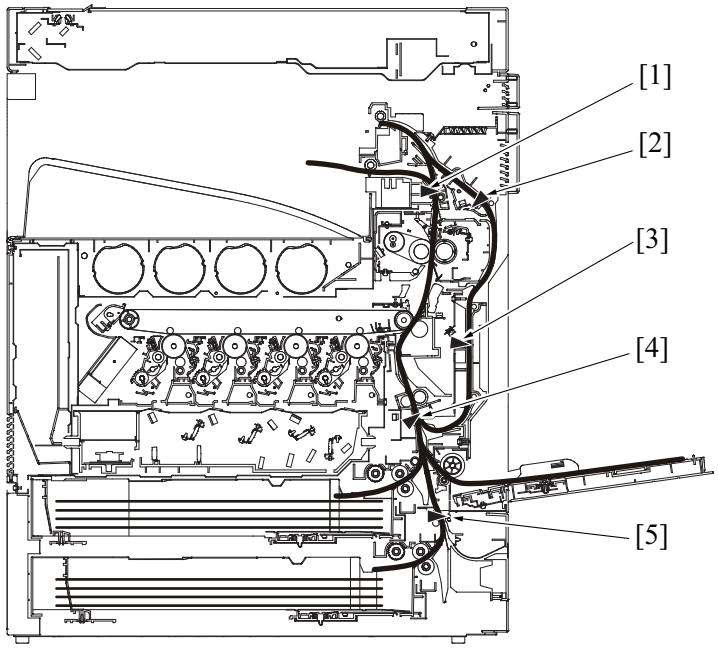


| | | | |
|---|---|---|---|
| [1] | Paper exit sensor (PS3) | [2] | ADU paper passage sensor/1 (PS40) |
| [3] | ADU paper passage sensor/2 (PS41) | [4] | Registration sensor (PS1) |
| [5] | Tray 2 vertical transport sensor (PS19) | - | - |

### 1.3.2 DF-629

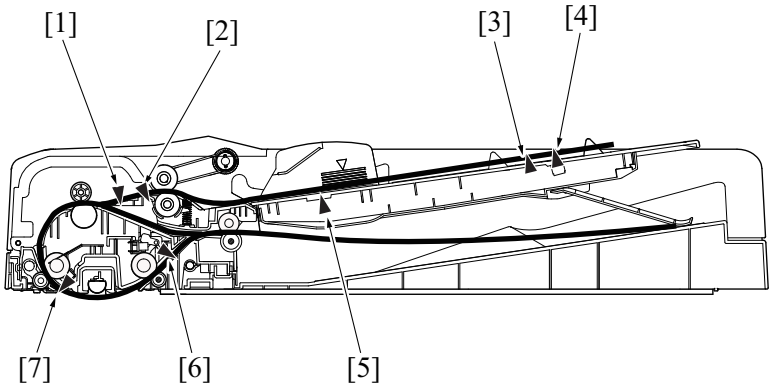


| | | | |
|---|---|---|---|
| [1] | Document registration sensor (PS3) | [2] | After separate sensor (PS2) |
| [3] | Document length size sensor/1 (PS6) | [4] | Document length size sensor/2 (PS7) |
| [5] | Document width size sensor (VR1) | [6] | Document exit sensor (PS5) |
| [7] | Document reading sensor (PS4) | - | - |

### 1.3.3 DF-704

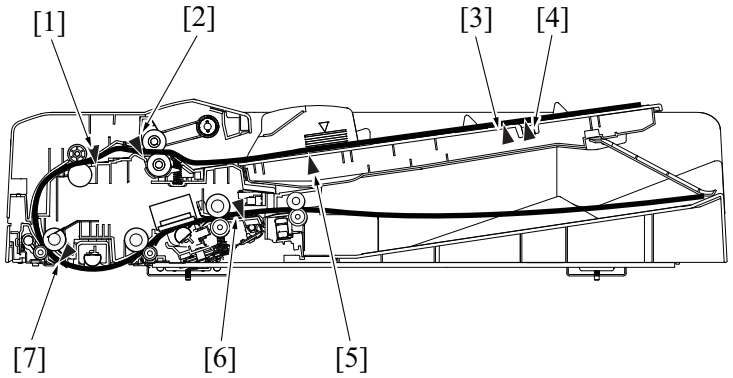


| | | | |
|---|---|---|---|
| [1] | Registration sensor (PS3) | [2] | After separate sensor (PS2) |
| [3] | Document length sensor/1 (PS8) | [4] | Document length sensor/2 (PS9) |
| [5] | Document width size sensor (VR1) | [6] | Document exit sensor (PS5) |
| [7] | Document reading sensor (PS6) | - | - |

### 1.3.4 PC-110/PC-210

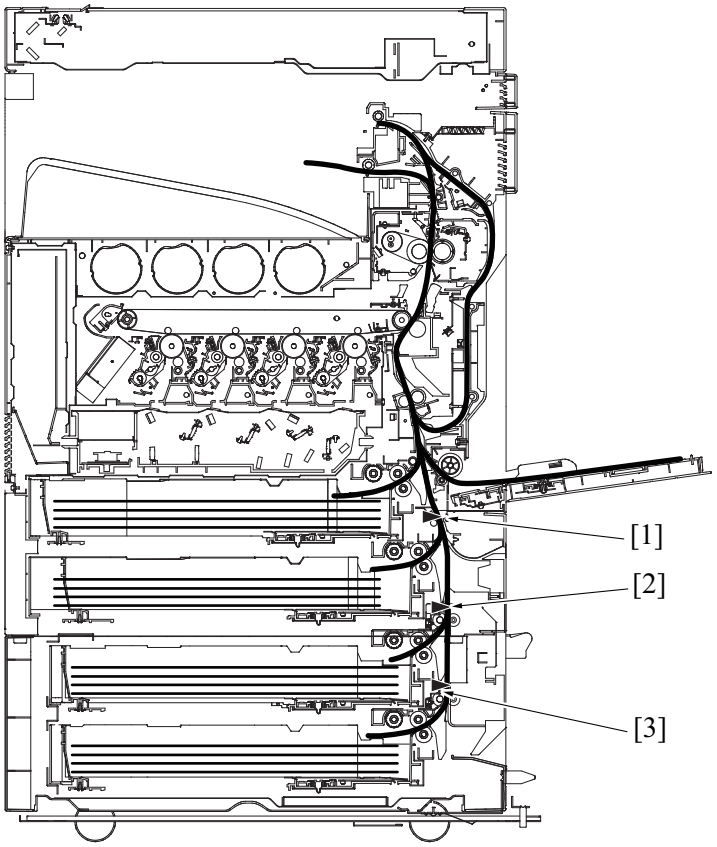


| | | | |
|---|---|---|---|
| [1] | Tray 2 vertical transport sensor (PS19): Main body | [2] | Tray 3 vertical transport sensor (PS113) |
| [3] | Tray 4 vertical transport sensor (PS123) | - | - |

### 1.3.5 PC-410

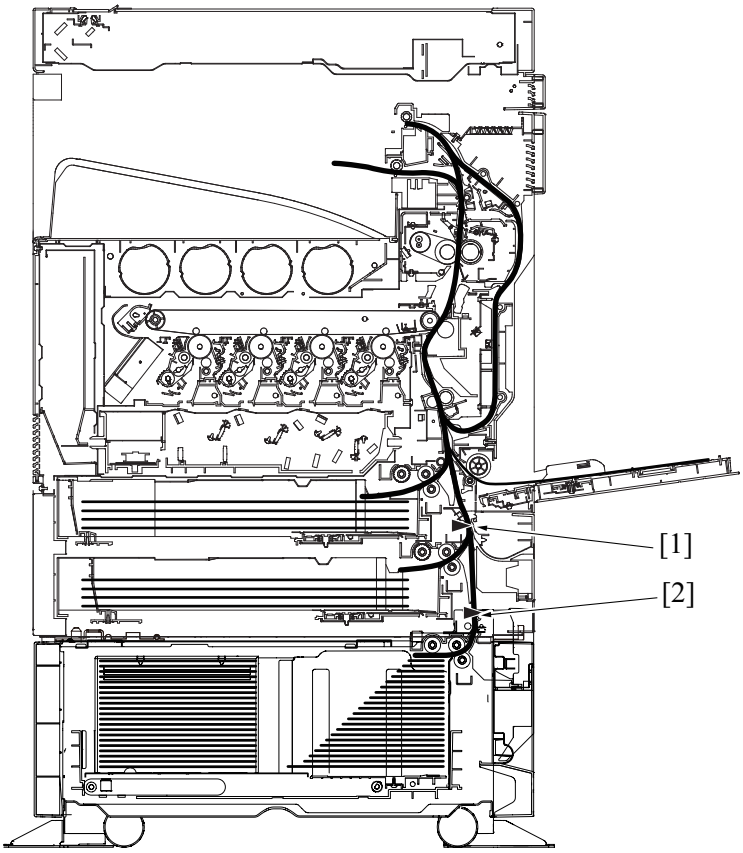


| | | | |
|---|---|---|---|
| [1] | Tray 2 vertical transport sensor (PS19): Main body | [2] | Vertical transport sensor (PS133) |

### 1.3.6 LU-302

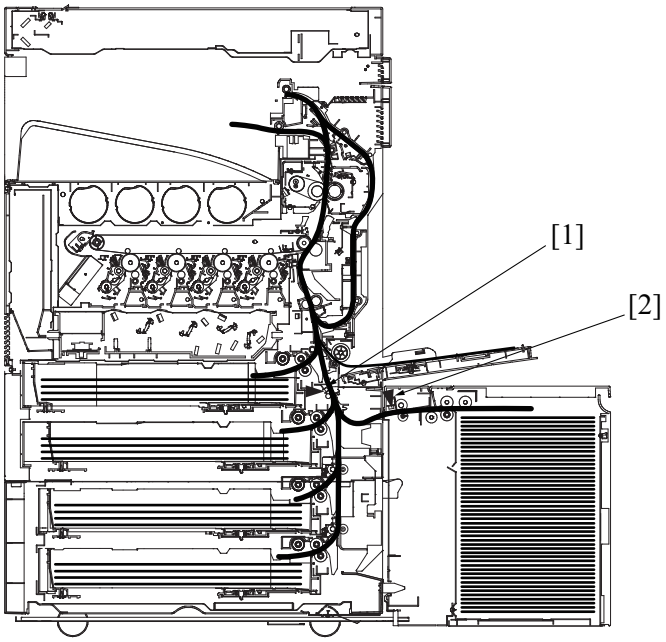


| | | | |
|---|---|---|---|
| [1] | Tray 2 vertical transport sensor (PS19): Main body | [2] | Paper feed sensor (PS3) |

### 1.3.7 FS-533/PK-519

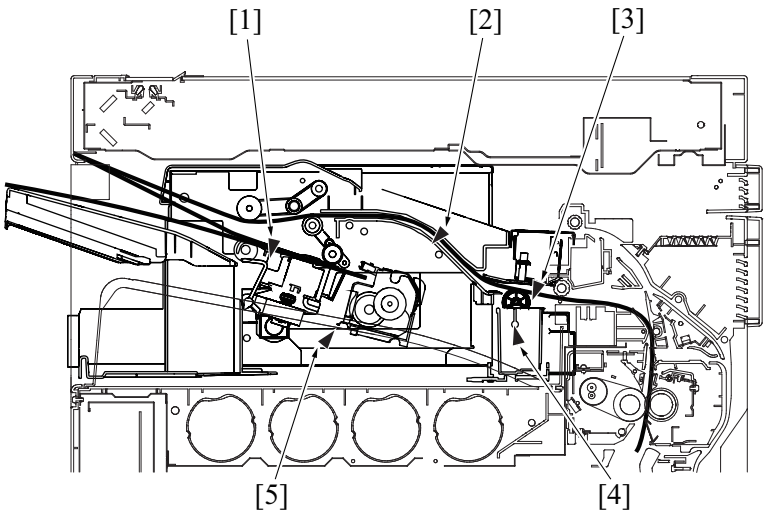


| | | | |
|---|---|---|---|
| [1] | Paper surface detect sensor/1 (PS102) | [2] | Paper feed sensor (PS101) |
| [3] | Paper feed sensor (PS201) | [4] | Punch motor sensor (PS202) |
| [5] | Stapler home sensor (PS110) | - | - |

### 1.3.8 FS-534/PK-520/FS-534SD

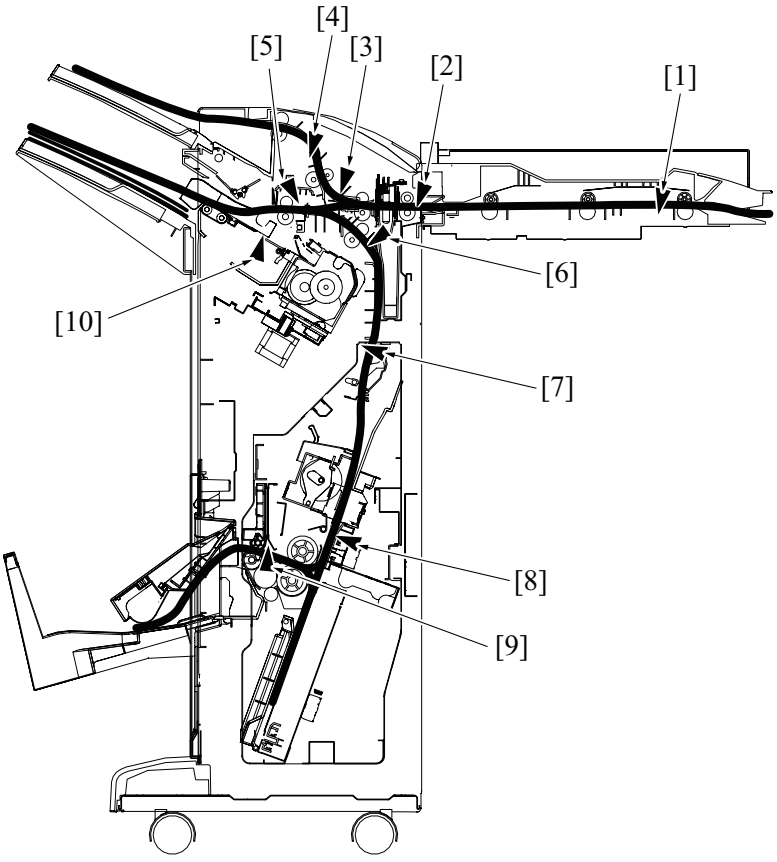


| | | | |
|---|---|---|---|
| [1] | RU entrance sensor (PS2) | [2] | FNS entrance sensor (PS4) |
| [3] | Punch position sensor (PS2) | [4] | Sub tray exit sensor (PS8) |
| [5] | Saddle exit sensor (PS5) | [6] | Staple stacker paper detection sensor (PS31) |
| [7] | SD entrance sensor (PS1) | [8] | Center staple/fold stacker paper detect sensor (PS3) |
| [9] | Fold exit sensor (PS12) | [10] | Main tray exit sensor (PS16) |

## 1.4 Initial check items

- When a paper misfeed occurs, first perform the following initial check items.

| Check item | Action |
|---|---|
| Does paper meet product specifications? | Replace paper. |
| Is the paper curled, wavy, or damp? | Replace paper.<br>Instruct user on proper paper storage. |
| Is a foreign object present along the paper path, or is the paper path deformed or worn? | Clean the paper path or replace the part on the paper path if necessary. |
| Are rolls/rollers dirty, deformed, or worn? | Clean the defective roll/roller.<br>Replace the defective roll/roller. |
| Are the paper size and the detected paper size by the edge guide are matching? | Adjust the edge guide to match the paper size. |
| Are the actuators operating correctly? | Correct the defective actuator.<br>Replace the defective actuator. |

## 1.5 Jam when thin or thick paper is fed

### 1.5.1 Paper jam for thin paper

If paper jams occur while feeding thin paper (52 g/m$^2$ (13 13/16 lb)) from the tray 1 or the tray 2, adjust the paper pick-up pressure of the tray 1 or the tray 2 to apply the pick-up pressure for thin paper to the tray. However, if the pick-up pressure is changed to the one for thin paper, jam may occur especially when thick paper is used.
I.11.2.2 Pick-up pressure adjustment of the tray 1/2

### 1.5.2 Paper jam for thick paper

If paper jams occur while feeding thick paper from the manual bypass, adjust the separator roller pressure of the manual bypass to apply the separator roller pressure for thick paper to the tray. However, if the separator roller pressure is changed to the one for thick paper, jam may occur especially when thin paper is used.
I.11.2.3 Separator roller pressure adjustment of the bypass tray

## 1.6 1#-##

### 1.6.1 10-01, 10-02, 10-40

#### (1) Contents

| | | |
|---|---|---|
| JAM type | Misfeed at manual bypass feed section | |
| JAM code | 10-01, 10-02, 10-40 | |
| JAM detection timing | 10-01 | The leading edge of the paper is not turned ON (unblocked) the registration sensor (PS1) even after the lapse of a given period of time after the manual bypass tray starts to feed paper. |
| | 10-02 | For paper fed from the manual bypass tray, loop forming has not been complete before a sheet enters the registration roller because the rise timing of load to perform registration is earlier than the rise timing of load to form a loop. |
| | 10-40 | For paper fed from the manual bypass tray, the image write start signal permit continues to be disabled for a predetermined period of time after the timing of the image write start signal output. |
| Misfeed processing location | Right door | |
| Relevant parts | • Transport motor (M1)<br>• Registration clutch (CL4)<br>• Bypass paper feed clutch (CL7)<br>• Bypass pick-up solenoid (SD1)<br>• Registration sensor (PS1)<br>• Front side board (FRB)<br>• MFP board (MFPB) | |

#### (2) Procedure

| Step | Action | Control signal | Location of electrical component |
|---|---|---|---|
| 1 | Initial check items | - | - |
| 2 | PS1 I/O check, sensor check | FRB CN8-3 (ON) | 6-L |
| 3 | CL4 operation check | FRB CN8-7 (CL4_24V) | 5-L |
| 4 | CL7 operation check | MFPB CN18E-8 (ON) | 22-J |
| 5 | SD1 operation check | MFPB CN18E-10 (ON) | 22-J |
| 6 | M1 operation check | MFPB CN8E-3 (REM)<br>MFPB CN8E-6 (LOCK) | 2-C |
| 7 | MFPB ICP2E, ICP4E conduction check | - | - |
| 8 | Replace FRB. | - | - |
| 9 | Replace MFPB. | - | - |

- Link to the wiring diagram (N.1. bizhub C368/C308/C258)

### 1.6.2 11-01, 11-02, 11-40

#### (1) Contents

| | | |
|---|---|---|
| JAM type | Misfeed at tray 1 feed section | |
| JAM code | 11-01, 11-02, 11-40 | |
| JAM detection timing | 11-01 | The leading edge of the paper is not turned ON (unblocked) the registration sensor (PS1) even after the lapse of a given period of time after the tray 1 starts to feed paper. |
| | 11-02 | For paper fed from the tray 1, due to a delay in paper arrival, loop forming in front of the registration roller is not complete before the rise timing of the transport motor (M1). |
| | 11-40 | For paper fed from the tray 1, the image write start signal permit continues to be disabled for a predetermined period of time after the timing of the image write start signal output. |
| Misfeed processing location | • Right door<br>• Tray 1 | |
| Relevant parts | • Transport motor (M1)<br>• Tray 1 paper feed clutch (CL3)<br>• Registration clutch (CL4)<br>• Registration sensor (PS1)<br>• Front side board (FRB)<br>• MFP board (MFPB) | |

#### (2) Procedure

| Step | Action | Control signal | Location of electrical component |
|---|---|---|---|
| 1 | Initial check items | - | - |
| 2 | PS1 I/O check, sensor check | FRB CN8-3 (ON) | 6-L |
| 3 | CL3 operation check | MFPB CN26E-8 (ON) | 25-C |
| 4 | CL4 operation check | FRB CN8-7 (CL4_24V) | 5-L |
| 5 | M1 operation check | MFPB CN8E-3 (REM)<br>MFPB CN8E-6 (LOCK) | 2-C |
| 6 | MFPB ICP2E, ICP4E conduction check | - | - |
| 7 | Replace FRB. | - | - |
| 8 | Replace MFPB. | - | - |

- Link to the wiring diagram (N.1. bizhub C368/C308/C258)

### 1.6.3 12-01, 12-40

#### (1) Contents

| | | |
|---|---|---|
| JAM type | Misfeed at tray 2 feed section | |
| JAM code | 12-01, 12-40 | |
| JAM detection timing | 12-01 | The leading edge of the paper does not turn ON the tray 2 vertical transport sensor (PS19) even after the lapse of a given period of time after the tray 2 starts to feed paper. |
| | 12-40 | For paper fed from the tray 2, the image write start signal permit continues to be disabled for a predetermined period of time after the timing of the image write start signal output. |
| | - | Paper jam of a sheet of paper left at the tray 2 feed section results, if the tray 2 vertical transport sensor (PS19) is turned ON when the main power switch is turned ON, a door is opened and closed, or a misfeed or malfunction is reset. |
| | - | Paper jam of a sheet of paper left at the tray 2 feed section results, if a sheet of paper is determined to exist at a position detected when the main power switch is turned ON, a door is opened and closed, or a misfeed or malfunction is reset. |
| Misfeed processing location | • Right door<br>• Tray 2 | |
| Relevant parts | • Transport motor (M1)<br>• Tray 2 paper feed clutch (CL1)<br>• Tray 2 vertical transport clutch (CL2)<br>• Tray 2 vertical transport sensor (PS19)<br>• MFP board (MFPB) | |

#### (2) Procedure

| Step | Action | Control signal | Location of electrical component |
|---|---|---|---|
| 1 | Initial check items | - | - |
| 2 | PS19 I/O check, sensor check | MFPB CN23E-2 (ON) | 27-C |
| 3 | CL1 operation check | MFPB CN23E-14 (ON) | 28-C |
| 4 | CL2 operation check | MFPB CN23E-16 (ON) | 28-C |
| 5 | M1 operation check | MFPB CN8E-3 (REM)<br>MFPB CN8E-6 (LOCK) | 2-C |
| 6 | MFPB ICP2E conduction check | - | - |
| 7 | Replace MFPB. | - | - |

- Link to the wiring diagram (N.1. bizhub C368/C308/C258)

### 1.6.4 13-01, 13-40

#### (1) Contents

| | | |
|---|---|---|
| JAM type | Misfeed at tray 3 feed section | |
| JAM code | 13-01, 13-40 | |
| JAM detection timing | 13-01 | The leading edge of the paper is not turned ON the tray 3 vertical transport sensor (PS113) even after the lapse of a given period of time after the tray 3 starts to feed paper. |
| | 13-40 | For paper fed from the tray 3, the image write start signal permit continues to be disabled for a predetermined period of time after the timing of the image write start signal output. |
| | - | Paper jam of a sheet of paper left at the tray 3 feed section results, if the tray 3 vertical transport sensor (PS113) is turned ON when the main power switch is turned ON, a door is opened and closed, or a misfeed or malfunction is reset. |
| | - | Paper jam of a sheet of paper left at the tray 3 feed section results, if a sheet of paper is determined to exist at a position detected when the main power switch is turned ON, a door is opened and closed, or a misfeed or malfunction is reset. |
| Misfeed processing location | • Right door<br>• Tray 3 | |
| Relevant parts | • Tray 3 paper feed motor (M111)<br>• Tray 3 vertical transport motor (M112)<br>• Tray 3 vertical transport sensor (PS113)<br>• PC control board (PCCB) | |

#### (2) Procedure

| Step | Action | Control signal | Location of electrical component |
|---|---|---|---|
| 1 | Initial check items | - | - |
| 2 | PS113 I/O check, sensor check | PCCB CN4-14 (ON) | PC-110/PC-210 5-C |
| 3 | M111 operation check | PCCB CN5-1 to 8 | PC-110/PC-210 4-C |
| 4 | M112 operation check | PCCB CN5-9 to 16 | PC-110/PC-210 3 to 4-C |
| 5 | Replace PCCB. | - | - |

- Link to the wiring diagram (N.2.3 PC-110)
- Link to the wiring diagram (N.2.4 PC-210)

### 1.6.5 14-01, 14-40

#### (1) Contents

| | | |
|---|---|---|
| JAM type | Misfeed at tray 4 feed section | |
| JAM code | 14-01, 14-40 | |
| JAM detection timing | 14-01 | The leading edge of the paper is not turned ON the tray 4 vertical transport sensor (PS123) even after the lapse of a given period of time after the tray 4 starts to feed paper. |
| | 14-40 | For paper fed from the tray 4, the image write start signal permit continues to be disabled for a predetermined period of time after the timing of the image write start signal output. |
| | - | Paper jam of a sheet of paper left at the tray 4 feed section results, if the tray 4 vertical transport sensor (PS123) is turned ON when the main power switch is turned ON, a door is opened and closed, or a misfeed or malfunction is reset. |
| | - | Paper jam of a sheet of paper left at the tray 4 feed section results, if a sheet of paper is determined to exist at a position detected when the main power switch is turned ON, a door is opened and closed, or a misfeed or malfunction is reset. |
| Misfeed processing location | • Right door<br>• Tray 4 | |
| Relevant parts | • Tray 4 paper feed motor (M121)<br>• Tray 4 vertical transport motor (M122)<br>• Tray 4 vertical transport sensor (PS123)<br>• PC control board (PCCB) | |

#### (2) Procedure

| Step | Action | Control signal | Location of electrical component |
|---|---|---|---|
| 1 | Initial check items | - | - |
| 2 | PS123 I/O check, sensor check | PCCB CN18-5 (ON) | PC-210 7-K |
| 3 | M121 operation check | PCCB CN9-1 to 8 | PC-210 6-K |
| 4 | M122 operation check | PCCB CN9-9 to 16 | PC-210 6-K |
| 5 | Replace PCCB. | - | - |

- Link to the wiring diagram (N.2.4 PC-210)

### 1.6.6 15-01, 15-40

#### (1) Contents

| | | |
|---|---|---|
| JAM type | Misfeed at LCT paper feed section | |
| JAM code | 15-01, 15-40 | |
| JAM detection timing | 15-01 | The leading edge of the paper is not turned ON the paper feed sensor (PS3) even after the lapse of a given period of time after the LCT starts to feed paper. |
| | 15-40 | For paper fed from the LCT, the image write start signal permit continues to be disabled for a predetermined period of time after the timing of the image write start signal output. |
| | - | Paper jam of a sheet of paper left at the LCT feed section results, if the paper feed sensor (PS3) is turned ON when the main power switch is turned ON, a door is opened and closed, or a misfeed or malfunction is reset. |
| | - | Paper jam of a sheet of paper left at the LCT feed section results, if a sheet of paper is determined to exist at a position detected when the main power switch is turned ON, a door is opened and closed, or a misfeed or malfunction is reset. |
| Misfeed processing location | Lower right door | |
| Relevant parts | • Paper feed motor (M2)<br>• Paper feed sensor (PS3)<br>• LU drive board (LUDB)<br>• MFP board (MFPB)<br>• PC control board (PCCB) | |

#### (2) Procedure

| Step | Action | Control signal | Location of electrical component |
|---|---|---|---|
| 1 | Initial check items | - | - |
| 2 | PS3 I/O check, sensor check | LUDB CN5-8 (ON) | LU-302 4-G |
| 3 | M2 operation check | LUDB CN4-5 to 8 | LU-302 3-G |
| 4 | Replace LUDB. | - | - |
| 5 | MFPB ICP10E conduction check | - | - |
| 6 | Replace MFPB. | - | - |
| 7 | Replace PCCB. (PC-110/PC-210/PC-410) | - | - |

- Link to the wiring diagram (N.2.6 LU-302)

### 1.6.7 16-01, 16-40

#### (1) Contents

| | | |
|---|---|---|
| JAM type | Misfeed at LCC feed/transport section | |
| JAM code | 16-01, 16-40 | |
| JAM detection timing | 16-01 | The leading edge of the paper is not turned ON the vertical transport sensor (PS133) even after the lapse of a given period of time after the LCC starts to feed paper. |
| | 16-40 | For paper fed from the LCC, the image write start signal permit continues to be disabled for a predetermined period of time after the timing of the image write start signal output. |
| | - | Paper jam of a sheet of paper left at the LCC transport section results, if the vertical transport sensor (PS133) is turned ON when the main power switch is turned ON, a door is opened and closed, or a misfeed or malfunction is reset. |
| | - | Paper jam of a sheet of paper left at the LCC transport section results, if a sheet of paper is determined to exist at a position detected when the main power switch is turned ON, a door is opened and closed, or a misfeed or malfunction is reset. |
| Misfeed processing location | Right door | |
| Relevant parts | • Paper feed motor (M131)<br>• Vertical transport motor (M132)<br>• Vertical transport sensor (PS133)<br>• PC control board (PCCB) | |

#### (2) Procedure

| Step | Action | Control signal | Location of electrical component |
|---|---|---|---|
| 1 | Initial check items | - | - |
| 2 | PS133 I/O check, sensor check | PCCB CN4-14 (ON) | PC-410 7-J |
| 3 | M131 operation check | PCCB CN5-1 to 8 | PC-410 5-J |
| 4 | M132 operation check | PCCB CN5-9 to 16 | PC-410 4-J |
| 5 | Replace PCCB. | - | - |

- Link to the wiring diagram (N.2.5 PC-410)

### 1.6.8 17-20

#### (1) Contents

| | | |
|---|---|---|
| JAM type | Misfeed at LCT transport section | |
| JAM code | 17-20 | |
| JAM detection timing | 17-20 | The tray 2 vertical transport sensor (PS19) is not turn ON even after the set period of time has elapsed after the paper feed sensor (PS3) turns ON. |
| | - | Paper jam of a sheet of paper left at the LCT transport section results, if a sheet of paper is determined to exist at a position detected when the main power switch is turned ON, a door is opened and closed, or a misfeed or malfunction is reset. |
| Misfeed processing location | Lower right door | |
| Relevant parts | • Transport motor (M3)<br>• Paper feed sensor (PS3)<br>• Tray 2 vertical transport sensor (PS19)<br>• LU drive board (LUDB)<br>• PC control board (PCCB)<br>• MFP board (MFPB) | |

#### (2) Procedure

| Step | Action | Control signal | Location of electrical component |
|---|---|---|---|
| 1 | Initial check items | - | - |
| 2 | PS3 I/O check, sensor check | LUDB CN5-8 (ON) | LU-302 4-G |
| 3 | PS19 I/O check, sensor check | MFPB CN23E-2 (ON) | 27-C |
| 4 | M3 operation check | LUDB CN4-1 to 4 | LU-302 3-G |
| 5 | Replace LUDB. | - | - |
| 6 | Replace PCCB. (PC-110/PC-210/PC-410) | - | - |
| 7 | Replace MFPB. | - | - |

- Link to the wiring diagram (N.1. bizhub C368/C308/C258)
- Link to the wiring diagram (N.2.6 LU-302)

## 1.7 2#-##

### 1.7.1 20-01, 20-02

#### (1) Contents

| | | |
|---|---|---|
| JAM type | Misfeed at vertical transport section | |
| JAM code | 20-01, 20-02 | |
| JAM detection timing | 20-01 | The registration sensor (PS1) is not turned ON (unblocked) even after the lapse of a given period of time after the paper has turned ON the tray 2 vertical transport sensor (PS19). |
| | 20-02 | For paper fed from the tray 2, tray 3, tray 4, LCC or LCT, loop forming has not been complete before a sheet enters the registration roller because the rise timing of load to perform registration is earlier than the rise timing of load to form a loop. |
| Misfeed processing location | Right door | |
| Relevant parts | • Transport motor (M1)<br>• Tray 2 vertical transport clutch (CL2)<br>• Registration clutch (CL4)<br>• Registration sensor (PS1)<br>• Tray 2 vertical transport sensor (PS19)<br>• Front side board (FRB)<br>• MFP board (MFPB) | |

#### (2) Procedure

| Step | Action | Control signal | Location of electrical component |
|---|---|---|---|
| 1 | Initial check items | - | - |
| 2 | PS1 I/O check, sensor check | FRB CN8-3 (ON) | 6-L |
| 3 | PS19 I/O check, sensor check | MFPB CN23E-2 (ON) | 27-C |
| 4 | CL2 operation check | MFPB CN23E-16 (ON) | 28-C |
| 5 | CL4 operation check | FRB CN8-7 (CL4_24V) | 5-L |
| 6 | M1 operation check | MFPB CN8E-3 (REM)<br>MFPB CN8E-6 (LOCK) | 2-C |
| 7 | Replace FRB. | - | - |
| 8 | Replace MFPB. | - | - |

- Link to the wiring diagram (N.1. bizhub C368/C308/C258)

### 1.7.2 20-21

#### (1) Contents

| | | | |
|---|---|---|---|
| JAM type | Misfeed at vertical transport section (tray 3) | | |
| JAM code | 20-21 | | |
| JAM detection timing | 20-21 | <When PC-110 or PC-210 is installed> | The tray 2 vertical transport sensor (PS19) is not turned ON even after the lapse of a given period of time after the tray 3 vertical transport sensor (PS113) has been blocked by a paper. |
| | | <When PC-410 is installed> | The tray 2 vertical transport sensor (PS19) is not turned ON even after the lapse of a given period of time after the vertical transport sensor (PS133) has been blocked by a paper. |
| | - | Paper jam of a sheet of paper left at the vertical transport section results, if a sheet of paper is determined to exist at a position detected when the main power switch is turned ON, a door is opened and closed, or a misfeed or malfunction is reset. | |
| Misfeed processing location | Right door | | |
| Relevant parts | <When PC-110 or PC-210 is installed> | • Transport motor (M1)<br>• Tray 3 vertical transport motor (M112)<br>• Tray 2 vertical transport clutch (CL2)<br>• Tray 2 vertical transport sensor (PS19)<br>• Tray 3 vertical transport sensor (PS113)<br>• MFP board (MFPB)<br>• PC control board (PCCB) | |
| | <When PC-410 is installed> | • Transport motor (M1)<br>• Vertical transport motor (M132)<br>• Tray 2 vertical transport clutch (CL2)<br>• Tray 2 vertical transport sensor (PS19)<br>• Vertical transport sensor (PS133)<br>• MFP board (MFPB)<br>• PC control board (PCCB) | |

#### (2) Procedure

When PC-110 or PC-210 is installed

| Step | Action | Control signal | Location of electrical component |
|---|---|---|---|
| 1 | Initial check items | - | - |
| 2 | PS113 I/O check, sensor check | PCCB CN4-14 (ON) | PC-110/PC-210 5-C |
| 3 | PS19 I/O check, sensor check | MFPB CN23E-2 (ON) | 27-C |
| 4 | CL2 operation check | MFPB CN23E-16 (ON) | 28-C |
| 5 | M112 operation check | PCCB CN5-9 to 16 | PC-110/PC-210 3 to 4-C |
| 6 | M1 operation check | MFPB CN8E-3 (REM)<br>MFPB CN8E-6 (LOCK) | 2-C |
| 7 | Replace MFPB. | - | - |
| 8 | Replace PCCB. | - | - |

- Link to the wiring diagram (N.1. bizhub C368/C308/C258)
- Link to the wiring diagram (N.2.3 PC-110)
- Link to the wiring diagram (N.2.4 PC-210)

When PC-410 is installed

| Step | Action | Control signal | Location of electrical component |
|---|---|---|---|
| 1 | Initial check items | - | - |
| 2 | PS133 I/O check, sensor check | PCCB CN4-14 (ON) | PC-410 7-J |
| 3 | PS19 I/O check, sensor check | MFPB CN23E-2 (ON) | 27-C |
| 4 | CL2 operation check | MFPB CN23E-16 (ON) | 28-C |
| 5 | M132 operation check | PCCB CN5-9 to 16 | PC-410 4-J |
| 6 | M1 operation check | MFPB CN8E-3 (REM)<br>MFPB CN8E-6 (LOCK) | 2-C |
| 7 | Replace MFPB. | - | - |
| 8 | Replace PCCB. | - | - |

- Link to the wiring diagram (N.1. bizhub C368/C308/C258)
- Link to the wiring diagram (N.2.5 PC-410)

### 1.7.3 20-22

#### (1) Contents

| | | |
|---|---|---|
| JAM type | Misfeed at vertical transport section (tray 4) | |
| JAM code | 20-22 | |
| JAM detection timing | 20-22 | The tray 3 vertical transport sensor (PS113) is not turned ON even after the lapse of a given period of time after the tray 4 vertical transport sensor (PS123) has been blocked by a paper. |

| | | |
|---|---|---|
| | - | Paper jam of a sheet of paper left at the vertical transport section results, if a sheet of paper is determined to exist at a position detected when the main power switch is turned ON, a door is opened and closed, or a misfeed or malfunction is reset. |
| Misfeed processing location | Right door | |
| Relevant parts | • Tray 3 vertical transport motor (M112)<br>• Tray 4 vertical transport motor (M122)<br>• Tray 3 vertical transport sensor (PS113)<br>• Tray 4 vertical transport sensor (PS123)<br>• PC control board (PCCB) | |

**(2) Procedure**

| Step | Action | Control signal | Location of electrical component |
|---|---|---|---|
| 1 | Initial check items | - | - |
| 2 | PS123 I/O check, sensor check | PCCB CN18-5 (ON) | PC-210 7-K |
| 3 | PS113 I/O check, sensor check | PCCB CN4-14 (ON) | PC-210 5-C |
| 4 | M122 operation check | PCCB CN9-9 to 16 | PC-210 6-K |
| 5 | M112 operation check | PCCB CN5-9 to 16 | PC-210 3 to 4-C |
| 6 | Replace PCCB. | - | - |

- Link to the wiring diagram (N.2.4 PC-210)

## 1.8 3#-##

### 1.8.1 30-03

**(1) Contents**

| | | |
|---|---|---|
| JAM type | Misfeed at 2nd transfer section | |
| JAM code | 30-03 | |
| JAM detection timing | 30-03 | The leading edge of paper is not turned ON (unblocked) the paper exit sensor (PS3) since the paper feeding is started. |
| | - | Paper jam of a sheet of paper left at the 2nd transfer section results, if the registration sensor (PS1) is turned ON (unblocked) when the main power switch is turned ON, a door is opened and closed, or a misfeed or malfunction is reset. |
| | - | Paper jam of a sheet of paper left at the 2nd transfer section results, if a sheet of paper is determined to exist at a position detected when the main power switch is turned ON, a door is opened and closed, or a misfeed or malfunction is reset. |
| Misfeed processing location | Right door | |
| Relevant parts | • Transport motor (M1)<br>• Fusing motor (M3)<br>• Registration clutch (CL4)<br>• Registration sensor (PS1)<br>• Paper exit sensor (PS3)<br>• Front side board (FRB)<br>• MFP board (MFPB) | |

**(2) Procedure**

| Step | Action | Control signal | Location of electrical component |
|---|---|---|---|
| 1 | Initial check items | - | - |
| 2 | PS1 I/O check, sensor check | FRB CN8-3 (ON) | 6-L |
| 3 | PS3 I/O check, sensor check | MFPB CN17E-7 (ON) | 5-C |
| 4 | CL4 operation check | FRB CN8-7 (CL4_24V) | 5-L |
| 5 | M1 operation check | MFPB CN8E-3 (REM)<br>MFPB CN8E-6 (LOCK) | 2-C |
| 6 | M3 operation check | MFPB CN8E-9 (REM)<br>MFPB CN8E-12 (LOCK) | 2-C |
| 7 | Replace FRB. | - | - |
| 8 | Replace MFPB. | - | - |

- Link to the wiring diagram (N.1. bizhub C368/C308/C258)

### 1.8.2 32-01, 32-05

**(1) Contents**

| | | |
|---|---|---|
| JAM type | Misfeed at exit section | |
| JAM code | 32-01, 32-05 | |
| JAM detection timing | 32-01 | The ADU paper passage sensor/1 (PS40) is not turned ON (unblocked) even after the lapse of a given period of time after the reverse sequence is started. |

| | | |
|---|---|---|
| | 32-05 | The paper exit sensor (PS3) is not turned OFF (blocked) even after the lapse of a given period of time after the paper has turned ON (unblocked) PS3. |
| | - | Paper jam of a sheet of paper left at the exit section results, if the paper exit sensor (PS3) is turned ON (unblocked) when the main power switch is turned ON, a door is opened and closed, or a misfeed or malfunction is reset. |
| | - | Paper jam of a sheet of paper left at the exit section results, if a sheet of paper is determined to exist at a position detected when the main power switch is turned ON, a door is opened and closed, or a misfeed or malfunction is reset. |
| Misfeed processing location | Right door | |
| Relevant parts | • Fusing motor (M3)<br>• Reverse motor (M4)<br>• ADU transport motor (M5)<br>• Paper exit clutch (CL8)<br>• Paper exit sensor (PS3)<br>• ADU paper passage sensor/1 (PS40)<br>• Gate switch solenoid (SD3)<br>• Front side board (FRB)<br>• MFP board (MFPB) | |

### (2) Procedure

| Step | Action | Control signal | Location of electrical component |
|---|---|---|---|
| 1 | Initial check items | - | - |
| 2 | PS3 I/O check, sensor check | MFPB CN17E-7 (ON) | 5-C |
| 3 | PS40 I/O check, sensor check | MFPB CN17E-10 (ON) | 5-C |
| 4 | CL8 operation check | MFPB CN15EA-15 (ON) | 8-C |
| 5 | SD3 operation check | MFPB CN15EA-9 (ON) | 7-C |
| 6 | M3 operation check | MFPB CN8E-9 (REM)<br>MFPB CN8E-12 (LOCK) | 2-C |
| 7 | M4 operation check | MFPB CN15EA-1 to 4 | 6-C |
| 8 | M5 operation check | MFPB CN17E-1 to 4 | 4-C |
| 9 | Replace FRB. | - | - |
| 10 | MFPB ICP3E conduction check | - | - |
| 11 | Replace MFPB. | - | - |

- Link to the wiring diagram (N.1. bizhub C368/C308/C258)

## 1.9 6#-##

### 1.9.1 66-01, 66-11, 66-21

### (1) Contents

| | | | |
|---|---|---|---|
| JAM type | Misfeed at DF turnover section | | |
| JAM code | 66-01, 66-11, 66-21 | | |
| JAM detection timing | 66-01 | <When DF-629 is installed> | The document registration sensor (PS3) is not turned ON (unblocked) by the paper even after the set period of time has elapsed after the reverse registration operation started. |
| | 66-11 | <When DF-629 is installed> | The document registration sensor (PS3) is not turned OFF (blocked) after the set period of time after PS3 is turned ON (unblocked) after the switchback registration started. |
| | 66-21 | <When DF-629 is installed> | The document reading sensor (PS4) is not turned ON after a lapse of a given time after the document registration sensor (PS3) is turned ON (unblocked). |
| Misfeed processing location | • Left cover<br>• Re-feeding opening | | |
| Relevant parts | • Document reading motor (M1)<br>• Registration motor (M3)<br>• Document registration sensor (PS3)<br>• Document reading sensor (PS4)<br>• DF control board (DFCB) | | |

### (2) Procedure

| Step | Action | Control signal | Location of electrical component |
|---|---|---|---|
| 1 | Initial check items | - | - |
| 2 | PS4 I/O check, sensor check | DFCB J10-3 (ON) | DF-629 2-G |
| 3 | PS3 I/O check, sensor check | DFCB J14-12 (ON) | DF-629 5-G |
| 4 | M1 operation check | DFCB J7-1 to 4 | DF-629 2-B |
| 5 | M3 operation check | DFCB J6-1 to 4 | DF-629 3-B |

| Step | Action | Control signal | Location of electrical component |
|---|---|---|---|
| 6 | Replace DFCB. | - | - |

- Link to the wiring diagram (N.2.1 DF-629)

### 1.9.2 66-02, 66-12

#### (1) Contents

| | | | |
|---|---|---|---|
| JAM type | Misfeed at DF paper feed section | | |
| JAM code | 66-02, 66-12 | | |
| JAM detection timing | 66-02 | <When DF-629 or DF-704 is installed> | The after separate sensor (PS2) is not turned ON (blocked) after a lapse of a given time after the document feed motor (M2) is turned ON. |
| | 66-12 | <When DF-629 or DF-704 is installed> | The size of the original on the tray detected by DF does not match the size of the original detected by the main body. |
| Misfeed processing location | Left cover | | |
| Relevant parts | <When DF-629 is installed> | | • Document feed motor (M2)<br>• After separate sensor (PS2)<br>• Document length size sensor/1 (PS6)<br>• Document length size sensor/2 (PS7)<br>• Document width size sensor (VR1)<br>• DF control board (DFCB) |
| | <When DF-704 is installed> | | • Document feed motor (M2)<br>• After separate sensor (PS2)<br>• Document length sensor/1 (PS8)<br>• Document length sensor/2 (PS9)<br>• Document width sensor (VR1)<br>• DF control board (DFCB) |

#### (2) Procedure

When DF-629 is installed

| Step | Action | Control signal | Location of electrical component |
|---|---|---|---|
| 1 | Initial check items | - | - |
| 2 | PS2 I/O check, sensor check | DFCB J14-8 (ON) | DF-629 6-G |
| 3 | PS6 I/O check, sensor check | DFCB J12-6 (ON) | DF-629 4-G |
| 4 | PS7 I/O check, sensor check | DFCB J12-5 (ON) | DF-629 4-G |
| 5 | VR1 I/O check, sensor check | DFCB J12-3 (ON) | DF-629 4-G |
| 6 | M2 operation check | DFCB J5-1 to 4 | DF-629 2-B |
| 7 | Replace DFCB. | - | - |

- Link to the wiring diagram (N.2.1 DF-629)

When DF-704 is installed

| Step | Action | Control signal | Location of electrical component |
|---|---|---|---|
| 1 | Initial check items | - | - |
| 2 | PS2 I/O check, sensor check | DFCB J14-8 (ON) | DF-704 6-G |
| 3 | PS8 I/O check, sensor check | DFCB J12-6 (ON) | DF-704 3 to 4-G |
| 4 | PS9 I/O check, sensor check | DFCB J12-5 (ON) | DF-704 3-G |
| 5 | VR1 I/O check, sensor check | DFCB J12-3 (ON) | DF-704 4-G |
| 6 | M2 operation check | DFCB J5-1 to 4 | DF-704 1 to 2-B |
| 7 | Replace DFCB. | - | - |

- Link to the wiring diagram (N.2.2 DF-704)

### 1.9.3 66-03, 66-13, 66-23, 66-33

#### (1) Contents

| | | | |
|---|---|---|---|
| JAM type | Misfeed at DF transport section | | |
| JAM code | 66-03, 66-13, 66-23, 66-33 | | |
| JAM detection timing | 66-03 | <When DF-629 or DF-704 is installed> | The after separate sensor (PS2) is not turned OFF (unblocked) after a lapse of a given time after PS2 is turned ON (blocked). |
| | 66-13 | <When DF-629 is installed> | The document registration sensor (PS3) is not turned ON (unblocked) after a lapse of a given time after the after separate sensor (PS2) is turned ON (blocked). |
| | | <When DF-704 is installed> | The registration sensor (PS3) is not turned ON (unblocked) after a lapse of a given time after the after separate sensor (PS2) is turned ON (blocked). |
| | 66-23 | <When DF-629 is installed> | The document registration sensor (PS3) is not turned OFF (blocked) after a lapse of given time after PS3 is turned ON (unblocked). |

| | | | |
|---|---|---|---|
| | | <When DF-704 is installed> | The registration sensor (PS3) is not turned OFF (blocked) after a lapse of given time after PS3 is turned ON (unblocked). |
| | 66-33 | <When DF-629 is installed> | The document reading sensor (PS4) is not turned ON after a lapse of a given time after the document registration sensor (PS3) is turned ON (unblocked). |
| | | <When DF-704 is installed> | The document reading sensor (PS6) is not turned ON after a lapse of a given time after the registration sensor (PS3) is turned ON (unblocked). |
| Misfeed processing location | Left cover | | |
| Relevant parts | <When DF-629 is installed> | | • Document reading motor (M1)<br>• Document feed motor (M2)<br>• Registration motor (M3)<br>• After separate sensor (PS2)<br>• Document registration sensor (PS3)<br>• Document reading sensor (PS4)<br>• DF control board (DFCB) |
| | <When DF-704 is installed> | | • Document reading motor (M1)<br>• Document feed motor (M2)<br>• Registration motor (M3)<br>• After separate sensor (PS2)<br>• Registration sensor (PS3)<br>• Document reading sensor (PS6)<br>• DF control board (DFCB) |

### (2) Procedure

When DF-629 is installed

| Step | Action | Control signal | Location of electrical component |
|---|---|---|---|
| 1 | Initial check items | - | - |
| 2 | PS2 I/O check, sensor check | DFCB J14-8 (ON) | DF-629 6-G |
| 3 | PS3 I/O check, sensor check | DFCB J14-12 (ON) | DF-629 5-G |
| 4 | PS4 I/O check, sensor check | DFCB J10-3 (ON) | DF-629 2-G |
| 5 | M1 operation check | DFCB J7-1 to 4 | DF-629 2-B |
| 6 | M2 operation check | DFCB J5-1 to 4 | DF-629 2-B |
| 7 | M3 operation check | DFCB J6-1 to 4 | DF-629 3-B |
| 8 | Replace DFCB. | - | - |

- Link to the wiring diagram (N.2.1 DF-629)

When DF-704 is installed

| Step | Action | Control signal | Location of electrical component |
|---|---|---|---|
| 1 | Initial check items | - | - |
| 2 | PS2 I/O check, sensor check | DFCB J14-8 (ON) | DF-704 6-G |
| 3 | PS3 I/O check, sensor check | DFCB J14-12 (ON) | DF-704 4-G |
| 4 | PS6 I/O check, sensor check | DFCB J10-3 (ON) | DF-704 2-G |
| 5 | M1 operation check | DFCB J7-1 to 4 | DF-704 1-B |
| 6 | M2 operation check | DFCB J5-1 to 4 | DF-704 1 to 2-B |
| 7 | M3 operation check | DFCB J6-1 to 4 | DF-704 2-B |
| 8 | Replace DFCB. | - | - |

- Link to the wiring diagram (N.2.2 DF-704)

## 1.9.4 66-04, 66-14, 66-24, 66-34

### (1) Contents

| | | | |
|---|---|---|---|
| JAM type | Misfeed at DF paper exit section | | |
| JAM code | 66-04, 66-14, 66-24, 66-34 | | |
| JAM detection timing | 66-04 | <When DF-629 is installed> | The document exit sensor (PS5) is not turned ON (blocked) after a lapse of a given time after the document reading sensor (PS4) is turned ON. |
| | | <When DF-704 is installed> | The document exit sensor (PS5) is not turned ON (blocked) after a lapse of a given time after the document reading sensor (PS6) is turned ON. |
| | 66-14 | <When DF-629 is installed> | The document exit sensor (PS5) is not turned OFF (unblocked) after a lapse of a given time after the document reading sensor (PS4) is turned OFF. |
| | | <When DF-704 is installed> | The document exit sensor (PS5) is not turned OFF (unblocked) after a lapse of a given time after the document reading sensor (PS6) is turned OFF. |

| | | | |
|---|---|---|---|
| | 66-24 | <When DF-629 is installed> | The document exit sensor (PS5) is not turned ON (blocked) after a lapse of a given time after the document reading sensor (PS4) is turned ON. |
| | 66-34 | <When DF-629 is installed> | The document exit sensor (PS5) is not turned OFF (unblocked) after the laps of give time after the document reading sensor (PS4) turned OFF after the switchback exit operation started. |
| Misfeed processing location | • Left cover<br>• Opening and closing guide | | |
| Relevant parts | <When DF-629 is installed> | | • Document reading motor (M1)<br>• Document reading sensor (PS4)<br>• Document exit sensor (PS5)<br>• DF control board (DFCB) |
| | <When DF-704 is installed> | | • Document reading motor (M1)<br>• Document exit sensor (PS5)<br>• Document reading sensor (PS6)<br>• DF control board (DFCB) |

### (2) Procedure

When DF-629 is installed

| Step | Action | Control signal | Location of electrical component |
|---|---|---|---|
| 1 | Initial check items | - | - |
| 2 | PS4 I/O check, sensor check | DFCB J10-3 (ON) | DF-629 2-G |
| 3 | PS5 I/O check, sensor check | DFCB J15-6 (ON) | DF-629 3-G |
| 4 | M1 operation check | DFCB J7-1 to 4 | DF-629 2-B |
| 5 | Replace DFCB. | - | - |

- Link to the wiring diagram (N.2.1 DF-629)

When DF-704 is installed

| Step | Action | Control signal | Location of electrical component |
|---|---|---|---|
| 1 | Initial check items | - | - |
| 2 | PS6 I/O check, sensor check | DFCB J10-3 (ON) | DF-704 2-G |
| 3 | PS5 I/O check, sensor check | DFCB J15-6 (ON) | DF-704 3-G |
| 4 | M1 operation check | DFCB J7-1 to 4 | DF-704 1-B |
| 5 | Replace DFCB. | - | - |

- Link to the wiring diagram (N.2.2 DF-704)

## 1.9.5 66-05, 66-06, 66-15

### (1) Contents

| | | | |
|---|---|---|---|
| JAM type | Misfeed at DF image reading section | | |
| JAM code | 66-05, 66-06, 66-15 | | |
| JAM detection timing | 66-05 | <When DF-629 is installed> | The document reading sensor (PS4) is not turned OFF after a lapse of a given time after the document registration sensor (PS3) is turned OFF (blocked). |
| | | <When DF-704 is installed> | The document reading sensor (PS6) is not turned OFF after a lapse of a given time after the registration sensor (PS3) is turned OFF (blocked). |
| | 66-06 | <When DF-629 is installed> | The document reading sensor (PS4) is turned ON earlier than a given time after PS4 is turned OFF during original transportation. |
| | | <When DF-704 is installed> | The document reading sensor (PS6) is turned ON earlier than a given time after PS6 is turned OFF during original transportation. |
| | 66-15 | <When DF-629 is installed> | The document reading sensor (PS4) does not turn OFF after the laps of given time after the document registration sensor (PS3) is turned OFF (blocked) after the switchback read operation started. |
| Misfeed processing location | Left cover | | |
| Relevant parts | <When DF-629 is installed> | | • Document reading motor (M1)<br>• Reading roll release motor (M5)<br>• Document registration sensor (PS3)<br>• Document reading sensor (PS4)<br>• DF control board (DFCB) |
| | <When DF-704 is installed> | | • Document reading motor (M1)<br>• Reading roller release motor (M4)<br>• Registration sensor (PS3)<br>• Document reading sensor (PS6)<br>• DF control board (DFCB) |

### (2) Procedure

When DF-629 is installed

| Step | Action | Control signal | Location of electrical component |
|---|---|---|---|
| 1 | Initial check items | - | - |
| 2 | Make the adjustment of original stop position. | - | - |
| 3 | PS3 I/O check, sensor check | DFCB J14-12 (ON) | DF-629 5-G |
| 4 | PS4 I/O check, sensor check | DFCB J10-3 (ON) | DF-629 2-G |
| 5 | M1 operation check | DFCB J7-1 to 4 | DF-629 2-B |
| 6 | M5 operation check | DFCB J18-4 to 5 | DF-629 2-G |
| 7 | Replace DFCB. | - | - |

- Link to the wiring diagram (N.2.1 DF-629)

When DF-704 is installed

| Step | Action | Control signal | Location of electrical component |
|---|---|---|---|
| 1 | Initial check items | - | - |
| 2 | Make the adjustment of original stop position. | - | - |
| 3 | PS3 I/O check, sensor check | DFCB J14-12 (ON) | DF-704 4-G |
| 4 | PS6 I/O check, sensor check | DFCB J10-3 (ON) | DF-704 2-G |
| 5 | M1 operation check | DFCB J7-1 to 4 | DF-704 1-B |
| 6 | M4 operation check | DFCB J18-4 to 5 | DF-704 1-G |
| 7 | Replace DFCB. | - | - |

- Link to the wiring diagram (N.2.2 DF-704)

## 1.9.6 66-07

### (1) Contents

| | | | |
|---|---|---|---|
| JAM type | Misfeed at DF paper feed/transport/image reading/turnover/paper exit section | | |
| JAM code | 66-07 | | |
| JAM detection timing | 66-07 | <When DF-629 or DF-704 is installed> | Due to a remaining sheet of paper that has not been detected by sensors, before the start of a job, a sensor detects the sheet at an unexpected timing. |
| Misfeed processing location | Left cover | | |
| Relevant parts | <When DF-629 is installed> | | • Document registration sensor (PS3)<br>• Document reading sensor (PS4)<br>• Document exit sensor (PS5)<br>• DF control board (DFCB) |
| | <When DF-704 is installed> | | • Registration sensor (PS3)<br>• Document exit sensor (PS5)<br>• Document reading sensor (PS6)<br>• DF control board (DFCB) |

### (2) Procedure

When DF-629 is installed

| Step | Action | Control signal | Location of electrical component |
|---|---|---|---|
| 1 | Initial check items | - | - |
| 2 | Make the adjustment of original stop position. | - | - |
| 3 | PS3 I/O check, sensor check | DFCB J14-12 (ON) | DF-629 5-G |
| 4 | PS4 I/O check, sensor check | DFCB J10-3 (ON) | DF-629 2-G |
| 5 | PS5 I/O check, sensor check | DFCB J15-6 (ON) | DF-629 3-G |
| 6 | Replace DFCB. | - | - |

- Link to the wiring diagram (N.2.1 DF-629)

When DF-704 is installed

| Step | Action | Control signal | Location of electrical component |
|---|---|---|---|
| 1 | Initial check items | - | - |
| 2 | Make the adjustment of original stop position. | - | - |
| 3 | PS3 I/O check, sensor check | DFCB J14-12 (ON) | DF-704 4-G |
| 4 | PS5 I/O check, sensor check | DFCB J15-6 (ON) | DF-704 3-G |
| 5 | PS6 I/O check, sensor check | DFCB J10-3 (ON) | DF-704 2-G |
| 6 | Replace DFCB. | - | - |

- Link to the wiring diagram (N.2.2 DF-704)

## 1.10 7#-##

### 1.10.1 72-14

#### (1) Contents

| | | | |
|---|---|---|---|
| JAM type | Misfeed at FS transport section | | |
| JAM code | 72-14 | | |
| JAM detection timing | 72-14 | <When FS-534 or FS-534SD is installed> | The staple stacker paper detection sensor (PS31) is not turned ON even after the set period of time has elapsed after the saddle exit sensor (PS5) is turned ON by the paper. |
| Misfeed processing location | Front door | | |
| Relevant parts | • Saddle exit sensor (PS5)<br>• Staple stacker paper detection sensor (PS31)<br>• FS control board (FSCB) | | |

#### (2) Procedure

| Step | Action | Control signal | Location of electrical component |
|---|---|---|---|
| 1 | Initial check items | - | - |
| 2 | PS5 I/O check, sensor check | FSCB J5-2 (ON) | FS-534 10-K |
| 3 | PS31 I/O check, sensor check | FSCB J12-11 (ON) | FS-534 6-C |
| 4 | Replace FSCB. | - | - |

- Link to the wiring diagram (N.2.8 FS-534)

### 1.10.2 72-15

#### (1) Contents

| | | | |
|---|---|---|---|
| JAM type | Misfeed at FS transport section | | |
| JAM code | 72-15 | | |
| JAM detection timing | 72-15 | <When FS-534 or FS-534SD is installed> | The staple stacker paper detection sensor (PS31) is not turned OFF even after the set period of time has elapsed after it is turned ON. |
| Misfeed processing location | Front door | | |
| Relevant parts | • Staple stacker paper detection sensor (PS31)<br>• FS control board (FSCB) | | |

#### (2) Procedure

| Step | Action | Control signal | Location of electrical component |
|---|---|---|---|
| 1 | Initial check items | - | - |
| 2 | PS31 I/O check, sensor check | FSCB J12-11 (ON) | FS-534 6-C |
| 3 | Replace FSCB. | - | - |

- Link to the wiring diagram (N.2.8 FS-534)

### 1.10.3 72-16

#### (1) Contents

| | | | |
|---|---|---|---|
| JAM type | Misfeed at FS transport section | | |
| JAM code | 72-16 | | |
| JAM detection timing | 72-16 | <When FS-533 is installed> | The paper feed sensor (PS101) is not turned ON even after the set period of time has elapsed after the main body's paper exit sensor (PS3) is turned OFF (unblocked) by the paper. |
| | | <When FS-533+PK-519 is installed> | The paper feed sensor (PS101) is not turned ON even after the set period of time has elapsed after the paper feed sensor (PS201) is turned ON by the paper. |
| | | <When FS-534 or FS-534SD is installed> | The FNS entrance sensor (PS4) is not turned ON even after the set period of time has elapsed after the RU entrance sensor (PS2) is turned ON (blocked) by the paper. |
| Misfeed processing location | • Finisher paper feed section (When FS-533 is installed)<br>• Horizontal transport cover (When FS-534 or FS-534SD is installed) | | |
| Relevant parts | <When FS-533 is installed> | • Paper conveyance motor (M101)<br>• Paper exit sensor (PS3)<br>• Paper feed sensor (PS101)<br>• FS control board (FSCB)<br>• MFP board (MFPB) | |

| | | |
|---|---|---|
| | <When FS-533+PK-519 is installed> | • Paper conveyance motor (M101)<br>• Paper feed sensor (PS101)<br>• Paper feed sensor (PS201)<br>• FS control board (FSCB)<br>• MFP board (MFPB) |
| | <When FS-534 or FS-534SD is installed> | • RU entrance sensor (PS2)<br>• FNS entrance sensor (PS4)<br>• FS control board (FSCB) |

### (2) Procedure

When FS-533 or FS-533+PK-519 is installed

| Step | Action | Control signal | Location of electrical component |
|---|---|---|---|
| 1 | Initial check items | - | - |
| 2 | PS3 I/O check, sensor check | MFPB CN17E-7 (ON) | 5-C |
| 3 | PS101 I/O check, sensor check | FSCB CN111 | FS-533 7-D to E |
| 4 | PS201 I/O check, sensor check | PKCB CN204 | FS-533 (PK-519) 5-C |
| 5 | M101 operation check | FSCB CN101 | FS-533 6-J |
| 6 | FSCB CP101 conduction check | - | - |
| 7 | Replace FSCB | - | - |
| 8 | Replace MFPB. | - | - |

- Link to the wiring diagram (N.1. bizhub C368/C308/C258)
- Link to the wiring diagram (N.2.7 FS-533)

When FS-534 or FS-534SD is installed

| Step | Action | Control signal | Location of electrical component |
|---|---|---|---|
| 1 | Initial check items | - | - |
| 2 | PS2 I/O check, sensor check | FSCB J6-7 (ON) | FS-534 6-K |
| 3 | PS4 I/O check, sensor check | FSCB J7-13 (ON) | FS-534 8-K |
| 4 | Replace FSCB. | - | - |

- Link to the wiring diagram (N.2.8 FS-534)

## 1.10.4 72-17

### (1) Contents

| | | | |
|---|---|---|---|
| JAM type | Misfeed at FS transport section | | |
| JAM code | 72-17 | | |
| JAM detection timing | 72-17 | <When FS-533 is installed> | The paper feed sensor (PS101) is not turn OFF even after the set period of time has elapsed after it turns ON. |
| | | <When FS-534 or FS-534SD is installed> | The FNS entrance sensor (PS4) is not turned OFF even after the set period of time has elapsed after it is turned ON by the paper. |
| Misfeed processing location | • Finisher paper feed section (When FS-533 is installed)<br>• Front door (When FS-534 or FS-534SD is installed) | | |
| Relevant parts | <When FS-533 is installed> | | • Paper conveyance motor (M101)<br>• Paper feed sensor (PS101)<br>• FS control board (FSCB) |
| | <When FS-534 or FS-534SD is installed> | | • FNS entrance sensor (PS4)<br>• FS control board (FSCB) |

### (2) Procedure

When FS-533 is installed

| Step | Action | Control signal | Location of electrical component |
|---|---|---|---|
| 1 | Initial check items | - | - |
| 2 | PS101 I/O check, sensor check | FSCB CN111 | FS-533 7-D to E |
| 3 | M101 operation check | FSCB CN101 | FS-533 6-J |
| 4 | FSCB CP101 conduction check | - | - |
| 5 | Replace FSCB. | - | - |

- Link to the wiring diagram (N.2.7 FS-533)

When FS-534 or FS-534SD is installed

| Step | Action | Control signal | Location of electrical component |
|---|---|---|---|
| 1 | Initial check items | - | - |
| 2 | PS4 I/O check, sensor check | FSCB J7-13 (ON) | FS-534 8-K |
| 3 | Replace FSCB. | - | - |

- Link to the wiring diagram (N.2.8 FS-534)

### 1.10.5 72-18

#### (1) Contents

| | | | |
|---|---|---|---|
| JAM type | Misfeed at FS transport section | | |
| JAM code | 72-18 | | |
| JAM detection timing | 72-18 | <When FS-534 or FS-534SD is installed> | • The saddle exit sensor (PS5) is not turned ON even after the set period of time has elapsed after the FNS entrance sensor (PS4) is turned ON by the paper.<br>• While the buffer is controlled, the saddle exit sensor (PS5) is not tuned ON even after the set period of time has elapsed after the reverse rotation drive is started. |
| Misfeed processing location | Front door | | |
| Relevant parts | • FNS entrance sensor (PS4)<br>• Saddle exit sensor (PS5)<br>• FS control board (FSCB) | | |

#### (2) Procedure

| Step | Action | Control signal | Location of electrical component |
|---|---|---|---|
| 1 | Initial check items | - | - |
| 2 | PS4 I/O check, sensor check | FSCB J7-13 (ON) | FS-534 8-K |
| 3 | PS5 I/O check, sensor check | FSCB J5-2 (ON) | FS-534 10-K |
| 4 | Replace FSCB. | - | - |

- Link to the wiring diagram (N.2.8 FS-534)

### 1.10.6 72-19

#### (1) Contents

| | | | |
|---|---|---|---|
| JAM type | Misfeed at FS transport section | | |
| JAM code | 72-19 | | |
| JAM detection timing | 72-19 | <When FS-534 or FS-534SD is installed> | The saddle exit sensor (PS5) is not turned OFF even after the set period of time has elapsed after it is turned ON. |
| Misfeed processing location | Front door | | |
| Relevant parts | • Saddle exit sensor (PS5)<br>• FS control board (FSCB) | | |

#### (2) Procedure

| Step | Action | Control signal | Location of electrical component |
|---|---|---|---|
| 1 | Initial check items | - | - |
| 2 | PS5 I/O check, sensor check | FSCB J5-2 (ON) | FS-534 10-K |
| 3 | Replace FSCB. | - | - |

- Link to the wiring diagram (N.2.8 FS-534)

### 1.10.7 72-21

#### (1) Contents

| | | | |
|---|---|---|---|
| JAM type | Misfeed at FS transport section | | |
| JAM code | 72-21 | | |
| JAM detection timing | 72-21 | <When FS-533 is installed> | The paper surface detect sensor/1 (PS102) is not turned OFF (unblocked) after the paper exit. |
| | | <When FS-534 or FS-534SD is installed> | The main tray exit sensor (PS16) is not turn OFF even after the set period of time has elapsed after the start of exiting paper. |
| Misfeed processing location | • Finisher paper exit section (When FS-533 is installed)<br>• Front door (When FS-534 or FS-534SD is installed) | | |
| Relevant parts | <When FS-533 is installed> | | • Paper exit motor (M102)<br>• Paper surface detect sensor/1 (PS102)<br>• FS control board (FSCB) |
| | <When FS-534 or FS-534SD is installed> | | • Main tray exit sensor (PS16)<br>• FS control board (FSCB) |

#### (2) Procedure

When FS-533 is installed

| Step | Action | Control signal | Location of electrical component |
|---|---|---|---|
| 1 | Initial check items | - | - |
| 2 | PS102 I/O check, sensor check | FSCB CN102 | FS-533 6-J |

| Step | Action | Control signal | Location of electrical component |
|---|---|---|---|
| 3 | M102 operation check | FSCB CN109 | FS-533 8 to 9-D to E |
| 4 | FSCB CP102 conduction check | - | - |
| 5 | Replace FSCB. | - | - |

- Link to the wiring diagram (N.2.7 FS-533)

When FS-534 or FS-534SD is installed

| Step | Action | Control signal | Location of electrical component |
|---|---|---|---|
| 1 | Initial check items | - | - |
| 2 | PS16 I/O check, sensor check | FSCB J9<B>-2 (ON) | FS-534 9-C |
| 3 | Replace FSCB. | - | - |

- Link to the wiring diagram (N.2.8 FS-534)

### 1.10.8 72-22

#### (1) Contents

| | | | |
|---|---|---|---|
| JAM type | Misfeed at FS transport section | | |
| JAM code | 72-22 | | |
| JAM detection timing | 72-22 | <When FS-534 or FS-534SD is installed> | The sub tray exit sensor (PS8) is not turned ON (blocked) even after the set period of time has elapsed after the paper reaches the paper transport acceleration point. |
| Misfeed processing location | Front door | | |
| Relevant parts | • Sub tray exit sensor (PS8)<br>• FS control board (FSCB) | | |

#### (2) Procedure

| Step | Action | Control signal | Location of electrical component |
|---|---|---|---|
| 1 | Initial check items | - | - |
| 2 | PS8 I/O check, sensor check | FSCB J9<B>-6 (ON) | FS-534 9-C |
| 3 | Replace FSCB. | - | - |

- Link to the wiring diagram (N.2.8 FS-534)

### 1.10.9 72-23

#### (1) Contents

| | | | |
|---|---|---|---|
| JAM type | Misfeed at FS transport section | | |
| JAM code | 72-23 | | |
| JAM detection timing | 72-23 | <When FS-534 or FS-534SD is installed> | The sub tray exit sensor (PS8) is not turned OFF (unblocked) even after the set period of time has elapsed after it is turned ON (blocked). |
| Misfeed processing location | Front door | | |
| Relevant parts | • Sub tray exit sensor (PS8)<br>• FS control board (FSCB) | | |

#### (2) Procedure

| Step | Action | Control signal | Location of electrical component |
|---|---|---|---|
| 1 | Initial check items | - | - |
| 2 | PS8 I/O check, sensor check | FSCB J9<B>-6 (ON) | FS-534 9-C |
| 3 | Replace FSCB. | - | - |

- Link to the wiring diagram (N.2.8 FS-534)

### 1.10.10 72-25

#### (1) Contents

| | | | |
|---|---|---|---|
| JAM type | Misfeed at SD paper exit section | | |
| JAM code | 72-25 | | |
| JAM detection timing | 72-25 | <When FS-534SD is installed> | The fold exit sensor (PS12) is not turned ON by the paper even after the set period of time has elapsed after the half-fold exit operation started. |
| Misfeed processing location | • Front door<br>• Stacker unit | | |

| | |
|---|---|
| Relevant parts | • Fold exit sensor (PS12)<br>• SD drive board (SDDB)<br>• FS control board (FSCB) |

### (2) Procedure

| Step | Action | Control signal | Location of electrical component |
|---|---|---|---|
| 1 | Initial check items | - | - |
| 2 | PS12 I/O check, sensor check | SDDB J9-2 (ON) | SD-511 5-G |
| 3 | Replace SDDB. | - | - |
| 4 | Replace FSCB. | - | - |

- Link to the wiring diagram (N.2.9 FS-534SD)

## 1.10.11 72-26

### (1) Contents

| | | | |
|---|---|---|---|
| JAM type | Misfeed at SD paper exit section | | |
| JAM code | 72-26 | | |
| JAM detection timing | 72-26 | <When FS-534SD is installed> | The fold exit sensor (PS12) is not turned OFF even after the set period of time has elapsed after it is turned ON by the paper. |
| Misfeed processing location | • Front door<br>• Stacker unit | | |
| Relevant parts | • Fold exit sensor (PS12)<br>• SD drive board (SDDB)<br>• FS control board (FSCB) | | |

### (2) Procedure

| Step | Action | Control signal | Location of electrical component |
|---|---|---|---|
| 1 | Initial check items | - | - |
| 2 | PS12 I/O check, sensor check | SDDB J9-2 (ON) | SD-511 5-G |
| 3 | Replace SDDB. | - | - |
| 4 | Replace FSCB. | - | - |

- Link to the wiring diagram (N.2.9 FS-534SD)

## 1.10.12 72-43

### (1) Contents

| | | | |
|---|---|---|---|
| JAM type | Misfeed at PK JAM | | |
| JAM code | 72-43 | | |
| JAM detection timing | 72-43 | <When FS-533+PK-519 is installed> | The punch motor sensor (PS202) does not detect rotation of the punch motor after the laps of given time after the punch motor (M201) started operating. |
| | | <When FS-534+PK-520 or FS-534SD+PK-520 is installed> | The punch position sensor (PS2) is not turned OFF (unblocked) after a lapse of a given time after the punch drive motor (M1) starts rotating. |
| Misfeed processing location | • Finisher punch section (When FS-533+PK-519 is installed)<br>• Front door (WhenFS-534+PK-520 or FS-534SD+PK-520 is installed) | | |
| Relevant parts | <When FS-533+PK-519 is installed> | | • Punch motor (M201)<br>• Punch motor sensor (PS202)<br>• PK control board (PKCB)<br>• FS control board (FSCB) |
| | <When FS-534+PK-520 or FS-534SD +PK-520 is installed> | | • Punch drive motor (M1)<br>• Punch position sensor (PS2)<br>• FS control board (FSCB) |

### (2) Procedure

When FS-533+PK-519 is installed

| Step | Action | Control signal | Location of electrical component |
|---|---|---|---|
| 1 | Initial check items | - | - |
| 2 | PS202 I/O check, sensor check | PKCB CN204 | FS-533 (PK-519) 5-C |
| 3 | M201 operation check | PKCB CN203-1 to 2 | FS-533 (PK-519) 4-C |
| 4 | Replace PKCB. | - | - |
| 5 | Replace FSCB. | - | - |

- Link to the wiring diagram (N.2.7 FS-533)

When FS-534+PK-520 or FS-534SD+PK-520 is installed

| Step | Action | Control signal | Location of electrical component |
|---|---|---|---|
| 1 | Initial check items | - | - |
| 2 | PS2 I/O check, sensor check | FSCB J7-2 (ON) | FS-534 (PK-520) 6-K |
| 3 | M1 operation check | FSCB J7-7 to 8 | FS-534 (PK-520) 7-K |
| 4 | Replace FSCB. | - | - |

- Link to the wiring diagram (N.2.8 FS-534)

### 1.10.13 72-70

#### (1) Contents

| | | | |
|---|---|---|---|
| JAM type | Misfeed at PK JAM | | |
| JAM code | 72-70 | | |
| JAM detection timing | 72-70 | <When FS-533+PK-519 is installed> | The paper feed sensor (PS201) is not turned OFF even after the set period of time has elapsed after it is turned ON. |
| Misfeed processing location | Finisher punch section | | |
| Relevant parts | • Fusing motor (M3)<br>• Paper conveyance motor (M101)<br>• Paper feed sensor (PS201)<br>• FS control board (FSCB) | | |

#### (2) Procedure

| Step | Action | Control signal | Location of electrical component |
|---|---|---|---|
| 1 | Initial check items | - | - |
| 2 | PS201 I/O check, sensor check | PKCB CN204 | FS-533 (PK-519) 5-C |
| 3 | M3 operation check | MFPB CN8E-9 (REM)<br>MFPB CN8E-12 (LOCK) | 2-C |
| 4 | M101 operation check | FSCB CN101 | FS-533 6-J |
| 5 | Replace FSCB. | - | - |

- Link to the wiring diagram (N.1. bizhub C368/C308/C258)
- Link to the wiring diagram (N.2.7 FS-533)

### 1.10.14 72-81

#### (1) Contents

| | | | |
|---|---|---|---|
| JAM type | Misfeed at FS staple section | | |
| JAM code | 72-81 | | |
| JAM detection timing | 72-81 | <When FS-533 is installed> | The stapler home sensor (PS110) is not turned ON (blocked) after the stapler motor is energized. |
| Misfeed processing location | Finisher staple section | | |
| Relevant parts | • Stapler home sensor (PS110)<br>• Stapler unit<br>• Stapler relay board (STREYB)<br>• FS control board (FSCB) | | |

#### (2) Procedure

| Step | Action | Control signal | Location of electrical component |
|---|---|---|---|
| 1 | Initial check items | - | - |
| 2 | PS110 I/O check, sensor check | FSCB CN110 | FS-533 8-D to E |
| 3 | Replace the stapler unit. | - | - |
| 4 | Replace STREYB. | - | - |
| 5 | Replace FSCB. | - | - |

- Link to the wiring diagram (N.2.7 FS-533)

### 1.10.15 72-85

#### (1) Contents

| | | | |
|---|---|---|---|
| JAM type | Misfeed at SD transport section | | |
| JAM code | 72-85 | | |
| JAM detection timing | 72-85 | <When FS-534SD is installed> | The SD entrance sensor (PS1) is not turned ON (blocked) even after the set period of time has elapsed after the staple stacker paper detection sensor (PS31) is turned ON by the paper. |

| | |
|---|---|
| Misfeed processing location | • Front door<br>• Stacker unit |
| Relevant parts | • SD entrance sensor (PS1)<br>• Staple stacker paper detection sensor (PS31)<br>• SD drive board (SDDB)<br>• FS control board (FSCB) |

**(2) Procedure**

| Step | Action | Control signal | Location of electrical component |
|---|---|---|---|
| 1 | Initial check items | - | - |
| 2 | PS31 I/O check, sensor check | FSCB J12-11 (ON) | FS-534 6-C |
| 3 | PS1 I/O check, sensor check | SDDB J4-8 (ON) | SD-511 4-B |
| 4 | Replace SDDB. | - | - |
| 5 | Replace FSCB. | - | - |

- Link to the wiring diagram (N.2.8 FS-534)
- Link to the wiring diagram (N.2.9 FS-534SD)

### 1.10.16 72-86

**(1) Contents**

| | | | |
|---|---|---|---|
| JAM type | Misfeed at SD transport section | | |
| Misfeed at JAM code | 72-86 | | |
| JAM detection timing | 72-86 | <When FS-534SD is installed> | • The SD entrance sensor (PS1) is not turned OFF (unblocked) even after the set period of time has elapsed after it is turned ON (blocked).<br>• When paper discharge control motor abnormality occurs during paper trailing edge control movement. |
| Misfeed processing location | Front door | | |
| Relevant parts | • SD entrance sensor (PS1)<br>• Paper discharge control motor (M2)<br>• SD drive board (SDDB)<br>• FS control board (FSCB) | | |

**(2) Procedure**

| Step | Action | Control signal | Location of electrical component |
|---|---|---|---|
| 1 | Initial check items | - | - |
| 2 | PS1 I/O check, sensor check | SDDB J4-8 (ON) | SD-511 4-B |
| 3 | M2 operation check | SDDB J5-4 to 7 | SD-511 3-B |
| 4 | Replace SDDB. | - | - |
| 5 | Replace FSCB. | - | - |

- Link to the wiring diagram (N.2.9 FS-534SD)

### 1.10.17 72-87

**(1) Contents**

| | | | |
|---|---|---|---|
| JAM type | Misfeed at SD transport section | | |
| JAM code | 72-87 | | |
| JAM detection timing | 72-87 | <When FS-534SD is installed> | The center staple/fold stacker paper detect sensor (PS3) is not turned ON even after the set period of time has elapsed after the SD entrance sensor (PS1) is turned ON (blocked) by the paper. |
| Misfeed processing location | • Front door<br>• Stacker unit | | |
| Relevant parts | • SD entrance sensor (PS1)<br>• Center staple/fold stacker paper detect sensor (PS3)<br>• SD drive board (SDDB)<br>• FS control board (FSCB) | | |

**(2) Procedure**

| Step | Action | Control signal | Location of electrical component |
|---|---|---|---|
| 1 | Initial check items | - | - |
| 2 | PS1 I/O check, sensor check | SDDB J4-8 (ON) | SD-511 4-B |
| 3 | PS3 I/O check, sensor check | SDDB J7-12 (ON) | SD-511 5-F |
| 4 | Replace SDDB. | - | - |
| 5 | Replace FSCB. | - | - |

- Link to the wiring diagram (N.2.9 FS-534SD)

### 1.10.18 75-42

#### (1) Contents

| | | | |
|---|---|---|---|
| JAM type | Misfeed at RU section | | |
| JAM code | 75-42 | | |
| JAM detection timing | 75-42 | <When FS-534 or FS-534SD is installed> | The RU entrance sensor (PS2) is not turned ON (blocked) even after the set period of time has elapsed after the copier's paper exit sensor (PS3) is turned OFF (unblocked) by the paper. |
| Misfeed processing location | Horizontal transport cover | | |
| Relevant parts | • Paper exit sensor (PS3)<br>• RU entrance sensor (PS2)<br>• FS control board (FSCB) | | |

#### (2) Procedure

| Step | Action | Control signal | Location of electrical component |
|---|---|---|---|
| 1 | Initial check items | - | - |
| 2 | PS3 I/O check, sensor check | MFPB CN17E-7 (ON) | 5-C |
| 3 | PS2 I/O check, sensor check | FSCB J6-7 (ON) | FS-534 6-K |
| 4 | Replace FSCB. | - | - |

- Link to the wiring diagram (N.1. bizhub C368/C308/C258)
- Link to the wiring diagram (N.2.8 FS-534)

### 1.10.19 75-43

#### (1) Contents

| | | | |
|---|---|---|---|
| JAM type | Misfeed at RU section | | |
| JAM code | 75-43 | | |
| JAM detection timing | 75-43 | <When FS-534 or FS-534SD is installed> | The RU entrance sensor (PS2) is not turned OFF (unlocked) even after the set period of time has elapsed after it is turned ON (blocked). |
| Misfeed processing location | Horizontal transport cover | | |
| Relevant parts | • RU entrance sensor (PS2)<br>• FS control board (FSCB) | | |

#### (2) Procedure

| Step | Action | Control signal | Location of electrical component |
|---|---|---|---|
| 1 | Initial check items | - | - |
| 2 | PS2 I/O check, sensor check | FSCB J6-7 (ON) | FS-534 6-K |
| 3 | Replace FSCB. | - | - |

- Link to the wiring diagram (N.2.8 FS-534)

## 1.11 9#-##

### 1.11.1 92-01, 92-02, 92-40

#### (1) Contents

| | | |
|---|---|---|
| JAM type | Misfeed at duplex pre-registration section | |
| JAM code | 92-01, 92-02, 92-40 | |
| JAM detection timing | 92-01 | The registration sensor (PS1) is not turned ON (unblocked) even after the lapse of a given period of time after a duplex paper feed sequence has been started. |
| | 92-02 | For the second-side feed of paper in the duplex mode, loop forming has not been complete before the second side of a sheet enters the registration roller because the rise timing of load to perform registration is earlier than the rise timing of load to form a loop. |
| | 92-40 | For the second-side feed of paper in the duplex mode, the image write start signal permit continues to be disabled for a predetermined period of time after the timing of the image write start signal output. |
| | - | Paper jam of a sheet of paper left at the duplex pre-registration section results, if a sheet of paper is determined to exist at a position detected when the main power switch is turned ON, a door is opened and closed, or a misfeed or malfunction is reset. |
| Misfeed processing location | Right door | |
| Relevant parts | • Transport motor (M1)<br>• ADU transport clutch (CL6)<br>• Registration sensor (PS1) | |

| | |
|---|---|
| | • Front side board (FRB)<br>• MFP board (MFPB) |

### (2) Procedure

| Step | Action | Control signal | Location of electrical component |
|---|---|---|---|
| 1 | Initial check items | - | - |
| 2 | PS1 I/O check, sensor check | FRB CN8-3 (ON) | 6-L |
| 3 | CL6 operation check | MFPB CN15EA-13 (ON) | 7-C |
| 4 | M1 operation check | MFPB CN8E-3 (REM)<br>MFPB CN8E-6 (LOCK) | 2-C |
| 5 | Replace FRB. | - | - |
| 6 | Replace MFPB. | - | - |

- Link to the wiring diagram (N.1. bizhub C368/C308/C258)

## 1.11.2 93-10

### (1) Contents

| | | |
|---|---|---|
| JAM type | Misfeed at duplex transport section | |
| JAM code | 93-10 | |
| JAM detection timing | 93-10 | The ADU paper passage sensor/2 (PS41) is not turned ON (blocked) even after the set period of time has elapsed after the ADU paper passage sensor/1 (PS40) is turned ON (unblocked) by the paper. |
| | - | Paper jam of a sheet of paper left at the duplex transport section results, if the ADU paper passage sensor/1 (PS40) is turned ON (unblocked) or the ADU paper passage sensor/2 (PS41) is turned ON (blocked) when the main power switch is turned ON, a door is opened and closed, or a misfeed or malfunction is reset. |
| | - | Paper jam of a sheet of paper left at the duplex transport section results, if a sheet of paper is determined to exist at a position detected when the main power switch is turned ON, a door is opened and closed, or a misfeed or malfunction is reset. |
| Misfeed processing location | Right door | |
| Relevant parts | • Transport motor (M1)<br>• ADU transport motor (M5)<br>• ADU transport clutch (CL6)<br>• ADU paper passage sensor/1 (PS40)<br>• ADU paper passage sensor/2 (PS41)<br>• Front side board (FRB)<br>• MFP board (MFPB) | |

### (2) Procedure

| Step | Action | Control signal | Location of electrical component |
|---|---|---|---|
| 1 | Initial check items | - | - |
| 2 | PS40 I/O check, sensor check | MFPB CN17E-10 (ON) | 5-C |
| 3 | PS41 I/O check, sensor check | MFPB CN17E-13 (ON) | 5-C |
| 4 | CL6 operation check | MFPB CN15EA-13 (ON) | 7-C |
| 5 | M1 operation check | MFPB CN8E-3 (REM)<br>MFPB CN8E-6 (LOCK) | 2-C |
| 6 | M5 operation check | MFPB CN17E-1 to 4 | 4-C |
| 7 | MFPB ICP2E conduction check | - | - |
| 8 | Replace FRB. | - | - |
| 9 | Replace MFPB. | - | - |

- Link to the wiring diagram (N.1. bizhub C368/C308/C258)

## 1.11.3 99-01

### (1) Contents

| | | |
|---|---|---|
| JAM type | Controller JAM (paper size error) | |
| JAM code | 99-01 | |
| JAM detection timing | 99-01 | • As a result of a paper size error, the controller transmits a forced stop command to the printer engine and the printer engine is internally processing the size error.<br>• As a result of a paper size error, the controller transmits a forced stop command to the printer engine; but the paper causing the size error cannot be fed out. |
| Misfeed processing location | - | |
| Relevant parts | - | |

**(2) Procedure**

| Step | Action | Control signal | Location of electrical component |
|---|---|---|---|
| 1 | Initial check items | - | - |
| 2 | Open and close the front door of the main body. | - | - |

### 1.11.4 99-02

**(1) Contents**

| | | |
|---|---|---|
| JAM type | Controller JAM (controller forced stop command) | |
| JAM code | 99-02 | |
| JAM detection timing | 99-02 | The controller detects a fault in print sequence. |
| Misfeed processing location | - | |
| Relevant parts | - | |

**(2) Procedure**

| Step | Action | Control signal | Location of electrical component |
|---|---|---|---|
| 1 | Initial check items | - | - |
| 2 | Open and close the front door of the main body. | - | - |

### 1.11.5 99-03

**(1) Contents**

| | | |
|---|---|---|
| JAM type | Controller JAM (image processing) | |
| JAM code | 99-03 | |
| JAM detection timing | 99-03 | Image stabilization not completing a job. |
| Misfeed processing location | - | |
| Relevant parts | - | |

**(2) Procedure**

| Step | Action | Control signal | Location of electrical component |
|---|---|---|---|
| 1 | Initial check items | - | - |
| 2 | Open and close the front door of the main body. | - | - |

### 1.11.6 99-04

**(1) Contents**

| | | |
|---|---|---|
| JAM type | Controller JAM (finisher pre-drive is not completed) | |
| JAM code | 99-04 | |
| JAM detection timing | 99-04 | The finisher pre-drive is not completed even with a print start command received. |
| Misfeed processing location | - | |
| Relevant parts | - | |

**(2) Procedure**

| Step | Action | Control signal | Location of electrical component |
|---|---|---|---|
| 1 | Initial check items | - | - |
| 2 | Open and close the front door of the main body. Or, open and close the front door of the finisher. | - | - |

### 1.11.7 99-05

**(1) Contents**

| | | |
|---|---|---|
| JAM type | Controller JAM (main body not starting a job) | |
| JAM code | 99-05 | |
| JAM detection timing | 99-05 | Paper is not taken up and fed in even with a print start command received.<br>The job is not started even with a print start command received. |
| Misfeed processing location | - | |
| Relevant parts | - | |

**(2) Procedure**

| Step | Action | Control signal | Location of electrical component |
|---|---|---|---|
| 1 | Initial check items | - | - |
| 2 | Open and close the front door of the main body. | - | - |

### 1.11.8 99-06

**(1) Contents**

| | | |
|---|---|---|
| JAM type | Controller JAM (finisher internal processing error) | |
| JAM code | 99-06 | |
| JAM detection timing | 99-06 | Finisher internal control processing is not completed even with the job completed. |
| Misfeed processing location | - | |
| Relevant parts | - | |

**(2) Procedure**

| Step | Action | Control signal | Location of electrical component |
|---|---|---|---|
| 1 | Initial check items | - | - |
| 2 | Open and close the front door of the finisher. | - | - |

### 1.11.9 99-07

**(1) Contents**

| | | |
|---|---|---|
| JAM type | Controller JAM (main body not completing a job) | |
| JAM code | 99-07 | |
| JAM detection timing | 99-07 | The main body does not complete its paper exit operation.<br>Finisher does not complete its paper exit operation. |
| Misfeed processing location | - | |
| Relevant parts | - | |

**(2) Procedure**

| Step | Action | Control signal | Location of electrical component |
|---|---|---|---|
| 1 | Initial check items | - | - |
| 2 | Open and close the front door of the main body. Or, open and close the front door of the finisher. | - | - |

### 1.11.10 99-08

**(1) Contents**

| | | |
|---|---|---|
| JAM type | Controller JAM (finisher not starting a job) | |
| JAM code | 99-08 | |
| JAM detection timing | 99-08 | The finisher does not accept a print start command. |
| Misfeed processing location | - | |
| Relevant parts | - | |

**(2) Procedure**

| Step | Action | Control signal | Location of electrical component |
|---|---|---|---|
| 1 | Initial check items | - | - |
| 2 | Open and close the front door of the main body. Or, open and close the front door of the finisher. | - | - |

### 1.11.11 99-09

**(1) Contents**

| | | |
|---|---|---|
| JAM type | Controller JAM (finisher not completing a job) | |
| JAM code | 99-09 | |
| JAM detection timing | 99-09 | • A paper exit or paper finishing process inside the finisher is not completed.<br>• The finisher does not start during a reset procedure from the jam. |
| Misfeed processing location | - | |

| | |
|---|---|
| Relevant parts | - |

### (2) Procedure

| Step | Action | Control signal | Location of electrical component |
|---|---|---|---|
| 1 | Initial check items | - | - |
| 2 | Open and close the front door of the main body. Or, open and close the front door of the finisher. | - | - |

# 2. MALFUNCTION CODE

## 2.1 Display procedure

- The machine's CPU performs a self-diagnostics function that, on detecting a malfunction, gives the corresponding warning code and maintenance call mark on the control panel.
- Touching the maintenance call mark will display the corresponding warning code on the state confirm screen.

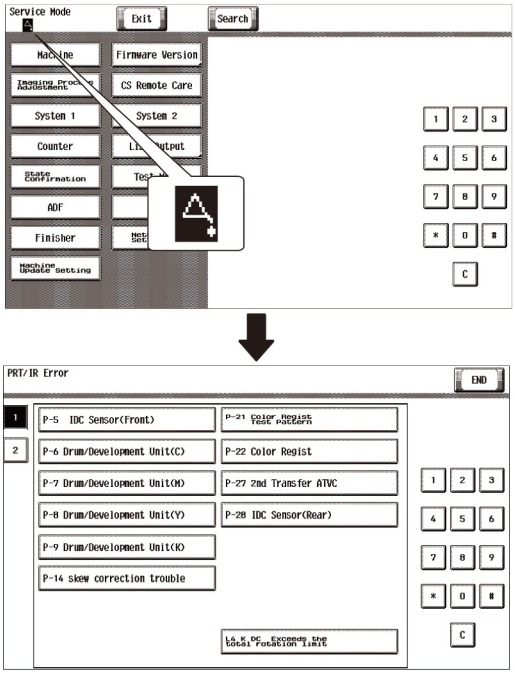


## 2.2 List of the malfunction code

- If an image stabilization or scanner fault occurs, the corresponding warning code appears.

| Code | Item |
|---|---|
| S-1 | CCD gain adjustment failure |
| S-2 | CIS gain adjustment failure * |
| D-1 | Split line detect (front side) |
| D-3 | Split line detect (back side) * |
| P-5 | IDC sensor/Fr failure |
| P-28 | IDC sensor/Rr failure |
| P-6 | Drum/Development unit (C) failure |
| P-7 | Drum/Development unit (M) failure |
| P-8 | Drum/Development unit (Y) failure |
| P-9 | Drum/Development unit (K) failure |
| P-14 | Skew correction trouble |
| P-21 | Color regist test pattern failure |
| P-22 | Color regist adjust failure |
| P-27 | Secondary transfer ATVC failure |
| P-33 | LD malfunction |

- *: only when DF-704 is installed

## 2.3 S-1

### 2.3.1 Contents

| | |
|---|---|
| Malfunction type | CCD gain adjustment failure |
| Malfunction code | S-1 |
| Malfunction detection timing | It is detected that the CCD clamp gain adjustment value is faulty. |
| Relevant parts | • LED exposure unit<br>• Scanner drive board (SCDB)<br>• CCD board (CCDB)<br>• MFP board (MFPB) |

### 2.3.2 Procedure

1. Correct the harness connection between CCDB CN3-MFPB CN1 if faulty.
2. Check for possible extraneous light and correct as necessary.
3. Clean the lens, mirrors, CCD surface, and shading sheet if dirty.

4. Correct reflective mirror of the scanner if faulty, or change scanner mirror.
5. Replace CCDB.
6. Replace SCDB.
7. Replace MFPB.

## 2.4 S-2

### 2.4.1 Contents

| | |
|---|---|
| Malfunction type | CIS gain adjustment failure (only when DF-704 is installed) |
| Malfunction code | S-2 |
| Malfunction detection timing | It is detected that the CIS clamp gain adjustment value is faulty. |
| Relevant parts | • CIS module (CIS)<br>• Dual scan image processing board (DSIPB)<br>• MFP board (MFPB) |

### 2.4.2 Procedure

1. Correct the harness connection between CIS and DSIPB if faulty.
2. Correct the harness connection between DSIPB CN01-MFPB CN22 if faulty.
3. Check for possible extraneous light and correct as necessary.
4. Wipe clean the back side scanning glass surface and shading sheet.
5. Replace CIS.
6. Replace DSIPB.
7. Replace MFPB.

## 2.5 D-1

### 2.5.1 Contents

| | | |
|---|---|---|
| Malfunction type | Split line detect (front side) | |
| Malfunction code | D-1 | |
| Malfunction detection timing | • While recovering from the power save mode or when the main power switch and power key are ON, it detects whether or not stain exist at the document reading glass when the DF is closed. This warning will be displayed if the original is set to DF when stain exist.<br>• The thin line detection level and the warning display can be changed by [Service Mode] -> [System 2] -> [ADF Scan Glass Contamin. Set.] -> [Front Side]. | |
| Relevant parts | <When DF-629 is installed> | • Glass cleaning motor (M4)<br>• Document reading glass cleaning sensor (PS12)<br>• DF control board (DFCB) |
| | <When DF-704 is installed> | • Document reading glass cleaning motor (M6)<br>• Document reading glass cleaning sensor (PS13)<br>• DF control board (DFCB) |

### 2.5.2 Procedure

When DF-629 is installed

1. Wipe clean the document reading glass surface.
2. Check the glass cleaning roller unit for proper installation and correct if necessary.
   Clean the glass cleaning roller unit if dirty.
3. Select [Service Mode] -> [System 2] ->[ADF Scan Glass Contamin. Set.] -> [Front Side], and change the setting.
4. Check the DFCB connector for proper connection and correct as necessary.
5. M4 operation check.
6. Replace the glass cleaning roller unit.
7. Replace DFCB.

When DF-704 is installed

1. Wipe clean the document reading glass surface.
2. Check the front side glass cleaning roller unit for proper installation and correct if necessary.
   Clean the front side glass cleaning roller unit if dirty.
3. Select [Service Mode] -> [System 2] ->[ADF Scan Glass Contamin. Set.] -> [Front Side], and change the setting.
4. Check the DFCB connector for proper connection and correct as necessary.
5. M6 operation check
6. Replace the front side glass cleaning roller unit.
7. Replace DFCB.

## 2.6 D-3

### 2.6.1 Contents

| | |
|---|---|
| Malfunction type | Split line detect (back side) (only when DF-704 is installed) |
| Malfunction code | D-3 |
| Malfunction detection timing | • While recovering from the power save mode or when the main power switch and power key are ON, it detects whether or not stain exist at the back side original scanning section (CIS) when the DF is closed. This warning will be displayed if the original is set to DF when stain exist.<br>• The thin line detection level and the warning display can be changed by [Service Mode] -> [System 2] -> [ADF Scan Glass Contamin. Set.] -> [Back Side]. |

| | |
|---|---|
| Relevant parts | • CIS module (CIS)<br>• CIS power supply (CISPU)<br>• Dual scan image processing board (DSIPB) |

### 2.6.2 Procedure

1. Wipe clean the CIS glass surface.
2. Check the back side glass cleaning roller unit for proper installation and correct if necessary.
   Clean the back side glass cleaning roller unit if dirty.
3. If there is a problem in the CIS module connection, correct the faulty connection.
4. Replace CIS.
5. Replace CISPU.
6. Replace DSIPB.

## 2.7 P-5, P-28

### 2.7.1 Contents

| | |
|---|---|
| Malfunction type | IDC sensor/Fr failure, IDC sensor/Rr failure |
| Malfunction code | P-5, P-28 |
| Malfunction detection timing | • During IDC sensor light intensity correction, output voltage detected for all eight sample patterns are 3.35 V or more.<br>• During IDC sensor light intensity correction, sensor output voltage for light intensity selected after the correction is under 0.7 V.<br>• During IDC base surface detective control, sensor output voltage detected is under 0.7 V or over 3.35V.<br>• During image stabilization (gamma correction control), detected output value for IDC sensor did not go below threshold (half the value of what is detected by IDC sensor on the belt surface) for three consecutive times (position of the pattern end is not detected).<br>• During image stabilization (gamma correction control), sensor's output value of each color for hyper 0 gradation after the primary approximation is half the detection level on the belt surface or under. |
| Relevant parts | • IDC sensor/Fr (IDCS/Fr)<br>• IDC sensor/Rr (IDCS/Rr)<br>• IDC sensor shutter solenoid (SD2)<br>• High voltage unit (HV)<br>• Image Transfer Belt Unit |

### 2.7.2 Procedure

1. Wipe clean the surface of the transfer belt with a soft cloth, if it is dirty.
2. Replace the transfer belt unit if the transfer belt is damaged.
3. Reinstall or reconnect IDCS/Fr assy or IDCS/Rr assy, sensor shutter or connector, if it is installed or connected improperly.
4. Clean IDCS/Fr or IDCS/Rr if it is dirty.
5. Check the HV connector for proper connection and correct as necessary.
6. SD2 operation check.
7. Open/close the front door, run an image stabilization sequence, and select [State Confirmation] -> [Level History 1] to check the IDC value.

| | |
|---|---|
| IDC1 | IDCS/Fr |
| IDC2 | IDCS/Rr |

   If the value is 1.0 V or less, replace IDCS/Fr or IDCS/Rr.
8. Replace MFPB.

## 2.8 P-6, P-7, P-8, P-9

### 2.8.1 Contents

| | |
|---|---|
| Malfunction type | Drum/Development unit (C) failure, Drum/Development unit (M) failure, Drum/Development unit (Y) failure, Drum/Development unit (K) failure |
| Malfunction code | P-6, P-7, P-8, P-9 |
| Malfunction detection timing | • All density readings taken from the density pattern produced on the transfer belt are 1.0 g/m$^2$ (IDC sensor photo receiver output) or less during max. density adjustment (Vg/Vdc adjustment).<br>• All density readings taken from the density pattern produced on the transfer belt are 5.0 g/m$^2$ (IDC sensor photo receiver output) and more during max. density adjustment (Vg/Vdc adjustment). |
| Relevant parts | • Drum unit/Y,M,C,K<br>• Developing unit/Y,M,C,K<br>• IDC sensor/Fr (IDCS/Fr)<br>• IDC sensor/Rr (IDCS/Rr)<br>• IDC sensor shutter solenoid (SD2)<br>• MFP board (MFPB)<br>• High voltage unit (HV)<br>• Transfer belt unit |

### 2.8.2 Procedure

1. Select [Imaging Process Adjustment] -> [Max Image Density Adj] and, if the setting value is negative, readjust.
2. Check the drive transmission portion of the drum/developing unit and correct as necessary.
3. Clean the IDC sensor/Fr (IDCS/Fr) or IDC sensor/Rr (IDCS/Rr) window if dirty.

4. Clean the contact of the drum/developing unit connector if dirty.
5. Check the HV connector for proper connection and correct as necessary.
6. SD2 operation check.
7. Replace the drum unit.
8. Replace the developing unit.
9. Replace the transfer belt unit.
10. Replace HV.
11. Replace MFPB.

## 2.9 P-14

### 2.9.1 Contents

| | |
|---|---|
| Malfunction type | Skew correction trouble |
| Malfunction code | P-14 |
| Malfunction detection timing | The difference between the skew default position setting value and the cumulative amount of skew adjustment values goes over the predetermined value. |
| Relevant parts | • IDC sensor/Fr (IDCS/Fr)<br>• IDC sensor/Rr (IDCS/Rr)<br>• Drum unit/Y,M,C,K<br>• PH relay board (PHRYB)<br>• Front side board (FRB)<br>• MFP board (MFPB)<br>• PH unit |

### 2.9.2 Procedure

1. Check the drive transmission portion of the drum unit and correct as necessary.
2. Clean the contact of the drum unit connector if dirty.
3. Reinstall or reconnect IDCS/Fr assy or IDCS/Rr assy, sensor shutter or connector, if it is installed or connected improperly.
4. Clean IDCS/Fr or IDCS/Rr if it is dirty.
5. Check the FRB connector for proper connection and correct as necessary.
6. Check the PHRYB connector for proper connection and correct as necessary.
7. Check the connectors of the MFPB for proper connection and correct as necessary.
8. FRB fuse conduction check.
9. Replace FRB.
10. Replace IDCS/Fr assy or IDCS/Rr assy.
11. Replace the drum unit.
12. Replace the PH unit.
13. Replace PHRYB.
14. Replace MFPB

**NOTE**

- **After the PH unit is replaced, reset the skew default position for each color in [Service Mode] -> [Machine] -> [Print Head Skew Adj.] -> [Print Head Skew Adj.]**
- **When this alert code is displayed, according to the list, take actions to address the problem. After the problem is resolved, select [Service Mode] -> [Machine] -> [Print Head Skew Adj.] -> [Print Head Skew Reset] and perform the skew adjustment reset.**

## 2.10 P-21

### 2.10.1 Contents

| | |
|---|---|
| Malfunction type | Color regist test pattern failure |
| Malfunction code | P-21 |
| Malfunction detection timing | • During pre-pattern detection, pre-pattern edge (start/ end point of effective area) is not detected within the pre-pattern search area.<br>• During detection of regist pattern at vertical/horizontal direction, pattern edge (start/end point of effective area) is not detected within the pattern search area of each unit. |
| Relevant parts | • Transfer belt unit<br>• PH unit<br>• IDC sensor shutter solenoid (SD2)<br>• Front side board (FRB)<br>• MFP board (MFPB) |

### 2.10.2 Procedure

1. Wipe clean the surface of the transfer belt with a soft cloth, if it is dirty.
2. Replace the transfer belt unit if the transfer belt is damaged.
3. SD2 operation check.
4. Replace the PH unit.
5. Replace FRB.
6. Replace MFPB.

## 2.11 P-22

### 2.11.1 Contents

| | |
|---|---|
| Malfunction type | Color regist adjust failure |

| | |
|---|---|
| Malfunction code | P-22 |
| Malfunction detection timing | • The gap between maximum and minimum value of deviations among each color (the values before averaging) is over the predetermined value.<br>• Average deviation exceeds the predetermined value.<br>• In case the final value of the deviation after stabilization exceeds the predetermined value, it is regarded as failure even if the average deviation is within tolerance. |
| Relevant parts | • IDC sensor/Fr (IDCS/Fr)<br>• IDC sensor/Rr (IDCS/Rr)<br>• IDC sensor shutter solenoid (SD2)<br>• Front side board (FRB)<br>• MFP board (MFPB) |

### 2.11.2 Procedure

1. Slide out the drum/developing unit and reinstall it in position.
2. Reinstall or reconnect IDCS/Fr assy or IDCS/Rr assy if it is installed or connected improperly.
3. Check the vertical transport guide for installed position and correct as necessary.
4. SD2 operation check.
5. Replace FRB.
6. Replace MFPB.

## 2.12 P-27

### 2.12.1 Contents

| | |
|---|---|
| Malfunction type | Secondary transfer ATVC failure |
| Malfunction code | P-27 |
| Malfunction detection timing | An abnormal average value is detected during an adjustment of the second transfer ATVC value. |
| Relevant parts | • High voltage unit (HV)<br>• MFP board (MFPB)<br>• Image transfer entrance guide<br>• 2nd transfer assy<br>• Transfer belt unit |

### 2.12.2 Procedure

1. Check the contact between the roller opposed to the 2nd transfer roller in the transfer belt unit and the grounding terminal. Clean the joint or correct if necessary.
2. Check the image transfer entrance guide for proper installation and correct if necessary.
3. Check that the spring does not come off during the pressure operation of the 2nd transfer roller and correct if necessary.
4. Check the contact at the joint of the 2nd transfer assy and HV. Clean the joint or correct if necessary.
5. Replace the transfer belt unit.
6. Replace HV.
7. Replace MFPB.

## 2.13 P-33

### 2.13.1 Contents

| | |
|---|---|
| Malfunction type | LD malfunction |
| Malfunction code | P-33 |
| Malfunction detection timing | The DETOUT signal of the LD drive detected malfunction consecutively for the predetermined frequency. |
| Relevant parts | • Laser diode/Y (LD/Y)<br>• Laser diode/M (LD/M)<br>• Laser diode/C (LD/C)<br>• Laser diode/K (LD/K)<br>• Laser drive board (LDDB)<br>• PH unit<br>• PH relay board (PHRYB)<br>• MFP board (MFPB) |

### 2.13.2 Procedure

1. Replace the PH unit.
2. Replace PHRYB.
3. Replace MFPB.

# 3. TROUBLE CODE

## 3.1 Display procedure

- The machine's CPU performs a self-diagnostics function that, on detecting a malfunction, gives the corresponding malfunction code on the control panel.

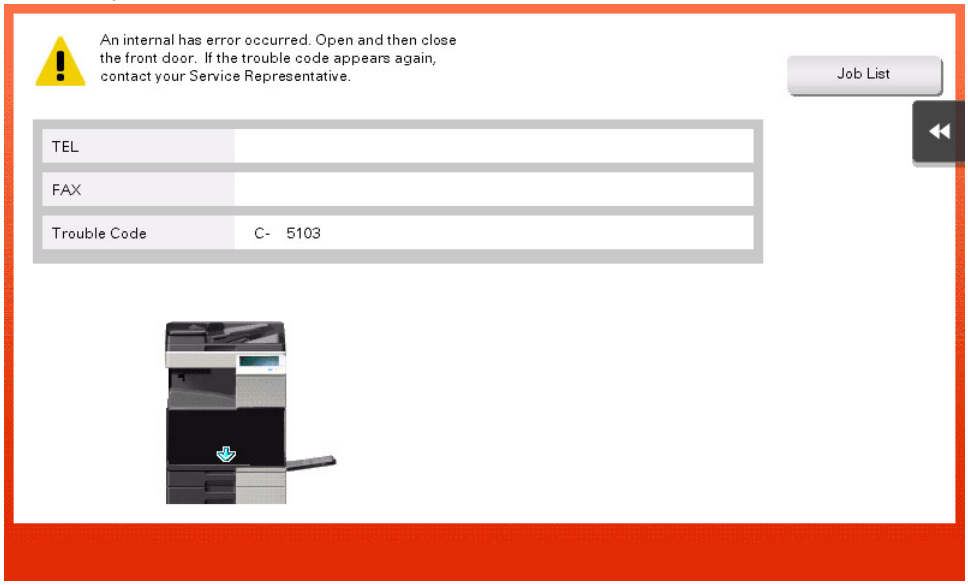


## 3.2 Trouble resetting procedure

- Different malfunction resetting procedures apply depending on the rank of the trouble code.

* List of malfunction resetting procedures

| Trouble code rank | Resetting procedures |
|---|---|
| Rank A | Trouble reset: Refer to the Trouble resetting procedure by Trouble Reset key. |
| Rank B | Opening/closing the front door<br>Trouble reset:<br>When the [internal error. auto cancel] for rank B is set to "Yes", after the set period of time, trouble is automatically cleared. |
| Rank C | Turning main power switch OFF/ON<br>Trouble reset:<br>When the [internal error. auto cancel] for rank C is set to "Yes", after the set period of time, trouble is restarted and cleared. |

### 3.2.1 Trouble resetting procedure by Trouble Reset key

#### (1) Use

- If the all troubles occur and the status would not be cleared by turning main power switch OFF and ON again, or opening and closing the front door, clear the status of the machine.
- To be used when the status would not be cleared by turning main power switch OFF and ON again, or opening and closing the front door in case of a trouble.

#### (2) Procedure

1. Turn OFF the main power switch.
2. Turn main power switch ON while pressing the Reset key.
3. Touch [Trouble Reset].
4. Check to make sure that [OK] is displayed and it has been reset.
5. After turning off the main power switch, turn it on again more than 10 seconds after and check if the machine starts correctly.

### 3.2.2 Trouble resetting procedure by the auto cancel function

#### (1) Use

- When rank B or C trouble occurs, main body automatically clears trouble and makes the main body ready for use.
  When the trouble auto cancel function is enabled, upon the occurrence of trouble to be automatically cleared, the trouble detection message is displayed on the screen and the trouble is automatically cleared. If the trouble remains after performing the auto cancel operation 3 times, the normal trouble code display screen appears.

#### (2) Procedure

1. Select [Yes] for the trouble rank to which the trouble auto cancel operation is applied in [Service Mode] -> [System 2] -> [▶] -> [Internal Error. Auto Cancel]. (The default setting for rank B and rank C are set to [Yes].)
2. Touch [OK], and turning main power switch OFF and ON again.

### 3.2.3 Trouble resetting procedure by remote operation

#### (1) Use

- Trouble can be cleared by remote operation using the applications or CS Remote Care system.
- The combinations of the applications to be used and the ranks of trouble to be cleared are shown below.

| Trouble code rank / Application | Rank A | Rank B | Rank C |
|---|---|---|---|
| PageScope Web Connection | Cannot be cleared | Can be cleared | Can be cleared |
| OpenAPI (PageScope Enterprise Suite) | Cannot be cleared | Can be cleared | Can be cleared |
| CS Remote Care (Excluding communications by fax modem) | Can be cleared | Can be cleared | Can be cleared |

#### (2) Procedure

##### (a) PageScope Web Connection

1. Access the PageScope Web Connection of the MFP where trouble occurs.
2. The screen for logging into Administrator Mode appears.
3. Check the following message appears; “An error has occurred. Do you want to clear the error?” Click [Trouble Reset].
4. Click [Trouble Reset] again in the confirmation screen.
5. Check that the MFP starts normally.

##### (b) OpenAPI (PageScope Enterprise Suite)

1. Access PageScope Enterprise Suite.
2. Select [Device List] -> [Device Management] -> [Device List] -> [Device List] -> [Device].
3. For rank B trouble, click [Trouble Reset]. For rank C trouble, click [Reset].
4. For rank B trouble, click the [Execute] button.
   For rank C trouble, click the [Execute] button in [Device Reset].
5. Check that the MFP starts normally.

##### (c) CS Remote Care

- Refer to the CS Remote Care Center manual.

## 3.3 Trouble isolation function

- The trouble isolation function enables you to control MFP temporarily isolating faulty units and options where the trouble isolation function can be applied when trouble occurs. This allows you to continue using the other units that are not affected and reduce down time that continues until CE resolves the problem.
- This function can be selected for the following units and options.
  - Tray 1
  - Tray 2
  - Tray 3
  - Tray 4
  - LCT
  - Manual
  - Center Stapling
  - Half-Fold
  - Tri-Fold
  - Punch
  - Stapling
  - Scanner
  - ADF
  - Expansion Function (HDD)
- If a problem occurs with the units where the trouble isolation function can be applied, the control panel displays a trouble code and a key with which you decide whether to continue using the MFP. When you press down the key, the control panel displays the units that will be isolated as well as the next confirmation key with which you decide to continue.
- When you press down the confirmation key, the message on the control panel asks you to turn OFF and ON the main power switch. After turning OFF and ON the main power switch, the MFP starts operating, isolating the faulty units. The message on the control panel also tells that the MFP is working, isolating the faulty units.
- To temporarily isolate faulty units and continue using the MFP with the trouble isolation function, be sure to make the above mentioned control panel operation. The faulty units cannot be automatically isolated.

**NOTE**

- **The malfunction detection mechanism is not applied to units and options that are being isolated.**

## 3.4 List of the trouble code

| Code | Item | Rank |
|---|---|---|
| C0002 | Paper feed communication error | C |
| C0106 | Tray 3/LCC paper feed motor turning at abnormal timing (When PC-110, PC-210 or PC-410 is installed) | B |
| C0107 | Tray 3/LCC vertical transport motor turning at abnormal timing (When PC-110, PC-210 or PC-410 is installed) | B |
| C0108 | Tray 4 paper feed motor turning at abnormal timing (When PC-210 is installed) | B |
| C0109 | Tray 4 vertical transport motor turning at abnormal timing (When PC-210 is installed) | B |

| Code | Item | Rank |
|---|---|---|
| C0202 | Tray 1 feeder up/down abnormality | B |
| C0204 | Tray 2 feeder up/down abnormality | B |
| C0206 | Tray 3 lift-up failure (When PC-110 or PC-210 is installed) | B |
| C0208 | Tray 4 lift-up failure (When PC-210 is installed) | B |
| C0210 | LCC lift failure (When PC-410 is installed) | B |
| C0211 | Manual feed up/down abnormality | B |
| C0214 | LCC shift failure (When PC-410 is installed) | B |
| C0216 | LCT up/down abnormality (When LU-302 is installed) | B |
| C1004 | FNS communication error (When FS-533, FS-534, FS-534SD or JS-506 is installed) | C |
| C1081 | SD communication error (When FS-534SD is installed) | C |
| C1102 | Main tray up/down motor drive malfunction (When FS-533, FS-534 or FS-534SD is installed) | B |
| C1103 | Alignment plate motor/Fr malfunction (When FS-533, FS-534 or FS-534SD is installed) | B |
| C1105 | Bundle eject motor drive malfunction (When FS-534 or FS-534SD is installed) | B |
| C1106 | Stapler movement motor malfunction (When FS-533, FS-534 or FS-534SD is installed) | B |
| C1109 | Stapler motor drive malfunction (When FS-533, FS-534 or FS-534SD is installed) | B |
| C1112 | Stapler motor malfunction (When FS-534SD is installed) | B |
| C1113 | Center-staple lead edge stopper motor malfunction (When FS-534SD is installed) | B |
| C1114 | Center-staple front adjust drive motor malfunction (When FS-534SD is installed) | B |
| C1115 | Center-staple knife drive motor malfunction (When FS-534SD is installed) | B |
| C1132 | Punch drive motor malfunction (When FS-533+PK-519, FS-534+PK-520 or FS-534SD+PK-520 is installed) | B |
| C1140 | Alignment plate motor/Rr malfunction (When FS-533, FS-534 or FS-534SD is installed) | B |
| C1141 | Paddle motor drive malfunction (When FS-534 or FS-534SD is installed) | B |
| C1144 | Pre-eject drive motor malfunction (When FS-534 or FS-534SD is installed) | B |
| C1145 | Trailing edge stopper motor malfunction (When FS-534 or FS-534SD is installed) | B |
| C1156 | SD paddle motor malfunction (When FS-534SD is installed) | B |
| C1182 | Shift motor drive malfunction (When JS-506 is installed) | B |
| C1184 | Paper discharge control motor malfunction (When FS-534 or FS-534SD is installed) | B |
| C1195 | Paper discharge control motor malfunction (When FS-534SD is installed) | B |
| C1196 | Center fold roller motor malfunction (When FS-534SD is installed) | B |
| C1197 | Tri-folding guide motor malfunction (When FS-534SD is installed) | B |
| C11A1 | Exit roller pressure/ retraction malfunction (When FS-533 is installed) | B |
| C11A2 | Accommodation roller pressure/ retraction malfunction (When FS-534 or FS-534SD is installed) | B |
| C11E1 | Paper exit switching drive malfunction (When FS-534 or FS-534SD is installed) | B |
| C1402 | FS nonvolatile memory error (When FS-533 is installed) | C |
| C2152 | Transfer belt fault at initial position return | B |
| C2153 | Transfer belt spacing fault at K pressure switching | B |
| C2154 | Transfer belt contact fault at all pressure switching | B |
| C2155 | Transfer belt contact fault after K pressure established | B |
| C2156 | Transfer belt spacing fault after all pressure established | B |
| C2253 | PC motor failure to turn | B |
| C2254 | PC motor turning at abnormal timing | B |
| C2255 | Developing motor failure to turn | B |
| C2256 | Developing motor turning at abnormal timing | B |
| C2355 | Transfer belt cleaner cooling fan failure to turn | B |
| C2411 | Developing unit/C new article release | B |
| C2412 | Developing unit/M new article release | B |
| C2413 | Developing unit/Y new article release | B |
| C2414 | Developing unit/K new article release | B |
| C2551 | Abnormally low toner density detected cyan TCR sensor | B |
| C2552 | Abnormally high toner density detected cyan TCR sensor | B |
| C2553 | Abnormally low toner density detected magenta TCR sensor | B |
| C2554 | Abnormally high toner density detected magenta TCR sensor | B |
| C2555 | Abnormally low toner density detected yellow TCR sensor | B |

| Code | Item | Rank |
|---|---|---|
| C2556 | Abnormally high toner density detected yellow TCR sensor | B |
| C2557 | Abnormally low toner density detected black TCR sensor | B |
| C2558 | Abnormally high toner density detected black TCR sensor | B |
| C2559 | Cyan TCR sensor adjustment failure | B |
| C255A | Magenta TCR sensor adjustment failure | B |
| C255B | Yellow TCR sensor adjustment failure | B |
| C255C | Black TCR sensor adjustment failure | B |
| C2561 | Cyan TCR sensor failure | B |
| C2562 | Magenta TCR sensor failure | B |
| C2563 | Yellow TCR sensor failure | B |
| C2564 | Black TCR sensor failure | B |
| C2650 | Main backup media access error | C |
| C2A11 | Drum unit/C new release failure | B |
| C2A12 | Drum unit/M new release failure | B |
| C2A13 | Drum unit/Y new release failure | B |
| C2A14 | Drum unit/K new release failure | B |
| C2A21 | Toner cartridge/C new release failure | C |
| C2A22 | Toner cartridge/M new release failure | C |
| C2A23 | Toner cartridge/Y new release failure | C |
| C2A24 | Toner cartridge/K new release failure | C |
| C3101 | Pressure roller pressure failure | B |
| C3103 | Pressure roller release failure | B |
| C3201 | Fusing motor failure to turn | B |
| C3202 | Fusing motor turning at abnormal timing | B |
| C3302 | Paper cooling fan failure to turn | B |
| C3425 | Fusing warm-up trouble | A |
| C3722 | Fusing abnormally high temperature detection (Edge of the heating roller) | A |
| C3725 | Fusing abnormally high temperature detection (Main of the heating side) | A |
| C3726 | Fusing abnormally high temperature detection (Center of the heating side) | A |
| C3731 | Fusing abnormally high temperature detection (Hard protector) | A |
| C3825 | Fusing abnormally low temperature detection (Main of the heating roller) | A |
| C3826 | Fusing abnormally low temperature detection (Center of the heating roller) | A |
| C3922 | Fusing sensor wire breaks detection (Edge of the heating roller) | A |
| C3925 | Fusing sensor wire breaks detection (Main of the heating roller) | A |
| C3926 | Fusing sensor wire breaks detection (Center of the heating roller) | A |
| C392A | Heating roller temperature sensor contamination (Main of the heating roller) | A |
| C392B | Fusing sensor wire breaks detection (Center of the heating roller) | A |
| C4091 | I/F communication error | C |
| C40A1 | Mechanical controller sub-CPU communication error | C |
| C40A2 | Mechanical controller PF communication data error | C |
| C40A3 | Mechanical controller PF transmission timeout | C |
| C40A4 | Mechanical controller PF communication pulse error | C |
| C4101 | Polygon motor rotation trouble | B |
| C4501 | Laser malfunction | B |
| C5102 | Transport motor failure to turn | B |
| C5103 | Transport motor turning at abnormal timing | B |
| C5351 | Power supply cooling fan motor failure to turn | B |
| C5355 | Toner cartridge cooling fan failure to turn | B |
| C5360 | Clean unit fan failure to turn (When CU-101 is installed) | B |
| C5370 | Rear side cooling fan failure to turn | C |
| C5501 | AC signal abnormality | C |
| C5601 | Engine control malfunction | C |
| C5603 | Front side communication error | C |
| C5604 | PH configuration fault | C |
| C5605 | Engine communication data error | C |
| C5606 | Engine transmission timeout | C |
| C5610 | PH LD drive communication error | C |
| C5611 | PH EEPROM communication error | C |

| Code | Item | Rank |
|---|---|---|
| C6001 | DF related configuration error 1 | C |
| C6002 | DF related configuration error 2 | C |
| C6102 | Drive system home sensor malfunction | B |
| C6103 | Slider over running | B |
| C6104 | Back side cleaning home sensor abnormality (initial) (When DF-704 is installed) | B |
| C6105 | Back side cleaning home sensor abnormality (normal) (When DF-704 is installed) | B |
| C6704 | Image input time out | C |
| C6751 | CCD clamp/gain adjustment failure | B |
| C6752 | ASIC clock input error (front side) | C |
| C6753 | ASIC clock input error (back side) (When DF-704 is installed) | C |
| C6754 | CIS clamp adjustment failure (When DF-704 is installed) | B |
| C6755 | CIS gain adjustment failure (When DF-704 is installed) | B |
| C6756 | CCD power-supply voltage malfunction | C |
| C6901 | DSC board mount failure 1 (When SC-508 is installed) | C |
| C6902 | DSC board bus check NG1-1 (When SC-508 is installed) | C |
| C6903 | DSC board bus check NG1-2 (When SC-508 is installed) | C |
| C6911 | DSC board mount failure 2 (When DF-704 + SC-508 is installed) | C |
| C6912 | DSC board bus check NG2-1 (When DF-704 + SC-508 is installed) | C |
| C6913 | DSC board bus check NG2-2 (When DF-704 + SC-508 is installed) | C |
| C6F01 | Scanner sequence trouble 1 | C |
| C6F02 | Scanner sequence trouble 2 | C |
| C6F03 | Scanner sequence trouble 3 | C |
| C6F04 | Scanner sequence trouble 4 | C |
| C6F05 | Scanner sequence trouble 5 | C |
| C6F06 | Scanner sequence trouble 6 | C |
| C6F07 | Scanner sequence trouble 7 | C |
| C6F08 | Scanner sequence trouble 8 | C |
| C6F09 | Scanner sequence trouble 9 | C |
| C6F10 | Scanner sequence trouble 10 | C |
| C6FDC | Scanner sequence trouble DC | B |
| C6FDD | Scanner sequence trouble DD | B |
| C8101 | Before reading pressure welding alienation mechanism (When DF-629 or DF-704 is installed) | B |
| C8107 | Glass cleaning mechanism trouble (When DF-629 or DF-704 is installed) | B |
| C8302 | Cooling fan trouble (When DF-629 or DF-704 is installed) | B |
| C8401 | Data flash failure | C |
| C9401 | Exposure LED lighting failure | A |
| C9402 | Exposure LED lighting abnormally | A |
| C9403 | CIS LED lighting failure (When DF-704 is installed) | A |
| C9404 | CIS LED lighting abnormally (When DF-704 is installed) | A |
| CA051 | Standard controller configuration failure | C |
| CA052 | Controller hardware error | C |
| CA053 | Controller start failure | C |
| CB001 | FAX board error 1 | C |
| CB002 | FAX board error 2 | C |
| CB003 | FAX board error 3 | C |
| CB051 | FAX board mount failure line 1 | C |
| CB052 | FAX board mount failure line 2 | C |
| CB110 | Instance generation error or observer registration error | C |
| CB111 | Configuration space initialization NG | C |
| CB112 | Semaphore acquisition, release error | C |
| CB113 | Sequence error among main body tasks | C |
| CB114 | Message queue control error | C |
| CB115 | Main body - sequence error among FAX boards | C |
| CB116 | FAX board nonresponse (Nonresponse after initialization) | C |
| CB117 | ACK waiting timeout error | C |
| CB118 | Receiving undefined frame | C |
| CB119 | DMA transfer error | C |

| Code | Item | Rank |
|---|---|---|
| CB120 | JC soft error | C |
| CB122 | Device error (modem-DAA initialization error) | C |
| CB123 | Device error (modem-DAA power save recovery error) | C |
| CB125 | ISW failure of SubCPU | C |
| CB126 | Timeout error due to nonresponse from DC during suspension process | C |
| CB127 | Timeout error due to nonresponse from CC during suspension process | C |
| CB128 | Timeout error due to nonresponse from LINE during suspension process | C |
| CB129 | Timeout error due to nonresponse from SPI tasks during suspension process | C |
| CB130 | Driver soft error | C |
| CB131 | Reception frame length error from main | C |
| CB132 | Reception frame header error from main | C |
| CB133 | 232C i/f sequence error | C |
| CB134 | DPRAM i/f sequence error | C |
| CB135 | DPRAM CTL/STL register error | C |
| CB136 | ACK waiting timeout | C |
| CB137 | DPRAM RESET reception | C |
| CB139 | No modem response during execution of voice response | C |
| CB140 | MSG I/F Error with JC | C |
| CB141 | I/F error with driver | C |
| CB142 | Undefined command reception | C |
| CB143 | Command frame length error | C |
| CB144 | Command parameter length error | C |
| CB145 | Undefined parameter | C |
| CB146 | Command/response sequence error | C |
| CB150 | External class instance acquisition error | C |
| CB151 | Job start error (Starting job parameter error/child job generation error) | C |
| CB152 | Doc access error (Report buf access error) | C |
| CB153 | Response wait timeout from external task | C |
| CB154 | Internal que table control error (create/enque/deque) | C |
| CB160 | Instance generation error | C |
| CB161 | Timeout error | C |
| CB162 | Interface error | C |
| CB163 | Message que control error | C |
| CB164 | Semaphore acquisition release error | C |
| CB165 | Observer registration error | C |
| CB166 | Reception resource check error | C |
| CB167 | Deployment error of sending image information | C |
| CB168 | Serialization error of receiving image | C |
| CB169 | Access error to quick memory data | C |
| CB170 | Internal que table control error (create/enque/deque) | C |
| CB171 | Instance generation error | C |
| CB172 | Timeout error | C |
| CB173 | Interface error | C |
| CB174 | Semaphore acquisition release error | C |
| CB175 | Observer registration error | C |
| CB176 | Unable to check TTI domain | C |
| CB177 | Error return from TTI rasterizer | C |
| CB178 | Receiving job generation error | C |
| CB179 | Sequence control error | C |
| CB180 | Access error to quick sending memory data | C |
| CB181 | BlockBuff acquisition error | C |
| CB182 | Sending block image error (Req, restore) | C |
| CB183 | Receiving block image error (Req, store) | C |
| CB184 | Storage error of receiving image information | C |
| CB185 | Receiving data size logic error (Receiving data are not multiples of dotline) | C |
| CB186 | Image buf acquisition (alloc) error | C |
| CB187 | Error return from compressor | C |
| CB188 | BandBuf control error (newInstance/get/free) | C |

| Code | Item | Rank |
|---|---|---|
| CB190 | USB IF error (OS notifies an error during configuration setting after recovery from the sleep or attach.) | C |
| CB191 | USB IF error (EndPoint1: Bulk Out (command, transmitted image data)) (error retry 1 min. timeout) | C |
| CB192 | USB IF error (EndPoint2: Bulk In (response, received image data)) (error retry 5 sec. timeout) | C |
| CB193 | USB IF error (EndPoint3: Interrupt In (fax board status)) (error retry 1 min. timeout) | C |
| CB194 | USB IF error (EndPoint4: Bulk Out (main body status)) (error retry 3 sec. timeout) | C |
| CB195 | USB IF error (Attach not detected for 1 min. after recovery from sleep) | C |
| CB196 | USB IF error (Detach not detected for 1 min. after recovery from sleep) | C |
| CC140 | Trouble related to security | C |
| CC151 | ROM contents error upon startup (MSC) | C |
| CC152 | ROM contents error upon startup (IR) | C |
| CC155 | Finisher ROM error (When FS-533, FS-534, FS-534SD or JS-506 is installed) | C |
| CC156 | DF ROM error (When DF-629 or DF-704 is installed) | C |
| CC159 | ROM contents error upon startup (DSC1) | C |
| CC15A | ROM contents error upon startup (DSC2) | C |
| CC15B | Flash ROM error (saddle) (When FS-534SD is installed) | C |
| CC15C | Engine Flash ROM writing error | C |
| CC163 | ROM contents error (PRT) | C |
| CC164 | ROM contents error (MSC) | C |
| CC170 | Dynamic link error during starting (AP0) | C |
| CC171 | Dynamic link error during starting (AP1) | C |
| CC172 | Dynamic link error during starting (AP2) | C |
| CC173 | Dynamic link error during starting (AP3) | C |
| CC174 | Dynamic link error during starting (AP4) | C |
| CC180 | Dynamic link error during starting (LDR) | C |
| CC181 | Dynamic link error during starting (IBR) | C |
| CC182 | Dynamic link error during starting (IID) | C |
| CC183 | Dynamic link error during starting (IPF) | C |
| CC184 | Dynamic link error during starting (IMY) | C |
| CC185 | Dynamic link error during starting (SPF) | C |
| CC186 | Dynamic link error during starting (OAP) | C |
| CC190 | Outline font load error | C |
| CC191 | Setting parameter load error (LDR) | C |
| CC211 | Authentication device general error | C |
| CC212 | User validation error | C |
| CC213 | User registration error/Card information setting error | C |
| CC214 | User information deletion error | C |
| CC216 | Acquisition failure of the number of trials/Initialize error of number of authentication | C |
| CD002 | JOB RAM save error | C |
| CD004 | Hard disk access error (connection failure) | C |
| CD00F | Hard disk data transfer error | C |
| CD010 | Hard disk unformat | C |
| CD011 | Hard disk out of specifications mounted | C |
| CD012 | Mount error due to hard disk being unformatted | C |
| CD013 | HDD mirroring error master | A |
| CD014 | HDD mirroring error slave | A |
| CD015 | HDD mirroring error master slave | A |
| CD016 | HDD mirroring error master (rebuild) | A |
| CD017 | HDD mirroring error slave (rebuild) | A |
| CD020 | Hard disk verify error | C |
| CD030 | Hard disk management information reading error | C |
| CD041 | HDD command execution error | C |
| CD042 | | C |
| CD043 | | C |
| CD044 | | C |
| CD045 | | C |
| CD046 | | C |

| Code | Item | Rank |
|---|---|---|
| CD047 | HDD SCSI library error | C |
| CD048 | | C |
| CD049 | | C |
| CD04A | | C |
| CD04B | | C |
| CD050 | Hard disk recovery timeout | C |
| CD110 | Wireless LAN destination initialization error | C |
| CD201 | File memory mounting error | C |
| CD202 | Memory capacity discrepancy | C |
| CD203 | Memory capacity discrepancy 2 | C |
| CD211 | PCI-SDRAM DMA operation failure | C |
| CD212 | Compression/extraction timeout detection | C |
| CD241 | Encryption ASIC setting error | C |
| CD242 | Encryption ASIC mounting error | C |
| CD252 | No relay circuit boards for IC-416 mounting at IC-416 mount setting | C |
| CD261 | USB host board failure | C |
| CD262 | Extension network adapter installation error | C |
| CD271 | i-Option activated and additional memory not installed | C |
| CD272 | i-Option activated and additional memory and HDD not installed | C |
| CD390 | Nonvolatile data checksum error | C |
| CD391 | Nonvolatile data save error (eMMC) | - |
| CD392 | Nonvolatile data save error (EEPROM) | C |
| CD3A0 | Counter error | C |
| CD401 | NACK command incorrect | C |
| CD402 | ACK command incorrect | C |
| CD403 | Checksum error | C |
| CD404 | Receiving packet incorrect | C |
| CD405 | Receiving packet analysis error | C |
| CD406 | ACK receiving timeout | C |
| CD407 | Retransmission timeout | C |
| CD411 | Touch panel board error | C |
| CD412 | Touch panel type mismatch | C |
| CD413 | Electrostatic touch panel operation mode error | C |
| CD601 | Trouble related to security | - |
| CD602 | | |
| CD603 | | |
| CD701 | Mechanical controller flash ROM writing error | C |
| CD702 | Mechanical controller flash ROM device error | C |
| CD703 | FW download communication fault | C |
| CD704 | Finisher Flash ROM device error (When FS-533, FS-534, FS-534SD or JS-506 is installed) | C |
| CD705 | Mechanical controller sub-CPU flash ROM device error | C |
| CD706 | Mechanical controller sub-CPU flash ROM error | C |
| CDC## | Trouble related to security | - |
| CDF50 | ASIC image version failure | C |
| CDF51 | ASIC image version failure (back side) (When DF-704 is installed) | C |
| CDF70 | ASIC image access failure | C |
| CDF71 | ASIC image access failure (back side) (When DF-704 is installed) | C |
| CDFA0 | ASIC image error | C |
| CDFA1 | ASIC image error (back side) (When DF-704 is installed) | C |
| CE001 | Abnormal message queue | C |
| CE002 | Message and method parameter failure | C |
| CE003 | Task error | C |
| CE004 | Event error | C |
| CE005 | Memory access error | C |
| CE006 | Header access error | C |
| CE007 | DIMM initialize error | C |
| CE101 | Browser finish detected | C |

| Code | Item | Rank |
|---|---|---|
| CE201 | Transmission operation log storage fault | C |
| CE301 | Referring incorrect memory | C |
| CE302 | Incorrect command | C |
| CE303 | Finished due to error inside Qt library | C |
| CE304 | Finished due to error outside Qt library | C |
| CE305 | Program forced to stop | C |
| CED01 | The authentication application information does not exist in the hard disk/eMMC board in the enhanced server authentication state. | C |
| CEEE1 | MFP board (MSC) malfunction | C |
| CEEE2 | Scanner section malfunction | A |
| CEEE3 | MFP board (ENG) malfunction | A |
| CF### | Trouble code (CF###) is referred to as abort code.<br>For details of abort code, refer to “K.4. ABORT CODE”. | C |

## 3.5 C0###

### 3.5.1 C0002

#### (1) Contents

| | |
|---|---|
| Trouble type | C0002: Paper feed communication error |
| Rank | C |
| Trouble detection condition | When the MFP board (MFPB) is receiving data, a communication error is detected. |
| Trouble isolation | - |
| Relevant electrical parts | • MFP board (MFPB)<br>• PC control board (PCCB) |

#### (2) Procedure

1. Turn OFF the main power switch, disconnect and then connect the power cord. Wait for 10 sec. or more after connect the power cord, and turn ON the main power switch.
2. Correct or replace the harness connection between the main body and the paper feed cabinet if faulty.
3. Rewrite the firmware.
4. Replace PCCB. (PC-110/PC-210/PC-410)
5. Replace MFPB.

NOTICE
- Link to the layout drawings for related parts by each trouble code (S.1. C0002)

### 3.5.2 C0106

#### (1) Contents

| | |
|---|---|
| Trouble type | C0106: Tray 3/LCC paper feed motor turning at abnormal timing (When PC-110, PC-210 or PC-410 is installed) |
| Rank | B |
| Trouble detection condition | • The motor lock signal remains HIGH for a predetermined continuous period of time while the motor is turning.<br>• The motor lock signal remains LOW for a predetermined continuous period of time while the motor remains stationary. |
| Trouble isolation | - |
| Relevant electrical parts | <When PC-110 or PC-210 is installed><br>• Tray 3 paper feed motor (M111)<br>• PC control board (PCCB) |
| | <When PC-410 is installed><br>• Paper feed motor (M131)<br>• PC control board (PCCB) |

#### (2) Procedure

##### (a) When PC-110 or PC-210 is installed

1. Check the connector between M111-PCCB CN5 for proper connection and correct as necessary.
2. Check the connector of M111 for proper drive coupling and correct as necessary.
3. M111 operation check
   - Control signal: PCCB CN5-5 (CW/CCW)
   - Location of electrical component: PC-110/PC-210 4-C
4. Replace M111.
5. Replace PCCB.

NOTICE
- Link to the wiring diagram (N.2.3 PC-110)
- Link to the wiring diagram (N.2.4 PC-210)
- Link to the layout drawings for related parts by each trouble code (S.2.1 PC-110/PC-210)

#### (b) When PC-410 is installed

1. Check the connector between M131-PCCB CN5 for proper connection and correct as necessary.
2. Check the connector of M131 for proper drive coupling and correct as necessary.
3. M131 operation check
   - Control signal: PCCB CN5-5 (CW/CCW)
   - Location of electrical component: PC-410 4-J
4. Replace M131.
5. Replace PCCB.

NOTICE
- Link to the wiring diagram (N.2.5 PC-410)
- Link to the layout drawings for related parts by each trouble code (S.2.2 PC-410)

### 3.5.3 C0107

#### (1) Contents

| | |
|---|---|
| Trouble type | C0107: Tray 3/LCC vertical transport motor turning at abnormal timing (When PC-110, PC-210 or PC-410 is installed) |
| Rank | B |
| Trouble detection condition | • The motor lock signal remains HIGH for a predetermined continuous period of time while the motor is turning.<br>• The motor lock signal remains LOW for a predetermined continuous period of time while the motor remains stationary. |
| Trouble isolation | - |
| Relevant electrical parts | <When PC-110 or PC-210 is installed><br>• Tray 3 vertical transport motor (M112)<br>• PC control board (PCCB) |
| | <When PC-410 is installed><br>• Vertical transport motor (M132)<br>• PC control board (PCCB) |

#### (2) Procedure

##### (a) When PC-110 or PC-210 is installed

1. Check the connector between M112-PCCB CN5 for proper connection and correct as necessary.
2. Check the connector of M112 for proper drive coupling and correct as necessary.
3. M112 operation check
   - Control signal: PCCB CN5-13 (CW/CCW)
   - Location of electrical component: PC-110/PC-210 3 to 4-C
4. Replace M112.
5. Replace PCCB.

NOTICE
- Link to the wiring diagram (N.2.3 PC-110)
- Link to the wiring diagram (N.2.4 PC-210)
- Link to the layout drawings for related parts by each trouble code (S.3.1 PC-110/PC-210)

##### (b) When PC-410 is installed

1. Check the connector between M132-PCCB CN5 for proper connection and correct as necessary.
2. Check the connector of M132 for proper drive coupling and correct as necessary.
3. M132 operation check
   - Control signal: PCCB CN5-13 (CW/CCW)
   - Location of electrical component: PC-410 4-J
4. Replace M132.
5. Replace PCCB.

NOTICE
- Link to the wiring diagram (N.2.5 PC-410)
- Link to the layout drawings for related parts by each trouble code (S.3.2 PC-410)

### 3.5.4 C0108

#### (1) Contents

| | |
|---|---|
| Trouble type | C0108: Tray 4 paper feed motor turning at abnormal timing (When PC-210 is installed) |
| Rank | B |
| Trouble detection condition | • The motor lock signal remains HIGH for a predetermined continuous period of time while the motor is turning.<br>• The motor lock signal remains LOW for a predetermined continuous period of time while the motor remains stationary. |
| Trouble isolation | - |
| Relevant electrical parts | • Tray 4 paper feed motor (M121)<br>• PC control board (PCCB) |

#### (2) Procedure

1. Check the connector between M121-PCCB CN9 for proper connection and correct as necessary.
2. Check the connector of M121 for proper drive coupling and correct as necessary.
3. M121 operation check

1. Control signal: PCCB CN9-5 (CW/CCW)
2. Location of electrical component: PC-210 6-K

4. Replace M121.
5. Replace PCCB.

NOTICE
- Link to the wiring diagram (N.2.4 PC-210)
- Link to the layout drawings for related parts by each trouble code (S.4. C0108)

### 3.5.5 C0109

#### (1) Contents

| | |
|---|---|
| Trouble type | C0109: Tray 4 vertical transport motor turning at abnormal timing (When PC-210 is installed) |
| Rank | B |
| Trouble detection condition | • The motor lock signal remains HIGH for a predetermined continuous period of time while the motor is turning.<br>• The motor lock signal remains LOW for a predetermined continuous period of time while the motor remains stationary. |
| Trouble isolation | - |
| Relevant electrical parts | • Tray 4 vertical transport motor (M122)<br>• PC control board (PCCB) |

#### (2) Procedure

1. Check the connector between M122-PCCB CN9 for proper connection and correct as necessary.
2. Check the connector of M122 for proper drive coupling and correct as necessary.
3. M122 operation check
   - Control signal: PCCB CN9-13 (CW/CCW)
   - Location of electrical component: PC-210 6-K
4. Replace M122.
5. Replace PCCB.

NOTICE
- Link to the wiring diagram (N.2.4 PC-210)
- Link to the layout drawings for related parts by each trouble code (S.5. C0109)

### 3.5.6 C0202

#### (1) Contents

| | |
|---|---|
| Trouble type | C0202: Tray 1 feeder up/down abnormality |
| Rank | B |
| Trouble detection condition | The tray 1 upper limit sensor (PS25) is not turned ON (blocked) even after the set period of time has elapsed after the paper lift-up operation for the drawer began. |
| Trouble isolation | Tray 1 |
| Relevant electrical parts | • Tray 1 lift-up motor (M12)<br>• Tray 1 upper limit sensor (PS25)<br>• MFP board (MFPB) |

#### (2) Procedure

1. Remove the tray and check to see if a piece of paper is not left inside the machine.
2. Check the connector between M12-MFPB CN19E for proper connection and correct as necessary.
3. Check the connector of M12 for proper drive coupling and correct as necessary.
4. Check the connector between PS25-relay CN30-MFPB CN26E for proper connection and correct as necessary.
5. PS25 I/O check, sensor check
   - Control signal: MFPB CN26E-3 (ON)
   - Location of electrical component: 25-C
6. M12 operation check
   - Control signal: MFPB CN19E-5 (REM)
   - Location of electrical component: 21-C
7. Replace M12.
8. Replace MFPB.

NOTICE
- Link to the wiring diagram (N.1. bizhub C368/C308/C258)
- Link to the layout drawings for related parts by each trouble code (S.6. C0202)

### 3.5.7 C0204

#### (1) Contents

| | |
|---|---|
| Trouble type | C0204: Tray 2 feeder up/down abnormality |
| Rank | B |
| Trouble detection condition | The tray 2 upper limit sensor (PS22) is not turned ON (blocked) even after the set period of time has elapsed after the paper lift-up operation for the drawer began. |
| Trouble isolation | Tray 2 |
| Relevant electrical parts | • Tray 2 lift-up motor (M13)<br>• Tray 2 upper limit sensor (PS22) |

| | |
|---|---|
| | • MFP board (MFPB) |

**(2) Procedure**

1. Remove the tray and check to see if a piece of paper is not left inside the machine.
2. Check the connector between M13-MFPB CN25E for proper connection and correct as necessary.
3. Check the connector of M13 for proper drive coupling and correct as necessary.
4. Check the connector between PS22-relay CN40-MFPB CN23E for proper connection and correct as necessary.
5. PS22 I/O check, sensor check
   - Control signal: MFPB CN23E-9 (ON)
   - Location of electrical component: 27-C
6. M13 operation check
   - Control signal: MFPB CN25E-5 (REM)
   - Location of electrical component: 22-C
7. Replace M13.
8. Replace MFPB.

NOTICE
- Link to the wiring diagram (N.1. bizhub C368/C308/C258)
- Link to the layout drawings for related parts by each trouble code (S.7. C0204)

### 3.5.8 C0206

**(1) Contents**

| | |
|---|---|
| Trouble type | C0206: Tray 3 lift-up failure (When PC-110 or PC-210 is installed) |
| Rank | B |
| Trouble detection condition | The tray 3 upper limit sensor (PS116) is not turned ON (blocked) even after the set period of time has elapsed after the paper lift-up operation for the drawer began. |
| Trouble isolation | Tray 3 |
| Relevant electrical parts | • Tray 3 lift-up motor (M113)<br>• Tray 3 upper limit sensor (PS116)<br>• PC control board (PCCB)<br>• MFP board (MFPB) |

**(2) Procedure**

1. Remove the tray and check to see if a piece of paper is not left inside the machine.
2. Check the connector between M113-PCCB CN6 for proper connection and correct as necessary.
3. Check the connector of M113 for proper drive coupling and correct as necessary.
4. Check the connector between PS116-relay CN24-PCCB CN4 for proper connection and correct as necessary.
5. PS116 I/O check, sensor check
   - Control signal: PCCB CN4-3 (ON)
   - Location of electrical component: PC-110/PC-210 7-C
6. M113 operation check
   - Control signal: PCCB CN6-8 to 9
   - Location of electrical component: PC-110/PC-210 2-C
7. Replace M113.
8. Replace PCCB.
9. Replace MFPB.

NOTICE
- Link to the wiring diagram (N.2.3 PC-110)
- Link to the wiring diagram (N.2.4 PC-210)
- Link to the layout drawings for related parts by each trouble code (S.8. C0206)

### 3.5.9 C0208

**(1) Contents**

| | |
|---|---|
| Trouble type | C0208: Tray 4 lift-up failure (When PC-210 is installed) |
| Rank | B |
| Trouble detection condition | The tray 4 upper limit sensor (PS126) is not turned ON (blocked) even after the set period of time has elapsed after the paper lift-up operation for the drawer began. |
| Trouble isolation | Tray 4 |
| Relevant electrical parts | • Tray 4 lift-up motor (M123)<br>• Tray 4 upper limit sensor (PS126)<br>• PC control board (PCCB)<br>• MFP board (MFPB) |

**(2) Procedure**

1. Remove the tray and check to see if a piece of paper is not left inside the machine.
2. Check the connector between M123-PCCB CN8 for proper connection and correct as necessary.
3. Check the connector of M123 for proper drive coupling and correct as necessary.
4. Check the connector between PS126-relay CN47-PCCB CN7 for proper connection and correct as necessary.
5. PS126 I/O check, sensor check
   - Control signal: PCCB CN7-3 (ON)
   - Location of electrical component: PC-210 8-K

6. M123 operation check
   - Control signal: PCCB CN8-8 to 9
   - Location of electrical component: PC-210 5-K
7. Replace M123.
8. Replace PCCB.
9. Replace MFPB.

NOTICE
- Link to the wiring diagram (N.2.4 PC-210)
- Link to the layout drawings for related parts by each trouble code (S.9. C0208)

### 3.5.10 C0210

#### (1) Contents

| | |
|---|---|
| Trouble type | C0210: LCC lift failure (When PC-410 is installed) |
| Rank | B |
| Trouble detection condition | • The main tray upper limit sensor (PS136) is not turned ON (blocked) even after the set period of time has elapsed after the paper lift-up operation for the drawer began.<br>• The shifter stop / lower limit position sensor (PS138) is not turned OFF (unblocked) even after the set period of time has elapsed after the paper lift-up operation for the drawer began.<br>• The main tray upper limit sensor (PS136) is not turned ON (blocked) even after the set period of time has elapsed after the paper lift-up operating.<br>• The main tray upper limit sensor (PS136) is not turned OFF (unblocked) even after the set period of time has elapsed after the paper lift-down operation began.<br>• The shifter stop / lower limit position sensor (PS138) is not turned ON (blocked) even after the set period of time has elapsed after the paper lift-down operation began. |
| Trouble isolation | LCT |
| Relevant electrical parts | • Main tray upper limit sensor (PS136)<br>• Shifter stop / lower limit position sensor (PS138)<br>• Elevator motor (M134)<br>• PC control board (PCCB) |

#### (2) Procedure

1. Remove the tray and check to see if a piece of paper is not left inside the machine.
2. Check the connector between M134-PCCB CN10 for proper connection and correct as necessary.
3. Check the connector of M134 for proper drive coupling and correct as necessary.
4. Check the connector between PS136-relay CN1-PCCB CN4 for proper connection and correct as necessary.
5. Check the connector between PS138-relay CN16-PCCB CN14 for proper connection and correct as necessary.
6. PS136 I/O check, sensor check
   - Control signal: PCCB CN4-3 (ON)
   - Location of electrical component: PC-410 8-J
7. PS138 I/O check, sensor check
   - Control signal: PCCB CN14-6 (ON)
   - Location of electrical component: PC-410 3-J
8. M134 operation check
   - Control signal: PCCB CN10-1 to 2
   - Location of electrical component: PC-410 6-J
9. Replace M134.
10. PRCB ICP2 conduction check
11. Replace PCCB.

NOTICE
- Link to the wiring diagram (N.2.5 PC-410)
- Link to the layout drawings for related parts by each trouble code (S.10. C0210)

### 3.5.11 C0211

#### (1) Contents

| | |
|---|---|
| Trouble type | C0211: Manual feed up/down abnormality |
| Rank | B |
| Trouble detection condition | • Paper is not turned OFF (unblock) the bypass lift-up position sensor (PS26) even after the transport motor (M1) rotates for a given period of time after the position is switched from stand by position at lift-up plate to the feed position.<br>• The bypass lift-up position sensor (PS26) is not turned ON (blocked) even after the transport motor (M1) rotates for a given period of time after the position is switched from stand by position at lift-up plate to the feed position. |
| Trouble isolation | Manual |
| Relevant electrical parts | • Transport motor (M1)<br>• Bypass pick-up solenoid (SD1)<br>• Bypass lift-up position sensor (PS26)<br>• MFP board (MFPB) |

#### (2) Procedure

1. Check the connector between M1-MFPB CN8E for proper connection and correct as necessary.
2. Check the connector of M1 for proper drive coupling and correct as necessary.

3. Check the connector between PS26-relay CN19-MFPB CN18E for proper connection and correct as necessary.
4. Check the connector between SD1-relay CN21-relay CN19-MFPB CN18E for proper connection and correct as necessary.
5. PS26 I/O check, sensor check
   - Control signal: MFPB CN18E-13 (ON)
   - Location of electrical component: 22-J
6. SD1 operation check
   - Control signal: MFPB CN18E-10 (ON)
   - Location of electrical component: 22-J
7. M1 operation check
   - Control signal: MFPB CN8E-3 (REM), MFPB CN8E-6 (LOCK)
   - Location of electrical component: 2-C
8. Replace M1.
9. MFPB ICP3E conduction check
10. Replace MFPB.

NOTICE
- Link to the wiring diagram (N.1. bizhub C368/C308/C258)
- Link to the layout drawings for related parts by each trouble code (S.11. C0211)

### 3.5.12 C0214

#### (1) Contents

| | |
|---|---|
| Trouble type | C0214: LCC shift failure (When PC-410 is installed) |
| Rank | B |
| Trouble detection condition | • The shifter stop / lower limit position sensor (PS138) is not turned ON (blocked) even after the set period of time has elapsed after the shift operation began (shift to the right).<br>• The shifter home sensor (PS139) is not turned OFF (unblocked) even after the set period of time has elapsed after the shift operation began (shift to the right).<br>• The shifter stop / lower limit position sensor (PS138) is not turned OFF (unblocked) even after the set period of time has elapsed after the return operation began (shift to the left).<br>• The shifter home sensor (PS139) is not turned ON (blocked) even after the set period of time has elapsed after the return operation began (shift to the left). |
| Trouble isolation | LCT |
| Relevant electrical parts | • Shifter stop / lower limit position sensor (PS138)<br>• Shifter home sensor (PS139)<br>• Shifter motor (M133)<br>• PC control board (PCCB) |

#### (2) Procedure

1. Remove the tray and check to see if a piece of paper is not left inside the machine.
2. Check the connector between M133-PCCB CN10 for proper connection and correct as necessary.
3. Check the connector of M133 for proper drive coupling and correct as necessary.
4. Check the connector between PS138-relay CN16-PCCB CN14 for proper connection and correct as necessary.
5. Check the connector between PS139-relay CN16-PCCB CN14 for proper connection and correct as necessary.
6. PS138 I/O check, sensor check
   - Control signal: PCCB CN14-6 (ON)
   - Location of electrical component: PC-410 3-J
7. PS139 I/O check, sensor check
   - Control signal: PCCB CN14-3 (ON)
   - Location of electrical component: PC-410 4-J
8. M133 operation check
   - Control signal: PCCB CN10-3 to 4
   - Location of electrical component: PC-410 6-J
9. Replace M133.
10. PRCB ICP2 conduction check
11. Replace PCCB.

NOTICE
- Link to the wiring diagram (N.2.5 PC-410)
- Link to the layout drawings for related parts by each trouble code (S.12. C0214)

### 3.5.13 C0216

#### (1) Contents

| | |
|---|---|
| Trouble type | C0216: LCT up/down abnormality (When LU-302 is installed) |
| Rank | B |
| Trouble detection condition | The upper limit sensor (PS2) is not turned ON (blocked) even after the set period of time has elapsed after the paper lift-up operation for the drawer began. |
| Trouble isolation | LCT |
| Relevant electrical parts | • Upper limit sensor (PS2)<br>• Lift-up motor (M1)<br>• LU drive board (LUDB) |

#### (2) Procedure

1. Check the connector between M1-LUDB CN3 for proper connection and correct as necessary.

2. Check the connector of M1 for proper drive coupling and correct as necessary.
3. Check the connector between PS2-relay CN3-LUDB CN5 for proper connection and correct as necessary.
4. PS2 I/O check, sensor check
   - Control signal: LUDB CN5-3 (ON)
   - Location of electrical component: LU-302 4-G
5. M1 operation check
   - Control signal: LUDB CN3-4 (ON)
   - Location of electrical component: LU-302 3-G
6. Replace M1.
7. Replace LUDB.

NOTICE
- Link to the wiring diagram (N.2.6 LU-302)
- Link to the layout drawings for related parts by each trouble code (S.13. C0216)

## 3.6 C1###

### 3.6.1 C1004

#### (1) Contents

| | |
|---|---|
| Trouble type | C1004: FNS communication error (When FS-533, FS-534, FS-534SD or JS-506 is installed) |
| Rank | C |
| Trouble detection condition | <When FS-533, FS-534 or FS-534SD is installed><br>• When the FS control board (FSCB) is receiving data, a communication error is detected. |
| | <When JS-506 is installed><br>• When the JS control board (JSCB) is receiving data, a communication error is detected. |
| Trouble isolation | - |
| Relevant electrical parts | <When FS-533, FS-534 or FS-534SD is installed><br>• FS control board (FSCB) |
| | <When JS-506 is installed><br>• JS control board (JSCB) |

#### (2) Procedure

##### (a) When FS-533, FS-534 or FS-534SD is installed

1. Turn OFF the main power switch, disconnect and then connect the power cord. Wait for 10 sec. or more after connect the power cord, and turn ON the main power switch.
2. Rewrite the firmware.
3. Replace FSCB. (FS-533/FS-534/FS-534SD)

##### (b) When JS-506 is installed

1. Turn OFF the main power switch, disconnect and then connect the power cord. Wait for 10 sec. or more after connect the power cord, and turn ON the main power switch.
2. Rewrite the firmware.
3. Replace JSCB.

NOTICE
- Link to the layout drawings for related parts by each trouble code (S.14. C1004, CC155, CD704)

### 3.6.2 C1081

#### (1) Contents

| | |
|---|---|
| Trouble type | C1081: SD communication error (When FS-534SD is installed) |
| Rank | C |
| Trouble detection condition | When a communication error is detected between the FS control board (FSCB) and the SD control board (SDDB). |
| Trouble isolation | Center Stapling/Half-Fold/Tri-Fold |
| Relevant electrical parts | • SD drive board (SDDB)<br>• FS control board (FSCB) |

#### (2) Procedure

1. Turn OFF the main power switch, disconnect and then connect the power cord. Wait for 10 sec. or more after connect the power cord, and turn ON the main power switch.
2. Rewrite the firmware.
3. Replace SDDB.
4. Replace FSCB.

NOTICE
- Link to the layout drawings for related parts by each trouble code (S.15. C1081)

### 3.6.3 C1102

#### (1) Contents

| | |
|---|---|
| Trouble type | C1102: Main tray up/down motor drive malfunction (When FS-533, FS-534 or FS-534SD is installed) |
| Rank | B |

| | |
|---|---|
| Trouble detection condition | <When FS-533 is installed><br>• While the exit tray is being lifted, the paper exit tray home sensor (PS107) is not turned OFF (unblocked) after the set period of time has elapsed after the tray lift up motor (M109) is turned ON.<br>• While the exit tray is being lowered, the paper exit tray home sensor (PS107) is not turned ON (blocked) after the set period of time has elapsed after the tray lift up motor (M109) is turned ON. |
| | <When FS-534 or FS-534SD is installed><br>• While the exit tray is being lifted, the main tray upper position sensor (PS26/PS27) is not turned ON (blocked) and the main tray upper position detect switch (SW2) is not turned ON, even after the main tray up/down motor (M11) turns by the set number of times.<br>• While the exit tray is being lowered, the main tray full detection sensor (PS29) is not turned ON (blocked) after the set period of time has elapsed after the main tray up/down motor (M11) is turned ON. |
| Trouble isolation | - |
| Relevant electrical parts | <When FS-533 is installed><br>• Tray lift up motor (M109)<br>• Paper exit tray home sensor (PS107)<br>• FS control board (FSCB) |
| | <When FS-534 or FS-534SD is installed><br>• Main tray up/down motor (M11)<br>• Main tray upper position sensor/R (PS26)<br>• Main tray upper position sensor/F (PS27)<br>• Main tray full detection sensor (PS29)<br>• Main tray upper position detect switch (SW2)<br>• FS control board (FSCB) |

### (2) Procedure

#### (a) When FS-533 is installed

1. Check the connector between M109-FSCB CN108 for proper connection and correct as necessary.
2. Check the connector of M109 for proper drive coupling, and correct as necessary.
3. Check the connector between PS107-FSCB CN110 for proper connection and correct as necessary.
4. PS107 I/O check, sensor check
   - Control signal: FSCB CN110
   - Location of electrical component: FS-533 7-D to E
5. M109 operation check
   - Control signal: FSCB CN108
   - Location of electrical component: FS-533 10-E
6. Replace M109.
7. FSCB CP109 conduction check
8. Replace FSCB.

NOTICE
- Link to the wiring diagram (N.2.7 FS-533)
- Link to the layout drawings for related parts by each trouble code (S.16.1 FS-533)

#### (b) When FS-534 or FS-534SD is installed

1. Check the motor, sensor and switch connectors for proper connection, and correct as necessary.
2. Check the connector of M11 for proper drive coupling, and correct as necessary.
3. PS26 I/O check, sensor check
   - Control signal: FSCB J14<A>-5 (ON)
   - Location of electrical component: FS-534 2-C
4. PS27 I/O check, sensor check
   - Control signal: FSCB J14<B>-6 (ON)
   - Location of electrical component: FS-534 3-C
5. PS29 I/O check, sensor check
   - Control signal: FSCB J14<A>-8 (ON)
   - Location of electrical component: FS-534 4-C
6. SW2 operation check
   - Control signal: FSCB J10-1 to 2
   - Location of electrical component: FS-534 8-K
7. M11 operation check
   - Control signal: FSCB J9<A>-9 to 10
   - Location of electrical component: FS-534 10-C to D
8. Replace M11.
9. Replace FSCB.

NOTICE
- Link to the wiring diagram (N.2.8 FS-534)
- Link to the layout drawings for related parts by each trouble code (S.16.2 FS-534/FS-534SD)

## 3.6.4 C1103

### (1) Contents

| | |
|---|---|
| Trouble type | C1103: Alignment plate motor/Fr malfunction (When FS-533, FS-534 or FS-534SD is installed) |
| Rank | B |
| Trouble detection condition | <When FS-533 is installed><br>• The alignment plate home sensor/F (PS108) is not turned OFF (unblocked) after the set period of time has elapsed after the plate drive starts from the home position. |

| | |
|---|---|
| | • The alignment plate home sensor/F (PS108) is not turned ON (blocked) after the set period of time has elapsed after the alignment motor/F (M105) is turned ON to return the plate to the home position. |
| | <When FS-534 or FS-534SD is installed><br>• The alignment plate/F home sensor (PS12) is not turned OFF (unblocked) after the set period of time has elapsed after the plate drive starts from the home position.<br>• The alignment plate/F home sensor (PS12) is not turned ON (blocked) after the set period of time has elapsed after the alignment motor/Front (M7) is turned ON to return the plate to the home position.<br>• The alignment plate/F does not reach the specified position within the set period of time. |
| Trouble isolation | - |
| Relevant electrical parts | <When FS-533 is installed><br>• Alignment motor/F (M105)<br>• Alignment plate home sensor/F (PS108)<br>• FS control board (FSCB) |
| | <When FS-534 or FS-534SD is installed><br>• Alignment motor/Front (M7)<br>• Alignment plate/F home sensor (PS12)<br>• FS control board (FSCB) |

### (2) Procedure

#### (a) When FS-533 is installed

1. Check the connector between M105-FSCB CN102 for proper connection and correct as necessary.
2. Check the connector of M105 for proper drive coupling, and correct as necessary.
3. Check the connector between PS108-FSCB CN102 for proper connection and correct as necessary.
4. PS108 I/O check, sensor check
   - Control signal: FSCB CN102
   - Location of electrical component: FS-533 7-J
5. M105 operation check
   - Control signal: FSCB CN102
   - Location of electrical component: FS-533 7-J
6. Replace M105.
7. FSCB CP105 conduction check
8. Replace FSCB.

NOTICE
- Link to the wiring diagram (N.2.7 FS-533)
- Link to the layout drawings for related parts by each trouble code (S.17.1 FS-533)

#### (b) When FS-534 or FS-534SD is installed

1. Check the connector between M7-FSCB J4 for proper connection and correct as necessary.
2. Check the connector of M7 for proper drive coupling and correct as necessary.
3. Check the connector between PS12-FSCB J4 for proper connection and correct as necessary.
4. PS12 I/O check, sensor check
   - Control signal: FSCB J4<B>-4 (ON)
   - Location of electrical component: FS-534 13-C
5. M7 operation check
   - Control signal: FSCB J4<A>-5 to 8
   - Location of electrical component: FS-534 11-C to D
6. Replace M7.
7. Replace FSCB.

NOTICE
- Link to the wiring diagram (N.2.8 FS-534)
- Link to the layout drawings for related parts by each trouble code (S.17.2 FS-534/FS-534SD)

## 3.6.5 C1105

### (1) Contents

| | |
|---|---|
| Trouble type | C1105: Bundle eject motor drive malfunction (When FS-534 or FS-534SD is installed) |
| Rank | B |
| Trouble detection condition | • The gripper home position sensor (PS18) is not turned ON (blocked) even after the set period of time has elapsed after the gripper position detection sensor (PS19) is turned OFF (unblocked).<br>• The gripper position detection sensor (PS19) is not turned OFF (unblocked) even after the set period of time has elapsed after it is turned ON (blocked).<br>• The gripper position detection sensor (PS19) is not turned ON (blocked) even after the set period of time has elapsed after the gripper home position sensor (PS18) is turned OFF (unblocked).<br>• The gripper home position sensor (PS18) is not turned OFF (unblocked) even after the set period of time has elapsed after the bundle eject motor (M10) is energized.<br>• The gripper home position sensor (PS18) and the gripper position detection sensor (PS19) is turned ON (blocked) at the same time. |
| Trouble isolation | - |
| Relevant electrical parts | • Bundle eject motor (M10)<br>• Gripper home position sensor (PS18)<br>• Gripper position detection sensor (PS19)<br>• FS control board (FSCB) |

### (2) Procedure

1. Check the motor and sensor connectors for proper connection, and correct as necessary.
2. Check the connector of M10 for proper drive coupling, and correct as necessary.
3. PS18 I/O check, sensor check
   - Control signal: FSCB J13-13 (ON)
   - Location of electrical component: FS-534 7-C
4. PS19 I/O check, sensor check
   - Control signal: FSCB J12-3 (ON)
   - Location of electrical component: FS-534 7-C
5. M10 operation check
   - Control signal: FSCB J13-1 to 2
   - Location of electrical component: FS-534 8-C to D
6. Replace M10.
7. Replace FSCB.

NOTICE
- Link to the wiring diagram (N.2.8 FS-534)
- Link to the layout drawings for related parts by each trouble code (S.18. C1105)

## 3.6.6 C1106

### (1) Contents

| | |
|---|---|
| Trouble type | C1106: Stapler movement motor malfunction (When FS-533, FS-534 or FS-534SD is installed) |
| Rank | B |
| Trouble detection condition | <When FS-533 is installed><br>• The stapler home sensor (PS110) is not turned OFF (unblocked) after the laps of given time after it started operating from the home position.<br>• The stapler home sensor (PS110) is not turned ON (blocked) after the laps of give time after the stapler movement motor (M107) turned ON when it returned to the home position. |
| | <When FS-534 or FS-534SD is installed><br>• The stapler home position sensor (Rear) (PS23) is not turned ON (blocked) or OFF (unblocked) even after the set period of time has elapsed after the side stapler movement motor (M13) turned ON.<br>• The stapler does not reach the specified position within the set period of time. |
| Trouble isolation | Staple |
| Relevant electrical parts | <When FS-533 is installed><br>• Stapler movement motor (M107)<br>• Stapler home sensor (PS110)<br>• Stapler relay board (STREYB)<br>• FS control board (FSCB) |
| | <When FS-534 or FS-534SD is installed><br>• Side stapler movement motor (M13)<br>• Stapler home position sensor (Rear) (PS23)<br>• FS control board (FSCB) |

### (2) Procedure

#### (a) When FS-533 is installed

1. Check the connector between M107-STREYB CN123 for proper connection, and correct as necessary.
2. Check the connector of M107 for proper drive coupling, and correct as necessary.
3. Check the connector between PS110-FSCB CN110 for proper connection, and correct as necessary.
4. PS110 I/O check, sensor check
   - Control signal: FSCB CN110
   - Location of electrical component: FS-533 8-D to E
5. M107 operation check
   - Control signal: STREYB CN123-5 to 8
   - Location of electrical component: FS-533 5-L
6. Replace M107.
7. Replace STREYB.
8. FSCB CP107 conduction check
9. Replace FSCB.

NOTICE
- Link to the wiring diagram (N.2.7 FS-533)
- Link to the layout drawings for related parts by each trouble code (S.19.1 FS-533)

#### (b) When FS-534 or FS-534SD is installed

1. Check the connector between M13-relay CN3-FSCB J11 for proper connection, and correct as necessary.
2. Check the connector of M13 for proper drive coupling and correct as necessary.
3. Check the connector between PS23-relay CN3-FSCB J11 for proper connection, and correct as necessary.
4. PS23 I/O check, sensor check
   - Control signal: FSCB J11<B>-3 (ON)
   - Location of electrical component: FS-534 4-C
5. M13 operation check
   - Control signal: FSCB J11<A>-1 to 4
   - Location of electrical component: FS-534 4-C to D
6. Replace M13.

7. Replace FSCB.

NOTICE
- Link to the wiring diagram (N.2.8 FS-534)
- Link to the layout drawings for related parts by each trouble code (S.19.2 FS-534/FS-534SD)

### 3.6.7 C1109

#### (1) Contents

| | |
|---|---|
| Trouble type | C1109: Stapler motor drive malfunction (When FS-533, FS-534 or FS-534SD is installed) |
| Rank | B |
| Trouble detection condition | <When FS-533 is installed><br>• The stapler home sensor (PS110) is not turned ON (blocked) even after the set period of time has elapsed after the stapler motor turned ON. |
| | <When FS-534 or FS-534SD is installed><br>• The stapler home position sensor (Rear) (PS23) is not turned ON (blocked) or OFF (unblocked) even after the set period of time has elapsed after the stapler motor (M14) turned ON.<br>• The stapler position sensor (Center) (PS24) is turned ON (blocked), when the stapler motor (M14) is running. |
| Trouble isolation | Staple |
| Relevant electrical parts | <When FS-533 is installed><br>• Stapler home sensor (PS110)<br>• Stapler unit<br>• Stapler relay board (STREYB)<br>• FS control board (FSCB) |
| | <When FS-534 or FS-534SD is installed><br>• Stapler home position sensor (Rear) (PS23)<br>• Stapler unit<br>• Stapler position sensor (Center) (PS24)<br>• FS control board (FSCB) |

#### (2) Procedure

##### (a) When FS-533 is installed

1. Check the connector between the stapler unit-STREYB CN122 and CN123 for proper connection and correct as necessary.
2. Check the connector of the stapler unit for proper drive coupling and correct as necessary.
3. Check the connector between PS110-FSCB CN110 for proper connection and correct as necessary.
4. PS110 I/O check, sensor check
   - Control signal: FSCB CN110
   - Location of electrical component: FS-533 8-D to E
5. Replace the stapler unit.
6. Replace STREYB.
7. Replace FSCB.

NOTICE
- Link to the wiring diagram (N.2.7 FS-533)
- Link to the layout drawings for related parts by each trouble code (S.20.1 FS-533)

##### (b) When FS-534 or FS-534SD is installed

1. Check the connector between the stapler unit-relay CN4-FSCB J11 for proper connection and correct as necessary.
2. Check the connector of the stapler unit for proper drive coupling and correct as necessary.
3. Check the connector between PS23-relay CN3-FSCB J11 for proper connection, and correct as necessary.
4. Check the connector between PS24-relay CN3-FSCB J11 for proper connection and correct as necessary.
5. PS23 I/O check, sensor check
   - Control signal: FSCB J11<B>-3 (ON)
   - Location of electrical component: FS-534 4-C
6. PS24 I/O check, sensor check
   - Control signal: FSCB J11<B>-6 (ON)
   - Location of electrical component: FS-534 4 to 5-C
7. Replace the stapler unit.
8. Replace FSCB.

NOTICE
- Link to the wiring diagram (N.2.8 FS-534)
- Link to the layout drawings for related parts by each trouble code (S.20.2 FS-534/FS-534SD)

### 3.6.8 C1112

#### (1) Contents

| | |
|---|---|
| Trouble type | C1112: Stapler motor malfunction (When FS-534SD is installed) |
| Rank | B |
| Trouble detection condition | • The stapler home sensor is not turned ON even after the set period of time has elapsed while the stapler motor is energized.<br>• The stapler home sensor is not turned OFF even after the set period of time has elapsed after the stapler home sensor is turned ON. |
| Trouble isolation | • Staple<br>• Center Stapling/Half-Fold/Tri-Fold |

| | |
|---|---|
| Relevant electrical parts | • Staple unit<br>• SD drive board (SDDB)<br>• FS control board (FSCB) |

### (2) Procedure

1. Check the connector between the staple unit-SDDB J4 for proper connection and correct as necessary.
2. Check the connector of the staple unit for proper drive coupling and correct as necessary.
3. Replace the staple unit.
4. Replace SDDB.
5. Replace FSCB.

NOTICE
- Link to the layout drawings for related parts by each trouble code (S.21. C1112)

## 3.6.9 C1113

### (1) Contents

| | |
|---|---|
| Trouble type | C1113: Center-staple lead edge stopper motor malfunction (When FS-534SD is installed) |
| Rank | B |
| Trouble detection condition | The stopper home sensor (PS6) is not turned ON (blocked) or OFF (unblocked) even after the set period of time has elapsed after the stopper drive motor (M4) is turned ON. |
| Trouble isolation | • Staple<br>• Center Stapling/Half-Fold/Tri-Fold |
| Relevant electrical parts | • Stopper drive motor (M4)<br>• Stopper home sensor (PS6)<br>• SD drive board (SDDB)<br>• FS control board (FSCB) |

### (2) Procedure

1. Check the connector between M4-SDDB J10 for proper connection and correct as necessary.
2. Check the connector of M4 for proper drive coupling and correct as necessary.
3. Check the connector between PS6-SDDB J10 for proper connection and correct as necessary.
4. PS6 I/O check, sensor check
   - Control signal: SDDB J10-5 (ON)
   - Location of electrical component: SD-511 2-G
5. M4 operation check
   - Control signal: SDDB J10-6 to 9
   - Location of electrical component: SD-511 1 to 2-F to G
6. Replace M4.
7. Replace SDDB.
8. Replace FSCB.

NOTICE
- Link to the wiring diagram (N.2.9 FS-534SD)
- Link to the layout drawings for related parts by each trouble code (S.22. C1113)

## 3.6.10 C1114

### (1) Contents

| | |
|---|---|
| Trouble type | C1114: Center-staple front adjust drive motor malfunction (When FS-534SD is installed) |
| Rank | B |
| Trouble detection condition | The alignment home sensor (PS4) is not turned ON (blocked) or OFF (unblocked) even after the set period of time has elapsed after the alignment motor (M3) is turned ON. |
| Trouble isolation | Center Stapling/Half-Fold/Tri-Fold |
| Relevant electrical parts | • Alignment motor (M3)<br>• Alignment home sensor (PS4)<br>• SD drive board (SDDB)<br>• FS control board (FSCB) |

### (2) Procedure

1. Check the connector between M3-relay CN10-SDDB J7 for proper connection and correct as necessary.
2. Check the connector of M3 for proper drive coupling and correct as necessary.
3. Check the connector between PS4-relay CN10-SDDB J7 for proper connection and correct as necessary.
4. PS4 I/O check, sensor check
   - Control signal: SDDB J7-6 (ON)
   - Location of electrical component: SD-511 6-F
5. M3 operation check
   - Control signal: SDDB J7-7 to 10
   - Location of electrical component: SD-511 5-F to G
6. Replace M3.
7. Replace SDDB.
8. Replace FSCB.

NOTICE
- Link to the wiring diagram (N.2.9 FS-534SD)

- Link to the layout drawings for related parts by each trouble code (S.23. C1114)

### 3.6.11 C1115

#### (1) Contents

| | |
|---|---|
| Trouble type | C1115: Center-staple knife drive motor malfunction (When FS-534SD is installed) |
| Rank | B |
| Trouble detection condition | The center fold knife home sensor (PS8) is not turned ON (blocked) or OFF (unblocked) even after the set period of time has elapsed after the center fold knife motor (M9) is turned ON. |
| Trouble isolation | Center Stapling/Half-Fold/Tri-Fold |
| Relevant electrical parts | • Center fold knife motor (M9)<br>• Center fold knife home sensor (PS8)<br>• SD drive board (SDDB)<br>• FS control board (FSCB) |

#### (2) Procedure

1. Check the connector between M9-SDDB J11 for proper connection and correct as necessary.
2. Check the connector of M9 for proper drive coupling and correct as necessary.
3. Check the connector between PS8-relay CN10-SDDB J7 for proper connection and correct as necessary.
4. PS8 I/O check, sensor check
   - Control signal: SDDB J7-3 (ON)
   - Location of electrical component: SD-511 6-G
5. M9 operation check
   - Control signal: SDDB J11-11 to 20
   - Location of electrical component: SD-511 1 to 2-B
6. Replace M9.
7. Replace SDDB.
8. Replace FSCB.

NOTICE
- Link to the wiring diagram (N.2.9 FS-534SD)
- Link to the layout drawings for related parts by each trouble code (S.24. C1115)

### 3.6.12 C1132

#### (1) Contents

| | |
|---|---|
| Trouble type | C1132: Punch drive motor malfunction (When FS-533+PK-519, FS-534+PK-520 or FS-534SD+PK-520 is installed) |
| Rank | B |
| Trouble detection condition | <When FS-533+PK-519 is installed><br>• The puncher drive cam sensor (PS203) or puncher home sensor (PS204) is not turned ON (blocked) or OFF (unblocked) even after the set period of time has elapsed while the punch motor (M201) is energized.<br>• The punch motor sensor (PS202) is not turned ON when the punch motor (M201) driven.<br>• The holes with other marketing area is set in [Service Mode] -> [Finisher] -> [Punch Option Setting]. |
| | <When FS-534+PK-520 or FS-534SD+PK-520 is installed><br>• The punch home sensor (PS1) is not turned ON (blocked) or OFF (unblocked) even after the set period of time has elapsed while the punch drive motor (M1) is energized.<br>• Thick paper is loaded and a punch operation is performed with [Plain Paper] left set for the paper type. |
| Trouble isolation | - |
| Relevant electrical parts | <When FS-533+PK-519 is installed><br>• Punch motor (M201)<br>• Punch motor sensor (PS202)<br>• Puncher drive cam sensor (PS203)<br>• Puncher home sensor (PS204)<br>• PK control board (PKCB)<br>• FS control board (FSCB) |
| | <When FS-534+PK-520 or FS-534SD+PK-520 is installed><br>• Punch drive motor (M1)<br>• Punch home sensor (PS1)<br>• FS control board (FSCB) |

#### (2) Procedure

##### (a) When FS-533+PK-519 is installed

1. Check the number of the holes in [Service Mode] -> [Finisher] -> [Punch Option Setting].
2. Check the connector between M201-PKCB CN203 for proper connection and correct as necessary.
3. Check the connector of M201 for proper drive coupling and correct as necessary.
4. Check the connector between PS202-PKCB CN204 for proper connection and correct as necessary.
5. Check the connector between PS203-PKCB CN204 for proper connection and correct as necessary.
6. Check the connector between PS204-PKCB CN204 for proper connection and correct as necessary.
7. PS202 I/O check, sensor check
   - Control signal: PKCB CN204
   - Location of electrical component: FS-533 (PK-519) 5-C
8. PS203 I/O check, sensor check

- Control signal: PKCB CN204
- Location of electrical component: FS-533 (PK-519) 6-C

9. PS204 I/O check, sensor check
   - Control signal: PKCB CN204
   - Location of electrical component: FS-533 (PK-519) 6-C
10. M201 operation check
    - Control signal: PKCB CN203-1 to 2
    - Location of electrical component: FS-533 (PK-519) 4-C
11. Replace M201.
12. PKCB F201 conduction check
13. Replace PKCB.
14. Replace FSCB.

NOTICE
- Link to the wiring diagram (N.2.7 FS-533)
- Link to the layout drawings for related parts by each trouble code (S.25.1 FS-533+PK-519)

#### (b) When FS-534+PK-520 or FS-534SD+PK-520 is installed

1. Check that the correct paper type is set.
   To print on thick paper, change the paper type to [Thick].
2. If the trouble occurs even when [Paper Type] is set to the correct paper type, select [Service Mode] -> [Security Settings] -> [Engine FW DipSW] and flip SW No. 17 to the ON.
   **NOTE**
   - **Changing the setting of Engine FW DipSW results in a longer perforating time and greater punch perforating noise regardless of the paper type.**
3. Check the connector between M1-relay CN351-FSCB J7 for proper connection and correct as necessary.
4. Check the connector of M1 for proper drive coupling and correct as necessary.
5. Check the connector between PS1-FSCB J7 for proper connection and correct as necessary.
6. PS1 I/O check, sensor check
   - Control signal: FSCB J7-5 (ON)
   - Location of electrical component: FS-534 (PK-520) 7-K
7. M1 operation check
   - Control signal: FSCB J7-7 to 8
   - Location of electrical component: FS-534 (PK-520) 7-K
8. Replace M1.
9. Replace FSCB.

NOTICE
- Link to the wiring diagram (N.2.8 FS-534)
- Link to the layout drawings for related parts by each trouble code (S.25.2 FS-534+PK-520/FS-534SD+PK-520)

### 3.6.13 C1140

#### (1) Contents

| | |
|---|---|
| Trouble type | C1140: Alignment plate motor/Rr malfunction (When FS-533, FS-534 or FS-534SD is installed) |
| Rank | B |
| Trouble detection condition | <When FS-533 is installed><br>• The alignment plate home sensor/R (PS109) is not turned OFF (unblocked) after the set period of time has elapsed after the plate drive starts from the home position.<br>• The alignment plate home sensor/R (PS109) is not turned ON (blocked) after the set period of time has elapsed while the alignment motor/R (M106) is energized when the plate returns to the home position. |
| | <When FS-534 or FS-534SD is installed><br>• The alignment plate/R home sensor (PS13) is not turned ON (blocked) or OFF (unblocked) even after the set period of time has elapsed while the alignment motor/Rear (M8) is energized. |
| Trouble isolation | - |
| Relevant electrical parts | <When FS-533 is installed><br>• Alignment motor/R (M106)<br>• Alignment plate home sensor/R (PS109)<br>• FS control board (FSCB) |
| | <When FS-534 or FS-534SD is installed><br>• Alignment motor/Rear (M8)<br>• Alignment plate/R home sensor (PS13)<br>• FS control board (FSCB) |

#### (2) Procedure

#### (a) When FS-533 is installed

1. Check the connector between M106-FSCB CN102 for proper connection and correct as necessary.
2. Check the connector of M106 for proper drive coupling and correct as necessary.
3. Check the connector between PS109-FSCB CN102 for proper connection and correct as necessary.
4. PS109 I/O check, sensor check
   - Control signal: FSCB CN102
   - Location of electrical component: FS-533 7-J
5. M106 operation check
   - Control signal: FSCB CN102
   - Location of electrical component: FS-533 8-J

6. Replace M106
7. FSCB CP105 conduction check
8. Replace FSCB

NOTICE
- Link to the wiring diagram (N.2.7 FS-533)
- Link to the layout drawings for related parts by each trouble code (S.26.1 FS-533)

#### (b) When FS-534 or FS-534SD is installed

1. Check the connector between M8-FSCB J12 for proper connection and correct as necessary.
2. Check the connector of M8 for proper drive coupling and correct as necessary.
3. Check the connector between PS13-FSCB J9 for proper connection and correct as necessary.
4. PS13 I/O check, sensor check
   - Control signal: FSCB J9<B>-9 (ON)
   - Location of electrical component: FS-534 9-C
5. M8 operation check
   - Control signal: FSCB J12-13 to 16
   - Location of electrical component: FS-534 5 to 6-C to D
6. Replace M8.
7. Replace FSCB.

NOTICE
- Link to the wiring diagram (N.2.8 FS-534)
- Link to the layout drawings for related parts by each trouble code (S.26.2 FS-534/FS-534SD)

### 3.6.14 C1141

#### (1) Contents

| | |
|---|---|
| Trouble type | C1141: Paddle motor drive malfunction (When FS-534 or FS-534SD is installed) |
| Rank | B |
| Trouble detection condition | The upper paddle home position detection sensor (PS14) is not turned ON (blocked) or OFF (unblocked) even after the set period of time has elapsed while the FNS paddle motor (M5) is turning. |
| Trouble isolation | Staple |
| Relevant electrical parts | • FNS paddle motor (M5)<br>• Upper paddle home position detection sensor (PS14)<br>• FS control board (FSCB) |

#### (2) Procedure

1. Check the connector between M5-FSCB J4 for proper connection and correct as necessary.
2. Check the connector of M5 for proper drive coupling and correct as necessary.
3. Check the connector between PS14-FSCB J4 for proper connection and correct as necessary.
4. PS14 I/O check, sensor check
   - Control signal: FSCB J4<B>-7 (ON)
   - Location of electrical component: FS-534 13-C
5. M5 operation check
   - Control signal: FSCB J4<A>-9 to 12
   - Location of electrical component: FS-534 12-C to D
6. Replace M5.
7. Replace FSCB.

NOTICE
- Link to the wiring diagram (N.2.8 FS-534)
- Link to the layout drawings for related parts by each trouble code (S.27. C1141)

### 3.6.15 C1144

#### (1) Contents

| | |
|---|---|
| Trouble type | C1144: Pre-eject drive motor malfunction (When FS-534 or FS-534SD is installed) |
| Rank | B |
| Trouble detection condition | • The pre-eject home sensor (PS21) is not turned ON (blocked) or OFF (unblocked) even after the set period of time has elapsed after the pre-eject drive motor (M9) is turned ON.<br>• The pre-eject away sensor (PS22) is not turned ON (blocked) or OFF (unblocked) even after the set period of time has elapsed after the pre-eject drive motor (M9) is turned ON. |
| Trouble isolation | - |
| Relevant electrical parts | • Pre-eject drive motor (M9)<br>• Pre-eject home sensor (PS21)<br>• Pre-eject away sensor (PS22)<br>• FS control board (FSCB) |

#### (2) Procedure

1. Check the connector between M9-relay CN7<A>-FSCB J13 for proper connection, and correct as necessary.
2. Check the connector of M9 for proper drive coupling and correct as necessary.
3. Check the connector between PS21-relay CN8-relay CN7<B>-FSCB J12 for proper connection, and correct as necessary.
4. Check the connector between PS22-relay CN8-relay CN7<B>-FSCB J12 for proper connection, and correct as necessary.
5. PS21 I/O check, sensor check

- Control signal: FSCB J12-6 (ON)
- Location of electrical component: FS-534 6-C

6. PS22 I/O check, sensor check
   - Control signal: FSCB J12-9 (ON)
   - Location of electrical component: FS-534 6-C
7. M9 operation check
   - Control signal: FSCB J13-3 to 4
   - Location of electrical component: FS-534 8-C to D
8. Replace M9.
9. Replace FSCB.

NOTICE
- Link to the wiring diagram (N.2.8 FS-534)
- Link to the layout drawings for related parts by each trouble code (S.28. C1144)

### 3.6.16 C1145

#### (1) Contents

| | |
|---|---|
| Trouble type | C1145: Trailing edge stopper motor malfunction (When FS-534 or FS-534SD is installed) |
| Rank | B |
| Trouble detection condition | The trailing edge stopper home position detection sensor (PS20) is not turned ON (blocked) or OFF (unblocked) even after the set period of time has elapsed after the trailing edge stopper motor (M6) is turned ON. |
| Trouble isolation | - |
| Relevant electrical parts | • Trailing edge stopper motor (M6)<br>• Trailing edge stopper home position detection sensor (PS20)<br>• FS control board (FSCB) |

#### (2) Procedure

1. Check the connector between M6-FSCB J5 for proper connection and correct as necessary.
2. Check the connector of M6 for proper drive coupling and correct as necessary.
3. Check the connector between PS20-relay CN22-FSCB J5 for proper connection and correct as necessary.
4. PS20 I/O check, sensor check
   - Control signal: FSCB J5-9 (ON)
   - Location of electrical component: FS-534 9-K
5. M6 operation check
   - Control signal: FSCB J5-13 to 16
   - Location of electrical component: FS-534 9-K
6. Replace M6.
7. Replace FSCB.

NOTICE
- Link to the wiring diagram (N.2.8 FS-534)
- Link to the layout drawings for related parts by each trouble code (S.29. C1145)

### 3.6.17 C1156

#### (1) Contents

| | |
|---|---|
| Trouble type | C1156: SD paddle motor malfunction (When FS-534SD is installed) |
| Rank | B |
| Trouble detection condition | The paddle home sensor (PS5) is not turned ON (blocked) or OFF (unblocked) even after the set period of time has elapsed while the SD paddle motor (M7) is energized. |
| Trouble isolation | Center Stapling/Half-Fold/Tri-Fold |
| Relevant electrical parts | • SD paddle motor (M7)<br>• Paddle home sensor (PS5)<br>• SD drive board (SDDB)<br>• FS control board (FSCB) |

#### (2) Procedure

1. Check the connector between M7-SDDB J8 for proper connection and correct as necessary.
2. Check the connector of M7 for proper drive coupling and correct as necessary.
3. Check the connector between PS5-SDDB J8 for proper connection and correct as necessary.
4. PS5 I/O check, sensor check
   - Control signal: SDDB J8-3 (ON)
   - Location of electrical component: SD-511 3 to 4-G
5. M7 operation check
   - Control signal: SDDB J8-4 to 7
   - Location of electrical component: SD-511 3-F to G
6. Replace M7.
7. Replace SDDB.
8. Replace FSCB.

NOTICE
- Link to the wiring diagram (N.2.9 FS-534SD)
- Link to the layout drawings for related parts by each trouble code (S.30. C1156)

### 3.6.18 C1182

#### (1) Contents

| | |
|---|---|
| Trouble type | C1182: Shift motor drive malfunction (When JS-506 is installed) |
| Rank | B |
| Trouble detection condition | • The tray shift home sensor (PS1) is not turned ON (blocked) after the set period of time has elapsed after the tray shift motor (M1) is turned ON (start of moving to the home position.)<br>• The tray shift home sensor (PS1) is not turned OFF (unblocked) after the set period of time has elapsed after the tray shift motor (M1) is turned ON (start of moving to the shift position.) |
| Trouble isolation | Staple |
| Relevant electrical parts | • Tray shift motor (M1)<br>• Tray shift home sensor (PS1)<br>• JS control board (JSCB) |

#### (2) Procedure

1. Check the connector between M1-JSCB CN208 for proper connection and correct as necessary.
2. Check the connector of M1 for proper drive coupling and correct as necessary.
3. Check the connector between PS1-JSCB CN208 for proper connection and correct as necessary.
4. PS1 I/O check, sensor check
   - Control signal: JSCB CN208-5 (ON)
   - Location of electrical component: JS-506 5-C
5. M1 operation check
   - Control signal: JSCB CN208-1 (DRV)
   - Location of electrical component: JS-506 4 to 5-C
6. Replace M1.
7. JSCB ICP3 conduction check
8. Replace JSCB.

NOTICE
- Link to the wiring diagram (N.2.10 JS-506)
- Link to the layout drawings for related parts by each trouble code (S.31. C1182)

### 3.6.19 C1184

#### (1) Contents

| | |
|---|---|
| Trouble type | C1184: Paper discharge control motor malfunction (When FS-534 or FS-534SD is installed) |
| Rank | B |
| Trouble detection condition | The paper delivery control sensor (PS28) is not turned ON (blocked) or OFF (unblocked) even after the set period of time has elapsed while the paper receiving control motor (M12) is energized. |
| Trouble isolation | - |
| Relevant electrical parts | • Paper receiving control motor (M12)<br>• Paper delivery control sensor (PS28)<br>• FS control board (FSCB) |

#### (2) Procedure

1. Check the connector between M12-relay CN1-FRCB J14 for proper connection and correct as necessary.
2. Check the connector of M12 for proper drive coupling and correct as necessary.
3. Check the connector between PS28-relay CN1-FRCB J14 for proper connection and correct as necessary.
4. PS28 I/O check, sensor check
   - Control signal: FSCB J14<B>-3 (ON)
   - Location of electrical component: FS-534 2 to 3-C
5. M12 operation check
   - Control signal: FSCB J14<A>-9 to 12
   - Location of electrical component: FS-534 2-C to D
6. Replace M12.
7. Replace FSCB.

NOTICE
- Link to the wiring diagram (N.2.8 FS-534)
- Link to the layout drawings for related parts by each trouble code (S.32. C1184)

### 3.6.20 C1195

#### (1) Contents

| | |
|---|---|
| Trouble type | C1195: Paper discharge control motor malfunction (When FS-534SD is installed) |
| Rank | B |
| Trouble detection condition | The curl cover detection sensor (PS2) is not turned ON (blocked) or OFF (unblocked) even after the set period of time has elapsed after the paper discharge control motor (M2) is turned ON. |
| Trouble isolation | Center Stapling/Half-Fold/Tri-Fold |

| | |
|---|---|
| Relevant electrical parts | • Paper discharge control motor (M2)<br>• Curl cover detection sensor (PS2)<br>• SD drive board (SDDB)<br>• FS control board (FSCB) |

#### (2) Procedure

1. Check the connector between M2-relay CN3-relay CN2-SDDB J5 for proper connection and correct as necessary.
2. Check the connector of M2 for proper drive coupling and correct as necessary.
3. Check the connector between PS2-relay CN3-relay CN2-SDDB J5 for proper connection and correct as necessary.
4. PS2 I/O check, sensor check
   - Control signal: SDDB J5-3 (ON)
   - Location of electrical component: SD-511 3-B
5. M2 operation check
   - Control signal: SDDB J5-4 to 7
   - Location of electrical component: SD-511 3-B
6. Replace M2.
7. Replace SDDB.
8. Replace FSCB.

NOTICE
- Link to the wiring diagram (N.2.9 FS-534SD)
- Link to the layout drawings for related parts by each trouble code (S.33. C1195)

### 3.6.21 C1196

#### (1) Contents

| | |
|---|---|
| Trouble type | C1196: Center fold roller motor malfunction (When FS-534SD is installed) |
| Rank | B |
| Trouble detection condition | The guide home sensor (PS7) is not turned ON (blocked) or OFF (unblocked) even after the set period of time has elapsed after the center fold roller motor (M8) is turned ON. |
| Trouble isolation | Center Stapling/Half-Fold/Tri-Fold |
| Relevant electrical parts | • Center fold roller motor (M8)<br>• Guide home sensor (PS7)<br>• SD drive board (SDDB)<br>• FS control board (FSCB) |

#### (2) Procedure

1. Check the connector between M8-SDDB J8 for proper connection and correct as necessary.
2. Check the connector of M8 for proper drive coupling and correct as necessary.
3. Check the connector between PS7-SDDB J9 for proper connection and correct as necessary.
4. PS7 I/O check, sensor check
   - Control signal: SDDB J9-6 (ON)
   - Location of electrical component: SD-511 4-G
5. M8 operation check
   - Control signal: SDDB J8-11 to 14
   - Location of electrical component: SD-511 2 to 3-F to G
6. Replace M8.
7. Replace SDDB.
8. Replace FSCB.

NOTICE
- Link to the wiring diagram (N.2.9 FS-534SD)
- Link to the layout drawings for related parts by each trouble code (S.34. C1196)

### 3.6.22 C1197

#### (1) Contents

| | |
|---|---|
| Trouble type | C1197: Tri-folding guide motor malfunction (When FS-534SD is installed) |
| Rank | B |
| Trouble detection condition | The tri-folding gate home sensor (PS11) is not turned ON (blocked) or OFF (unblocked) even after the set period of time has elapsed while the tri-folding guide motor (M6) is energized. |
| Trouble isolation | Center Stapling/Half-Fold/Tri-Fold |
| Relevant electrical parts | • Tri-folding guide motor (M6)<br>• Tri-folding gate home sensor (PS11)<br>• SD drive board (SDDB)<br>• FS control board (FSCB) |

#### (2) Procedure

1. Check the connector between M6-SDDB J9 for proper connection and correct as necessary.
2. Check the connector of M6 for proper drive coupling and correct as necessary.
3. Check the connector between PS11-SDDB J8 for proper connection and correct as necessary.
4. PS11 I/O check, sensor check
   - Control signal: SDDB J8-10 (ON)
   - Location of electrical component: SD-511 3-G

5. M6 operation check
   - Control signal: SDDB J9-7 to 10
   - Location of electrical component: SD-511 4-F to G
6. Replace M6.
7. Replace SDDB.
8. Replace FSCB.

NOTICE
- Link to the wiring diagram (N.2.9 FS-534SD)
- Link to the layout drawings for related parts by each trouble code (S.35. C1197)

### 3.6.23 C11A1

#### (1) Contents

| | |
|---|---|
| Trouble type | C11A1: Exit roller pressure/ retraction malfunction (When FS-533 is installed) |
| Rank | B |
| Trouble detection condition | The pick up roller position sensor (PS105) is not turned ON (blocked) or OFF (unblocked) even after the set period of time has elapsed after the exit roller lift up motor (M104) is turned ON. |
| Trouble isolation | - |
| Relevant electrical parts | • Exit roller lift up motor (M104)<br>• Pick up roller position sensor (PS105)<br>• FS control board (FSCB) |

#### (2) Procedure

1. Check the connector between M104-FSCB CN109 for proper connection and correct as necessary.
2. Check the connector of M104 for proper drive coupling and correct as necessary.
3. Check the connector between PS105-FSCB CN110 for proper connection and correct as necessary.
4. PS105 I/O check, sensor check
   - Control signal: FSCB CN110
   - Location of electrical component: FS-533 7-D to E
5. M104 operation check
   - Control signal: FSCB CN109
   - Location of electrical component: FS-533 9-D to E
6. Replace M104.
7. FSCB CP104 conduction check
8. Replace FSCB.

NOTICE
- Link to the wiring diagram (N.2.7 FS-533)
- Link to the layout drawings for related parts by each trouble code (S.36. C11A1)

### 3.6.24 C11A2

#### (1) Contents

| | |
|---|---|
| Trouble type | C11A2: Accommodation roller pressure/ retraction malfunction (When FS-534 or FS-534SD is installed) |
| Rank | B |
| Trouble detection condition | The receiving roller retraction sensor (PS11) is not turned ON (blocked) or OFF (unblocked) even after the set period of time has elapsed after the receiving roller retraction motor (M4) is turned ON. |
| Trouble isolation | Center Stapling/Half-Fold/Tri-Fold |
| Relevant electrical parts | • Receiving roller retraction motor (M4)<br>• Receiving roller retraction sensor (PS11)<br>• FS control board (FSCB) |

#### (2) Procedure

1. Check the connector between M4-FSCB J4 for proper connection and correct as necessary.
2. Check the connector of M4 for proper drive coupling and correct as necessary.
3. Check the connector between PS11-FSCB J4 for proper connection and correct as necessary.
4. PS11 I/O check, sensor check
   - Control signal: FSCB J4<B>-16 (ON)
   - Location of electrical component: FS-534 13-C
5. M4 operation check
   - Control signal: FSCB J4<A>-1 to 4
   - Location of electrical component: FS-534 11-C to D
6. Replace M4.
7. Replace FSCB.

NOTICE
- Link to the wiring diagram (N.2.8 FS-534)
- Link to the layout drawings for related parts by each trouble code (S.37. C11A2)

### 3.6.25 C11E1

#### (1) Contents

| | |
|---|---|
| Trouble type | C11E1: Paper exit switching drive malfunction (When FS-534 or FS-534SD is installed) |
| Rank | B |

| | |
|---|---|
| Trouble detection condition | The exchange folded knife home position sensor (PS30) is not turned ON (blocked) or OFF (unblocked) even after the set period of time has elapsed after the FNS entry transport motor (M2) is turned ON. |
| Trouble isolation | - |
| Relevant electrical parts | • FNS entry transport motor (M2)<br>• Exchange folded knife home position sensor (PS30)<br>• FS control board (FSCB) |

#### (2) Procedure

1. Check the connector between M2-FSCB J9 for proper connection and correct as necessary.
2. Check the connector of M2 for proper drive coupling and correct as necessary.
3. Check the connector between PS30-FSCB J4 for proper connection and correct as necessary.
4. PS30 I/O check, sensor check
   - Control signal: FSCB J4<A>-15 (ON)
   - Location of electrical component: FS-534 12-C
5. M2 operation check
   - Control signal: FSCB J9<A>-1 to 4
   - Location of electrical component: FS-534 10 to 11-B to C
6. Replace M2.
7. Replace FSCB.

NOTICE
- Link to the wiring diagram (N.2.8 FS-534)
- Link to the layout drawings for related parts by each trouble code (S.38. C11E1)

### 3.6.26 C1402

#### (1) Contents

| | |
|---|---|
| Trouble type | C1402: FS nonvolatile memory error (When FS-533 is installed) |
| Rank | C |
| Trouble detection condition | When the main power switch is turned ON, malfunctioning of the nonvolatile memory on the FS control board (FSCB) is detected. |
| Trouble isolation | - |
| Relevant electrical parts | FS control board (FSCB) |

#### (2) Procedure

1. Turn OFF the main power switch, disconnect and then connect the power cord. Wait for 10 sec. or more after connect the power cord, and turn ON the main power switch.
2. Rewrite the firmware.
3. Replace FSCB.

NOTICE
- Link to the layout drawings for related parts by each trouble code (S.39. C1402)

## 3.7 C2###

### 3.7.1 C2152, C2153, C2154, C2155, C2156

#### (1) Contents

| | |
|---|---|
| Trouble type | • C2152: Transfer belt fault at initial position return<br>• C2153: Transfer belt spacing fault at K pressure switching<br>• C2154: Transfer belt contact fault at all pressure switching<br>• C2155: Transfer belt contact fault after K pressure established<br>• C2156: Transfer belt spacing fault after all pressure established |
| Rank | B |
| Trouble detection condition | • C2152: The 1st transfer pressure sensor (PS39) is unable to detect "switch from retraction to pressure" or "switch from pressure to retraction" within a given period time after the 1st transfer pressure clutch (CL5) has stared engagement during an initial position return.<br>• C2153: The 1st transfer pressure sensor (PS39) does not detect “switch from pressure to retraction” within a given period time after 1st transfer pressure clutch (CL5) has stared engagement.<br>• C2154: The 1st transfer pressure sensor (PS39) does not detect “switch from retraction to pressure” within a given period time after 1st transfer pressure clutch (CL5) has stared engagement.<br>• C2155: The 1st transfer pressure sensor (PS39) is blocked after the lamps of given time after the 1st transfer pressure clutch (CL5) turned OFF when the release operation is finished.<br>• C2156: The 1st transfer pressure sensor (PS39) is unblocked after the laps of given time after the 1st transfer pressure clutch (CL5) turned OFF when the pressing operation is finished. |
| Trouble isolation | - |
| Relevant electrical parts | • Fusing motor (M3)<br>• 1st transfer pressure clutch (CL5)<br>• 1st transfer pressure sensor (PS39)<br>• MFP board (MFPB) |

#### (2) Procedure

1. Check the connector between M3-MFPB CN8E for proper connection and correct as necessary.
2. Check the connector of M3 for proper drive coupling and correct as necessary.

3. Check the connector between PS39-relay CN113-MFPB CN15EB for proper connection and correct as necessary.
4. Check the connector between CL5-relay CN118-MFPB CN15EA for proper connection and correct as necessary.
5. PS39 I/O check, sensor check
   - Control signal: MFPB CN15EB-17 (ON)
   - Location of electrical component: 10-C
6. CL5 operation check
   - Control signal: MFPB CN15EA-18 (ON)
   - Location of electrical component: 8-C
7. M3 operation check
   - Control signal: MFPB CN8E-9 (REM), MFPB CN8E-12 (LOCK)
   - Location of electrical component: 2-C
8. Replace M3.
9. MFPB ICP2E conduction check
10. Replace MFPB.

NOTICE
- Link to the wiring diagram (N.1. bizhub C368/C308/C258)
- Link to the layout drawings for related parts by each trouble code (S.40. C2152, C2153, C2154, C2155, C2156)

### 3.7.2 C2253, C2254

#### (1) Contents

| | |
|---|---|
| Trouble type | • C2253: PC motor failure to turn<br>• C2254: PC motor turning at abnormal timing |
| Rank | B |
| Trouble detection condition | C2253: The motor lock signal remains HIGH for a predetermined continuous period of time while the motor is turning.<br>C2254: The motor lock signal remains LOW for a predetermined continuous period of time while the motor remains stationary. |
| Trouble isolation | - |
| Relevant electrical parts | • PC motor (M2)<br>• MFP board (MFPB) |

#### (2) Procedure

1. Check the connector between M2-MFPB CN7E for proper connection and correct as necessary.
2. Check the connector of M2 for proper drive coupling and correct as necessary.
3. M2 operation check
   - Control signal: MFPB CN7E-13 (REM), MFPB CN7E-16 (LOCK)
   - Location of electrical component: 3 to 4-C
4. Replace M2.
5. Replace MFPB.

NOTICE
- Link to the wiring diagram (N.1. bizhub C368/C308/C258)
- Link to the layout drawings for related parts by each trouble code (S.41. C2253, C2254)

### 3.7.3 C2255, C2256

#### (1) Contents

| | |
|---|---|
| Trouble type | • C2255: Developing motor failure to turn<br>• C2256: Developing motor turning at abnormal timing |
| Rank | B |
| Trouble detection condition | • C2255: The motor lock signal remains HIGH for a predetermined continuous period of time while the motor is turning.<br>• C2256: The motor lock signal remains LOW for a predetermined continuous period of time while the motor remains stationary. |
| Trouble isolation | - |
| Relevant electrical parts | • Developing motor (M21)<br>• MFP board (MFPB) |

#### (2) Procedure

1. Check the connector between M21-MFPB CN7E for proper connection and correct as necessary.
2. Check the connector of M21 for proper drive coupling and correct as necessary.
3. M21 operation check
   - Control signal: MFPB CN7E-5 (REM), MFPB CN7E-8 (LOCK)
   - Location of electrical component: 3-C
4. Replace M21.
5. Replace MFPB.

NOTICE
- Link to the wiring diagram (N.1. bizhub C368/C308/C258)
- Link to the layout drawings for related parts by each trouble code (S.42. C2255, C2256)

### 3.7.4 C2355

#### (1) Contents

| | |
|---|---|
| Trouble type | C2355: Transfer belt cleaner cooling fan failure to turn |
| Rank | B |
| Trouble detection condition | The fan lock signal remains HIGH for a predetermined continuous period of time while the fan is turning. |
| Trouble isolation | - |
| Relevant electrical parts | • Transfer belt cleaner cooling fan (FM2)<br>• MFP board (MFPB) |

#### (2) Procedure

1. Check the connector between FM2-relay CN115-relay CN141-MFPB CN15EB for proper connection and correct as necessary.
2. Check the fan for possible overload and correct as necessary.
3. FM2 operation check
   - Control signal: MFPB CN15EB-3 (REM), MFPB CN15EB-5 (LOCK)
   - Location of electrical component: 9-C
4. Replace FM2.
5. Replace MFPB.

NOTICE
- Link to the wiring diagram (N.1. bizhub C368/C308/C258)
- Link to the layout drawings for related parts by each trouble code (S.43. C2355)

### 3.7.5 C2411, C2412, C2413, C2414

#### (1) Contents

| | |
|---|---|
| Trouble type | • C2411: Developing unit/C new article release<br>• C2412: Developing unit/M new article release<br>• C2413: Developing unit/Y new article release<br>• C2414: Developing unit/K new article release |
| Rank | B |
| Trouble detection condition | The status with the new unit is not cleared after the new developing unit is set. |
| Trouble isolation | - |
| Relevant electrical parts | • Developing unit<br>• Front side board (FRB)<br>• MFP board (MFPB) |

#### (2) Procedure

1. Reinstall developing unit.
2. Check the connector between the developing unit-FRB CN13 (C2414), CN14 (C2411), CN15 (C2412), CN16 (C2413) for proper connection and correct as necessary.
3. Check the connector between FRB CN1, CN3-MFPB CN4E, CN11E for proper connection and correct as necessary.
4. Replace the developing unit.
5. Replace FRB.
6. Replace MFPB.

NOTICE
- Link to the layout drawings for related parts by each trouble code (S.44. C2411, C2552, C2561)
- Link to the layout drawings for related parts by each trouble code (S.45. C2412, C2554, C2562)
- Link to the layout drawings for related parts by each trouble code (S.46. C2413, C2556, C2563)
- Link to the layout drawings for related parts by each trouble code (S.47. C2414, C2558, C2564)

### 3.7.6 C2551, C2553, C2555

#### (1) Contents

| | |
|---|---|
| Trouble type | • C2551: Abnormally low toner density detected cyan TCR sensor<br>• C2553: Abnormally low toner density detected magenta TCR sensor<br>• C2555: Abnormally low toner density detected yellow TCR sensor |
| Rank | B |
| Trouble detection condition | When sampling data is determined in TC ratio calculation control, TCR sensor output is higher than a predetermined value for a predetermined number of times in a row even though there is toner in the sub hopper. |
| Trouble isolation | - |
| Relevant electrical parts | • Developing unit/C,M,Y<br>• Toner cartridge/C,M,Y<br>• Toner empty sensor/Y (PS34)<br>• Toner empty sensor/M (PS33)<br>• Toner empty sensor/C (PS32)<br>• Toner cartridge motor/Y,M,C (M10)<br>• Toner supply motor/Y (M9)<br>• Toner supply motor/M (M8)<br>• Toner supply motor/C (M7) |

| | |
|---|---|
| | • Front side board (FRB)<br>• MFP board (MFPB) |

### (2) Procedure

1. Perform image troubleshooting procedure if image density is low.
2. Reinstall developing unit.
3. Reinstall toner cartridge.
4. Check the connector between the developing unit-FRB CN14 (C2551), CN15 (C2553), CN16 (C2555) for proper connection and correct as necessary.
5. Check the connector between FRB CN1, CN3-MFPB CN4E, CN11E for proper connection and correct as necessary.
6. M10 operation check
   - Control signal: MFPB CN16E-1 to 4
   - Location of electrical component: 15-C
7. M7, M8, M9 operation check
   - Control signal: MFPB CN16E-5 to 8 (M7), MFPB CN16E-9 to 12 (M8), MFPB CN16E-13 to 16 (M9)
   - Location of electrical component: 15-C (M7, M8), 16-C (M9)
8. If the toner empty sensor and its surroundings inside the sub hopper are dirtied with toner, clean them.
9. Replace the developing unit.
10. Replace FRB.
11. Replace MFPB.

NOTICE
- Link to the wiring diagram (N.1. bizhub C368/C308/C258)
- Link to the layout drawings for related parts by each trouble code (S.48. C2551)
- Link to the layout drawings for related parts by each trouble code (S.49. C2553)
- Link to the layout drawings for related parts by each trouble code (S.50. C2555)

## 3.7.7 C2552, C2554, C2556, C2558

### (1) Contents

| | |
|---|---|
| Trouble type | • C2552: Abnormally high toner density detected cyan TCR sensor<br>• C2554: Abnormally high toner density detected magenta TCR sensor<br>• C2556: Abnormally high toner density detected yellow TCR sensor<br>• C2558: Abnormally high toner density detected black TCR sensor |
| Rank | B |
| Trouble detection condition | The TC ratio of the toner determined by the toner replenishment control is detected to be the predetermined value or over for consecutive times. |
| Trouble isolation | - |
| Relevant electrical parts | • Developing unit/C,M,Y,K<br>• Toner cartridge/C,M,Y,K<br>• Front side board (FRB)<br>• MFP board (MFPB) |

### (2) Procedure

1. Reinstall developing unit.
2. Reinstall toner cartridge.
3. Check the connector between the developing unit-FRB CN13 (C2558), CN14 (C2552), CN15 (C2554), CN16 (C2556) for proper connection and correct as necessary.
4. Check the connector between FRB CN1, CN3-MFPB CN4E, CN11E for proper connection and correct as necessary.
5. Replace the developing unit.
6. Replace FRB.
7. Replace MFPB.

NOTICE
- Link to the layout drawings for related parts by each trouble code (S.44. C2411, C2552, C2561)
- Link to the layout drawings for related parts by each trouble code (S.45. C2412, C2554, C2562)
- Link to the layout drawings for related parts by each trouble code (S.46. C2413, C2556, C2563)
- Link to the layout drawings for related parts by each trouble code (S.47. C2414, C2558, C2564)

## 3.7.8 C2557

### (1) Contents

| | |
|---|---|
| Trouble type | C2557: Abnormally low toner density detected black TCR sensor |
| Rank | B |
| Trouble detection condition | When sampling data is determined in TC ratio calculation control, TCR sensor output is higher than a predetermined value for a predetermined number of times in a row even though there is toner in the sub hopper. |
| Trouble isolation | - |

| | |
|---|---|
| Relevant electrical parts | • Developing unit/K<br>• Toner cartridge/K<br>• Toner empty sensor/K (PS31)<br>• Toner cartridge motor/K (M25)<br>• Toner supply motor/K (M6)<br>• Front side board (FRB)<br>• MFP board (MFPB) |

#### (2) Procedure

1. Perform image troubleshooting procedure if image density is low.
2. Reinstall developing unit/K.
3. Reinstall toner cartridge/K.
4. Check the connector between the developing unit/K-FRB CN13 for proper connection and correct as necessary.
5. Check the connector between FRB CN1, CN3-MFPB CN4E, CN11E for proper connection and correct as necessary.
6. M25 operation check
   - Control signal: MFPB CN30E-1 to 4
   - Location of electrical component: 16-C
7. M6 operation check
   - Control signal: MFPB CN30E-5 to 8
   - Location of electrical component: 17-C
8. If the toner empty sensor and its surroundings inside the sub hopper are dirtied with toner, clean them.
9. Replace the developing unit/K.
10. Replace FRB.
11. Replace MFPB.

NOTICE
- Link to the wiring diagram (N.1. bizhub C368/C308/C258)
- Link to the layout drawings for related parts by each trouble code (S.51. C2557)

### 3.7.9 C2559, C255A, C255B

#### (1) Contents

| | |
|---|---|
| Trouble type | • C2559: Cyan TCR sensor adjustment failure<br>• C255A: Magenta TCR sensor adjustment failure<br>• C255B: Yellow TCR sensor adjustment failure |
| Rank | B |
| Trouble detection condition | TCR sensor automatic adjustment does not function properly, failing to adjust to an appropriate value. |
| Trouble isolation | - |
| Relevant electrical parts | • Developing unit/C,M,Y<br>• Toner cartridge motor/Y,M,C (M10)<br>• Toner supply motor/Y (M9)<br>• Toner supply motor/M (M8)<br>• Toner supply motor/C (M7)<br>• Front side board (FRB)<br>• MFP board (MFPB) |

#### (2) Procedure

1. Reinstall developing unit.
2. Check the connector between the developing unit-FRB CN14 (C2559), CN15 (C255A), CN16 (C255B) for proper connection and correct as necessary.
3. Check the connector between FRB CN1, CN3-MFPB CN4E, CN11E for proper connection and correct as necessary.
4. M10 operation check
   - Control signal: MFPB CN16E-1 to 4
   - Location of electrical component: 15-C
5. M7, M8, M9 operation check
   - Control signal: MFPB CN16E-5 to 8 (M7), MFPB CN16E-9 to 12 (M8), MFPB CN16E-13 to 16 (M9)
   - Location of electrical component: 15-C (M7, M8), 16-C (M9)
6. Replace the developing unit.
7. Replace FRB.
8. Replace MFPB.

NOTICE
- Link to the wiring diagram (N.1. bizhub C368/C308/C258)
- Link to the layout drawings for related parts by each trouble code (S.52. C2559)
- Link to the layout drawings for related parts by each trouble code (S.53. C255A)
- Link to the layout drawings for related parts by each trouble code (S.54. C255B)

### 3.7.10 C255C

#### (1) Contents

| | |
|---|---|
| Trouble type | C255C: Black TCR sensor adjustment failure |
| Rank | B |
| Trouble detection condition | TCR sensor automatic adjustment does not function properly, failing to adjust to an appropriate value. |

| | |
|---|---|
| Trouble isolation | - |
| Relevant electrical parts | • Developing unit/K<br>• Toner cartridge motor/K (M25)<br>• Toner supply motor/K (M6)<br>• Front side board (FRB)<br>• MFP board (MFPB) |

#### (2) Procedure

1. Reinstall developing unit/K.
2. Check the connector between the developing unit/K-FRB CN13 for proper connection and correct as necessary.
3. Check the connector between FRB CN1, CN3-MFPB CN4E, CN11E for proper connection and correct as necessary.
4. M25 operation check
   - Control signal: MFPB CN30E-1 to 4
   - Location of electrical component: 16-C
5. M6 operation check
   - Control signal: MFPB CN30E-5 to 8
   - Location of electrical component: 17-C
6. Replace the developing unit/K.
7. Replace FRB.
8. Replace MFPB.

NOTICE
- Link to the wiring diagram (N.1. bizhub C368/C308/C258)
- Link to the layout drawings for related parts by each trouble code (S.55. C255C)

### 3.7.11 C2561, C2562, C2563, C2564

#### (1) Contents

| | |
|---|---|
| Trouble type | • C2561: Cyan TCR sensor failure<br>• C2562: Magenta TCR sensor failure<br>• C2563: Yellow TCR sensor failure<br>• C2564: Black TCR sensor failure |
| Rank | B |
| Trouble detection condition | Alarm signals for each TCR sensor is detected more than the predetermined number of times.<br>This detection is used for detecting disconnection of TCR sensor connector. |
| Trouble isolation | - |
| Relevant electrical parts | • Developing unit/C,M,Y,K<br>• Front side board (FRB)<br>• MFP board (MFPB) |

#### (2) Procedure

1. Reinstall developing unit.
2. Check the connector between the developing unit-FRB CN13 (C2564), CN14 (C2561), CN15 (C2562), CN16 (C2563) for proper connection and correct as necessary.
3. Check the connector between FRB CN1, CN3-MFPB CN4E, CN11E for proper connection and correct as necessary.
4. Replace the developing unit.
5. Replace FRB.
6. MFPB ICP2E conduction check
7. Replace MFPB.

NOTICE
- Link to the layout drawings for related parts by each trouble code (S.44. C2411, C2552, C2561)
- Link to the layout drawings for related parts by each trouble code (S.45. C2412, C2554, C2562)
- Link to the layout drawings for related parts by each trouble code (S.46. C2413, C2556, C2563)
- Link to the layout drawings for related parts by each trouble code (S.47. C2414, C2558, C2564)

### 3.7.12 C2650

#### (1) Contents

| | |
|---|---|
| Trouble type | C2650: Main backup media access error |
| Rank | C |
| Trouble detection condition | • The re-written data, which has been read out, checked and founded as error, is read out again and found as error.<br>• The error was found when reading out the counter value.<br>• The main body detects that the EEPROM is not mounted. |
| Trouble isolation | - |
| Relevant electrical parts | • EEPROM/1<br>• EEPROM/2<br>• MFP board (MFPB) |

#### (2) Procedure

1. Make sure that EEPROM/1 and EEPROM/2 are mounted in their respective correct positions.
2. Check to see if the EEPROM is mounted in a reverse direction.

3. Check the connector from MFPB to EEPROM for proper connection and correct as necessary.
4. Replace MFPB.
5. Replace EEPROM/1 and EEPROM/2.
   1. Replace the current EEPROM with a new one.
   2. Replace the following components with new ones.
      When the transfer belt unit and the fusing unit have been replaced with new ones, perform [New Release] in the service mode. When the transfer roller has been replaced with a new one, perform [Counter clear].
      - Developing unit/Y,M,C,K
      - Drum unit/Y,M,C,K
      - Toner cartridge/Y,M,C,K
      - Transfer belt unit
      - Fusing unit
      - Transfer roller
      - Feed roller, pick-up roller, separation roller (including options)
   3. Turn ON the main power switch and check to see that warm-up is started.
      Make sure that malfunction codes other than C2650 or improper IU/TC placement is not detected.
   4. Make the specified readjustments.
6. If the above actions do not solve the problem, contact KM.

NOTICE
- Link to the layout drawings for related parts by each trouble code (S.56. C2650, CC163)

### 3.7.13 C2A11, C2A12, C2A13, C2A14

#### (1) Contents

| | |
|---|---|
| Trouble type | • C2A11: Drum unit/C new release failure<br>• C2A12: Drum unit/M new release failure<br>• C2A13: Drum unit/Y new release failure<br>• C2A14: Drum unit/K new release failure |
| Rank | B |
| Trouble detection condition | The status with the new unit is not cleared after the new drum unit is set. |
| Trouble isolation | - |
| Relevant electrical parts | • Drum unit/C,M,Y,K<br>• Front side board (FRB)<br>• MFP board (MFPB) |

#### (2) Procedure

1. Clean the connection between the drum unit and the machine if dirty.
2. Reinstall the drum unit.
3. Check the connector between the drum unit-FRB CN12 for proper connection and correct as necessary.
4. Check the connector between FRB CN1, CN3-MFPB CN4E, CN11E for proper connection and correct as necessary.
5. Replace the drum unit.
6. Replace FRB.
7. Replace MFPB.

NOTICE
- Link to the layout drawings for related parts by each trouble code (S.57. C2A11, C2A12, C2A13, C2A14)

### 3.7.14 C2A21, C2A22, C2A23, C2A24

#### (1) Contents

| | |
|---|---|
| Trouble type | • C2A21: Toner cartridge/C new release failure<br>• C2A22: Toner cartridge/M new release failure<br>• C2A23: Toner cartridge/Y new release failure<br>• C2A24: Toner cartridge/K new release failure |
| Rank | C |
| Trouble detection condition | The status with the new unit is not cleared after the new toner cartridge is set. |
| Trouble isolation | - |
| Relevant electrical parts | • Toner cartridge/ C,M,Y,K<br>• MFP board (MFPB) |

#### (2) Procedure

1. Clean the connection between the toner cartridge and the machine if dirty.
2. Check the connector between the toner cartridge-relay CN79-MFPB CN35E for proper connection and correct as necessary.
3. Reinstall the toner cartridge.
4. Check the harness for proper connection and correct as necessary.
5. Replace the toner cartridge.
6. Replace MFPB.

NOTICE
- Link to the layout drawings for related parts by each trouble code (S.58. C2A21, C2A22, C2A23, C2A24)

## 3.8 C3###

### 3.8.1 C3101, C3103

#### (1) Contents

| | |
|---|---|
| Trouble type | • C3101: Pressure roller pressure failure<br>• C3103: Pressure roller release failure |
| Rank | B |
| Trouble detection condition | C3101:<br>• The encoder pulse does not change even after the lapse of a predetermined period of time after the fusing pressure motor (M11) has started rotating during pressure by the pressure roller.<br>• The fusing pressure home sensor (PS38) is not blocked even after the lapse of a predetermined period of time after the fusing pressure motor (M11) has started rotating during pressure by the pressure roller. |
| | C3103:<br>• The encoder pulse does not change even after the lapse of a predetermined period of time after the fusing pressure motor (M11) has started rotating during retraction of the pressure roller.<br>• The fusing pressure home sensor (PS38) is not unblocked even after the lapse of a predetermined period of time after the fusing pressure motor (M11) has started rotating during retraction of the pressure roller. |
| Trouble isolation | - |
| Relevant electrical parts | • Fusing unit<br>• Fusing pressure motor (M11)<br>• Fusing pressure home sensor (PS38)<br>• MFP board (MFPB) |

#### (2) Procedure

1. Check the connector between M11-MFPB CN15EA for proper connection and correct as necessary.
2. Check the connector between the fusing unit-relay CN98, CN99, CN104-MFPB CN13E for proper connection and correct as necessary.
3. PS38 I/O check, sensor check
   - Control signal: MFPB CN13E-12 (ON)
   - Location of electrical component: 11-C
4. M11 operation check
   - Control signal: MFPB CN15EA-5 to 8
   - Location of electrical component: 6-C
5. Replace M11.
6. Replace the fusing unit.
7. Replace MFPB.

NOTICE
- Link to the wiring diagram (N.1. bizhub C368/C308/C258)
- Link to the layout drawings for related parts by each trouble code (S.59. C3101, C3103)

### 3.8.2 C3201, C3202

#### (1) Contents

| | |
|---|---|
| Trouble type | • C3201: Fusing motor failure to turn<br>• C3202: Fusing motor turning at abnormal timing |
| Rank | B |
| Trouble detection condition | • C3201: The motor lock signal remains HIGH for a predetermined continuous period of time while the motor is turning.<br>• C3202: The motor lock signal remains LOW for a predetermined continuous period of time while the motor remains stationary. |
| Trouble isolation | - |
| Relevant electrical parts | • Fusing motor (M3)<br>• MFP board (MFPB) |

#### (2) Procedure

1. Check the connector between M3-MFPB CN8E for proper connection and correct as necessary.
2. Check the loading status of the fusing unit drive, and correct the error as necessary.
3. M3 operation check
   - Control signal: MFPB CN8E-9 (REM), MFPB CN8E-12 (LOCK)
   - Location of electrical component: 2-C
4. Replace M3.
5. Replace MFPB.

NOTICE
- Link to the wiring diagram (N.1. bizhub C368/C308/C258)
- Link to the layout drawings for related parts by each trouble code (S.60. C3201, C3202)

### 3.8.3 C3302

#### (1) Contents

| | |
|---|---|
| Trouble type | C3302: Paper cooling fan failure to turn |
| Rank | B |

| | |
|---|---|
| Trouble detection condition | The fan lock signal remains HIGH for a predetermined continuous period of time while the fan is turning. |
| Trouble isolation | - |
| Relevant electrical parts | • Paper cooling fan (FM8)<br>• MFP board (MFPB) |

#### (2) Procedure

1. Check the connector between FM8-relay CN106-MFPB CN15EB for proper connection and correct as necessary.
2. Check the fan for possible overload and correct as necessary.
3. FM8 operation check
   - Control signal: MFPB CN15EB-9 (REM), MFPB CN15EB-11 (LOCK)
   - Location of electrical component: 9-C
4. Replace FM8.
5. MFPB ICP3E conduction check
6. Replace MFPB.

NOTICE
- Link to the wiring diagram (N.1. bizhub C368/C308/C258)
- Link to the layout drawings for related parts by each trouble code (S.61. C3302)

### 3.8.4 C3425

#### (1) Contents

| | |
|---|---|
| Trouble type | C3425: Fusing warm-up trouble |
| Rank | A |
| Trouble detection condition | • Detected temperature of the heating roller temperature sensor (TEMS) does not go up a given range of temperature even after a lapse of given period of time at warm up.<br>• The temperature detected by the heating roller temperature sensor (TEMS) does not shift from the pre-standby state or the post-print color printing-enable wait state even after the lapse of a predetermined period of time after the completion of warm-up. |
| Trouble isolation | - |
| Relevant electrical parts | • Fusing unit<br>• Heating roller temperature sensor (TEMS)<br>• DC power supply (DCPU)<br>• MFP board (MFPB) |

#### (2) Procedure

1. Check the fusing unit for correct installation (whether it is secured in position).
2. Check the open/close operation of the right door.
3. Check the fusing unit and DCPU for proper connection and correct or change as necessary.
4. Replace the fusing unit.
5. Replace MFPB.
6. Replace DCPU.

NOTICE
- Link to the layout drawings for related parts by each trouble code (S.62. C3425)

### 3.8.5 C3722, C3725, C3726

#### (1) Contents

| | |
|---|---|
| Trouble type | • C3722: Fusing abnormally high temperature detection (Edge of the heating roller)<br>• C3725: Fusing abnormally high temperature detection (Main of the heating side)<br>• C3726: Fusing abnormally high temperature detection (Center of the heating side) |
| Rank | A |
| Trouble detection condition | • C3722: Detected temperature of the heating roller thermistor/1 (TH1) goes beyond a given temperature for a given period of time consecutively.<br>• C3725: Detected temperature of the heating roller temperature sensor (TEMS) goes beyond a given temperature for a given period of time consecutively.<br>• C3726: Detected temperature of the heating roller thermistor/2 (TH2) goes beyond a given temperature for a given period of time consecutively. |
| Trouble isolation | - |
| Relevant electrical parts | • Fusing unit<br>• C3722: Heating roller thermistor/1 (TH1)<br>• C3725: Heating roller temperature sensor (TEMS)<br>• C3726: Heating roller thermistor/2 (TH2)<br>• MFP board (MFPB) |

#### (2) Procedure

1. Check the fusing unit for correct installation (whether it is secured in position).
2. Check the open/close operation of the right door.
3. Check the fusing unit and MFPB for proper connection and correct or change as necessary.
4. Replace the fusing unit.
5. Replace MFPB.

NOTICE
- Link to the layout drawings for related parts by each trouble code (S.63. C3722, C3922)
- Link to the layout drawings for related parts by each trouble code (S.64. C3725, C3825, C3925, C392A)
- Link to the layout drawings for related parts by each trouble code (S.65. C3726, C3826, C3926)

### 3.8.6 C3731

#### (1) Contents

| | |
|---|---|
| Trouble type | C3731: Fusing abnormally high temperature detection (Hard protector) |
| Rank | A |
| Trouble detection condition | The hard protector signal error is detected for a given period of time consecutively. |
| Trouble isolation | - |
| Relevant electrical parts | • Fusing unit<br>• Heating roller thermistor/1 (TH1)<br>• Heating roller temperature sensor (TEMS)<br>• Heating roller thermistor/2 (TH2)<br>• MFP board (MFPB) |

#### (2) Procedure

1. Check the fusing unit for correct installation (whether it is secured in position).
2. Check the open/close operation of the right door.
3. Check the fusing unit and MFPB for proper connection and correct or change as necessary.
4. Replace the fusing unit.
5. Replace MFPB.

NOTICE
- Link to the layout drawings for related parts by each trouble code (S.66. C3731)

### 3.8.7 C3825, C3826

#### (1) Contents

| | |
|---|---|
| Trouble type | • C3825: Fusing abnormally low temperature detection (Main of the heating roller)<br>• C3826: Fusing abnormally low temperature detection (Center of the heating roller) |
| Rank | A |
| Trouble detection condition | • C3825: The heating roller temperature sensor (TEMS) continues to detect a temperature lower than a predetermined one for a predetermined period of time.<br>• C3826: The heating roller thermistor/2 (TH2) continues to detect a temperature lower than a predetermined one for a predetermined period of time. |
| Trouble isolation | - |
| Relevant electrical parts | • Fusing unit<br>• C3825: Heating roller temperature sensor (TEMS)<br>• C3826: Heating roller thermistor/2 (TH2)<br>• MFP board (MFPB) |

#### (2) Procedure

1. Check the fusing unit for correct installation (whether it is secured in position).
2. Check the open/close operation of the right door.
3. Check the fusing unit and MFPB for proper connection and correct or change as necessary.
4. Replace the fusing unit.
5. Replace MFPB.

NOTICE
- Link to the layout drawings for related parts by each trouble code (S.64. C3725, C3825, C3925, C392A)
- Link to the layout drawings for related parts by each trouble code (S.65. C3726, C3826, C3926)

### 3.8.8 C3922, C3925, C3926

#### (1) Contents

| | |
|---|---|
| Trouble type | • C3922: Fusing sensor wire breaks detection (Edge of the heating roller)<br>• C3925: Fusing sensor wire breaks detection (Main of the heating roller)<br>• C3926: Fusing sensor wire breaks detection (Center of the heating roller) |
| Rank | A |
| Trouble detection condition | • C3922: After a predetermined period of time after the warm-up stage is started, the heating roller thermistor/1 (TH1) voltage does not decrease by predetermined steps (temperature rise) within a predetermined period of time.<br>• C3925: After a predetermined period of time after the warm-up stage is started, the heating roller temperature sensor (TEMS) voltage does not increase by predetermined steps (temperature rise) within a predetermined period of time.<br>• C3926: After a predetermined period of time after the warm-up stage is started, the heating roller thermistor/2 (TH2) voltage does not decrease by predetermined steps (temperature rise) within a predetermined period of time. |
| Trouble isolation | - |

| | |
|---|---|
| Relevant electrical parts | • Fusing unit<br>• C3922: Heating roller thermistor/1 (TH1)<br>• C3925: Heating roller temperature sensor (TEMS)<br>• C3926: Heating roller thermistor/2 (TH2)<br>• MFP board (MFPB) |

#### (2) Procedure

1. Check the fusing unit for correct installation (whether it is secured in position).
2. Check the open/close operation of the right door.
3. Check the fusing unit and MFPB for proper connection and correct or change as necessary.
4. Replace the fusing unit.
5. Replace MFPB.

NOTICE

- Link to the layout drawings for related parts by each trouble code (S.63. C3722, C3922)
- Link to the layout drawings for related parts by each trouble code (S.64. C3725, C3825, C3925, C392A)
- Link to the layout drawings for related parts by each trouble code (S.65. C3726, C3826, C3926)

### 3.8.9 C392A

#### (1) Contents

| | |
|---|---|
| Trouble type | C392A: Heating roller temperature sensor contamination (Main of the heating roller) |
| Rank | A |
| Trouble detection condition | When the machine is in standby mode after a predetermined period of time after the warm-up stage is started, detected temperature of the heating roller temperature sensor (TEMS) higher than a given temperature for a given period of time consecutively. |
| Trouble isolation | - |
| Relevant electrical parts | • Fusing unit<br>• Heating roller temperature sensor (TEMS)<br>• MFP board (MFPB) |

#### (2) Procedure

1. Wipe the TEMS clean of dirt if any.
   <Cleaning procedure>
   - Clear away a dirt or a foreign object on the sensor with a cotton swab.
   - When a dirt is left even if you cleaned the sensor by above procedure, clear away a dirt or a foreign object on the sensor using a cotton swab dampened with the alcohol. And, wipe off the sensor with a dry cotton swab afterwards.
2. Check the TEMS for installed position and proper connector connection.
3. Check the connection of the fusing unit.
4. Check the fusing unit and MFPB for proper connection and correct or change as necessary.
5. Replace the fusing unit.
6. Replace MFPB.

NOTICE

- Link to the layout drawings for related parts by each trouble code (S.64. C3725, C3825, C3925, C392A)

### 3.8.10 C392B

#### (1) Contents

| | |
|---|---|
| Trouble type | C392B: Fusing sensor wire breaks detection (Center of the heating roller) |
| Rank | A |
| Trouble detection condition | The difference between the temperature corrected by the heating roller thermistor/1 (TH1) and the temperature detected by the heating roller thermistor/2 (TH2) exceeds a predetermined value. |
| Trouble isolation | - |
| Relevant electrical parts | • Fusing unit<br>• Heating roller thermistor/1 (TH1)<br>• Heating roller thermistor/2 (TH2)<br>• MFP board (MFPB) |

#### (2) Procedure

1. Check the fusing unit for correct installation (whether it is secured in position).
2. Check the open/close operation of the right door.
3. Check the fusing unit and MFPB for proper connection and correct or change as necessary.
4. Replace the fusing unit.
5. Replace MFPB.

NOTICE

- Link to the layout drawings for related parts by each trouble code (S.67. C392B)

## 3.9 C4###

### 3.9.1 C4091

#### (1) Contents

| | |
|---|---|
| Trouble type | C4091: I/F communication error |

| | |
|---|---|
| Rank | C |
| Trouble detection condition | Communication between the controller control unit and the engine control unit is not completed even after the lapse of a predetermined period of time. |
| Trouble isolation | - |
| Relevant electrical parts | MFP board (MFPB) |

#### (2) Procedure

1. Reboot the machine.
2. Replace MFPB.

NOTICE

- Link to the layout drawings for related parts by each trouble code (S.68. C4091 - C40A4, C5601, C5605, C5606, CA051 - CA053, CC151, CC152, CC15C, CC170 - CC186, CC191 - CC216, CD211 - CD261, CD401 - CD413, CD701 - CD703, CD705, CD706, CE001, CE003 - CE305, CEEE1, CEEE3)

### 3.9.2 C40A1, C40A2, C40A3, C40A4

#### (1) Contents

| | |
|---|---|
| Trouble type | • C40A1: Mechanical controller sub-CPU communication error<br>• C40A2: Mechanical controller PF communication data error<br>• C40A3: Mechanical controller PF transmission timeout<br>• C40A4: Mechanical controller PF communication pulse error |
| Rank | C |
| Trouble detection condition | A CPU communication error is detected. |
| Trouble isolation | - |
| Relevant electrical parts | MFP board (MFPB) |

#### (2) Procedure

1. Turn OFF the main power switch, disconnect and then connect the power cord. Wait for 10 sec. or more after connect the power cord, and turn ON the main power switch.
2. Rewrite the firmware.
3. Replace MFPB.

NOTICE

- Link to the layout drawings for related parts by each trouble code (S.68. C4091 - C40A4, C5601, C5605, C5606, CA051 - CA053, CC151, CC152, CC15C, CC170 - CC186, CC191 - CC216, CD211 - CD261, CD401 - CD413, CD701 - CD703, CD705, CD706, CE001, CE003 - CE305, CEEE1, CEEE3)

### 3.9.3 C4101

#### (1) Contents

| | |
|---|---|
| Trouble type | C4101: Polygon motor rotation trouble |
| Rank | B |
| Trouble detection condition | • The polygon motor fails to turn stably even after the lapse of a given period of time after activating and changing rotation speed the polygon motor.<br>• Motor lock signal detects HIGH for a given period time consecutively during the polygon motor is rotating. |
| Trouble isolation | - |
| Relevant electrical parts | • PH unit<br>• Front side board (FRB)<br>• MFP board (MFPB) |

#### (2) Procedure

1. Check the connector between the PH unit-FRB CN17 for proper connection and correct as necessary.
2. Replace the PH unit.
3. FRB fuse conduction check
4. Replace FRB.
5. Replace MFPB.

NOTICE

- Link to the layout drawings for related parts by each trouble code (S.69. C4101)

### 3.9.4 C4501

#### (1) Contents

| | |
|---|---|
| Trouble type | C4501: Laser malfunction |
| Rank | B |
| Trouble detection condition | • SOS signal is not detected even after the lapse of a given period of time after starting the laser output.<br>• SOS signal is not detected for a given period of time during printing or IDC sensor adjustment. |
| Trouble isolation | - |

| | |
|---|---|
| Relevant electrical parts | • PH unit<br>• MFP board (MFPB) |

**(2) Procedure**

1. Check the connector between the PH unit-relay CN63-MFPB CN20E for proper connection and correct as necessary.
2. Replace the PH unit.
3. Replace MFPB.

NOTICE
- Link to the layout drawings for related parts by each trouble code (S.70. C4501)

## 3.10 C5###

### 3.10.1 C5102, C5103

**(1) Contents**

| | |
|---|---|
| Trouble type | • C5102: Transport motor failure to turn<br>• C5103: Transport motor turning at abnormal timing |
| Rank | B |
| Trouble detection condition | • C5102: The motor lock signal remains HIGH for a predetermined continuous period of time while the motor is turning.<br>• C5103: The motor lock signal remains LOW for a predetermined continuous period of time while the motor remains stationary. |
| Trouble isolation | - |
| Relevant electrical parts | • Transport motor (M1)<br>• MFP board (MFPB) |

**(2) Procedure**

1. Check the connector between M1-MFPB CN8E for proper connection and correct as necessary.
2. Check the loading status of the transfer belt drive, and correct the error as necessary.
3. M1 operation check
   - Control signal: MFPB CN8E-3 (REM), MFPB CN8E-6 (LOCK)
   - Location of electrical component: 2-C
4. Replace M1.
5. Replace MFPB.

NOTICE
- Link to the wiring diagram (N.1. bizhub C368/C308/C258)
- Link to the layout drawings for related parts by each trouble code (S.71. C5102, C5103)

### 3.10.2 C5351

**(1) Contents**

| | |
|---|---|
| Trouble type | C5351: Power supply cooling fan motor failure to turn |
| Rank | B |
| Trouble detection condition | The fan lock signal remains HIGH for a predetermined continuous period of time while the fan is turning. |
| Trouble isolation | - |
| Relevant electrical parts | • Power supply cooling fan (FM1)<br>• MFP board (MFPB) |

**(2) Procedure**

1. Check the connector between FM1-relay CN26-MFPB CN24EA for proper connection and correct as necessary.
2. Check the fan for possible overload and correct as necessary.
3. FM1 operation check
   - Control signal: MFPB CN24EA-9 (REM), MFPB CN24EA-11 (LOCK)
   - Location of electrical component: 25-J
4. Replace FM1.
5. Replace MFPB.

NOTICE
- Link to the wiring diagram (N.1. bizhub C368/C308/C258)
- Link to the layout drawings for related parts by each trouble code (S.72. C5351)

### 3.10.3 C5355

**(1) Contents**

| | |
|---|---|
| Trouble type | C5355: Toner cartridge cooling fan failure to turn |
| Rank | B |
| Trouble detection condition | The fan lock signal remains HIGH for a predetermined continuous period of time while the fan is turning. |
| Trouble isolation | - |

| | |
|---|---|
| Relevant electrical parts | • Toner cartridge cooling fan (FM4)<br>• MFP board (MFPB) |

#### (2) Procedure

1. Check the connector between FM4-relay CN157-MFPB CN15EB for proper connection and correct as necessary.
2. Check the fan for possible overload and correct as necessary.
3. FM4 operation check
   - Control signal: MFPB CN15EB-6 (REM), MFPB CN15EB-8 (LOCK)
   - Location of electrical component: 9-C
4. Replace FM4.
5. Replace MFPB.

NOTICE
- Link to the wiring diagram (N.1. bizhub C368/C308/C258)
- Link to the layout drawings for related parts by each trouble code (S.73. C5355)

### 3.10.4 C5360

#### (1) Contents

| | |
|---|---|
| Trouble type | C5360: Clean unit fan failure to turn (When CU-101 is installed) |
| Rank | B |
| Trouble detection condition | The fan lock signal remains HIGH for a predetermined continuous period of time while the fan is turning. |
| Trouble isolation | - |
| Relevant electrical parts | • Exhaust fan/1 (FM14)<br>• Exhaust fan/2 (FM15)<br>• Suction fan (FM16)<br>• Clean unit drive board (CUDB)<br>• MFP board (MFPB) |

#### (2) Procedure

1. Check the connector between CUDB CN1-MFPB CN32E for proper connection and correct as necessary.
2. Check the connector between FM14-CUDB CN3, FM15-CUDB CN2, FM16-relay CN183-CUDB CN4 for proper connection and correct as necessary.
3. Check the fan for possible overload and correct as necessary.
4. FM14, FM15, FM16 operation check
   - Load check: Check code42, Multi code 4
   - Control signal: CUDB CN3 (FM14), CUDB CN2 (FM15), CUDB CN4 (FM16)
   - Location of electrical component: 14-X
5. Replace the defective fan. (FM14 / FM15 / FM16)
6. Replace CUDB.
7. MFPB ICP14E conduction check
8. Replace MFPB.

NOTICE
- Link to the wiring diagram (N.1. bizhub C368/C308/C258)
- Link to the layout drawings for related parts by each trouble code (S.74. C5360)

### 3.10.5 C5370

#### (1) Contents

| | |
|---|---|
| Trouble type | C5370: Rear side cooling fan failure to turn |
| Rank | C |
| Trouble detection condition | The fan lock signal remains HIGH for a predetermined continuous period of time while the fan is turning. |
| Trouble isolation | - |
| Relevant electrical parts | • Rear side cooling fan (FM3)<br>• MFP board (MFPB) |

#### (2) Procedure

1. Check the connector between FM3-relay CN301-MFPB CN13 for proper connection and correct as necessary.
2. Check the fan for possible overload and correct as necessary.
3. FM3 operation check
   - Control signal: MFPB CN13-3 (LOCK), MFPB CN13-4 (REM)
   - Location of electrical component: 20-C
4. Replace FM3.
5. Replace MFPB.

NOTICE
- Link to the wiring diagram (N.1. bizhub C368/C308/C258)
- Link to the layout drawings for related parts by each trouble code (S.75. C5370)

### 3.10.6 C5501

#### (1) Contents

| | |
|---|---|
| Trouble type | C5501: AC signal abnormality |
| Rank | C |
| Trouble detection condition | The zero cross signal is not input during fusing phase control. |
| Trouble isolation | - |
| Relevant electrical parts | • Fusing unit<br>• DC power supply (DCPU)<br>• MFP board (MFPB) |

#### (2) Procedure

1. Check the fusing unit for correct installation (whether it is secured in position).
2. Check the fusing unit and DCPU for proper connection and correct or change as necessary.
3. Replace the fusing unit.
4. Replace MFPB.
5. Replace DCPU.

NOTICE
- Link to the layout drawings for related parts by each trouble code (S.76. C5501)

### 3.10.7 C5601

#### (1) Contents

| | |
|---|---|
| Trouble type | C5601: Engine control malfunction |
| Rank | C |
| Trouble detection condition | Engine control malfunction is detected with port monitor control. |
| Trouble isolation | - |
| Relevant electrical parts | MFP board (MFPB) |

#### (2) Procedure

1. Check the connectors on MFPB for proper connection and correct as necessary.
2. Rewrite the firmware.
3. Replace MFPB.

NOTICE
- Link to the layout drawings for related parts by each trouble code (S.68. C4091 - C40A4, C5601, C5605, C5606, CA051 - CA053, CC151, CC152, CC15C, CC170 - CC186, CC191 - CC216, CD211 - CD261, CD401 - CD413, CD701 - CD703, CD705, CD706, CE001, CE003 - CE305, CEEE1, CEEE3)

### 3.10.8 C5603

#### (1) Contents

| | |
|---|---|
| Trouble type | C5603: Front side communication error |
| Rank | C |
| Trouble detection condition | Communication error is detected in front side board. |
| Trouble isolation | - |
| Relevant electrical parts | • Front side board (FRB)<br>• PH unit<br>• MFP board (MFPB) |

#### (2) Procedure

1. Reboot the machine.
2. Check the connector between FRB CN5-PH unit for proper connection and correct as necessary.
3. Check the connector between FRB CN2-MFPB CN10E for proper connection and correct as necessary.
4. Replace FRB.
5. Replace the PH unit.
6. MFPB ICP8E conduction check
7. Replace MFPB.

NOTICE
- Link to the layout drawings for related parts by each trouble code (S.77. C5603, C5610, C5611)

### 3.10.9 C5604

#### (1) Contents

| | |
|---|---|
| Trouble type | C5604: PH configuration fault |
| Rank | C |
| Trouble detection condition | A disagreement in PH unit configuration is detected. |

| | |
|---|---|
| Trouble isolation | - |
| Relevant electrical parts | • PH unit<br>• MFP board (MFPB) |

### (2) Procedure

1. Check the type of the installed PH unit and replace it if it is a wrong one.
2. Check the connector between the PH unit-MFPB for proper connection and correct as necessary.
3. Replace MFPB.

NOTICE

- Link to the layout drawings for related parts by each trouble code (S.78. C5604)

## 3.10.10 C5605, C5606

### (1) Contents

| | |
|---|---|
| Trouble type | • C5605: Engine communication data error<br>• C5606: Engine transmission timeout |
| Rank | C |
| Trouble detection condition | A communication error is detected between CPUs. |
| Trouble isolation | - |
| Relevant electrical parts | MFP board (MFPB) |

### (2) Procedure

1. Turn OFF the main power switch, disconnect and then connect the power cord. Wait for 10 sec. or more after connect the power cord, and turn ON the main power switch.
2. Rewrite the firmware.
3. MFPB ICP8E conduction check
4. Replace MFPB.

NOTICE

- Link to the layout drawings for related parts by each trouble code (S.68. C4091 - C40A4, C5601, C5605, C5606, CA051 - CA053, CC151, CC152, CC15C, CC170 - CC186, CC191 - CC216, CD211 - CD261, CD401 - CD413, CD701 - CD703, CD705, CD706, CE001, CE003 - CE305, CEEE1, CEEE3)

## 3.10.11 C5610

### (1) Contents

| | |
|---|---|
| Trouble type | C5610: PH LD drive communication error |
| Rank | C |
| Trouble detection condition | LD drive write data and read data disagree with each other a predetermined number of consecutive times. |
| Trouble isolation | - |
| Relevant electrical parts | • Front side board (FRB)<br>• PH unit<br>• MFP board (MFPB) |

### (2) Procedure

1. Reboot the machine.
2. Check the connector between FRB CN5-PH unit for proper connection and correct as necessary.
3. Check the connector between FRB CN2-MFPB CN10E for proper connection and correct as necessary.
4. Replace FRB.
5. Replace the PH unit.
6. Replace MFPB.

NOTICE

- Link to the layout drawings for related parts by each trouble code (S.77. C5603, C5610, C5611)

## 3.10.12 C5611

### (1) Contents

| | |
|---|---|
| Trouble type | C5611: PH EEPROM communication error |
| Rank | C |
| Trouble detection condition | Results of two readings of the EEPROM data disagree with each other. |
| Trouble isolation | - |
| Relevant electrical parts | • Front side board (FRB)<br>• PH unit<br>• MFP board (MFPB) |

### (2) Procedure

1. Reboot the machine.

2. Check the connector between FRB CN5-PH unit for proper connection and correct as necessary.
3. Check the connector between FRB CN2-MFPB CN10E for proper connection and correct as necessary.
4. Replace FRB.
5. Replace the PH unit.
6. Replace MFPB.

NOTICE
- Link to the layout drawings for related parts by each trouble code (S.77. C5603, C5610, C5611)

## 3.11 C6###

### 3.11.1 C6001

#### (1) Contents

| | |
|---|---|
| Trouble type | C6001: DF related configuration error 1 |
| Rank | C |
| Trouble detection condition | Inconsistency in the configuration with the installed DF is detected on the main body. |
| Trouble isolation | - |
| Relevant electrical parts | • DF control board (DFCB)<br>• Dual scan image processing board (DSIPB)<br>• MFP board (MFPB) |

#### (2) Procedure

1. Check the type of the installed DF and replace it if it is a wrong one.
2. Check to see the [Service mode] -> [System 2] -> [ADF Settings] is correct. It corrects, when a model is different.
3. Correct the harness connection between DFCB and DSIPB if faulty.
4. Check the connector between DSIPB CN01-MFPB CN22 for proper connection and correct as necessary.
5. Replace DFCB.
6. Replace DSIPB.
7. Replace MFPB.

NOTICE
- Link to the layout drawings for related parts by each trouble code (S.79. C6001)

### 3.11.2 C6002

#### (1) Contents

| | |
|---|---|
| Trouble type | C6002: DF related configuration error 2 |
| Rank | C |
| Trouble detection condition | Inconsistency in the configuration with the installed DF is detected on the main body. |
| Trouble isolation | - |
| Relevant electrical parts | • DF control board (DFCB)<br>• Dual scan image processing board (DSIPB) |

#### (2) Procedure

1. Check the type of the installed DF and replace it if it is a wrong one.
2. Correct the harness connection between DFCB and DSIPB if faulty.
3. Check the connectors of the dual scan image processing board (DSIPB) for proper connection, and correct as necessary. (Direction of the point of contact and connection state of the flat cable in particular)

NOTICE
- Link to the layout drawings for related parts by each trouble code (S.80. C6002)

### 3.11.3 C6102, C6103

#### (1) Contents

| | |
|---|---|
| Trouble type | • C6102: Drive system home sensor malfunction<br>• C6103: Slider over running |
| Rank | B |
| Trouble detection condition | C6102:<br>• The scanner home sensor (PS201) is unable to detect the scanner located at its home position.<br>• The scanner home sensor (PS201) is unable to detect a scanner even when the scanner motor (M201) has been driven to move the scanner over the maximum travelling distance.<br>• The scanner home sensor (PS201) detects the scanner when the scanner has moved the maximum travelling distance from the position, at which it blocks the scanner home sensor (PS201). |
| | C6103: The scanner home sensor (PS201) detects the scanner at its home position during a period of time that begins with the time when a prescan command and a scan preparation command are executed and ends when a home return command is executed. |
| Trouble isolation | Scanner |

| | |
|---|---|
| Relevant electrical parts | • Scanner home sensor (PS201)<br>• Scanner motor (M201)<br>• Scanner drive board (SCDB)<br>• MFP board (MFPB) |

#### (2) Procedure

1. Correct or change the scanner drive (pulley, gear, belt) if it is faulty.
2. Correct the scanner motor set screw if loose.
3. Adjust [Image Position: Leading Edge] and [Sub Scan Zoom Adj.].
4. Check the connector between M201-SCDB CN4 for proper connection and correct as necessary.
5. Check the connector between PS201-SCDB CN6 for proper connection and correct as necessary.
6. Check the connector between SCDB CN2-MFPB CN12E for proper connection and correct as necessary.
7. PS201 I/O check, sensor check
   - Control signal: SCDB CN6-3 (ON)
   - Location of electrical component: 25-P
8. M201 operation check
   - Control signal: SCDB CN4-1 to 4
   - Location of electrical component: 26-P
9. Replace SCDB.
10. Replace MFPB.

NOTICE
- Link to the wiring diagram (N.1. bizhub C368/C308/C258)
- Link to the layout drawings for related parts by each trouble code (S.81. C6102, C6103)

### 3.11.4 C6104, C6105

#### (1) Contents

| | |
|---|---|
| Trouble type | • C6104: Back side cleaning home sensor abnormality (initial) (When DF-704 is installed)<br>• C6105: Back side cleaning home sensor abnormality (normal) (When DF-704 is installed) |
| Rank | B |
| Trouble detection condition | C6104:<br>• The CIS cleaning sensor (PS7) does not change from H to L even after the lapse of a given period of time after the home position detecting operation is started at the initial operation.<br>• The CIS cleaning sensor (PS7) does not change from L to H even after the lapse of a given period of time after the home position detecting operation is started at the initial operation. |
| | C6105: At the time of operation other than the initial operation, the CIS cleaning sensor (PS7) error is detected. |
| Trouble isolation | Scanner |
| Relevant electrical parts | • CIS cleaning sensor (PS7)<br>• CIS cleaning motor (M5)<br>• DF control board (DFCB) |

#### (2) Procedure

1. Check if the opening and closing guide is firmly closed.
2. Check the connector between M5-DFCB J9 for proper connection and correct as necessary.
3. Check the connector of M5 for proper drive coupling and correct as necessary.
4. Check the connector between PS7-DFCB J13 for proper connection and correct as necessary.
5. PS7 I/O check, sensor check
   - Control signal: DFCB J13-3 (ON)
   - Location of electrical component: DF-704 1-G
6. M5 operation check
   - Control signal: DFCB J9-1 to 4
   - Location of electrical component: DF-704 6-G
7. Replace M5.
8. Replace DFCB.

NOTICE
- Link to the wiring diagram (N.2.2 DF-704)
- Link to the layout drawings for related parts by each trouble code (S.82. C6104, C6105)

### 3.11.5 C6704

#### (1) Contents

| | |
|---|---|
| Trouble type | C6704: Image input time out |
| Rank | C |
| Trouble detection condition | Image data is not input from the scanner to the MFP board (MFPB). |
| Trouble isolation | Scanner |
| Relevant electrical parts | • MFP board (MFPB)<br>• CCD board (CCDB) |

### (2) Procedure

1. Select [Service Mode] -> [State Confirmation] -> [Memory/Storage Adjustment] -> [Memory Bus Check] -> [Scanner -> Memory], and conduct the memory bus function.
2. Check the connector between CCDB CN3-MFPB CN1 for proper connection and correct as necessary.
3. Replace MFPB.
4. Replace CCDB.

NOTICE

- Link to the layout drawings for related parts by each trouble code (S.83. C6704, C6751, CDF50, CDF70, CDFA0)

## 3.11.6 C6751

### (1) Contents

| | |
|---|---|
| Trouble type | C6751: CCD gain adjustment failure |
| Rank | B |
| Trouble detection condition | • The adjustment value is 0 or 255 during a CCD clamp adjustment.<br>• The peak value of the output data is 64 or less during a CCD gain adjustment. |
| Trouble isolation | Scanner |
| Relevant electrical parts | • LED exposure unit<br>• CCD board (CCDB)<br>• MFP board (MFPB) |

### (2) Procedure

1. Check the connector between CCDB CN3-MFPB CN1 for proper connection and correct as necessary.
2. Check for possible extraneous light and correct as necessary.
3. Clean the lens, mirrors, CCD surface, and shading sheet if dirty.
4. Correct reflective mirror of the scanner if faulty, or change scanner mirror.
5. Replace CCDB.
6. Replace MFPB.

NOTICE

- Link to the layout drawings for related parts by each trouble code (S.83. C6704, C6751, CDF50, CDF70, CDFA0)

## 3.11.7 C6752

### (1) Contents

| | |
|---|---|
| Trouble type | C6752: ASIC clock input error (front side) |
| Rank | C |
| Trouble detection condition | When starting the machine, verification on reading and writing the predetermined value for image processing ASIC on CCD board (CCDB) was conducted, and verification failure was detected. |
| Trouble isolation | - |
| Relevant electrical parts | • CCD board (CCDB)<br>• MFP board (MFPB) |

### (2) Procedure

1. Correct the harness connection of CCDB if faulty.
2. Replace CCDB
3. Replace MFPB.

NOTICE

- Link to the layout drawings for related parts by each trouble code (S.84. C6752)

## 3.11.8 C6753

### (1) Contents

| | |
|---|---|
| Trouble type | C6753: ASIC clock input error (back side) (When DF-704 is installed) |
| Rank | C |
| Trouble detection condition | When starting the machine, verification on reading and writing the predetermined value for image processing ASIC on dual scan image processing board (DSIPB) was conducted, and verification failure was detected. |
| Trouble isolation | - |
| Relevant electrical parts | • CIS module (CIS)<br>• Dual scan image processing board (DSIPB)<br>• MFP board (MFPB) |

### (2) Procedure

1. Correct the harness connection between DFCB and DSIPB if faulty.
2. Correct the harness connection between DSIPB CN01-MFPB CN22 if faulty.
3. Replace CIS.
4. Replace DSIPB.
5. Replace MFPB.

NOTICE

- Link to the layout drawings for related parts by each trouble code (S.85. C6753)

### 3.11.9 C6754, C6755

#### (1) Contents

| | |
|---|---|
| Trouble type | • C6754: CIS clamp adjustment failure (When DF-704 is installed)<br>• C6755: CIS gain adjustment failure (When DF-704 is installed) |
| Rank | B |
| Trouble detection condition | • C6754: After the gain adjustment is performed at the start-up, the CIS clamp adjustment value is too high or too low.<br>• C6755: After the gain adjustment is performed at the start-up, the peak value of the output data is lower than a given value. |
| Trouble isolation | Scanner |
| Relevant electrical parts | • CIS module (CIS)<br>• Dual scan image processing board (DSIPB)<br>• CIS power supply (CISPU)<br>• MFP board (MFPB) |

#### (2) Procedure

1. Correct the harness connection between CIS and DSIPB if faulty.
2. Correct the harness connection between CIS J222-CISPU J2 if faulty.
3. Check for possible extraneous light and correct as necessary.
4. Clean the back side reading glass and the shading sheet if dirty.
5. Replace CIS.
6. Replace DSIPB.
7. Replace CISPU.
8. Replace MFPB.

NOTICE
- Link to the layout drawings for related parts by each trouble code (S.86. C6754, C6755)

### 3.11.10 C6756

#### (1) Contents

| | |
|---|---|
| Trouble type | C6756: CCD power-supply voltage malfunction |
| Rank | C |
| Trouble detection condition | Power is not supplied to CCD after the lapse of a given period of time after the main power switch or power key is turned ON or the machine recovers from the sleep mode. |
| Trouble isolation | - |
| Relevant electrical parts | • CCD board (CCDB)<br>• Scanner drive board (SCDB)<br>• DC power supply (DCPU) |

#### (2) Procedure

1. Correct the harness connection between CCDB CN5-SCDB CN5 if faulty.
2. Correct the harness connection between SCDB CN1-DCPU CN5 if faulty.
3. Replace CCDB.
4. Replace SCDB.
5. Replace DCPU.

NOTICE
- Link to the layout drawings for related parts by each trouble code (S.87. C6756)

### 3.11.11 C6901, C6902, C6903

#### (1) Contents

| | |
|---|---|
| Trouble type | • C6901: DSC board mount failure 1 (When SC-508 is installed)<br>• C6902: DSC board bus check NG1-1 (When SC-508 is installed)<br>• C6903: DSC board bus check NG1-2 (When SC-508 is installed) |
| Rank | C |
| Trouble detection condition | • C6901: When MFP detects that DSC board/1 (front side) is not properly installed.<br>• C6902, C6903: When DSC bus check (front side) detects an error. |
| Trouble isolation | - |
| Relevant electrical parts | • DSC board/1 (DSCB/1: SC-508)<br>• MFP board (MFPB) |

#### (2) Procedure

1. Correct the harness connection of DSCB/1 if faulty.
2. Replace DSCB/1.
3. Replace MFPB.

NOTICE
- Link to the layout drawings for related parts by each trouble code (S.88. C6901, C6902, C6903)

### 3.11.12 C6911, C6912, C6913

#### (1) Contents

| | |
|---|---|
| Trouble type | • C6911: DSC board mount failure 2 (When DF-704 + SC-508 is installed)<br>• C6912: DSC board bus check NG2-1 (When DF-704 + SC-508 is installed)<br>• C6913: DSC board bus check NG2-2 (When DF-704 + SC-508 is installed) |
| Rank | C |
| Trouble detection condition | • C6911: When MFP detects that DSC board/2 (back side) is not properly installed.<br>• C6912, C6913: When DSC bus check (back side) detects an error. |
| Trouble isolation | - |
| Relevant electrical parts | • DSC board/2 (DSCB/2; SC-508)<br>• Dual scan image processing board (DSIPB; DF-704)<br>• MFP board (MFPB) |

#### (2) Procedure

1. Correct the harness connection of DSCB/2 if faulty.
2. Correct the harness connection of DSIPB if faulty.
3. Replace DSCB/2.
4. Replace DSIPB.
5. Replace MFPB.

NOTICE

- Link to the layout drawings for related parts by each trouble code (S.89. C6911, C6912, C6913)

### 3.11.13 C6F01, C6F02, C6F03, C6F04, C6F05, C6F07, C6F08, C6F09, C6F0A, C6FFDC, C6FDD

#### (1) Contents

| | |
|---|---|
| Trouble type | • C6F01: Scanner sequence trouble 1<br>• C6F02: Scanner sequence trouble 2<br>• C6F03: Scanner sequence trouble 3<br>• C6F04: Scanner sequence trouble 4<br>• C6F05: Scanner sequence trouble 5<br>• C6F06: Scanner sequence trouble 6<br>• C6F07: Scanner sequence trouble 7<br>• C6F08: Scanner sequence trouble 8<br>• C6F09: Scanner sequence trouble 9<br>• C6F0A: Scanner sequence trouble 10<br>• C6FDC: Scanner sequence trouble DC<br>• C6FDD Scanner sequence trouble DD |
| Rank | • CF6F01 to C6F0A: C<br>• C6FDC, C6FDD: B |
| Trouble detection condition | The original transport interval becomes shorter than the predetermined value due to an original transport control error in original reading in DF. |
| Trouble isolation | Scanner |
| Relevant electrical parts | • MFP board (MFPB)<br>• DF control board (DFCB) |

#### (2) Procedure

1. Correct the harness connection between main body and DF if faulty.
2. Replace DFCB (DF-629/DF-704)
3. Replace MFPB.

NOTICE

- Link to the layout drawings for related parts by each trouble code (S.90. C6F01, C6F02, C6F03, C6F04, C6F05, C6F07, C6F08, C6F09, C6F0A, C6FFDC, C6FDD)

## 3.12 C8###

### 3.12.1 C8101

#### (1) Contents

| | |
|---|---|
| Trouble type | C8101: Before reading pressure welding alienation mechanism (When DF-629 or DF-704 is installed) |
| Rank | B |
| Trouble detection condition | <When DF-629 is installed><br>• During a pressure motion being performed, the document reading sensor (PS4) output does not change from H to L.<br>• During a retraction motion being performed, the document reading sensor (PS4) output does not change from L to H. |
| | <When DF-704 is installed><br>• During a pressure motion being performed, the document reading sensor (PS6) output does not change from H to L.<br>• During a retraction motion being performed, the document reading sensor (PS6) output does not change from L to H. |
| Trouble isolation | - |

| | |
|---|---|
| Relevant electrical parts | <When DF-629 is installed><br>• Reading roll release motor (M5)<br>• Document reading sensor (PS4)<br>• DF control board (DFCB) |
| | <When DF-704 is installed><br>• Reading roller release motor (M4)<br>• Document reading sensor (PS6)<br>• DF control board (DFCB) |

#### (2) Procedure

##### (a) When DF-629 is installed

1. Check the connector between M5-DFCB J18 for proper connection and correct as necessary.
2. Check the connector of M5 for proper drive coupling and correct as necessary.
3. Check the connector between PS4-DFCB J10 for proper connection and correct as necessary.
4. PS4 I/O check, sensor check
   - Control signal: DFCB J10-3 (ON)
   - Location of electrical component: DF-629 2-G
5. M5 operation check
   - Control signal: DFCB J18-4 to 5
   - Location of electrical component: DF-629 2-G
6. Replace M5.
7. Replace DFCB.

NOTICE
- Link to the wiring diagram (N.2.1 DF-629)
- Link to the layout drawings for related parts by each trouble code (S.91.1 DF-629)

##### (b) When DF-704 is installed

1. Check the connector between M4-DFCB J18 for proper connection and correct as necessary.
2. Check the connector of M4 for proper drive coupling and correct as necessary.
3. Check the connector between PS6-DFCB J10 for proper connection and correct as necessary.
4. PS6 I/O check, sensor check
   - Control signal: DFCB J10-3 (ON)
   - Location of electrical component: DF-704 2-G
5. M4 operation check
   - Control signal: DFCB J18-4 to 5
   - Location of electrical component: DF-704 1-G
6. Replace M4.
7. Replace DFCB.

NOTICE
- Link to the wiring diagram (N.2.2 DF-704)
- Link to the layout drawings for related parts by each trouble code (S.91.2 DF-704)

### 3.12.2 C8107

#### (1) Contents

| | |
|---|---|
| Trouble type | C8107: Glass cleaning mechanism trouble (When DF-629 or DF-704 is installed) |
| Rank | B |
| Trouble detection condition | <When DF-629 is installed><br>The document reading glass cleaning sensor (PS12) is not turned ON after the set period of time has elapsed after the glass cleaning motor (M4) is turned ON. |
| | <When DF-704 is installed><br>The document reading glass cleaning sensor (PS13) is not turned ON after the set period of time has elapsed after the document reading glass cleaning motor (M6) is turned ON. |
| Trouble isolation | - |
| Relevant electrical parts | <When DF-629 is installed><br>• Glass cleaning motor (M4)<br>• Document reading glass cleaning sensor (PS12)<br>• DF control board (DFCB) |
| | <When DF-704 is installed><br>• Document reading glass cleaning motor (M6)<br>• Document reading glass cleaning sensor (PS13)<br>• DF control board (DFCB) |

#### (2) Procedure

##### (a) When DF-629 is installed

1. Check the connector between M4-DFCB J8 for proper connection and correct as necessary.
2. Check the connector of M4 for proper drive coupling and correct as necessary.
3. Check the connector between PS12-DFCB J15 for proper connection and correct as necessary.
4. PS12 I/O check, sensor check
   - Control signal: DFCB J15-5 (ON)
   - Location of electrical component: DF-629 3-G
5. M4 operation check

- Control signal: DFCB J8-1 to 4
- Location of electrical component: DF-629 1 to 2-B

6. Replace M4.
7. Replace DFCB.

NOTICE
- Link to the wiring diagram (N.2.1 DF-629)
- Link to the layout drawings for related parts by each trouble code (S.92.1 DF-629)

#### (b) When DF-704 is installed

1. Check the connector between M6-DFCB J8 for proper connection and correct as necessary.
2. Check the connector of M6 for proper drive coupling and correct as necessary.
3. Check the connector between PS13-DFCB J15 for proper connection and correct as necessary.
4. PS13 I/O check, sensor check
   - Control signal: DFCB J15-5 (ON)
   - Location of electrical component: DF-704 3-G
5. M6 operation check
   - Control signal: DFCB J8-1 to 4
   - Location of electrical component: DF-704 1-B
6. Replace M6.
7. Replace DFCB.

NOTICE
- Link to the wiring diagram (N.2.2 DF-704)
- Link to the layout drawings for related parts by each trouble code (S.92.2 DF-704)

### 3.12.3 C8302

#### (1) Contents

| | |
|---|---|
| Trouble type | C8302: Cooling fan trouble (When DF-629 or DF-704 is installed) |
| Rank | B |
| Trouble detection condition | <When DF-629 is installed><br>• The lock signal continues to detect H during a given time while the DF cooling fan motor (FM1) is spinning.<br>• The lock signal continues to detect L during a given time while the DF cooling fan motor (FM1) is during halts. |
| | <When DF-704 is installed><br>• The lock signal continues to detect H during a given time while the DF cooling fan motor (FM1) is spinning.<br>• The lock signal continues to detect L during a given time while the DF cooling fan motor (FM1) is during halts. |
| Trouble isolation | - |
| Relevant electrical parts | <When DF-629 is installed><br>• DF cooling fan motor (FM1)<br>• DF control board (DFCB) |
| | <When DF-704 is installed><br>• DF cooling fan motor (FM1)<br>• DF control board (DFCB) |

#### (2) Procedure

#### (a) When DF-629 is installed

1. Check the connector between FM1-DFCB J16 for proper connection and correct as necessary.
2. Check the fan for possible overload and correct as necessary.
3. FM1 operation check
   - Control signal: DFCB J16-3 (ON)
   - Location of electrical component: DF-629 3-B
4. Replace FM1.
5. Replace DFCB.

NOTICE
- Link to the wiring diagram (N.2.1 DF-629)
- Link to the layout drawings for related parts by each trouble code (S.93.1 DF-629)

#### (b) When DF-704 is installed

1. Check the connector between FM1-DFCB J16 for proper connection and correct as necessary.
2. Check the fan for possible overload and correct as necessary.
3. FM1 operation check
   - Control signal: DFCB J16-3 (ON)
   - Location of electrical component: DF-704 7-G
4. Replace FM1.
5. Replace DFCB.

NOTICE
- Link to the wiring diagram (N.2.2 DF-704)
- Link to the layout drawings for related parts by each trouble code (S.93.2 DF-704)

### 3.12.4 C8401

#### (1) Contents

| | |
|---|---|
| Trouble type | C8401: Data flash failure |
| Rank | C |

| | |
|---|---|
| Trouble detection condition | Data flash does not access normally. |
| Trouble isolation | - |
| Relevant electrical parts | DF control board (DFCB) |

#### (2) Procedure

1. Turn OFF the main power switch, disconnect and then connect the power cord. Wait for 10 sec. or more after connect the power cord, and turn ON the main power switch.
2. Check the DFCB connector for proper connection and correct as necessary.
3. Rewrite the firmware.
4. Replace DFCB. (DF-704/DF-629)

NOTICE
- Link to the layout drawings for related parts by each trouble code (S.94. C8401, CC156)

## 3.13 C9###

### 3.13.1 C9401, C9402

#### (1) Contents

| | |
|---|---|
| Trouble type | • C9401: Exposure LED lighting failure<br>• C9402: Exposure LED lighting abnormally |
| Rank | A |
| Trouble detection condition | • C9401: The output from the CCD sensor is a predetermined value or less during CCD sensor gain adjustment.<br>• C9402: The average output value of the CCD sensor with the scanner at its standby position is a predetermined value or more at the end of a scan job. |
| Trouble isolation | Scanner |
| Relevant electrical parts | • LED exposure unit<br>• Flat cable (LED exposure unit)<br>• CCD board (CCDB)<br>• Scanner drive board (SCDB)<br>• MFP board (MFPB) |

#### (2) Procedure

1. Correct the harness connection between SCDB CN3-LU201 if faulty.
2. Check the connector between SCDB CN2-MFPB CN12E for proper connection and correct as necessary.
3. Check the connector between CCDB CN3-MFPB CN1 for proper connection and correct as necessary.
4. Check the status of the harness between CCDB-MFPB and replace as necessary.
5. Replace the LED exposure unit.
6. Replace CCDB.
7. Replace SCDB.
8. Replace MFPB.

NOTICE
- Link to the layout drawings for related parts by each trouble code (S.95. C9401, C9402)

### 3.13.2 C9403, C9404

#### (1) Contents

| | |
|---|---|
| Trouble type | • C9403: CIS LED lighting failure (When DF-704 is installed)<br>• C9404: CIS LED lighting abnormally (When DF-704 is installed) |
| Rank | A |
| Trouble detection condition | • C9403: At the CIS gain adjustment, the machine detected that the output of the CIS LED is lower than the specified value.<br>• C9404: After a scan job is completed, the machine detected that the average output of the CIS LED is greater than the specified value. |
| Trouble isolation | Scanner |
| Relevant electrical parts | • CIS module (CIS)<br>• CIS power supply (CISPU)<br>• Dual scan image processing board (DSIPB)<br>• MFP board (MFPB)<br>• CIS cable |

#### (2) Procedure

1. Check the back side scanning shading shaft for any stain, and clean up it as necessary.
2. Check that the bearing of the back side glass cleaning roller unit is on the standby position.
3. Correct the harness connection between CIS and DSIPB if faulty.
4. Correct the harness connection between CIS J222-CISPU J2 if faulty.
5. Measure the voltage of CISPU J1-1.
   - Control signal: CISPU J1-1 (DC12V)
   - Location of electrical component: DF-704 5-B
6. Measure the voltage of CIS J222-1, J222-2 and J222-5.
   - Control signal: CIS J222-1 (DC5V), CIS J222-2 (DC5V), CIS J222-5 (DC12V)

- Location of electrical component: DF-704 4-B

7. For any abnormality in the measurement result, replace the CIS cable.
8. Replace CIS.
9. Replace CISPU.
10. Replace DSIPB.
11. Replace MFPB.

NOTICE
- Link to the wiring diagram (N.2.2 DF-704)
- Link to the layout drawings for related parts by each trouble code (S.96. C9403, C9404)

## 3.14 CA###

### 3.14.1 CA051, CA052, CA053

#### (1) Contents

| | |
|---|---|
| Trouble type | • CA051: Standard controller configuration failure<br>• CA052: Controller hardware error<br>• CA053: Controller start failure |
| Rank | C |
| Trouble detection condition | • CA051: The controller of the MFP board (MFPB) is faulty.<br>• CA052: A controller hardware error is detected in the network interface.<br>• CA053: A controller start failure is detected in the controller interface. |
| Trouble isolation | - |
| Relevant electrical parts | MFP board (MFPB) |

#### (2) Procedure

1. Check to see if the following setting has been correctly made: [Service Mode] -> [System 2] -> [Image Controller Setting].
   If changing the setting, turn OFF the main power switch and turn it ON again after 10 seconds or more.
2. Check the connectors of the MFPB for proper connection and correct as necessary.
3. Replace MFPB.

NOTICE
- Link to the layout drawings for related parts by each trouble code (S.68. C4091 - C40A4, C5601, C5605, C5606, CA051 - CA053, CC151, CC152, CC15C, CC170 - CC186, CC191 - CC216, CD211 - CD261, CD401 - CD413, CD701 - CD703, CD705, CD706, CE001, CE003 - CE305, CEEE1, CEEE3)

## 3.15 CC###

### 3.15.1 CC140

#### (1) Contents

| | |
|---|---|
| Trouble type | CC140: Trouble related to security |
| Rank | C |
| Trouble detection condition | - |
| Trouble isolation | - |
| Relevant electrical parts | - |

#### (2) Procedure

**NOTE**
- **Contact the responsible people of KM before taking some countermeasures.**

### 3.15.2 CC151, CC152

#### (1) Contents

| | |
|---|---|
| Trouble type | • CC151: ROM contents error upon startup (MSC)<br>• CC152: ROM contents error upon startup (IR) |
| Rank | C |
| Trouble detection condition | A fault is detected in a sequence of ROM contents check of the MFPB during starting. |
| Trouble isolation | - |
| Relevant electrical parts | MFP board (MFPB) |

#### (2) Procedure

1. Check the ROM version.
2. Rewrite the firmware.
3. Replace MFPB.

NOTICE
- Link to the layout drawings for related parts by each trouble code (S.68. C4091 - C40A4, C5601, C5605, C5606, CA051 - CA053, CC151, CC152, CC15C, CC170 - CC186, CC191 - CC216, CD211 - CD261, CD401 - CD413, CD701 - CD703, CD705, CD706, CE001, CE003 - CE305, CEEE1, CEEE3)

### 3.15.3 CC155

#### (1) Contents

| | |
|---|---|
| Trouble type | CC155: Finisher ROM error (When FS-533, FS-534, FS-534SD or JS-506 is installed) |
| Rank | C |
| Trouble detection condition | Data of flash ROM of the finishing options is determined to be faulty when the main power switch is turned ON. |
| Trouble isolation | - |
| Relevant electrical parts | <When FS-533, FS-534 or FS-534SD is installed><br>• FS control board (FSCB) |
| | <When JS-506 is installed><br>• JS control board (JSCB) |

#### (2) Procedure

##### (a) When FS-533, FS-534 or FS-534SD is installed

1. Turn OFF the main power switch, disconnect and then connect the power cord. Wait for 10 sec. or more after connect the power cord, and turn ON the main power switch.
2. Rewrite the firmware.
3. Replace FSCB. (FS-533/FS-534/FS-534SD)

##### (b) When JS-506 is installed

1. Turn OFF the main power switch, disconnect and then connect the power cord. Wait for 10 sec. or more after connect the power cord, and turn ON the main power switch.
2. Rewrite the firmware.
3. Replace JSCB.

NOTICE
- Link to the layout drawings for related parts by each trouble code (S.14. C1004, CC155, CD704)

### 3.15.4 CC156

#### (1) Contents

| | |
|---|---|
| Trouble type | CC156: DF ROM error (When DF-629 or DF-704 is installed) |
| Rank | C |
| Trouble detection condition | Upgrade of the firmware has not been successful. |
| Trouble isolation | - |
| Relevant electrical parts | DF control board (DFCB) |

#### (2) Procedure

1. Turn OFF the main power switch, disconnect and then connect the power cord. Wait for 10 sec. or more after connect the power cord, and turn ON the main power switch.
2. Rewrite the firmware.
3. Replace DFCB. (DF-629/DF-704)

NOTICE
- Link to the layout drawings for related parts by each trouble code (S.94. C8401, CC156)

### 3.15.5 CC159, CC15A

#### (1) Contents

| | |
|---|---|
| Trouble type | • CC159: ROM contents error upon startup (DSC1)<br>• CC15A: ROM contents error upon startup (DSC2) |
| Rank | C |
| Trouble detection condition | A fault is detected in a sequence of ROM contents check of the DSC board during starting. |
| Trouble isolation | - |
| Relevant electrical parts | • DSC board/1 (DSCB/1; SC-508)<br>• DSC board/2 (DSCB/2; SC-508: only when DF-704 is installed) |

#### (2) Procedure

1. Check DSCB/1 or DSCB/2 connector for proper connection and correct as necessary.
2. Turn OFF the main power switch, disconnect and then connect the power cord. Wait for 10 sec. or more after connect the power cord, and turn ON the main power switch.
3. Rewrite the firmware.
4. Replace DSCB/1 or DSCB/2.

NOTICE
- Link to the layout drawings for related parts by each trouble code (S.97. CC159, CC15A)

### 3.15.6 CC15B

#### (1) Contents

| | |
|---|---|
| Trouble type | CC15B: Flash ROM error (saddle) (When FS-534SD is installed) |
| Rank | C |
| Trouble detection condition | Data of flash ROM of the saddle is determined to be faulty when the main power switch is turned ON. |
| Trouble isolation | - |
| Relevant electrical parts | SD drive board (SDDB) |

#### (2) Procedure

1. Turn OFF the main power switch, disconnect and then connect the power cord. Wait for 10 sec. or more after connect the power cord, and turn ON the main power switch.
2. Rewrite the firmware.
3. Replace SDDB.

NOTICE

- Link to the layout drawings for related parts by each trouble code (S.98. CC15B)

### 3.15.7 CC15C

#### (1) Contents

| | |
|---|---|
| Trouble type | CC15C: Engine Flash ROM writing error |
| Rank | C |
| Trouble detection condition | Data of flash ROM of the engine is determined to be faulty. |
| Trouble isolation | - |
| Relevant electrical parts | MFP board (MFPB) |

#### (2) Procedure

1. Turn OFF the main power switch, disconnect and then connect the power cord. Wait for 10 sec. or more after connect the power cord, and turn ON the main power switch.
2. Rewrite the firmware.
3. Replace MFPB.

NOTICE

- Link to the layout drawings for related parts by each trouble code (S.68. C4091 - C40A4, C5601, C5605, C5606, CA051 - CA053, CC151, CC152, CC15C, CC170 - CC186, CC191 - CC216, CD211 - CD261, CD401 - CD413, CD701 - CD703, CD705, CD706, CE001, CE003 - CE305, CEEE1, CEEE3)

### 3.15.8 CC163

#### (1) Contents

| | |
|---|---|
| Trouble type | CC163: ROM contents error (PRT) |
| Rank | C |
| Trouble detection condition | The wrong model of firmware is detected in the engine during the initial connection to the engine is being checked. |
| Trouble isolation | - |
| Relevant electrical parts | • EEPROM/1<br>• EEPROM/2<br>• MFP board (MFPB) |

#### (2) Procedure

1. Rewrite the firmware.
2. Replace MFPB

   **NOTE**

   - **When taking the above steps, check whether MFPB is defective or not without replacing the EEPROM.**

   1. Turn OFF the main power switch and replace the current MFPB with a new one.
   2. Update the firmware.
   3. After completing the firmware update, turn OFF and ON the main power switch and check to see that warm-up is started.
   4. When the trouble cannot be solved, reinstall the removed MFPB to the original board.
3. If the above actions do not solve the problem, contact KM.

NOTICE

- Link to the layout drawings for related parts by each trouble code (S.56. C2650, CC163)

### 3.15.9 CC164

#### (1) Contents

| | |
|---|---|
| Trouble type | CC164: ROM contents error (MSC) |
| Rank | C |
| Trouble detection condition | • The wrong model of firmware is detected in the MFP board when the main power switch is turned ON. |

| | |
|---|---|
| | • The machine type information (Machine, Type) registered to the machine differs from the actual machine type. |
| Trouble isolation | - |
| Relevant electrical parts | • MFP board (MFPB)<br>• eMMC board (eMMC) |

### (2) Procedure

1. Check the ROM version.
2. Check the machine type information registered and reenter as necessary.
   For details the machine information, see "J.2.4 Entering the machine type information".
3. Rewrite the firmware.
4. Replace MFPB.
5. Replace eMMC.
6. If the above actions do not solve the problem, contact KM.

NOTICE

- Link to the layout drawings for related parts by each trouble code (S.99. CC164, CD3A0)

## 3.15.10 CC170, CC171, CC172, CC173, CC174, CC180, CC181, CC182, CC183, CC184, CC185, CC186

### (1) Contents

| | |
|---|---|
| Trouble type | • CC170: Dynamic link error during starting (AP0)<br>• CC171: Dynamic link error during starting (AP1)<br>• CC172: Dynamic link error during starting (AP2)<br>• CC173: Dynamic link error during starting (AP3)<br>• CC174: Dynamic link error during starting (AP4)<br>• CC180: Dynamic link error during starting (LDR)<br>• CC181: Dynamic link error during starting (IBR)<br>• CC182: Dynamic link error during starting (IID)<br>• CC183: Dynamic link error during starting (IPF)<br>• CC184: Dynamic link error during starting (IMY)<br>• CC185: Dynamic link error during starting (SPF)<br>• CC186: Dynamic link error during starting (OAP) |
| Rank | C |
| Trouble detection condition | A dynamic link error occurs in the program on the MFP board due to an insufficient memory space available, a ROM fault, or other reason when the main power switch is turned ON. |
| Trouble isolation | - |
| Relevant electrical parts | MFP board (MFPB) |

### (2) Procedure

1. If the malfunction code "C-C172" has occurred, access [Service Mode] -> [System 2] -> [Image Controller Setting] and check to see if "Others" is set for the image controller.
   If any of these is set, according to the kind of controller, select "Controller 0" or "Controller 1."
2. If the malfunction code "C-C180" has occurred, check to install the appropriate loadable device driver for an authentication unit which is installed to the MFP.
   When the appropriate loadable device driver is not installed, reinstall the appropriate loadable device driver.
3. Replace MFPB.
4. If the above actions do not solve the problem, contact KM.

NOTICE

- Link to the layout drawings for related parts by each trouble code (S.68. C4091 - C40A4, C5601, C5605, C5606, CA051 - CA053, CC151, CC152, CC15C, CC170 - CC186, CC191 - CC216, CD211 - CD261, CD401 - CD413, CD701 - CD703, CD705, CD706, CE001, CE003 - CE305, CEEE1, CEEE3)

## 3.15.11 CC190

### (1) Contents

| | |
|---|---|
| Trouble type | CC190: Outline font load error |
| Rank | C |
| Trouble detection condition | An error occurred while loading the outline font. |
| Trouble isolation | - |
| Relevant electrical parts | • MFP board (MFPB)<br>• Hard disk (A) (HDD (A))<br>• Hard disk (B) (HDD (B): HD-524) |

### (2) Procedure

1. Check the connector between hard disk (A)-MFPB CN20, CN26 for proper connection and correct as necessary.
2. Check the connector between hard disk (B)-MFPB CN7, CN27 for proper connection and correct as necessary.
3. Format the hard disk.
4. Replace the hard disk. (HDD (A) / HDD (B))
5. Replace MFPB.

NOTICE
- Link to the layout drawings for related parts by each trouble code (S.100. CC190, CD002, CD004, CD00F, CD020, CD050)

### 3.15.12 CC191

#### (1) Contents

| | |
|---|---|
| Trouble type | CC191: Setting parameter load error (LDR) |
| Rank | C |
| Trouble detection condition | Upon startup, the processing of the loadable device driver setting data file failed.<br>• RAM disk file creation failed.<br>• Reading from the flash ROM failed.<br>• An error occurred in API of the authentication module. |
| Trouble isolation | - |
| Relevant electrical parts | MFP board (MFPB) |

#### (2) Procedure

1. Turn OFF the main power switch, wait for 10 sec., then turn the switch ON.
2. Reinstall the loadable device driver.
3. Rewrite the firmware.
4. Replace MFPB.

NOTICE
- Link to the layout drawings for related parts by each trouble code (S.68. C4091 - C40A4, C5601, C5605, C5606, CA051 - CA053, CC151, CC152, CC15C, CC170 - CC186, CC191 - CC216, CD211 - CD261, CD401 - CD413, CD701 - CD703, CD705, CD706, CE001, CE003 - CE305, CEEE1, CEEE3)

### 3.15.13 CC211

#### (1) Contents

| | |
|---|---|
| Trouble type | CC211: Authentication device general error |
| Rank | C |
| Trouble detection condition | When using the authentication device, authentication data is not to meet the specifications. |
| Trouble isolation | - |
| Relevant electrical parts | • MFP board (MFPB)<br>• Authentication device |

#### (2) Procedure

1. Check the USB cable for proper connection. Reconnect the USB cable as necessary.
2. Turn OFF the main power switch, wait for 10 sec. or more, and turn ON the main power switch.

NOTICE
- Link to the layout drawings for related parts by each trouble code (S.68. C4091 - C40A4, C5601, C5605, C5606, CA051 - CA053, CC151, CC152, CC15C, CC170 - CC186, CC191 - CC216, CD211 - CD261, CD401 - CD413, CD701 - CD703, CD705, CD706, CE001, CE003 - CE305, CEEE1, CEEE3)

### 3.15.14 CC212

#### (1) Contents

| | |
|---|---|
| Trouble type | CC212: User validation error |
| Rank | C |
| Trouble detection condition | • An error occurred while validating the user authentication information.<br>• The loadable device driver is not successfully installed. |
| Trouble isolation | - |
| Relevant electrical parts | • MFP board (MFPB)<br>• Authentication device |

#### (2) Procedure

1. When this trouble code is generated after installing the loadable device driver, check to see if there is any file other than loadable device driver in USB memory used.
   If there is any file, reinstall the loadable device driver.
2. Check the USB cable for proper connection.
   Reconnect the USB cable as necessary.
3. Turn OFF the main power switch, wait for 10 sec. or more, and turn ON the main power switch.
4. Re-register the user authentication information.
5. Replace authentication device.

NOTICE
- Link to the layout drawings for related parts by each trouble code (S.68. C4091 - C40A4, C5601, C5605, C5606, CA051 - CA053, CC151, CC152, CC15C, CC170 - CC186, CC191 - CC216, CD211 - CD261, CD401 - CD413, CD701 - CD703, CD705, CD706, CE001, CE003 - CE305, CEEE1, CEEE3)

### 3.15.15 CC213

#### (1) Contents

| | |
|---|---|
| Trouble type | CC213: User registration error/Card information setting error |
| Rank | C |
| Trouble detection condition | • IC card advanced settings data is not correct when starting-up the authentication device.<br>• Authentication information data is not correct when starting-up the authentication device.<br>• IC card advanced settings data is not correct when setting the IC card advanced settings.<br>• Authentication information data is not correct when setting the IC card advanced settings.<br>• IC card advanced settings data is not correct when registering the authentication information.<br>• Authentication information data is not correct when registering the authentication information.<br>• IC card advanced settings data is not correct when editing the authentication information.<br>• Authentication information data is not correct when editing the authentication information. |
| Trouble isolation | - |
| Relevant electrical parts | • MFP board (MFPB)<br>• Authentication device |

#### (2) Procedure

1. Check the USB cable for proper connection.
   Reconnect the USB cable as necessary.
2. Turn OFF the main power switch, wait for 10 sec. or more, and turn ON the main power switch.
3. Reset the authentication settings. (card type, IC card advanced settings, and etc.)
4. Re-register the user authentication information.

NOTICE

- Link to the layout drawings for related parts by each trouble code (S.68. C4091 - C40A4, C5601, C5605, C5606, CA051 - CA053, CC151, CC152, CC15C, CC170 - CC186, CC191 - CC216, CD211 - CD261, CD401 - CD413, CD701 - CD703, CD705, CD706, CE001, CE003 - CE305, CEEE1, CEEE3)

### 3.15.16 CC214

#### (1) Contents

| | |
|---|---|
| Trouble type | CC214: User information deletion error |
| Rank | C |
| Trouble detection condition | The deletion of the user information is uncompleted. |
| Trouble isolation | - |
| Relevant electrical parts | • MFP board (MFPB)<br>• Authentication device |

#### (2) Procedure

1. Check the USB cable for proper connection.
   Reconnect the USB cable as necessary.
2. Turn OFF the main power switch, wait for 10 sec. or more, and turn ON the main power switch.

NOTICE

- Link to the layout drawings for related parts by each trouble code (S.68. C4091 - C40A4, C5601, C5605, C5606, CA051 - CA053, CC151, CC152, CC15C, CC170 - CC186, CC191 - CC216, CD211 - CD261, CD401 - CD413, CD701 - CD703, CD705, CD706, CE001, CE003 - CE305, CEEE1, CEEE3)

### 3.15.17 CC216

#### (1) Contents

| | |
|---|---|
| Trouble type | CC216: Acquisition failure of the number of trials/Initialize error of number of authentication |
| Rank | C |
| Trouble detection condition | An error occurred during user authentication using optional authentication unit AU-102. |
| Trouble isolation | - |
| Relevant electrical parts | • MFP board (MFPB)<br>• Authentication device |

#### (2) Procedure

1. Check the USB cable for proper connection.
   Reconnect the USB cable as necessary.
2. Turn OFF the main power switch, wait for 10 sec. or more, and turn ON the main power switch.
3. Reset the number of authentication trials.

NOTICE

- Link to the layout drawings for related parts by each trouble code (S.68. C4091 - C40A4, C5601, C5605, C5606, CA051 - CA053, CC151, CC152, CC15C, CC170 - CC186, CC191 - CC216, CD211 - CD261, CD401 - CD413, CD701 - CD703, CD705, CD706, CE001, CE003 - CE305, CEEE1, CEEE3)

## 3.16 CD###

### 3.16.1 CD002

#### (1) Contents

| | |
|---|---|
| Trouble type | CD002: JOB RAM save error |
| Rank | C |
| Trouble detection condition | The error in save of job data to the memory/ hard disk and its read error are detected. |
| Trouble isolation | - |
| Relevant electrical parts | • MFP board (MFPB)<br>• Hard disk (A) (HDD (A))<br>• Hard disk (B) (HDD (B): HD-524) |

#### (2) Procedure

1. Check the connector between hard disk (A)-MFPB CN20, CN26 for proper connection and correct as necessary.
2. Check the connector between hard disk (B)-MFPB CN7, CN27 for proper connection and correct as necessary.
3. Format the hard disk.
4. Replace the hard disk. (HDD (A) / HDD (B))
5. Replace MFPB.

NOTICE
- Link to the layout drawings for related parts by each trouble code (S.100. CC190, CD002, CD004, CD00F, CD020, CD050)

### 3.16.2 CD004, CD00F, CD020

#### (1) Contents

| | |
|---|---|
| Trouble type | • CD004: Hard disk access error (connection failure)<br>• CD00F: Hard disk data transfer error<br>• CD020: Hard disk verify error |
| Rank | C |
| Trouble detection condition | • CD004: Unable to communicate between the hard disk and MFP board (MFPB).<br>• CD00F: Data transfer from the hard disk is faulty.<br>• CD020: The data abnormality is detected by the hard disk verify check. |
| Trouble isolation | - |
| Relevant electrical parts | • MFP board (MFPB)<br>• Hard disk (A) (HDD (A))<br>• Hard disk (B) (HDD (B): HD-524) |

#### (2) Procedure

1. Check the connector between hard disk (A)-MFPB CN20, CN26 for proper connection and correct as necessary.
2. Check the connector between hard disk (B)-MFPB CN7, CN27 for proper connection and correct as necessary.
3. Reinstall the hard disk.
4. Replace the hard disk. (HDD (A) / HDD (B))
5. Replace MFPB.

NOTICE
- Link to the layout drawings for related parts by each trouble code (S.100. CC190, CD002, CD004, CD00F, CD020, CD050)

### 3.16.3 CD010

#### (1) Contents

| | |
|---|---|
| Trouble type | CD010: Hard disk unformat |
| Rank | C |
| Trouble detection condition | Unformatted hard disk is connected. |
| Trouble isolation | - |
| Relevant electrical parts | • MFP board (MFPB)<br>• Hard disk (A) (HDD (A))<br>• Hard disk (B) (HDD (B): HD-524) |

#### (2) Procedure

1. Format the hard disk.
2. Replace the hard disk. (HDD (A) / HDD (B))
3. Replace MFPB.

NOTICE
- Link to the layout drawings for related parts by each trouble code (S.101. CD010, CE002)

### 3.16.4 CD011

#### (1) Contents

| | |
|---|---|
| Trouble type | CD011: Hard disk out of specifications mounted |
| Rank | C |

| | |
|---|---|
| Trouble detection condition | A hard disk that falls outside the specifications is connected. |
| Trouble isolation | - |
| Relevant electrical parts | • Hard disk (A) (HDD (A))<br>• Hard disk (B) (HDD (B): HD-524) |

#### (2) Procedure

1. Check the hard disk specifications.
2. Replace the hard disk. (HDD (A) / HDD (B))

NOTICE

- Link to the layout drawings for related parts by each trouble code (S.102. CD011, CD012, CD013, CD014, CD015, CD016, CD017, CD030, CD041, CD042, CD043, CD044, CD045, CD046, CD047, CD048, CD049, CD04A, CD04B)

### 3.16.5 CD012

#### (1) Contents

| | |
|---|---|
| Trouble type | CD012: Mount error due to hard disk being unformatted |
| Rank | C |
| Trouble detection condition | • The hard disk is not logically formatted after the whole data in the hard disk has been deleted by overwriting.<br>• The hard disk that has replaced an old one is not logically formatted. |
| Trouble isolation | - |
| Relevant electrical parts | • Hard disk (A) (HDD (A))<br>• Hard disk (B) (HDD (B): HD-524) |

#### (2) Procedure

1. Logically format the hard disk and then upgrade the firmware.
2. Replace the hard disk. (HDD (A) / HDD (B))

NOTICE

- Link to the layout drawings for related parts by each trouble code (S.102. CD011, CD012, CD013, CD014, CD015, CD016, CD017, CD030, CD041, CD042, CD043, CD044, CD045, CD046, CD047, CD048, CD049, CD04A, CD04B)

### 3.16.6 CD013, CD014

#### (1) Contents

| | |
|---|---|
| Trouble type | CD013: HDD mirroring error master<br>CD014: HDD mirroring error slave |
| Rank | A |
| Trouble detection condition | CD013: A R/W error occurs in the master drive during mirroring.<br>CD014: A R/W error occurs in the slave drive during mirroring. |
| Trouble isolation | - |
| Relevant electrical parts | • Hard disk (A) (HDD (A))<br>• Hard disk (B) (HDD (B): HD-524) |

#### (2) Procedure

1. Turn OFF the main power switch, wait for 10 sec., then turn the switch ON.
2. Select [Service Mode] -> [State Confirmation] -> [Memory/Storage Status] and identify the specific hard disk that has developed the error. If an error occurs, "Error" appears in the status column.
3. Replace the hard disk that has developed the error with a new one. (HDD (A) / HDD (B))
4. Select [Service Mode] -> [State Confirmation] -> [Memory/Storage Adjustment] -> [HDD Mirroring Rebuild] and perform the function.

NOTICE

- Link to the layout drawings for related parts by each trouble code (S.102. CD011, CD012, CD013, CD014, CD015, CD016, CD017, CD030, CD041, CD042, CD043, CD044, CD045, CD046, CD047, CD048, CD049, CD04A, CD04B)

### 3.16.7 CD015

#### (1) Contents

| | |
|---|---|
| Trouble type | CD015: HDD mirroring error master slave |
| Rank | A |
| Trouble detection condition | A R/W error occurs in both drives during mirroring. |
| Trouble isolation | - |
| Relevant electrical parts | • Hard disk (A) (HDD (A))<br>• Hard disk (B) (HDD (B): HD-524) |

#### (2) Procedure

1. Turn OFF the main power switch, wait for 10 sec., then turn the switch ON.
2. Replace both hard disk (A) and hard disk (B) with new ones.
3. Select [Service Mode] -> [State Confirmation] -> [Memory/Storage Adjustment] -> [Format] and perform physical format.
4. Select [Service Mode] -> [State Confirmation] -> [Memory/Storage Adjustment] -> [Format] and perform logical format.

5. If HDD Data Backup has previously been performed, select [Service Mode] -> [Enhanced Security] -> [HDD Data Backup] -> [Restore] and perform the function.
6. If HDD Data Backup has not been performed previously, install voice data, etc.

NOTICE
- Link to the layout drawings for related parts by each trouble code (S.102. CD011, CD012, CD013, CD014, CD015, CD016, CD017, CD030, CD041, CD042, CD043, CD044, CD045, CD046, CD047, CD048, CD049, CD04A, CD04B)

### 3.16.8 CD016

#### (1) Contents

| | |
|---|---|
| Trouble type | CD016: HDD mirroring error master (rebuild) |
| Rank | A |
| Trouble detection condition | A R/W error occurs in the master drive during HDD Mirroring Rebuild. |
| Trouble isolation | - |
| Relevant electrical parts | • Hard disk (A) (HDD (A))<br>• Hard disk (B) (HDD (B): HD-524) |

#### (2) Procedure

1. Turn OFF the main power switch, wait for 10 sec., then turn the switch ON.
   If no problems are encountered, HDD Mirroring Rebuild is automatically performed.
2. Select [Service Mode] -> [State Confirmation] -> [Memory/Storage Status] and identify the specific hard disk that has developed the error.
   If an error occurs, "Error" appears in the status column.
3. Replace the hard disk that has developed the error with a new one. (HDD (A) / HDD (B))
4. Select [Service Mode] -> [State Confirmation] -> [Memory/Storage Adjustment] -> [Format] and perform physical format.
5. Select [Service Mode] -> [State Confirmation] -> [Memory/Storage Adjustment] -> [Format] and perform logical format.
6. If HDD Data Backup has previously been performed, select [Service Mode] -> [Enhanced Security] -> [HDD Data Backup] -> [Restore] and perform the function.
7. If HDD Data Backup has not been performed previously, install voice data, etc.

NOTICE
- Link to the layout drawings for related parts by each trouble code (S.102. CD011, CD012, CD013, CD014, CD015, CD016, CD017, CD030, CD041, CD042, CD043, CD044, CD045, CD046, CD047, CD048, CD049, CD04A, CD04B)

### 3.16.9 CD017

#### (1) Contents

| | |
|---|---|
| Trouble type | CD017: HDD mirroring error slave (rebuild) |
| Rank | A |
| Trouble detection condition | A R/W error occurs in the slave drive during HDD Mirroring Rebuild. |
| Trouble isolation | - |
| Relevant electrical parts | • Hard disk (A) (HDD (A))<br>• Hard disk (B) (HDD (B): HD-524) |

#### (2) Procedure

1. Turn OFF the main power switch, wait for 10 sec., then turn the switch ON.
   If no problems are encountered, HDD Mirroring Rebuild is automatically performed.
2. Select [Service Mode] -> [State Confirmation] -> [Memory/Storage Status] and identify the specific hard disk that has developed the error.
   If an error occurs, "Error" appears in the status column.
3. Replace the hard disk that has developed the error with a new one. (HDD (A) / HDD (B))
4. Select [Service Mode] -> [State Confirmation] -> [Memory/Storage Adjustment] -> [HDD Mirroring Rebuild] and perform the function.

NOTICE
- Link to the layout drawings for related parts by each trouble code (S.102. CD011, CD012, CD013, CD014, CD015, CD016, CD017, CD030, CD041, CD042, CD043, CD044, CD045, CD046, CD047, CD048, CD049, CD04A, CD04B)

### 3.16.10 CD030

#### (1) Contents

| | |
|---|---|
| Trouble type | CD030: Hard disk management information reading error |
| Rank | C |
| Trouble detection condition | The machine fails to read administrative information data saved in the hard disk. |
| Trouble isolation | - |
| Relevant electrical parts | • Hard disk (A) (HDD (A))<br>• Hard disk (B) (HDD (B): HD-524) |

NOTICE
- Link to the layout drawings for related parts by each trouble code (S.102. CD011, CD012, CD013, CD014, CD015, CD016, CD017, CD030, CD041, CD042, CD043, CD044, CD045, CD046, CD047, CD048, CD049, CD04A, CD04B)

### 3.16.11 CD041, CD042, CD043, CD044, CD045, CD046

#### (1) Contents

| | |
|---|---|
| Trouble type | CD041, CD042, CD043, CD044, CD045, CD046: HDD command execution error |
| Rank | C |
| Trouble detection condition | The error occurred inside the hard disk. |
| Trouble isolation | - |
| Relevant electrical parts | • Hard disk (A) (HDD (A))<br>• Hard disk (B) (HDD (B): HD-524) |

#### (2) Procedure

1. Check the hard disk specifications.
2. Format the hard disk.
3. Replace the hard disk. (HDD (A) / HDD (B))

NOTICE

- Link to the layout drawings for related parts by each trouble code (S.102. CD011, CD012, CD013, CD014, CD015, CD016, CD017, CD030, CD041, CD042, CD043, CD044, CD045, CD046, CD047, CD048, CD049, CD04A, CD04B)

### 3.16.12 CD047, CD048, CD049, CD04A, CD04B

#### (1) Contents

| | |
|---|---|
| Trouble type | CD047, CD048, CD049, CD04A, CD04B: HDD SCSI library error |
| Rank | C |
| Trouble detection condition | The error occurred inside the hard disk. |
| Trouble isolation | - |
| Relevant electrical parts | • Hard disk (A) (HDD (A))<br>• Hard disk (B) (HDD (B): HD-524) |

#### (2) Procedure

1. Check the hard disk specifications.
2. Format the hard disk.
3. Replace the hard disk. (HDD (A) / HDD (B))

NOTICE

- Link to the layout drawings for related parts by each trouble code (S.102. CD011, CD012, CD013, CD014, CD015, CD016, CD017, CD030, CD041, CD042, CD043, CD044, CD045, CD046, CD047, CD048, CD049, CD04A, CD04B)

### 3.16.13 CD050

#### (1) Contents

| | |
|---|---|
| Trouble type | CD050: Hard disk recovery timeout |
| Rank | C |
| Trouble detection condition | The hard disk fails to recover from the power save mode within the predetermined period of time. |
| Trouble isolation | - |
| Relevant electrical parts | • MFP board (MFPB)<br>• Hard disk (A) (HDD (A))<br>• Hard disk (B) (HDD (B): HD-524) |

#### (2) Procedure

1. Check the connector between hard disk (A)-MFPB CN20, CN26 for proper connection and correct as necessary.
2. Check the connector between hard disk (B)-MFPB CN7, CN27 for proper connection and correct as necessary.
3. Reinstall the hard disk.
4. Format the hard disk.
5. Replace the hard disk. (HDD (A) / HDD (B))

NOTICE

- Link to the layout drawings for related parts by each trouble code (S.100. CC190, CD002, CD004, CD00F, CD020, CD050)

### 3.16.14 CD110

#### (1) Contents

| | |
|---|---|
| Trouble type | CD110: Wireless LAN destination initialization error |
| Rank | C |
| Trouble detection condition | When an initialization error occurred on the settings of the wireless LAN in the upgrade kit (UK-212). |
| Trouble isolation | - |
| Relevant electrical parts | - |

### (2) Procedure

1. Check the UK-212 connector for proper connection and correct as necessary.
2. Rewrite the firmware.
3. Reinstall the UK-212.

## 3.16.15 CD201, CD202, CD203

### (1) Contents

| | |
|---|---|
| Trouble type | • CD201: File memory mounting error<br>• CD202: Memory capacity discrepancy<br>• CD203: Memory capacity discrepancy 2 |
| Rank | C |
| Trouble detection condition | CD201:<br>• The file memory is not mounted.<br>• The file has any abnormality. |
| | CD202:<br>• File memory capacity on the MFP board (MFPB) is not enough.<br>• File memory capacity necessary for duplex printing is not enough. |
| | CD203: File memory capacity on the MFP board (MFPB) is not enough. |
| Trouble isolation | - |
| Relevant electrical parts | • MFP board (MFPB)<br>• Memory board (MEMB; UK-211) |

### (2) Procedure

1. Check to see if MEMB on MFPB is installed correctly.
2. Replace MEMB on MFPB.
3. Replace MFPB.

NOTICE

- Link to the layout drawings for related parts by each trouble code (S.103. CD201, CD202, CD203, CD271)

## 3.16.16 CD211, CD212

### (1) Contents

| | |
|---|---|
| Trouble type | • CD211: PCI-SDRAM DMA operation failure<br>• CD212: Compression/extraction timeout detection |
| Rank | C |
| Trouble detection condition | • CD211: Hardware related to the transfer of memory image of the MFP board (MFPB) fails to respond.<br>• CD212: Hardware related to the BTC compression function of the MFP board (MFPB) fails to respond. |
| Trouble isolation | - |
| Relevant electrical parts | MFP board (MFPB) |

### (2) Procedure

1. Replace MFPB.

NOTICE

- Link to the layout drawings for related parts by each trouble code (S.68. C4091 - C40A4, C5601, C5605, C5606, CA051 - CA053, CC151, CC152, CC15C, CC170 - CC186, CC191 - CC216, CD211 - CD261, CD401 - CD413, CD701 - CD703, CD705, CD706, CE001, CE003 - CE305, CEEE1, CEEE3)

## 3.16.17 CD241, CD242

### (1) Contents

| | |
|---|---|
| Trouble type | CD241: Encryption ASIC setting error<br>CD242: Encryption ASIC mounting error |
| Rank | C |
| Trouble detection condition | CD241: Initialization error of the encrypted ASIC is detected during the machine is starting.<br>CD242: The faulty of the installation of encrypted ASIC is detected during the machine is starting. |
| Trouble isolation | - |
| Relevant electrical parts | MFP board (MFPB) |

### (2) Procedure

1. Check the MFP board connector for proper connection and correct as necessary.
2. Replace MFPB

NOTICE

- Link to the layout drawings for related parts by each trouble code (S.68. C4091 - C40A4, C5601, C5605, C5606, CA051 - CA053, CC151, CC152, CC15C, CC170 - CC186, CC191 - CC216, CD211 - CD261, CD401 - CD413, CD701 - CD703, CD705, CD706, CE001, CE003 - CE305, CEEE1, CEEE3)

### 3.16.18 CD252

#### (1) Contents

| | |
|---|---|
| Trouble type | CD252: No relay circuit boards for IC-416 mounting at IC-416 mount setting |
| Rank | C |
| Trouble detection condition | EFI relay circuit boards (VI-508) are not mounted when the IC-416 is set to mount setting at Service Mode. |
| Trouble isolation | - |
| Relevant electrical parts | • MFP board (MFPB)<br>• EFI relay board (VI-508) |

#### (2) Procedure

1. If the IC-416 is not mounted, access [Service Mode] -> [System 2] -> [Image Controller Setting] and check to see if “Controller 0” is set for the image controller.
2. Check the EFI relay board (VI-508) connector for proper connection and correct as necessary.
3. Replace EFI relay board (VI-508).
4. Replace MFPB.

NOTICE

- Link to the layout drawings for related parts by each trouble code (S.68. C4091 - C40A4, C5601, C5605, C5606, CA051 - CA053, CC151, CC152, CC15C, CC170 - CC186, CC191 - CC216, CD211 - CD261, CD401 - CD413, CD701 - CD703, CD705, CD706, CE001, CE003 - CE305, CEEE1, CEEE3)

### 3.16.19 CD261

#### (1) Contents

| | |
|---|---|
| Trouble type | CD261: USB host board failure |
| Rank | C |
| Trouble detection condition | • When a failure is detected in USB host board included in the local interface kit.<br>• Non-standard USB device is connected. |
| Trouble isolation | - |
| Relevant electrical parts | • MFP board (MFPB)<br>• USB host board (EK-608)<br>• USB host board (EK-609) |

#### (2) Procedure

1. Check the operation with another USB device.
2. Check the USB host board connector for proper connection and correct as necessary.
3. Replace the USB host board.
4. Replace MFPB.

NOTICE

- Link to the layout drawings for related parts by each trouble code (S.68. C4091 - C40A4, C5601, C5605, C5606, CA051 - CA053, CC151, CC152, CC15C, CC170 - CC186, CC191 - CC216, CD211 - CD261, CD401 - CD413, CD701 - CD703, CD705, CD706, CE001, CE003 - CE305, CEEE1, CEEE3)

### 3.16.20 CD262

#### (1) Contents

| | |
|---|---|
| Trouble type | CD262: Extension network adapter installation error |
| Rank | C |
| Trouble detection condition | • When the 2nd network card settings is set to “Set” but the upgrade kit (UK-212) is not installed.<br>• Upgrade Kit (UK-212) is faulty. |
| Trouble isolation | - |
| Relevant electrical parts | - |

#### (2) Procedure

1. Check the settings of [Service Mode] -> [Network Settings] -> [2nd Network Setting] -> [2nd network card settings].
2. Check the UK-212 connector for proper connection and correct as necessary.
3. Rewrite the firmware.
4. Reinstall the UK-212.

### 3.16.21 CD271

#### (1) Contents

| | |
|---|---|
| Trouble type | CD271: i-Option activated and additional memory not installed |
| Rank | C |
| Trouble detection condition | While the i-Option is activated, the additional memory included in UK-211 is not installed. |
| Trouble isolation | - |
| Relevant electrical parts | • MFP board (MFPB) |

| | |
|---|---|
| | • Memory board (MEMB; UK-211) |

#### (2) Procedure

1. Check MEMB for proper connection and correct as necessary.
2. Replace MEMB.
3. Replace MFPB.

NOTICE
- Link to the layout drawings for related parts by each trouble code (S.103. CD201, CD202, CD203, CD271)

### 3.16.22 CD272

#### (1) Contents

| | |
|---|---|
| Trouble type | CD272: i-Option activated and additional memory and HDD not installed |
| Rank | C |
| Trouble detection condition | While the i-Option is activated, the additional memory included in UK-211 and the HDD are not installed. |
| Trouble isolation | - |
| Relevant electrical parts | • MFP board (MFPB)<br>• Hard disk (A) (HDD (A))<br>• Memory board (MEMB; UK-211) |

#### (2) Procedure

1. Check MEMB for proper connection and correct as necessary.
2. Access [Service Mode] -> [System 2] -> [HDD] and check to see if “Installed” is selected.
3. Replace MEMB.
4. Replace the hard disk (A).
5. Replace MFPB.

NOTICE
- Link to the layout drawings for related parts by each trouble code (S.104. CD272)

### 3.16.23 CD390

#### (1) Contents

| | |
|---|---|
| Trouble type | CD390: Nonvolatile data checksum error |
| Rank | C |
| Trouble detection condition | C-D390 code is normally shown when the MFP board is replaced with a new one. |
| Trouble isolation | - |
| Relevant electrical parts | - |

#### (2) Procedure

1. Wait until “Recover Data” appears. (MFP will reboot maximum 2 times by itself, it may take 5 minutes.) Touch the “Recover Data” button and follow the instructions that appear on the control panel to restore (backup) data.

### 3.16.24 CD391

#### (1) Contents

| | |
|---|---|
| Trouble type | CD391: Nonvolatile data save error (eMMC) |
| Rank | - |
| Trouble detection condition | - |
| Trouble isolation | - |
| Relevant electrical parts | - |

#### (2) Procedure

**NOTE**
- **Contact the responsible people of KM before taking some countermeasures.**

### 3.16.25 CD392

#### (1) Contents

| | |
|---|---|
| Trouble type | CD392: Nonvolatile data save error (EEPROM) |
| Rank | C |
| Trouble detection condition | The EEPROM is replaced with a new one. |
| Trouble isolation | - |

| | |
|---|---|
| Relevant electrical parts | • EEPROM/1<br>• EEPROM/2 |

#### (2) Procedure

1. Replace the following components with new ones.
   When the transfer belt unit and the fusing unit have been replaced with new ones, perform [New Release] in the service mode. When the transfer roller has been replaced with a new one, perform [Counter clear].
   - Developing unit/Y,M,C,K
   - Drum unit/Y,M,C,K
   - Toner cartridge/Y,M,C,K
   - Transfer belt unit
   - Fusing unit
   - Transfer roller
   - Feed roller, pick-up roller, separation roller (including options)
2. Turn OFF the main power switch, disconnect and then connect the power cord. Wait for 10 sec. or more after connect the power cord, and turn ON the main power switch.
3. Set the various setting values in the service mode again.

NOTICE
- Link to the layout drawings for related parts by each trouble code (S.105. CD392)

### 3.16.26 CD3A0

#### (1) Contents

| | |
|---|---|
| Trouble type | CD3A0: Counter error |
| Rank | C |
| Trouble detection condition | The total counter values provided by the MFP board and the eMMC board are different. |
| Trouble isolation | - |
| Relevant electrical parts | • MFP board (MFPB)<br>• eMMC board (eMMC) |

#### (2) Procedure

1. If this error occurs temporarily due to the use of the board removed from another machine, reinstall the original board.
2. Replace the current MFPB with a new one.
3. Replace the current eMMC with a new one.

NOTICE
- Link to the layout drawings for related parts by each trouble code (S.99. CC164, CD3A0)

### 3.16.27 CD401, CD402, CD403, CD404, CD405, CD406, CD407, CD411, CD412, CD413

#### (1) Contents

| | |
|---|---|
| Trouble type | • CD401: NACK command incorrect<br>• CD402: ACK command incorrect<br>• CD403: Checksum error<br>• CD404: Receiving packet incorrect<br>• CD405: Receiving packet analysis error<br>• CD406: ACK receiving timeout<br>• CD407: Retransmission timeout<br>• CD411: Touch panel board error<br>• CD412: Touch panel type mismatch<br>• CD413: Electrostatic touch panel operation mode error |
| Rank | C |
| Trouble detection condition | When abnormality is found in the communication of controller. |
| Trouble isolation | - |
| Relevant electrical parts | MFP board (MFPB) |

#### (2) Procedure

1. Check whether there is a strong electromagnetic noise source near the main body.
2. Check the connectors on MFPB for proper connection and correct as necessary.
3. Replace MFPB.

NOTICE
- Link to the layout drawings for related parts by each trouble code (S.68. C4091 - C40A4, C5601, C5605, C5606, CA051 - CA053, CC151, CC152, CC15C, CC170 - CC186, CC191 - CC216, CD211 - CD261, CD401 - CD413, CD701 - CD703, CD705, CD706, CE001, CE003 - CE305, CEEE1, CEEE3)

### 3.16.28 CD601, CD602, CD603

#### (1) Contents

| | |
|---|---|
| Trouble type | CD601, CD602, CD603: Trouble related to security |
| Rank | - |

| | |
|---|---|
| Trouble detection condition | - |
| Trouble isolation | - |

#### (2) Procedure

1. Turn OFF the main power switch, wait for 10 sec. or more, and turn ON the main power switch. If the above actions do not solve the problem, contact KM.

### 3.16.29 CD701, CD702, CD703

#### (1) Contents

| | |
|---|---|
| Trouble type | • CD701: Mechanical controller flash ROM writing error<br>• CD702: Mechanical controller flash ROM device error<br>• CD703: FW download communication fault |
| Rank | C |
| Trouble detection condition | CD701: A mechanical controller flash ROM writing sequence is interrupted in its mid-operation due to, for example, power being shut off. |
| | CD702: An erase error or other device fault occurs during mechanical controller flash ROM writing. |
| | CD703:<br>Irregular data is received during FW downloading.<br>• Places are changed in the order of write completion pulses.<br>• A write completion pulse is received for a memory for which binary writing is not permitted.<br>• Final checksum mismatch in FW download<br>• Two-minute timeout (no response from CTL, the number of transfer data items less than the specified) |
| Trouble isolation | - |
| Relevant electrical parts | MFP board (MFPB) |

#### (2) Procedure

1. Turn OFF the main power switch, disconnect and then connect the power cord. Wait for 10 sec. or more after connect the power cord, and turn ON the main power switch.
2. Rewrite the firmware.
3. Replace MFPB.

NOTICE

- Link to the layout drawings for related parts by each trouble code (S.68. C4091 - C40A4, C5601, C5605, C5606, CA051 - CA053, CC151, CC152, CC15C, CC170 - CC186, CC191 - CC216, CD211 - CD261, CD401 - CD413, CD701 - CD703, CD705, CD706, CE001, CE003 - CE305, CEEE1, CEEE3)

### 3.16.30 CD704

#### (1) Contents

| | |
|---|---|
| Trouble type | CD704: Finisher Flash ROM device error (When FS-533, FS-534, FS-534SD or JS-506 is installed) |
| Rank | C |
| Trouble detection condition | An erase error or other device fault occurs during the finisher flash ROM writing. |
| Trouble isolation | - |
| Relevant electrical parts | <When FS-533, FS-534 or FS-534SD is installed><br>• FS control board (FSCB) |
| | <When JS-506 is installed><br>• JS control board (JSCB) |

#### (2) Procedure

##### (a) When FS-533, FS-534 or FS-534SD is installed

1. Turn OFF the main power switch, disconnect and then connect the power cord. Wait for 10 sec. or more after connect the power cord, and turn ON the main power switch.
2. Rewrite the firmware.
3. Replace FSCB. (FS-533/FS-534/FS-534SD)

##### (b) When JS-506 is installed

1. Turn OFF the main power switch, disconnect and then connect the power cord. Wait for 10 sec. or more after connect the power cord, and turn ON the main power switch.
2. Rewrite the firmware.
3. Replace JSCB.

NOTICE

- Link to the layout drawings for related parts by each trouble code (S.14. C1004, CC155, CD704)

### 3.16.31 CD705, CD706

#### (1) Contents

| | |
|---|---|
| Trouble type | • CD705: Mechanical controller sub-CPU flash ROM device error |

| | |
|---|---|
| | • CD706: Mechanical controller sub-CPU flash ROM error |
| Rank | C |
| Trouble detection condition | • CD705: An erase error or other device fault occurs during mechanical controller sub-CPU flash ROM writing.<br>• CD706: A data error is determined to exist in the mechanical controller sub-CPU flash ROM during starting. |
| Trouble isolation | - |
| Relevant electrical parts | MFP board (MFPB) |

#### (2) Procedure

1. Turn OFF the main power switch, disconnect and then connect the power cord. Wait for 10 sec. or more after connect the power cord, and turn ON the main power switch.
2. Rewrite the firmware.
3. Replace MFPB.

NOTICE

- Link to the layout drawings for related parts by each trouble code (S.68. C4091 - C40A4, C5601, C5605, C5606, CA051 - CA053, CC151, CC152, CC15C, CC170 - CC186, CC191 - CC216, CD211 - CD261, CD401 - CD413, CD701 - CD703, CD705, CD706, CE001, CE003 - CE305, CEEE1, CEEE3)

### 3.16.32 CDC##

#### (1) Contents

| | |
|---|---|
| Trouble type | CDC##: Trouble related to security |
| Rank | - |
| Trouble detection condition | - |
| Trouble isolation | - |

#### (2) Procedure

**NOTE**

- **Contact the responsible people of KM before taking some countermeasures.**

### 3.16.33 CDF50, CDF70, CDFA0

#### (1) Contents

| | |
|---|---|
| Trouble type | • CDF50: ASIC image version failure<br>• CDF70: ASIC image access failure<br>• CDFA0: ASIC image error |
| Rank | C |
| Trouble detection condition | Communication error is detected between the MFP board (MFPB) and the CCD board (CCDB). |
| Trouble isolation | - |
| Relevant electrical parts | • MFP board (MFPB)<br>• CCD board (CCDB) |

#### (2) Procedure

1. Check the connector between MFPB CN1-CCDB CN3 for proper connection and correct as necessary.
2. Rewrite the firmware.
3. Replace CCDB.
4. Replace MFPB.

NOTICE

- Link to the layout drawings for related parts by each trouble code (S.83. C6704, C6751, CDF50, CDF70, CDFA0)

### 3.16.34 CDF51, CDF71, CDFA1

#### (1) Contents

| | |
|---|---|
| Trouble type | CDF51: ASIC image version failure (back side) (When DF-704 is installed)<br>CDF71: ASIC image access failure (back side) (When DF-704 is installed)<br>CDFA1: ASIC image error (back side) (When DF-704 is installed) |
| Rank | C |
| Trouble detection condition | Communication error is detected between the MFP board (MFPB) and the dual scan image processing board (DSIPB). |
| Trouble isolation | - |
| Relevant electrical parts | • MFP board (MFPB)<br>• Dual scan image processing board (DSIPB; DF-704) |

#### (2) Procedure

1. Check the connector between MFPB CN22-DSIPB CN01 for proper connection and correct as necessary.
2. Rewrite the firmware.
3. Replace DSIPB.
4. Replace MFPB.

NOTICE
- Link to the layout drawings for related parts by each trouble code (S.106. CDF51, CDF71, CDFA1)

## 3.17 CE###

### 3.17.1 CE001, CE003, CE004, CE005, CE006, CE007

#### (1) Contents

| | |
|---|---|
| Trouble type | • CE001: Abnormal message queue<br>• CE003: Task error<br>• CE004: Event error<br>• CE005: Memory access error<br>• CE006: Header access error<br>• CE007: DIMM initialize error |
| Rank | C |
| Trouble detection condition | MFP board (MFPB) is faulty. |
| Trouble isolation | - |
| Relevant electrical parts | MFP board (MFPB) |

#### (2) Procedure

1. Check the connectors on MFPB for proper connection and correct as necessary.
2. Replace MFPB.

NOTICE
- Link to the layout drawings for related parts by each trouble code (S.68. C4091 - C40A4, C5601, C5605, C5606, CA051 - CA053, CC151, CC152, CC15C, CC170 - CC186, CC191 - CC216, CD211 - CD261, CD401 - CD413, CD701 - CD703, CD705, CD706, CE001, CE003 - CE305, CEEE1, CEEE3)

### 3.17.2 CE002

#### (1) Contents

| | |
|---|---|
| Trouble type | CE002: Message and method parameter failure |
| Rank | C |
| Trouble detection condition | MFP board (MFPB) is faulty. |
| Trouble isolation | - |
| Relevant electrical parts | • MFP board (MFPB)<br>• Hard disk (A) (HDD (A))<br>• Hard disk (B) (HDD (B): HD-524) |

#### (2) Procedure

1. Turn OFF the main power switch and turn it ON again, and conduct the following setting. [Service Mode] -> [System 1] -> [Initialization] -> [Clear All Data].
2. Format the hard disk.
3. Replace the hard disk. (HDD (A) / HDD (B))
4. Replace MFPB.

NOTICE
- Link to the layout drawings for related parts by each trouble code (S.101. CD010, CE002)

### 3.17.3 CE101

#### (1) Contents

| | |
|---|---|
| Trouble type | CE101: Browser finish detected |
| Rank | C |
| Trouble detection condition | • The browser is automatically recovered (restarted) after the main body detected that the browser (separate process) has stopped with fault.<br>• When the “Malfunction finish is detected over predetermined number of times” or “the browser task process is except in idle (printing, etc)”. |
| Trouble isolation | - |
| Relevant electrical parts | MFP board (MFPB) |

#### (2) Procedure

1. Check the connectors on MFPB for proper connection and correct as necessary.
2. Replace MFPB.

NOTICE
- Link to the layout drawings for related parts by each trouble code (S.68. C4091 - C40A4, C5601, C5605, C5606, CA051 - CA053, CC151, CC152, CC15C, CC170 - CC186, CC191 - CC216, CD211 - CD261, CD401 - CD413, CD701 - CD703, CD705, CD706, CE001, CE003 - CE305, CEEE1, CEEE3)

### 3.17.4 CE201

#### (1) Contents

| | |
|---|---|
| Trouble type | CE201: Transmission operation log storage fault |
| Rank | C |
| Trouble detection condition | When the transmission log storage failed, it repeats retrial until transmission operation log is stored.<br>The trouble is detected when the retrial failed for predetermined number of times. |
| Trouble isolation | - |
| Relevant electrical parts | MFP board (MFPB) |

#### (2) Procedure

1. Check the connectors on MFPB for proper connection and correct as necessary.
2. Replace MFPB.

NOTICE

- Link to the layout drawings for related parts by each trouble code (S.68. C4091 - C40A4, C5601, C5605, C5606, CA051 - CA053, CC151, CC152, CC15C, CC170 - CC186, CC191 - CC216, CD211 - CD261, CD401 - CD413, CD701 - CD703, CD705, CD706, CE001, CE003 - CE305, CEEE1, CEEE3)

### 3.17.5 CE301, CE302, CE303, CE304, CE305

#### (1) Contents

| | |
|---|---|
| Trouble type | • CE301: Referring incorrect memory<br>• CE302: Incorrect command<br>• CE303: Finished due to error inside Qt library<br>• CE304: Finished due to error outside Qt library<br>• CE305: Program forced to stop |
| Rank | C |
| Trouble detection condition | Error occurred with the process inside the MFP controller. |
| Trouble isolation | - |
| Relevant electrical parts | MFP board (MFPB) |

#### (2) Procedure

1. Check the connectors on MFPB for proper connection and correct as necessary.
2. Replace MFPB.
3. Acquire the debug logs in [Service Mode] -> [Debug Settings] and analyze them.

NOTICE

- Link to the layout drawings for related parts by each trouble code (S.68. C4091 - C40A4, C5601, C5605, C5606, CA051 - CA053, CC151, CC152, CC15C, CC170 - CC186, CC191 - CC216, CD211 - CD261, CD401 - CD413, CD701 - CD703, CD705, CD706, CE001, CE003 - CE305, CEEE1, CEEE3)

### 3.17.6 CED01

#### (1) Contents

| | |
|---|---|
| Trouble type | CED01: The authentication application information does not exist in the hard disk/eMMC board in the enhanced server authentication state. |
| Rank | C |
| Trouble detection condition | With “Enhanced Server Authentication” set, no authentication application registration information is found in the hard disk or the eMMC board (eMMC). |
| Trouble isolation | - |
| Relevant electrical parts | • eMMC board (eMMC)<br>• Hard disk (A) (HDD (A))<br>• Hard disk (B) (HDD (B): HD-524) |

#### (2) Procedure

1. Turn OFF and ON the main power switch.
2. Check the connector from MFPB to hard disk for proper connection and correct as necessary.
3. Check the connector from eMMC to MFPB for proper connection and correct as necessary.
4. Logically format the hard disk.
5. Replace the hard disk. (HDD (A) / HDD (B))
6. If the above actions do not solve the problem, contact KM.

NOTICE

- Link to the layout drawings for related parts by each trouble code (S.107. CED01)

### 3.17.7 CEEE1, CEEE3

#### (1) Contents

| | |
|---|---|
| Trouble type | • CEEE1: MFP board (MSC) malfunction<br>• CEEE3: MFP board (ENG) malfunction |
| Rank | C |

| | |
|---|---|
| Trouble detection condition | MFP board (MFPB) is faulty. |
| Trouble isolation | - |
| Relevant electrical parts | MFP board (MFPB) |

#### (2) Procedure

1. Check the connectors on MFPB for proper connection and correct as necessary.
2. Replace MFPB.

NOTICE

- Link to the layout drawings for related parts by each trouble code (S.68. C4091 - C40A4, C5601, C5605, C5606, CA051 - CA053, CC151, CC152, CC15C, CC170 - CC186, CC191 - CC216, CD211 - CD261, CD401 - CD413, CD701 - CD703, CD705, CD706, CE001, CE003 - CE305, CEEE1, CEEE3)

### 3.17.8 CEEE2

#### (1) Contents

| | |
|---|---|
| Trouble type | CEEE2: Scanner section malfunction |
| Rank | A |
| Trouble detection condition | A scanner part is faulty. |
| Trouble isolation | - |
| Relevant electrical parts | • LED exposure unit<br>• CCD board (CCDB)<br>• Scanner drive board (SCDB) |

#### (2) Procedure

1. Correct the connector connection between CCDB and SCDB if faulty.
2. Replace SCDB
3. Replace CCDB

NOTICE

- Link to the layout drawings for related parts by each trouble code (S.108. CEEE2)

# 4. ABORT CODE

## 4.1 Troubleshooting of the abort code

- The machine displays an abort code (CF###) on the control panel as it becomes unable to process tasks properly through its software control.
- When the system program is aborted, check the electrical component, unit, option, and connection relating to the specific type of the abort condition.

### 4.1.1 Contents

| | |
|---|---|
| Trouble type | Abort code |
| Trouble code | CF001 to CFFE0 |
| Rank | C |
| Trouble detection condition | - |
| Trouble isolation | - |
| Relevant electrical parts | • MFP board (MFPB)<br>• Memory board (MEMB: UK-211)<br>• EFI relay board (VI-508)<br>• Dual scan image processing board (DSIPB: DF-704)<br>• DSC board/1 (DSCB/1: SC-508)<br>• DSC board/2 (DSCB/2: SC-508)<br>• Hard disk (A) (HDD (A))<br>• Hard disk (B) (HDD (B): HD-524) |

### 4.1.2 Procedure

- When an abort code occurs, take a check and action in the following procedure.

| Step | Section | Check Item | Result | Action |
|---|---|---|---|---|
| 1 | Main power switch | Turn OFF and ON the main power switch, and check if the Abort code appears again. | NO | When not reappearing, continuous use is carried out, and it is checked whether an abort code occurs. |
| 2 | Connector connection | Check the connector for proper connection and correct as necessary.<br>• MFP board (MFPB)<br>• Memory board (MEMB: UK-211, Expansion memory)<br>• EFI relay board (VI-508)<br>• Dual scan image processing board (DSIPB: DF-704)<br>• DSC board/1 (DSCB/1: SC-508)<br>• DSC board/2 (DSCB/2: SC-508)<br>• Hard disk (A) (HDD (A))<br>• Hard disk (B) (HDD (B): HD-524) | NO | It will correct, if connector connection has abnormalities. |
| 3 | Firmware | Update the firmware to the latest version, and check if the Abort code appears again. | NO | Select [Service Mode] -> [Firmware Version] and make sure that the firmware has been updated to the correct version. |
| 4 | Memory Check | Execute [Service Mode] -> [State Confirmation] -> [Memory/Storage Adjustment] -> [Memory Check] -> [Rough Check], and check that no abnormalities. | NO | When "NG" is displayed, replace the appropriate memory or PWB.<br>• WORK0: Standard memory (MFPB)<br>• WORK1: Memory board (MEMB: UK-211)<br>• FILE0,1: MFP board (MFPB)<br>• FILE2,3: EFI relay board (VI-508)<br>• FILE4,5: Dual scan image processing board (DSIPB: DF-704) |
| 5 | Storage R/W Check | Execute [Service Mode] -> [State Confirmation] -> [Memory/Storage Adjustment] -> [Storage R/W Check], and check that no abnormalities. | NO | When "NG" is displayed, replace the hard disk (HDD). |
| 6 | MFP board | Replace the MFP board (MFPB), and then check the MFPB. | NO | Other electric parts indicated to Component of abort code list are replaced. |

## 4.2 CF0##

| Error code | Item | | Component | Rank |
|---|---|---|---|---|
| CF001 | CT_singleList table abnormal | An exceptional instance occurred due to the unexpected parameter in the system F/W. | MFP board (MFPB) | C |
| CF004 | CT_queue full abnormal | | | |
| CF011 | Array link abnormal | | | |
| CF012 | FAT link abnormal | | | |
| CF013 | File size abnormal | | | |
| CF021 | setDelayMessage Table OverFlow | | | |
| CF023 | MsgQue OverFlow | | | |
| CF033 | setDivTbl() limitation over | | | |

| Error code | Item | | Component | Rank |
|---|---|---|---|---|
| CF061 | IdeCommand_Set() status Abnormal | | | |
| CF062 | IdeCommand_Set() parameter Abnormal | | | |

### 4.3 CF1##

| Error code | Item | | Component | Rank |
|---|---|---|---|---|
| CF112 | Compress table OverFlow | Compression malfunctions | MFP board (MFPB) | C |
| CF113 | Compress table check | | | |
| CF122 | Expand Table OverFlow | | | |

### 4.4 CF2##

| Error code | Item | | Component | Rank |
|---|---|---|---|---|
| CF211 | setParameterBandColorPlane() Table OverFlow | An exceptional instance occurred due to the unexpected parameter in the system F/W. | MFP board (MFPB) | C |

### 4.5 CF3##

| Error code | Item | | Component | Rank |
|---|---|---|---|---|
| CF300 | IR Bus Check Timeout | Image transfer error on IR input bus | MFP board (MFPB) | C |

### 4.6 CF4##

| Error code | Item | | Component | Rank |
|---|---|---|---|---|
| CF411 | Parity error | Communication error (between IR-systems) | MFP board (MFPB) | C |
| CF412 | Parity error | | | |
| CF421 | Overrun error | | | |
| CF422 | Overrun error | | | |
| CF431 | Parity error + Overrun error | | | |
| CF432 | Parity error + Overrun error | | | |
| CF441 | Framing error | | | |
| CF442 | Framing error | | | |
| CF451 | Parity error + Framing error | | | |
| CF452 | Parity error + Framing error | | | |
| CF461 | Overrun error + Framing error | | | |
| CF462 | Overrun error + Framing error | | | |
| CF471 | Parity error + Overrun error + Framing error | | | |
| CF472 | Parity error + Overrun error + Framing error | | | |

### 4.7 CF5##

| Error code | Item | | Component | Rank |
|---|---|---|---|---|
| CF510 | Parity error | Communication error (IR detected) | MFP board (MFPB) | C |
| CF520 | Framing error | | | |
| CF530 | Parity error + Framing error | | | |
| CF540 | Overrun error | | | |
| CF550 | Parity error + Overrun error | | | |
| CF560 | Overrun error + Framing error | | | |
| CF570 | Parity error + Overrun error + Framing error | | | |
| CF580 | Frame distortion of DF | | | |

### 4.8 CF6##

| Error code | Item | | Component | Rank |
|---|---|---|---|---|
| CF600 | Report receiving of print start that is out of sequence | An exceptional instance occurred due to the unexpected parameter in the system F/W. | • MFP board (MFPB)<br>• Engine | C |
| CF601 | Report receiving of paper feeding that is out of sequence | | | |

| Error code | Item | | Component | Rank |
|---|---|---|---|---|
| CF604 | Outside IF/Command queue | | MFP board (MFPB) | |
| CF614 | “Output sequence” queue | | | |
| CF624 | Panel LCD date queue | | | |

### 4.9 CF7##

| Error code | Item | | Component | Rank |
|---|---|---|---|---|
| CF704 | Common data “Delete-waiting HDD accumulated job ID” queue | An exceptional instance occurred due to the unexpected parameter in the system F/W. | MFP board (MFPB) | C |
| CF714 | IRC/Command queue | | | |
| CF724 | Engine/Command queue | | • MFP board (MFPB)<br>• Engine | |
| CF734 | Panel/Command queue | | • MFP board (MFPB)<br>• Control panel | |
| CF744 | File memory transfer start-waiting command queue | | MFP board (MFPB) | |
| CF754 | File memory compression requesting command queue | | | |
| CF764 | Panel instruction delete job queue | | | |
| CF774 | Warning delete job queue | | | |
| CF784 | Application instruction delete job queue | | | |
| CF794 | Output page information for duplex back side queue | | | |
| CF7A4 | Paper feed completion output pate information queue | | | |
| CF7B4 | Exposure compaction output page information queue | | | |
| CF7C4 | Pre-discharge completion output page information queue | | | |
| CF7D4 | Touch panel coordinate data queue | | | |
| CF7E4 | Direct key data queue | | | |
| CF7F4 | Scan sequence queue | | | |

### 4.10 CF8##

| Error code | Item | Component | Rank |
|---|---|---|---|
| CF802 | SIO sending port...ENG | • MFP board (MFPB)<br>• Engine | C |
| CF806 | SIO sending port...IRC | MFP board (MFPB) | |
| CF807 | SIO sending port...DF | | |
| CF808 | Transmission buffer overflow (DSC1) | DSC board/1 (DSCB/1: SC-508) | |
| CF809 | Transmission buffer overflow (DSC2) | DSC board/2 (DSCB/2: SC-508) | |
| CF812 | SIO sending port...Fiery | • MFP board (MFPB)<br>• EFI relay board (VI-508) | |
| CF815 | SIO sending port...PIC/PIC terminal | MFP board (MFPB) | |
| CF8ED | SIO sending port...EPNet | | |

### 4.11 CF9##

| Error code | Item | Component | Rank |
|---|---|---|---|
| CF902 | SIO receiving port...ENG | • MFP board (MFPB)<br>• Engine | C |
| CF906 | SIO receiving port...IRC | MFP board (MFPB) | |
| CF907 | SIO receiving port...DF | | |
| CF908 | Reception buffer overflow (DSC1) | DSC board/1 (DSCB/1: SC-508) | |
| CF909 | Reception buffer overflow (DSC2) | DSC board/2 (DSCB/2: SC-508) | |
| CF912 | SIO receiving port...Fiery | • MFP board (MFPB)<br>• EFI relay board (VI-508) | |
| CF915 | SIO receiving port...PIC/PIC terminal | MFP board (MFPB) | |

| Error code | Item | Component | Rank |
|---|---|---|---|
| CF9ED | SIO receiving port...EPNet | | |

## 4.12 CFA##

| Error code | Item | | Component | Rank |
|---|---|---|---|---|
| CFA01 | getOneImgTransInfoFromTh ( ) (Thread ID and thread common parameters used) No applied thread | An exceptional instance occurred due to the unexpected parameter in the system F/W. | MFP board (MFPB) | C |
| CFA03 | setTransBandAndRepeatNum() error | | | |
| CFA06 | getOneImgIndexNumFromTh ( ) No applied thread | | | |
| CFA11 | cancelTransExec ( ) No applied thread | | | |
| CFA12 | ImgTransInfo No space | | | |
| CFA13 | Clear Buffer Sequence error | | | |
| CFA14 | Application error inside the MFP board | | • MFP board (MFPB)<br>• Memory board (MEMB: UK-211)<br>• Hard disk (A) (HDD (A))<br>• Hard disk (B) (HDD (B): HD-524) | |
| CFA15 | Global semaphore time out (ten seconds) | | • MFP board (MFPB)<br>• Hard disk (A) (HDD (A))<br>• Hard disk (B) (HDD (B): HD-524) | |
| CFA16 | Thread software error (upper parameter error) | | | |
| CFA17 | Thread error caused by buffer sequence error | | | |
| CFA18 | Thread error detected in the VD state at DMA00 startup. | | | |
| CFA50 | IGC control error | DB error | | |
| CFA51 | | IGC internal error | | |

## 4.13 CFB##

### 4.13.1 CFB0#

| Error code | Item | Component | Rank |
|---|---|---|---|
| CFB00 | ASIC777 DMA00 | MFP board (MFPB) | C |
| CFB01 | ASIC777 DMA01 | | |
| CFB02 | ASIC777 DMA02 | | |
| CFB03 | ASIC777 DMA03 | | |
| CFB04 | ASIC777 DMA04 | | |
| CFB05 | ASIC777 DMA05 | | |
| CFB06 | ASIC777 DMA06 | | |
| CFB07 | ASIC777 DMA07 | | |
| CFB08 | ASIC777 DMA08 | | |
| CFB09 | ASIC777 DMA09 | | |
| CFB0A | ASIC777 DMA10 | | |
| CFB0B | ASIC777 DMA11 | | |
| CFB0C | ASIC777 DMA12 | | |
| CFB0D | ASIC777 DMA13 | | |
| CFB0E | ASIC777 DMA14 | | |
| CFB0F | ASIC777 DMA15 | | |

### 4.13.2 CFB1#

| Error code | Item | Component | Rank |
|---|---|---|---|
| CFB10 | ASIC777 DMA16 | MFP board (MFPB) | C |
| CFB11 | ASIC777 DMA17 | | |
| CFB12 | ASIC777 DMA18 | | |
| CFB13 | ASIC777 DMA19 | | |
| CFB14 | ASIC777 DMA20 | | |
| CFB15 | ASIC777 DMA21 | | |
| CFB16 | ASIC777 DMA22 | | |
| CFB17 | ASIC777 DMA23 | | |
| CFB18 | ASIC777 DMA24 | | |

| Error code | Item | Component | Rank |
|---|---|---|---|
| CFB19 | ASIC777 DMA25 | | |
| CFB1A | ASIC777 DMA26 | | |
| CFB1B | ASIC777 DMA27 | | |
| CFB1C | ASIC777 DMA28 | | |
| CFB1D | ASIC777 DMA29 | | |
| CFB1E | ASIC777 DMA30 | | |
| CFB1F | ASIC777 DMA31 | | |

### 4.13.3 CFB2#

| Error code | Item | Component | Rank |
|---|---|---|---|
| CFB20 | ASIC777 DMA32 | MFP board (MFPB) | C |
| CFB21 | ASIC777 DMA33 | | |
| CFB22 | ASIC777 DMA34 | | |
| CFB23 | ASIC777 DMA35 | | |
| CFB24 | ASIC777 DMA36 | | |
| CFB25 | ASIC777 DMA37 | | |
| CFB26 | ASIC777 DMA38 | | |
| CFB27 | ASIC777 DMA39 | | |
| CFB28 | ASIC777 DMA40 | | |
| CFB29 | ASIC777 DMA41 | | |
| CFB2A | ASIC777 DMA42 | | |
| CFB2B | ASIC777 DMA43 | | |
| CFB2C | ASIC777 DMA44 | | |
| CFB2D | ASIC777 DMA45 | | |
| CFB2E | ASIC777 DMA46 | | |
| CFB2F | ASIC777 DMA47 | | |

### 4.13.4 CFB3#

| Error code | Item | Component | Rank |
|---|---|---|---|
| CFB30 | ASIC777 DMA48 | • MFP board (MFPB)<br>• EFI relay board (VI-508) | C |
| CFB31 | ASIC777 DMA49 | | |
| CFB32 | ASIC777 DMA50 | | |
| CFB33 | ASIC777 DMA51 | | |
| CFB34 | ASIC777 DMA52 | | |
| CFB35 | ASIC777 DMA53 | | |
| CFB36 | ASIC777 DMA54 | | |
| CFB37 | ASIC777 DMA55 | | |
| CFB38 | EFI relay board (Asic30) DMA00 | | |
| CFB39 | EFI relay board (Asic30) DMA01 | | |
| CFB3A | EFI relay board (Asic30) DMA02 | | |
| CFB3B | EFI relay board (Asic30) DMA03 | | |
| CFB3C | EFI relay board (Asic30) DMA04 | | |
| CFB3D | EFI relay board (Asic30) DMA05 | | |
| CFB3E | EFI relay board (Asic30) DMA06 | | |
| CFB3F | EFI relay board (Asic30) DMA07 | | |

### 4.13.5 CFB4#

| Error code | Item | Component | Rank |
|---|---|---|---|
| CFB40 | EFI relay board (Asic30) DMA08 | EFI relay board (VI-508) | C |
| CFB41 | EFI relay board (Asic30) DMA09 | | |
| CFB42 | EFI relay board (Asic30) DMA10 | | |
| CFB43 | EFI relay board (Asic30) DMA11 | | |
| CFB44 | EFI relay board (Asic30) DMA12 | | |
| CFB45 | EFI relay board (Asic30) DMA13 | | |
| CFB46 | EFI relay board (Asic30) DMA14 | | |
| CFB47 | EFI relay board (Asic30) DMA15 | | |
| CFB48 | EFI relay board (Asic30) DMA16 | | |

| Error code | Item | Component | Rank |
|---|---|---|---|
| CFB49 | EFI relay board (Asic30) DMA17 | | |
| CFB4A | EFI relay board (Asic30) DMA18 | | |
| CFB4B | EFI relay board (Asic30) DMA19 | | |
| CFB4C | EFI relay board (Asic30) DMA20 | | |
| CFB4D | EFI relay board (Asic30) DMA21 | | |
| CFB4E | EFI relay board (Asic30) DMA22 | | |
| CFB4F | EFI relay board (Asic30) DMA23 | | |

### 4.13.6 CFB5#

| Error code | Item | Component | Rank |
|---|---|---|---|
| CFB50 | EFI relay board (Asic30) DMA24 | • Dual scan image processing board (DSIPB: DF-704)<br>• EFI relay board (VI-508) | C |
| CFB51 | EFI relay board (Asic30) DMA25 | | |
| CFB52 | EFI relay board (Asic30) DMA26 | | |
| CFB53 | EFI relay board (Asic30) DMA27 | | |
| CFB54 | EFI relay board (Asic30) DMA28 | | |
| CFB55 | EFI relay board (Asic30) DMA29 | | |
| CFB56 | EFI relay board (Asic30) DMA30 | | |
| CFB57 | EFI relay board (Asic30) DMA31 | | |
| CFB58 | Dual scan image processing board (Asic30/Asic777) DMA00 | | |
| CFB59 | Dual scan image processing board (Asic30/Asic777) DMA01 | | |
| CFB5A | Dual scan image processing board (Asic30/Asic777) DMA02 | | |
| CFB5B | Dual scan image processing board (Asic30/Asic777) DMA03 | | |
| CFB5C | Dual scan image processing board (Asic30/Asic777) DMA04 | | |
| CFB5D | Dual scan image processing board (Asic30/Asic777) DMA05 | | |
| CFB5E | Dual scan image processing board (Asic30/Asic777) DMA06 | | |
| CFB5F | Dual scan image processing board (Asic30/Asic777) DMA07 | | |

### 4.13.7 CFB6#

| Error code | Item | Component | Rank |
|---|---|---|---|
| CFB60 | Dual scan image processing board (Asic30/Asic777) DMA08 | Dual scan image processing board (DSIPB: DF-704) | C |
| CFB61 | Dual scan image processing board (Asic30/Asic777) DMA09 | | |
| CFB62 | Dual scan image processing board (Asic30/Asic777) DMA10 | | |
| CFB63 | Dual scan image processing board (Asic30/Asic777) DMA11 | | |
| CFB64 | Dual scan image processing board (Asic30/Asic777) DMA12 | | |
| CFB65 | Dual scan image processing board (Asic30/Asic777) DMA13 | | |
| CFB66 | Dual scan image processing board (Asic30/Asic777) DMA14 | | |
| CFB67 | Dual scan image processing board (Asic30/Asic777) DMA15 | | |
| CFB68 | Dual scan image processing board (Asic30/Asic777) DMA16 | | |
| CFB69 | Dual scan image processing board (Asic30/Asic777) DMA17 | | |
| CFB6A | Dual scan image processing board (Asic30/Asic777) DMA18 | | |
| CFB6B | Dual scan image processing board (Asic30/Asic777) DMA19 | | |
| CFB6C | Dual scan image processing board (Asic30/Asic777) DMA20 | | |
| CFB6D | Dual scan image processing board (Asic30/Asic777) DMA21 | | |
| CFB6E | Dual scan image processing board (Asic30/Asic777) DMA22 | | |
| CFB6F | Dual scan image processing board (Asic30/Asic777) DMA23 | | |

### 4.13.8 CFB7#

| Error code | Item | Component | Rank |
|---|---|---|---|
| CFB70 | Dual scan image processing board (Asic30/Asic777) DMA24 | Dual scan image processing board (DSIPB: DF-704) | C |
| CFB71 | Dual scan image processing board (Asic30/Asic777) DMA25 | | |
| CFB72 | Dual scan image processing board (Asic30/Asic777) DMA26 | | |
| CFB73 | Dual scan image processing board (Asic30/Asic777) DMA27 | | |
| CFB74 | Dual scan image processing board (Asic30/Asic777) DMA28 | | |
| CFB75 | Dual scan image processing board (Asic30/Asic777) DMA29 | | |
| CFB76 | Dual scan image processing board (Asic30/Asic777) DMA30 | | |
| CFB77 | Dual scan image processing board (Asic30/Asic777) DMA31 | | |
| CFB78 | Dual scan image processing board (Asic777) DMA32 | | |

| Error code | Item | Component | Rank |
|---|---|---|---|
| CFB79 | Dual scan image processing board (Asic777) DMA33 | | |
| CFB7A | Dual scan image processing board (Asic777) DMA34 | | |
| CFB7B | Dual scan image processing board (Asic777) DMA35 | | |
| CFB7C | Dual scan image processing board (Asic777) DMA36 | | |
| CFB7D | Dual scan image processing board (Asic777) DMA37 | | |
| CFB7E | Dual scan image processing board (Asic777) DMA38 | | |
| CFB7F | Dual scan image processing board (Asic777) DMA39 | | |

### 4.13.9 CFB8#

| Error code | Item | Component | Rank |
|---|---|---|---|
| CFB80 | Dual scan image processing board (Asic777) DMA40 | Dual scan image processing board (DSIPB: DF-704) | C |
| CFB81 | Dual scan image processing board (Asic777) DMA41 | | |
| CFB82 | Dual scan image processing board (Asic777) DMA42 | | |
| CFB83 | Dual scan image processing board (Asic777) DMA43 | | |
| CFB84 | Dual scan image processing board (Asic777) DMA44 | | |
| CFB85 | Dual scan image processing board (Asic777) DMA45 | | |
| CFB86 | Dual scan image processing board (Asic777) DMA46 | | |
| CFB87 | Dual scan image processing board (Asic777) DMA47 | | |
| CFB88 | Dual scan image processing board (Asic777) DMA48 | | |
| CFB89 | Dual scan image processing board (Asic777) DMA49 | | |
| CFB8A | Dual scan image processing board (Asic777) DMA50 | | |
| CFB8B | Dual scan image processing board (Asic777) DMA51 | | |
| CFB8C | Dual scan image processing board (Asic777) DMA52 | | |
| CFB8D | Dual scan image processing board (Asic777) DMA53 | | |
| CFB8E | Dual scan image processing board (Asic777) DMA54 | | |
| CFB8F | Dual scan image processing board (Asic777) DMA55 | | |

### 4.13.10 CFB9#

| Error code | Item | Component | Rank |
|---|---|---|---|
| CFB93 | Asic (PMS) DMA03 | MFP board (MFPB) | C |
| CFB97 | Asic (PMS) DMA07 | | |

### 4.13.11 CFBA#

| Error code | Item | Component | Rank |
|---|---|---|---|
| CFBA2 | Asic (PMS) DMA18 | MFP board (MFPB) | C |
| CFBA3 | Asic (PMS) DMA19 | | |
| CFBA4 | Asic (PMS) DMA32 | | |
| CFBA5 | Asic (PMS) DMA33 | | |
| CFBA6 | Asic (PMS) DMA34 | | |
| CFBA7 | Asic (PMS) DMA35 | | |
| CFBA8 | Asic (PMS) DMA36 | | |
| CFBA9 | Asic (PMS) DMA37 | | |
| CFBAA | Asic (PMS) DMA38 | | |
| CFBAB | Asic (PMS) DMA39 | | |
| CFBAC | Asic (PMS) DMA40 | | |
| CFBAD | Asic (PMS) DMA41 | | |
| CFBAE | Asic (PMS) DMA42 | | |
| CFBAF | Asic (PMS) DMA43 | | |

### 4.13.12 CFBB#

| Error code | Item | Component | Rank |
|---|---|---|---|
| CFBB0 | EFI relay board (second Asic30) DMA00 | EFI relay board (VI-508) | C |
| CFBB1 | EFI relay board (second Asic30) DMA01 | | |
| CFBB2 | EFI relay board (second Asic30) DMA02 | | |
| CFBB3 | EFI relay board (second Asic30) DMA03 | | |
| CFBB4 | EFI relay board (second Asic30) DMA04 | | |
| CFBB5 | EFI relay board (second Asic30) DMA05 | | |

| Error code | Item | Component | Rank |
|---|---|---|---|
| CFBB6 | EFI relay board (second Asic30) DMA06 | | |
| CFBB7 | EFI relay board (second Asic30) DMA07 | | |
| CFBB8 | EFI relay board (second Asic30) DMA08 | | |
| CFBB9 | EFI relay board (second Asic30) DMA09 | | |
| CFBBA | EFI relay board (second Asic30) DMA10 | | |
| CFBBB | EFI relay board (second Asic30) DMA11 | | |
| CFBBC | EFI relay board (second Asic30) DMA12 | | |
| CFBBD | EFI relay board (second Asic30) DMA13 | | |
| CFBBE | EFI relay board (second Asic30) DMA14 | | |
| CFBBF | EFI relay board (second Asic30) DMA15 | | |

### 4.13.13 CFBC#

| Error code | Item | Component | Rank |
|---|---|---|---|
| CFBC0 | EFI relay board (second Asic30) DMA16 | EFI relay board (VI-508) | C |
| CFBC1 | EFI relay board (second Asic30) DMA17 | | |
| CFBC2 | EFI relay board (second Asic30) DMA18 | | |
| CFBC3 | EFI relay board (second Asic30) DMA19 | | |
| CFBC4 | EFI relay board (second Asic30) DMA20 | | |
| CFBC5 | EFI relay board (second Asic30) DMA21 | | |
| CFBC6 | EFI relay board (second Asic30) DMA22 | | |
| CFBC7 | EFI relay board (second Asic30) DMA23 | | |
| CFBC8 | EFI relay board (second Asic30) DMA24 | | |
| CFBC9 | EFI relay board (second Asic30) DMA25 | | |
| CFBCA | EFI relay board (second Asic30) DMA26 | | |
| CFBCB | EFI relay board (second Asic30) DMA27 | | |
| CFBCC | EFI relay board (second Asic30) DMA28 | | |
| CFBCD | EFI relay board (second Asic30) DMA29 | | |
| CFBCE | EFI relay board (second Asic30) DMA30 | | |
| CFBCF | EFI relay board (second Asic30) DMA31 | | |

### 4.13.14 CFBD#

| Error code | Item | Component | Rank |
|---|---|---|---|
| CFBD0 | Dual scan image processing board JPEG DMA_A | • MFP board (MFPB)<br>• Dual scan image processing board (DSIPB: DF-704)<br>• EFI relay board (VI-508) | C |
| CFBD1 | Dual scan image processing board JPEG DMA_C | | |
| CFBD2 | Dual scan image processing board JPEG DMA_D | | |
| CFBD3 | ASIC777 interruption | | |
| CFBD4 | EFI relay board (Asic30) interruption | | |
| CFBD5 | Dual scan image processing board (Asic30) interruption | | |
| CFBD6 | Asic (PMS) interruption | | |
| CFBD7 | EFI relay board (second Asic30) interruption | | |
| CFBD8 | Dual scan image processing board JPEG interruption | | |
| CFBD9 | ASIC777 common register setting | | |
| CFBDA | EFI relay board (Asic30) common register setting | | |
| CFBDB | Dual scan image processing board (Asic30) common register setting | | |
| CFBDC | Asic (PMS) common register setting | | |
| CFBDD | EFI relay board (Asic30) common register setting | | |
| CFBDE | Dual scan image processing board JPEG common register setting | | |
| CFBDF | ASIC777 BTC compression/extension unit | | |

### 4.13.15 CFBE#

| Error code | Item | Component | Rank |
|---|---|---|---|
| CFBE0 | EFI relay board (Asic30) BTC compression/extension unit | • MFP board (MFPB)<br>• Dual scan image processing board (DSIPB: DF-704)<br>• EFI relay board (VI-508) | C |
| CFBE1 | Dual scan image processing board (Asic30) BTC compression/ extension unit | | |
| CFBE2 | Asic (PMS) BTC compression/extension unit | | |
| CFBE3 | EFI relay board (second Asic30) BTC compression/extension unit | | |
| CFBE4 | Dual scan image processing board JPEG BTC compression/extension unit | | |

| Error code | Item | Component | Rank |
|---|---|---|---|
| CFBE5 | ASIC777 DMA00 error interruption | | |
| CFBE6 | ASIC777 DMA01 error interruption | | |
| CFBE7 | ASIC777 DMA02 error interruption | | |
| CFBE8 | ASIC777 DMA03 error interruption | | |
| CFBE9 | ASIC777 DMA04 error interruption | | |
| CFBEA | ASIC777 DMA05 error interruption | | |
| CFBEB | ASIC777 DMA06 error interruption | | |
| CFBEC | ASIC777 DMA07 error interruption | | |
| CFBED | ASIC777 DMA08 error interruption | | |
| CFBEE | ASIC777 DMA09 error interruption | | |
| CFBEF | ASIC777 DMA10 error interruption | | |

#### 4.13.16 CFBF#

| Error code | Item | Component | Rank |
|---|---|---|---|
| CFBF0 | ASIC777 DMA11 error interruption | MFP board (MFPB) | C |
| CFBF1 | ASIC777 DMA12 error interruption | | |
| CFBF2 | ASIC777 DMA13 error interruption | | |
| CFBF3 | ASIC777 DMA14 error interruption | | |
| CFBF4 | ASIC777 DMA15 error interruption | | |
| CFBF5 | ASIC777 DMA16 error interruption | | |
| CFBF6 | ASIC777 DMA17 error interruption | | |
| CFBF7 | ASIC777 DMA18 error interruption | | |
| CFBF8 | ASIC777 DMA19 error interruption | | |
| CFBF9 | ASIC777 DMA20 error interruption | | |
| CFBFA | ASIC777 DMA21 error interruption | | |
| CFBFB | ASIC777 DMA22 error interruption | | |
| CFBFC | ASIC777 DMA23 error interruption | | |
| CFBFD | ASIC777 DMA24 error interruption | | |
| CFBFE | ASIC777 DMA25 error interruption | | |
| CFBFF | ASIC777 DMA26 error interruption | | |

### 4.14 CFC##

#### 4.14.1 CFC0#

| Error code | Item | Component | Rank |
|---|---|---|---|
| CFC00 | ASIC777 DMA27 error interruption | MFP board (MFPB) | C |
| CFC01 | ASIC777 DMA28 error interruption | | |
| CFC02 | ASIC777 DMA29 error interruption | | |
| CFC03 | ASIC777 DMA30 error interruption | | |
| CFC04 | ASIC777 DMA31 error interruption | | |
| CFC05 | ASIC777 DMA32 error interruption | | |
| CFC06 | ASIC777 DMA33 error interruption | | |
| CFC07 | ASIC777 DMA34 error interruption | | |
| CFC08 | ASIC777 DMA35 error interruption | | |
| CFC09 | ASIC777 DMA36 error interruption | | |
| CFC0A | ASIC777 DMA37 error interruption | | |
| CFC0B | ASIC777 DMA38 error interruption | | |
| CFC0C | ASIC777 DMA39 error interruption | | |
| CFC0D | ASIC777 DMA40 error interruption | | |
| CFC0E | ASIC777 DMA41 error interruption | | |
| CFC0F | ASIC777 DMA42 error interruption | | |

#### 4.14.2 CFC1#

| Error code | Item | Component | Rank |
|---|---|---|---|
| CFC10 | ASIC777 DMA43 error interruption | MFP board (MFPB) | C |
| CFC11 | ASIC777 DMA44 error interruption | | |
| CFC12 | ASIC777 DMA45 error interruption | | |
| CFC13 | ASIC777 DMA46 error interruption | | |

| Error code | Item | Component | Rank |
|---|---|---|---|
| CFC14 | ASIC777 DMA47 error interruption | | |
| CFC15 | ASIC777 DMA48 error interruption | | |
| CFC16 | ASIC777 DMA49 error interruption | | |
| CFC17 | ASIC777 DMA50 error interruption | | |
| CFC18 | ASIC777 DMA51 error interruption | | |
| CFC19 | ASIC777 DMA52 error interruption | | |
| CFC1A | ASIC777 DMA53 error interruption | | |
| CFC1B | ASIC777 DMA54 error interruption | | |
| CFC1C | ASIC777 DMA55 error interruption | | |
| CFC1D | ASIC777 watchdog timer error interruption | | |
| CFC1E | ASIC777 image output interface had underrun | | |
| CFC1F | ASIC777 image input interface had overflow | | |

### 4.14.3 CFC2#

| Error code | Item | Component | Rank |
|---|---|---|---|
| CFC20 | ASIC777 LCC output interface had underrun | MFP board (MFPB) | C |
| CFC21 | ASIC777 JBIG core detected unknown marker | | |
| CFC22 | ASIC777 JBIG core detected SC count overflow | | |
| CFC23 | SDTMDT is accessed during ASIC777 soft reset active | | |
| CFC24 | DMA04 (table) is accessed during ASIC777 soft reset active | | |
| CFC25 | DMA06 (FAX debug) is accessed during ASIC777 soft reset active | | |
| CFC26 | ASIC777 SDTMDT had a timeout error | | |
| CFC27 | ASIC777 SDTAAA had a timeout error | | |
| CFC28 | ASIC777 SDTAAA had an access lock error | | |
| CFC29 | An error to access to the invalid area of sub-CPU via ASIC777 SDTAAA | | |
| CFC2A | An overflow detected in ASIC777 DMA14 mdt_ctr_14o | | |
| CFC2B | Compression data size over detected during ASIC777 DMA14 JPEG compression | | |
| CFC2C | ASIC777 DMA14 EOI yet to be detected | | |
| CFC2D | A "1" is set when access is made to the CMM table of DMA14 while the ASIC777 soft reset is being active | | |
| CFC2E | A "1" is set when access is made to the JPEG core slave space of DMA14 while the ASIC777 soft reset is being active | | |
| CFC2F | A "1" is set when access is made to the comment table of DMA14 while the ASIC777 soft reset is being active | | |

### 4.14.4 CFC3#

| Error code | Item | Component | Rank |
|---|---|---|---|
| CFC30 | An overflow detected in ASIC777 DMA15 mdt_ctr_15o | MFP board (MFPB) | C |
| CFC31 | Compression data size over detected during ASIC777 DMA15 JPEG compression | | |
| CFC32 | ASIC777 DMA15 EOI yet to be detected | | |
| CFC33 | A "1" is set when access is made to the CMM table of DMA15 while the ASIC777 soft reset is being active | | |
| CFC34 | A "1" is set when access is made to the JPEG core slave space of DMA15 while the ASIC777 soft reset is being active | | |
| CFC35 | A "1" is set when access is made to the comment table of DMA15 while the ASIC777 soft reset is being active | | |
| CFC36 | Completer Abort exists in ASIC777 memory master access | | |
| CFC37 | Unsupported Request exists in ASIC777 memory master access | | |
| CFC38 | Completion Timeout exists in ASIC777 memory master access | | |
| CFC39 | Poisoned TLP exists in ASIC777 memory master access | | |
| CFC3A | Unsupported Request exists in ASIC777 memory target access | | |
| CFC3B | Poisoned TLP exists in ASIC777 memory target access | | |
| CFC3C | Unsupported Request TLP exists in ASIC777 config target access | | |
| CFC3D | Poisoned TLP exists in ASIC777 config target access | | |
| CFC3E | A "1" is set when a rising edge is detected of VD output from the ASIC777 CPS | | |

| Error code | Item | Component | Rank |
|---|---|---|---|
| CFC3F | A "1" is set when a falling edge is detected of VD output from the ASIC777 CPS | | |

### 4.14.5 CFC4#

| Error code | Item | Component | Rank |
|---|---|---|---|
| CFC40 | A "1" is set when a rising edge is detected of VD output from the ASIC777 DMA03 | • MFP board (MFPB)<br>• EFI relay board (VI-508) | C |
| CFC41 | A "1" is set when a falling edge is detected of VD output from the ASIC777 DMA03 | | |
| CFC42 | A "1" is set when a falling edge is detected of VSYNC input to the ASIC777 DMA03 | | |
| CFC43 | ASIC777 Emepror-IP error | | |
| CFC44 | ASIC777 external bus error | | |
| CFC45 | ASIC777 PC delay interrupt (INT_PCD0) | | |
| CFC46 | ASIC777 PC delay interrupt (INT_PCD1) | | |
| CFC47 | ASIC777 PC delay interrupt (INT_PCD2) | | |
| CFC48 | EFI relay board (Asic30) DMA00 error interruption | | |
| CFC49 | EFI relay board (Asic30) DMA01 error interruption | | |
| CFC4A | EFI relay board (Asic30) DMA02 error interruption | | |
| CFC4B | EFI relay board (Asic30) DMA03 error interruption | | |
| CFC4C | EFI relay board (Asic30) DMA04 error interruption | | |
| CFC4D | EFI relay board (Asic30) DMA05 error interruption | | |
| CFC4E | EFI relay board (Asic30) DMA06 error interruption | | |
| CFC4F | EFI relay board (Asic30) DMA07 error interruption | | |

### 4.14.6 CFC5#

| Error code | Item | Component | Rank |
|---|---|---|---|
| CFC50 | EFI relay board (Asic30) DMA08 error interruption | EFI relay board (VI-508) | C |
| CFC51 | EFI relay board (Asic30) DMA09 error interruption | | |
| CFC52 | EFI relay board (Asic30) DMA10 error interruption | | |
| CFC53 | EFI relay board (Asic30) DMA11 error interruption | | |
| CFC54 | EFI relay board (Asic30) DMA12 error interruption | | |
| CFC55 | EFI relay board (Asic30) DMA13 error interruption | | |
| CFC56 | EFI relay board (Asic30) DMA14 error interruption | | |
| CFC57 | EFI relay board (Asic30) DMA15 error interruption | | |
| CFC58 | EFI relay board (Asic30) DMA16 error interruption | | |
| CFC59 | EFI relay board (Asic30) DMA17 error interruption | | |
| CFC5A | EFI relay board (Asic30) DMA18 error interruption | | |
| CFC5B | EFI relay board (Asic30) DMA19 error interruption | | |
| CFC5C | EFI relay board (Asic30) DMA20 error interruption | | |
| CFC5D | EFI relay board (Asic30) DMA21 error interruption | | |
| CFC5E | EFI relay board (Asic30) DMA22 error interruption | | |
| CFC5F | EFI relay board (Asic30) DMA23 error interruption | | |

### 4.14.7 CFC6#

| Error code | Item | Component | Rank |
|---|---|---|---|
| CFC60 | EFI relay board (Asic30) DMA24 error interruption | EFI relay board (VI-508) | C |
| CFC61 | EFI relay board (Asic30) DMA25 error interruption | | |
| CFC62 | EFI relay board (Asic30) DMA26 error interruption | | |
| CFC63 | EFI relay board (Asic30) DMA27 error interruption | | |
| CFC64 | EFI relay board (Asic30) DMA28 error interruption | | |
| CFC65 | EFI relay board (Asic30) DMA29 error interruption | | |
| CFC66 | EFI relay board (Asic30) DMA30 error interruption | | |
| CFC67 | EFI relay board (Asic30) DMA31 error interruption | | |
| CFC68 | EFI relay board (Asic30) image input interface had overflow | | |
| CFC69 | EFI relay board (Asic30) JBIG core detected unknown marker | | |
| CFC6A | EFI relay board (Asic30) JBIG core detected SC count overflow | | |
| CFC6B | SDTMDT is accessed during EFI relay board (Asic30) soft reset active | | |

| Error code | Item | Component | Rank |
|---|---|---|---|
| CFC6C | EmperorIP is accessed during EFI relay board (Asic30) soft reset active | | |
| CFC6D | EFI relay board (Asic30) SDTMDT had a timeout error | | |
| CFC6E | Completer Abort exists in EFI relay board (Asic30) memory master access | | |
| CFC6F | supported Request exists in EFI relay board (Asic30) memory master access | | |

### 4.14.8 CFC7#

| Error code | Item | Component | Rank |
|---|---|---|---|
| CFC70 | Completion Timeout exists in EFI relay board (Asic30) memory master access | • EFI relay board (VI-508)<br>• Dual scan image processing board (DSIPB: DF-704) | C |
| CFC71 | Poisoned TLP exists in EFI relay board (Asic30) memory master access | | |
| CFC72 | Unsupported Request exists in EFI relay board (Asic30) memory target access | | |
| CFC73 | Poisoned TLP exists in EFI relay board (Asic30) memory target access | | |
| CFC74 | Unsupported Request TLP exists in EFI relay board (Asic30) config target access | | |
| CFC75 | Poisoned TLP exists in EFI relay board (Asic30) config target access | | |
| CFC76 | EFI relay board (Asic30) Emepror-IP error | | |
| CFC77 | Dual scan image processing board (Asic30/Asic777) DMA00 error interruption | | |
| CFC78 | Dual scan image processing board (Asic30/Asic777) DMA01 error interruption | | |
| CFC79 | Dual scan image processing board (Asic30/Asic777) DMA02 error interruption | | |
| CFC7A | Dual scan image processing board (Asic30/Asic777) DMA03 error interruption | | |
| CFC7B | Dual scan image processing board (Asic30/Asic777) DMA04 error interruption | | |
| CFC7C | Dual scan image processing board (Asic30/Asic777) DMA05 error interruption | | |
| CFC7D | Dual scan image processing board (Asic30/Asic777) DMA06 error interruption | | |
| CFC7E | Dual scan image processing board (Asic30/Asic777) DMA07 error interruption | | |
| CFC7F | Dual scan image processing board (Asic30/Asic777) DMA08 error interruption | | |

### 4.14.9 CFC8#

| Error code | Item | Component | Rank |
|---|---|---|---|
| CFC80 | Dual scan image processing board (Asic30/Asic777) DMA09 error interruption | Dual scan image processing board (DSIPB: DF-704) | C |
| CFC81 | Dual scan image processing board (Asic30/Asic777) DMA10 error interruption | | |
| CFC82 | Dual scan image processing board (Asic30/Asic777) DMA11 error interruption | | |
| CFC83 | Dual scan image processing board (Asic30/Asic777) DMA12 error interruption | | |
| CFC84 | Dual scan image processing board (Asic30/Asic777) DMA13 error interruption | | |
| CFC85 | Dual scan image processing board (Asic30/Asic777) DMA14 error interruption | | |
| CFC86 | Dual scan image processing board (Asic30/Asic777) DMA15 error interruption | | |
| CFC87 | Dual scan image processing board (Asic30/Asic777) DMA16 error interruption | | |
| CFC88 | Dual scan image processing board (Asic30/Asic777) DMA17 error interruption | | |
| CFC89 | Dual scan image processing board (Asic30/Asic777) DMA18 error interruption | | |

| Error code | Item | Component | Rank |
|---|---|---|---|
| CFC8A | Dual scan image processing board (Asic30/Asic777) DMA19 error interruption | | |
| CFC8B | Dual scan image processing board (Asic30/Asic777) DMA20 error interruption | | |
| CFC8C | Dual scan image processing board (Asic30/Asic777) DMA21 error interruption | | |
| CFC8D | Dual scan image processing board (Asic30/Asic777) DMA22 error interruption | | |
| CFC8E | Dual scan image processing board (Asic30/Asic777) DMA23 error interruption | | |
| CFC8F | Dual scan image processing board (Asic30/Asic777) DMA24 error interruption | | |

### 4.14.10 CFC9#

| Error code | Item | Component | Rank |
|---|---|---|---|
| CFC90 | Dual scan image processing board (Asic30/Asic777) DMA25 error interruption | Dual scan image processing board (DSIPB: DF-704) | C |
| CFC91 | Dual scan image processing board (Asic30/Asic777) DMA26 error interruption | | |
| CFC92 | Dual scan image processing board (Asic30/Asic777) DMA27 error interruption | | |
| CFC93 | Dual scan image processing board (Asic30/Asic777) DMA28 error interruption | | |
| CFC94 | Dual scan image processing board (Asic30/Asic777) DMA29 error interruption | | |
| CFC95 | Dual scan image processing board (Asic30/Asic777) DMA30 error interruption | | |
| CFC96 | Dual scan image processing board (Asic30/Asic777) DMA31 error interruption | | |
| CFC97 | Dual scan image processing board (Asic777) DMA32 error interruption | | |
| CFC98 | Dual scan image processing board (Asic777) DMA33 error interruption | | |
| CFC99 | Dual scan image processing board (Asic777) DMA34 error interruption | | |
| CFC9A | Dual scan image processing board (Asic777) DMA35 error interruption | | |
| CFC9B | Dual scan image processing board (Asic777) DMA36 error interruption | | |
| CFC9C | Dual scan image processing board (Asic777) DMA37 error interruption | | |
| CFC9D | Dual scan image processing board (Asic777) DMA38 error interruption | | |
| CFC9E | Dual scan image processing board (Asic777) DMA39 error interruption | | |
| CFC9F | Dual scan image processing board (Asic777) DMA40 error interruption | | |

### 4.14.11 CFCA#

| Error code | Item | Component | Rank |
|---|---|---|---|
| CFCA0 | Dual scan image processing board (Asic777) DMA41 error interruption | Dual scan image processing board (DSIPB: DF-704) | C |
| CFCA1 | Dual scan image processing board (Asic777) DMA42 error interruption | | |
| CFCA2 | Dual scan image processing board (Asic777) DMA43 error interruption | | |
| CFCA3 | Dual scan image processing board (Asic777) DMA44 error interruption | | |
| CFCA4 | Dual scan image processing board (Asic777) DMA45 error interruption | | |
| CFCA5 | Dual scan image processing board (Asic777) DMA46 error interruption | | |
| CFCA6 | Dual scan image processing board (Asic777) DMA47 error interruption | | |

| Error code | Item | Component | Rank |
|---|---|---|---|
| CFCA7 | Dual scan image processing board (Asic777) DMA48 error interruption | | |
| CFCA8 | Dual scan image processing board (Asic777) DMA49 error interruption | | |
| CFCA9 | Dual scan image processing board (Asic777) DMA50 error interruption | | |
| CFCAA | Dual scan image processing board (Asic777) DMA51 error interruption | | |
| CFCAB | Dual scan image processing board (Asic777) DMA52 error interruption | | |
| CFCAC | Dual scan image processing board (Asic777) DMA53 error interruption | | |
| CFCAD | Dual scan image processing board (Asic777) DMA54 error interruption | | |
| CFCAE | Dual scan image processing board (Asic777) DMA55 error interruption | | |
| CFCAF | Dual scan image processing board (Asic777) watchdog timer error interruption | | |

### 4.14.12 CFCB#

| Error code | Item | Component | Rank |
|---|---|---|---|
| CFCB0 | Dual scan image processing board (Asic777) image output interface had underrun | Dual scan image processing board (DSIPB: DF-704) | C |
| CFCB1 | Dual scan image processing board (Asic777) image input interface had overflow | | |
| CFCB2 | Dual scan image processing board (Asic777) LCC output interface had underrun | | |
| CFCB3 | Dual scan image processing board (Asic777) JBIG core detected unknown marker | | |
| CFCB4 | Dual scan image processing board (Asic777) JBIG core detected SC count overflow | | |
| CFCB5 | SDTMDT is accessed during dual scan image processing board (Asic777) soft reset active | | |
| CFCB6 | DMA04 (table) is accessed during dual scan image processing board (Asic777) soft reset active | | |
| CFCB7 | DMA06 (FAX debug) is accessed during dual scan image processing board (Asic777) soft reset active | | |
| CFCB8 | Dual scan image processing board (Asic777) SDTMDT had a timeout error | | |
| CFCB9 | Dual scan image processing board (Asic777) SDTAAA had a timeout error | | |
| CFCBA | Dual scan image processing board (Asic777) SDTAAA had an access lock error | | |
| CFCBB | An error to access to the invalid area of sub-CPU via dual scan image processing board (Asic777) SDTAAA | | |
| CFCBC | An overflow detected in dual scan image processing board (Asic777) DMA14 mdt_ctr_14o | | |
| CFCBD | Compression data size over detected during dual scan image processing board (Asic777) DMA14 JPEG compression | | |
| CFCBE | Dual scan image processing board (Asic777) DMA14 EOI yet to be detected | | |
| CFCBF | A "1" is set when access is made to the CMM table of DMA14 while the dual scan image processing board (Asic777) soft reset is being active | | |

### 4.14.13 CFCC#

| Error code | Item | Component | Rank |
|---|---|---|---|
| CFCC0 | A "1" is set when access is made to the JPEG core slave space of DMA14 while the dual scan image processing board (Asic777) soft reset is being active | Dual scan image processing board (DSIPB: DF-704) | C |
| CFCC1 | A "1" is set when access is made to the comment table of DMA14 while the dual scan image processing board (Asic777) soft reset is being active | | |
| CFCC2 | An overflow detected in dual scan image processing board (Asic777) DMA15 mdt_ctr_15o | | |

| Error code | Item | Component | Rank |
|---|---|---|---|
| CFCC3 | Compression data size over detected during dual scan image processing board (Asic777) DMA15 JPEG compression | | |
| CFCC4 | Dual scan image processing board (Asic777) DMA15 EOI yet to be detected | | |
| CFCC5 | A "1" is set when access is made to the CMM table of DMA15 while the dual scan image processing board (Asic777) soft reset is being active | | |
| CFCC6 | A "1" is set when access is made to the JPEG core slave space of DMA15 while the dual scan image processing board (Asic777) soft reset is being active | | |
| CFCC7 | A "1" is set when access is made to the comment table of DMA15 while the dual scan image processing board (Asic777) soft reset is being active | | |
| CFCC8 | Completer Abort exists in dual scan image processing board (Asic777) memory master access | | |
| CFCC9 | Unsupported Request exists in dual scan image processing board (Asic777) memory master access | | |
| CFCCA | Completion Timeout exists in dual scan image processing board (Asic777) memory master access | | |
| CFCCB | Poisoned TLP exists in dual scan image processing board (Asic777) memory master access | | |
| CFCCC | Unsupported Request exists in dual scan image processing board (Asic777) memory target access | | |
| CFCCD | Poisoned TLP exists in dual scan image processing board (Asic777) memory target access | | |
| CFCCE | Unsupported Request TLP exists in dual scan image processing board (Asic777) config target access | | |
| CFCCF | Poisoned TLP exists in dual scan image processing board (Asic777) config target access | | |

### 4.14.14 CFCD#

| Error code | Item | Component | Rank |
|---|---|---|---|
| CFCD0 | A "1" is set when a rising edge is detected of VD output from the dual scan image processing board (Asic777) CPS | Dual scan image processing board (DSIPB: DF-704) | C |
| CFCD1 | A "1" is set when a falling edge is detected of VD output from the dual scan image processing board (Asic777) CPS | | |
| CFCD2 | A "1" is set when a rising edge is detected of VD output from the dual scan image processing board (Asic777) DMA03 | | |
| CFCD3 | A "1" is set when a falling edge is detected of VD output from the dual scan image processing board (Asic777) DMA03 | | |
| CFCD4 | A "1" is set when a falling edge is detected of VSYNC input to the dual scan image processing board (Asic777) DMA03 | | |
| CFCD5 | Dual scan image processing board (Asic777) Emepror-IP error | | |
| CFCD6 | Dual scan image processing board (Asic777) external bus error | | |
| CFCD7 | Dual scan image processing board (Asic777) PC delay interrupt (INT_PCD0) | | |
| CFCD8 | Dual scan image processing board (Asic777) PC delay interrupt (INT_PCD1) | | |
| CFCD9 | Dual scan image processing board (Asic777) PC delay interrupt (INT_PCD2) | | |
| CFCDA | Dual scan image processing board (Asic30) image input interface had overflow | | |
| CFCDB | Dual scan image processing board (Asic30) JBIG core detected unknown marker | | |
| CFCDC | Dual scan image processing board (Asic30) JBIG core detected SC count overflow | | |
| CFCDD | SDTMDT is accessed during dual scan image processing board (Asic30) soft reset active | | |
| CFCDE | EmperorIP is accessed during dual scan image processing board (Asic30) soft reset active | | |
| CFCDF | Dual scan image processing board (Asic30) SDTMDT had a timeout error | | |

### 4.14.15 CFCE#

| Error code | Item | Component | Rank |
|---|---|---|---|
| CFCE0 | Completer Abort exists in dual scan image processing board (Asic30) memory master access | • MFP board (MFPB)<br>• Dual scan image processing board (DSIPB: DF-704) | C |
| CFCE1 | supported Request exists in dual scan image processing board (Asic30) memory master access | | |
| CFCE2 | Completion Timeout exists in dual scan image processing board (Asic30) memory master access | | |
| CFCE3 | Poisoned TLP exists in dual scan image processing board (Asic30) memory master access | | |
| CFCE4 | Unsupported Request exists in dual scan image processing board (Asic30) memory target access | | |
| CFCE5 | Poisoned TLP exists in dual scan image processing board (Asic30) memory target access | | |
| CFCE6 | Unsupported Request TLP exists in dual scan image processing board (Asic30) config target access | | |
| CFCE7 | Poisoned TLP exists in dual scan image processing board (Asic30) config target access | | |
| CFCE8 | Dual scan image processing board (Asic30) Emepror-IP error | | |
| CFCEC | Asic (PMS) DMA03 error interruption | | |

### 4.14.16 CFCF#

| Error code | Item | Component | Rank |
|---|---|---|---|
| CFCF0 | Asic (PMS) DMA07 error interruption | MFP board (MFPB) | C |
| CFCFB | Asic (PMS) DMA18 error interruption | | |
| CFCFC | Asic (PMS) DMA19 error interruption | | |
| CFCFD | Asic (PMS) DMA32 error interruption | | |
| CFCFE | Asic (PMS) DMA33 error interruption | | |
| CFCFF | Asic (PMS) DMA34 error interruption | | |

## 4.15 CFD##

### 4.15.1 CFD0#

| Error code | Item | Component | Rank |
|---|---|---|---|
| CFD00 | Asic (PMS) DMA35 error interruption | MFP board (MFPB) | C |
| CFD01 | Asic (PMS) DMA36 error interruption | | |
| CFD02 | Asic (PMS) DMA37 error interruption | | |
| CFD03 | Asic (PMS) DMA38 error interruption | | |
| CFD04 | Asic (PMS) DMA39 error interruption | | |
| CFD05 | Asic (PMS) DMA40 error interruption | | |
| CFD06 | Asic (PMS) DMA41 error interruption | | |
| CFD07 | Asic (PMS) DMA42 error interruption | | |
| CFD08 | Asic (PMS) DMA43 error interruption | | |
| CFD09 | Asic (PMS) watchdog timer error interruption | | |
| CFD0A | Asic (PMS) image output interface had underrun | | |
| CFD0B | Asic (PMS) JBIG core detected unknown marker | | |
| CFD0C | Asic (PMS) JBIG core detected SC count overflow | | |
| CFD0D | SDTMDT is accessed during Asic (PMS) soft reset active | | |
| CFD0E | Asic (PMS) SDTMDT had a timeout error | | |
| CFD0F | Completer Abort exists in Asic (PMS) memory master access | | |

### 4.15.2 CFD1#

| Error code | Item | Component | Rank |
|---|---|---|---|
| CFD10 | Unsupported Request exists in Asic (PMS) memory master access | • MFP board (MFPB)<br>• EFI relay board (VI-508) | C |
| CFD11 | Completion Timeout exists in Asic (PMS) memory master access | | |
| CFD12 | Poisoned TLP exists in Asic (PMS) memory master access | | |
| CFD13 | Unsupported Request exists in Asic (PMS) memory target access | | |
| CFD14 | Poisoned TLP exists in Asic (PMS) memory target access | | |
| CFD15 | Unsupported Request TLP exists in Asic (PMS) config target access | | |
| CFD16 | Unsupported Poisoned TLP exists in Asic (PMS) config target access | | |
| CFD17 | Asic (PMS) external bus error | | |

| Error code | Item | Component | Rank |
|---|---|---|---|
| CFD18 | EEI relay board (second Asic30) DMA00 error interruption | | |
| CFD19 | EFI relay board (second Asic30) DMA01 error interruption | | |
| CFD1A | EFI relay board (second Asic30) DMA02 error interruption | | |
| CFD1B | EFI relay board (second Asic30) DMA03 error interruption | | |
| CFD1C | EFI relay board (second Asic30) DMA04 error interruption | | |
| CFD1D | EFI relay board (second Asic30) DMA05 error interruption | | |
| CFD1E | EFI relay board (second Asic30) DMA06 error interruption | | |
| CFD1F | EFI relay board (second Asic30) DMA07 error interruption | | |

### 4.15.3 CFD2#

| Error code | Item | Component | Rank |
|---|---|---|---|
| CFD20 | EFI relay board (second Asic30) DMA08 error interruption | EFI relay board (VI-508) | C |
| CFD21 | EFI relay board (second Asic30) DMA09 error interruption | | |
| CFD22 | EFI relay board (second Asic30) DMA10 error interruption | | |
| CFD23 | EFI relay board (second Asic30) DMA11 error interruption | | |
| CFD24 | EFI relay board (second Asic30) DMA12 error interruption | | |
| CFD25 | EFI relay board (second Asic30) DMA13 error interruption | | |
| CFD26 | EFI relay board (second Asic30) DMA14 error interruption | | |
| CFD27 | EFI relay board (second Asic30) DMA15 error interruption | | |
| CFD28 | EFI relay board (second Asic30) DMA16 error interruption | | |
| CFD29 | EFI relay board (second Asic30) DMA17 error interruption | | |
| CFD2A | EFI relay board (second Asic30) DMA18 error interruption | | |
| CFD2B | EFI relay board (second Asic30) DMA19 error interruption | | |
| CFD2C | EFI relay board (second Asic30) DMA20 error interruption | | |
| CFD2D | EFI relay board (second Asic30) DMA21 error interruption | | |
| CFD2E | EFI relay board (second Asic30) DMA22 error interruption | | |
| CFD2F | EFI relay board (second Asic30) DMA23 error interruption | | |

### 4.15.4 CFD3#

| Error code | Item | Component | Rank |
|---|---|---|---|
| CFD30 | EFI relay board (second Asic30) DMA24 error interruption | EFI relay board (VI-508) | C |
| CFD31 | EFI relay board (second Asic30) DMA25 error interruption | | |
| CFD32 | EFI relay board (second Asic30) DMA26 error interruption | | |
| CFD33 | EFI relay board (second Asic30) DMA27 error interruption | | |
| CFD34 | EFI relay board (second Asic30) DMA28 error interruption | | |
| CFD35 | EFI relay board (second Asic30) DMA29 error interruption | | |
| CFD36 | EEI relay board (second Asic30) DMA30 error interruption | | |
| CFD37 | EEI relay board (second Asic30) DMA31 error interruption | | |
| CFD38 | EFI relay board (second Asic30) image input interface had overflow | | |
| CFD39 | EFI relay board (second Asic30) JBIG core detected unknown marker | | |
| CFD3A | EFI relay board (second Asic30) JBIG core detected SC count overflow | | |
| CFD3B | SDTMDT is accessed during EFI relay board (second Asic30) soft reset active | | |
| CFD3C | EmperorIP is accessed during EFI relay board (second Asic30) soft reset active | | |
| CFD3D | EFI relay board (second Asic30) SDTMDT had a timeout error | | |
| CFD3E | Completer Abort exists in EFI relay board (second Asic30) memory master access | | |
| CFD3F | supported Request exists in EFI relay board (second Asic30) memory master access | | |

### 4.15.5 CFD4#

| Error code | Item | Component | Rank |
|---|---|---|---|
| CFD40 | Completion Timeout exists in EFI relay board (second Asic30) memory master access | • EFI relay board (VI-508)<br>• Dual scan image processing board (DSIPB: DF-704) | C |
| CFD41 | Poisoned TLP exists in EFI relay board (second Asic30) memory master access | | |

| Error code | Item | Component | Rank |
|---|---|---|---|
| CFD42 | Unsupported Request exists in EFI relay board (second Asic30) memory target access | | |
| CFD43 | Poisoned TLP exists in EFI relay board (second Asic30) memory target access | | |
| CFD44 | Unsupported Request TLP exists in EFI relay board (second Asic30) config target access | | |
| CFD45 | Poisoned TLP exists in EFI relay board (second Asic30) config target access | | |
| CFD46 | EFI relay board (second Asic30) Emepror-IP error | | |
| CFD47 | Dual scan image processing board JPEG DMA_A error interruption | | |
| CFD48 | Dual scan image processing board JPEG DMA_C error interruption | | |
| CFD49 | Dual scan image processing board JPEG DMA_D error interruption | | |
| CFD4A | Dual scan image processing board JPEG watchdog timer error | | |
| CFD4B | Dual scan image processing board JPEG PCI slave error | | |
| CFD4C | Dual scan image processing board JPEG, JPEG related interruption during internal processing at DMA_A | | |
| CFD4D | Dual scan image processing board JPEG, JPEG related interruption during internal processing at DMA_A | | |
| CFD4E | Dual scan image processing board JPEG, JPEG related interruption during internal processing at DMA_A | | |
| CFD4F | Dual scan image processing board JPEG, JPEG related interruption during internal processing at DMA_A | | |

### 4.15.6 CFD5#

| Error code | Item | Component | Rank |
|---|---|---|---|
| CFD50 | Dual scan image processing board JPEG, JPEG related interruption during internal processing at DMA_A | Dual scan image processing board (DSIPB: DF-704) | C |
| CFD51 | Dual scan image processing board JPEG, JPEG related interruption during internal processing at DMA_A | | |
| CFD52 | Dual scan image processing board JPEG, JPEG related interruption during internal processing at DMA_A | | |
| CFD53 | Dual scan image processing board JPEG, JPEG related interruption during internal processing at DMA_A | | |
| CFD54 | Dual scan image processing board JPEG, JPEG related interruption during internal processing at DMA_A | | |
| CFD55 | Dual scan image processing board JPEG, JPEG related interruption with multiple statuses during internal processing at DMA_A | | |
| CFD56 | Dual scan image processing board JPEG no EOI marker after the completion of transmitting the amount of codes set during expansion at DMA_A | | |
| CFD57 | Dual scan image processing board JPEG compressed data go beyond the set value during compression at DMA_A | | |
| CFD58 | Dual scan image processing board JPEG no EOI marker after the completion of transmitting the amount of codes set during compression at DMA_A | | |
| CFD59 | Dual scan image processing board JPEG target abort | | |
| CFD5A | Dual scan image processing board JPEG master abort | | |
| CFD5B | Dual scan image processing board JPEG forced suspension | | |
| CFD5C | Dual scan image processing board JPEG PCI master detects retry error | | |
| CFD5D | Dual scan image processing board JPEG master read data parity error | | |
| CFD5E | Dual scan image processing board JPEG master write data parity error | | |
| CFD5F | Dual scan image processing board JPEG system error | | |

### 4.15.7 CFD6#

| Error code | Item | Component | Rank |
|---|---|---|---|
| CFD60 | Dual scan image processing board JPEG slave read data parity error occurred | • MFP board (MFPB)<br>• Dual scan image processing board (DSIPB: DF-704) | C |
| CFD61 | Dual scan image processing board JPEG slave write data parity error occurred | | |
| CFD62 | Dual scan image processing board JPEG address parity error occurred | | |

| Error code | Item | Component | Rank |
|---|---|---|---|
| CFD63 | CPS2007 PCI slave ileagal access error occurred | | |
| CFD64 | CPS2007 watchdog timer error occurred | | |
| CFD65 | CPS2007 address parity error occurred | | |
| CFD66 | CPS2007 slave write data parity error occurred | | |
| CFD67 | CPS2007 slave read data parity error occurred | | |
| CFD68 | ASIC777 DMA00 time out | | |
| CFD69 | ASIC777 DMA01 time out | | |
| CFD6A | ASIC777 DMA02 time out | | |
| CFD6B | ASIC777 DMA03 time out | | |
| CFD6C | ASIC777 DMA04 time out | | |
| CFD6D | ASIC777 DMA05 time out | | |
| CFD6E | ASIC777 DMA06 time out | | |
| CFD6F | ASIC777 DMA07 time out | | |

### 4.15.8 CFD7#

| Error code | Item | Component | Rank |
|---|---|---|---|
| CFD70 | ASIC777 DMA08 time out | MFP board (MFPB) | C |
| CFD71 | ASIC777 DMA09 time out | | |
| CFD72 | ASIC777 DMA10 time out | | |
| CFD73 | ASIC777 DMA11 time out | | |
| CFD74 | ASIC777 DMA12 time out | | |
| CFD75 | ASIC777 DMA13 time out | | |
| CFD76 | ASIC777 DMA14 time out | | |
| CFD77 | ASIC777 DMA15 time out | | |
| CFD78 | ASIC777 DMA16 time out | | |
| CFD79 | ASIC777 DMA17 time out | | |
| CFD7A | ASIC777 DMA18 time out | | |
| CFD7B | ASIC777 DMA19 time out | | |
| CFD7C | ASIC777 DMA20 time out | | |
| CFD7D | ASIC777 DMA21 time out | | |
| CFD7E | ASIC777 DMA22 time out | | |
| CFD7F | ASIC777 DMA23 time out | | |

### 4.15.9 CFD8#

| Error code | Item | Component | Rank |
|---|---|---|---|
| CFD80 | ASIC777 DMA24 time out | MFP board (MFPB) | C |
| CFD81 | ASIC777 DMA25 time out | | |
| CFD82 | ASIC777 DMA26 time out | | |
| CFD83 | ASIC777 DMA27 time out | | |
| CFD84 | ASIC777 DMA28 time out | | |
| CFD85 | ASIC777 DMA29 time out | | |
| CFD86 | ASIC777 DMA30 time out | | |
| CFD87 | ASIC777 DMA31 time out | | |
| CFD88 | ASIC777 DMA32 time out | | |
| CFD89 | ASIC777 DMA33 time out | | |
| CFD8A | ASIC777 DMA34 time out | | |
| CFD8B | ASIC777 DMA35 time out | | |
| CFD8C | ASIC777 DMA36 time out | | |
| CFD8D | ASIC777 DMA37 time out | | |
| CFD8E | ASIC777 DMA38 time out | | |
| CFD8F | ASIC777 DMA39 time out | | |

### 4.15.10 CFD9#

| Error code | Item | Component | Rank |
|---|---|---|---|
| CFD90 | ASIC777 DMA40 time out | MFP board (MFPB) | C |
| CFD91 | ASIC777 DMA41 time out | | |
| CFD92 | ASIC777 DMA42 time out | | |

| Error code | Item | Component | Rank |
|---|---|---|---|
| CFD93 | ASIC777 DMA43 time out | | |
| CFD94 | ASIC777 DMA44 time out | | |
| CFD95 | ASIC777 DMA45 time out | | |
| CFD96 | ASIC777 DMA46 time out | | |
| CFD97 | ASIC777 DMA47 time out | | |
| CFD98 | ASIC777 DMA48 time out | | |
| CFD99 | ASIC777 DMA49 time out | | |
| CFD9A | ASIC777 DMA50 time out | | |
| CFD9B | ASIC777 DMA51 time out | | |
| CFD9C | ASIC777 DMA52 time out | | |
| CFD9D | ASIC777 DMA53 time out | | |
| CFD9E | ASIC777 DMA54 time out | | |
| CFD9F | ASIC777 DMA55 time out | | |

### 4.15.11 CFDA#

| Error code | Item | Component | Rank |
|---|---|---|---|
| CFDA0 | EFI relay board (Asic30) DMA00 time out | EFI relay board (VI-508) | C |
| CFDA1 | EFI relay board (Asic30) DMA01 time out | | |
| CFDA2 | EFI relay board (Asic30) DMA02 time out | | |
| CFDA3 | EFI relay board (Asic30) DMA03 time out | | |
| CFDA4 | EFI relay board (Asic30) DMA04 time out | | |
| CFDA5 | EFI relay board (Asic30) DMA05 time out | | |
| CFDA6 | EFI relay board (Asic30) DMA06 time out | | |
| CFDA7 | EFI relay board (Asic30) DMA07 time out | | |
| CFDA8 | EFI relay board (Asic30) DMA08 time out | | |
| CFDA9 | EFI relay board (Asic30) DMA09 time out | | |
| CFDAA | EFI relay board (Asic30) DMA10 time out | | |
| CFDAB | EFI relay board (Asic30) DMA11 time out | | |
| CFDAC | EFI relay board (Asic30) DMA12 time out | | |
| CFDAD | EFI relay board (Asic30) DMA13 time out | | |
| CFDAE | EFI relay board (Asic30) DMA14 time out | | |
| CFDAF | EFI relay board (Asic30) DMA15 time out | | |

### 4.15.12 CFDB#

| Error code | Item | Component | Rank |
|---|---|---|---|
| CFDB0 | EFI relay board (Asic30) DMA16 time out | EFI relay board (VI-508) | C |
| CFDB1 | EFI relay board (Asic30) DMA17 time out | | |
| CFDB2 | EFI relay board (Asic30) DMA18 time out | | |
| CFDB3 | EFI relay board (Asic30) DMA19 time out | | |
| CFDB4 | EFI relay board (Asic30) DMA20 time out | | |
| CFDB5 | EFI relay board (Asic30) DMA21 time out | | |
| CFDB6 | EFI relay board (Asic30) DMA22 time out | | |
| CFDB7 | EFI relay board (Asic30) DMA23 time out | | |
| CFDB8 | EFI relay board (Asic30) DMA24 time out | | |
| CFDB9 | EFI relay board (Asic30) DMA25 time out | | |
| CFDBA | EFI relay board (Asic30) DMA26 time out | | |
| CFDBB | EFI relay board (Asic30) DMA27 time out | | |
| CFDBC | EFI relay board (Asic30) DMA28 time out | | |
| CFDBD | EFI relay board (Asic30) DMA29 time out | | |
| CFDBE | EFI relay board (Asic30) DMA30 time out | | |
| CFDBF | EFI relay board (Asic30) DMA31 time out | | |

### 4.15.13 CFDC#

| Error code | Item | Component | Rank |
|---|---|---|---|
| CFDC0 | Dual scan image processing board (Asic30/Asic777) DMA00 time out | Dual scan image processing board (DSIPB: DF-704) | C |
| CFDC1 | Dual scan image processing board (Asic30/Asic777) DMA01 time out | | |
| CFDC2 | Dual scan image processing board (Asic30/Asic777) DMA02 time out | | |

| Error code | Item | Component | Rank |
|---|---|---|---|
| CFDC3 | Dual scan image processing board (Asic30/Asic777) DMA03 time out | | |
| CFDC4 | Dual scan image processing board (Asic30/Asic777) DMA04 time out | | |
| CFDC5 | Dual scan image processing board (Asic30/Asic777) DMA05 time out | | |
| CFDC6 | Dual scan image processing board (Asic30/Asic777) DMA06 time out | | |
| CFDC7 | Dual scan image processing board (Asic30/Asic777) DMA07 time out | | |
| CFDC8 | Dual scan image processing board (Asic30/Asic777) DMA08 time out | | |
| CFDC9 | Dual scan image processing board (Asic30/Asic777) DMA09 time out | | |
| CFDCA | Dual scan image processing board (Asic30/Asic777) DMA10 time out | | |
| CFDCB | Dual scan image processing board (Asic30/Asic777) DMA11 time out | | |
| CFDCC | Dual scan image processing board (Asic30/Asic777) DMA12 time out | | |
| CFDCD | Dual scan image processing board (Asic30/Asic777) DMA13 time out | | |
| CFDCE | Dual scan image processing board (Asic30/Asic777) DMA14 time out | | |
| CFDCF | Dual scan image processing board (Asic30/Asic777) DMA15 time out | | |

### 4.15.14 CFDD#

| Error code | Item | Component | Rank |
|---|---|---|---|
| CFDD0 | Dual scan image processing board (Asic30/Asic777) DMA16 time out | Dual scan image processing board (DSIPB: DF-704) | C |
| CFDD1 | Dual scan image processing board (Asic30/Asic777) DMA17 time out | | |
| CFDD2 | Dual scan image processing board (Asic30/Asic777) DMA18 time out | | |
| CFDD3 | Dual scan image processing board (Asic30/Asic777) DMA19 time out | | |
| CFDD4 | Dual scan image processing board (Asic30/Asic777) DMA20 time out | | |
| CFDD5 | Dual scan image processing board (Asic30/Asic777) DMA21 time out | | |
| CFDD6 | Dual scan image processing board (Asic30/Asic777) DMA22 time out | | |
| CFDD7 | Dual scan image processing board (Asic30/Asic777) DMA23 time out | | |
| CFDD8 | Dual scan image processing board (Asic30/Asic777) DMA24 time out | | |
| CFDD9 | Dual scan image processing board (Asic30/Asic777) DMA25 time out | | |
| CFDDA | Dual scan image processing board (Asic30/Asic777) DMA26 time out | | |
| CFDDB | Dual scan image processing board (Asic30/Asic777) DMA27 time out | | |
| CFDDC | Dual scan image processing board (Asic30/Asic777) DMA28 time out | | |
| CFDDD | Dual scan image processing board (Asic30/Asic777) DMA29 time out | | |
| CFDDE | Dual scan image processing board (Asic30/Asic777) DMA30 time out | | |
| CFDDF | Dual scan image processing board (Asic30/Asic777) DMA31 time out | | |

### 4.15.15 CFDE#

| Error code | Item | Component | Rank |
|---|---|---|---|
| CFDE0 | Dual scan image processing board (Asic777) DMA32 time out | Dual scan image processing board (DSIPB: DF-704) | C |
| CFDE1 | Dual scan image processing board (Asic777) DMA33 time out | | |
| CFDE2 | Dual scan image processing board (Asic777) DMA34 time out | | |
| CFDE3 | Dual scan image processing board (Asic777) DMA35 time out | | |
| CFDE4 | Dual scan image processing board (Asic777) DMA36 time out | | |
| CFDE5 | Dual scan image processing board (Asic777) DMA37 time out | | |
| CFDE6 | Dual scan image processing board (Asic777) DMA38 time out | | |
| CFDE7 | Dual scan image processing board (Asic777) DMA39 time out | | |
| CFDE8 | Dual scan image processing board (Asic777) DMA40 time out | | |
| CFDE9 | Dual scan image processing board (Asic777) DMA41 time out | | |
| CFDEA | Dual scan image processing board (Asic777) DMA42 time out | | |
| CFDEB | Dual scan image processing board (Asic777) DMA43 time out | | |
| CFDEC | Dual scan image processing board (Asic777) DMA44 time out | | |
| CFDED | Dual scan image processing board (Asic777) DMA45 time out | | |
| CFDEE | Dual scan image processing board (Asic777) DMA46 time out | | |
| CFDEF | Dual scan image processing board (Asic777) DMA47 time out | | |

### 4.15.16 CFDF#

| Error code | Item | Component | Rank |
|---|---|---|---|
| CFDF0 | Dual scan image processing board (Asic777) DMA48 time out | • MFP board (MFPB)<br>• Dual scan image processing board (DSIPB: DF-704) | C |
| CFDF1 | Dual scan image processing board (Asic777) DMA49 time out | | |
| CFDF2 | Dual scan image processing board (Asic777) DMA50 time out | | |

| Error code | Item | Component | Rank |
|---|---|---|---|
| CFDF3 | Dual scan image processing board (Asic777) DMA51 time out | | |
| CFDF4 | Dual scan image processing board (Asic777) DMA52 time out | | |
| CFDF5 | Dual scan image processing board (Asic777) DMA53 time out | | |
| CFDF6 | Dual scan image processing board (Asic777) DMA54 time out | | |
| CFDF7 | Dual scan image processing board (Asic777) DMA55 time out | | |
| CFDFB | Asic (PMS) DMA03 time out | | |
| CFDFF | Asic (PMS) DMA07 time out | | |

## 4.16 CFE##

### 4.16.1 CFE0#

| Error code | Item | Component | Rank |
|---|---|---|---|
| CFE0A | Asic (PMS) DMA18 time out | MFP board (MFPB) | C |
| CFE0B | Asic (PMS) DMA19 time out | | |
| CFE0C | Asic (PMS) DMA32 time out | | |
| CFE0D | Asic (PMS) DMA33 time out | | |
| CFE0E | Asic (PMS) DMA34 time out | | |
| CFE0F | Asic (PMS) DMA35 time out | | |

### 4.16.2 CFE1#

| Error code | Item | Component | Rank |
|---|---|---|---|
| CFE10 | Asic (PMS) DMA36 time out | • MFP board (MFPB)<br>• EFI relay board (VI-508) | C |
| CFE11 | Asic (PMS) DMA37 time out | | |
| CFE12 | Asic (PMS) DMA38 time out | | |
| CFE13 | Asic (PMS) DMA39 time out | | |
| CFE14 | Asic (PMS) DMA40 time out | | |
| CFE15 | Asic (PMS) DMA41 time out | | |
| CFE16 | Asic (PMS) DMA42 time out | | |
| CFE17 | Asic (PMS) DMA43 time out | | |
| CFE18 | EFI relay board (second Asic30) DMA00 time out | | |
| CFE19 | EFI relay board (second Asic30) DMA01 time out | | |
| CFE1A | EFI relay board (second Asic30) DMA02 time out | | |
| CFE1B | EFI relay board (second Asic30) DMA03 time out | | |
| CFE1C | EFI relay board (second Asic30) DMA04 time out | | |
| CFE1D | EFI relay board (second Asic30) DMA05 time out | | |
| CFE1E | EFI relay board (second Asic30) DMA06 time out | | |
| CFE1F | EFI relay board (second Asic30) DMA07 time out | | |

### 4.16.3 CFE2#

| Error code | Item | Component | Rank |
|---|---|---|---|
| CFE20 | EFI relay board (second Asic30) DMA08 time out | EFI relay board (VI-508) | C |
| CFE21 | EFI relay board (second Asic30) DMA09 time out | | |
| CFE22 | EFI relay board (second Asic30) DMA10 time out | | |
| CFE23 | EFI relay board (second Asic30) DMA11 time out | | |
| CFE24 | EFI relay board (second Asic30) DMA12 time out | | |
| CFE25 | EFI relay board (second Asic30) DMA13 time out | | |
| CFE26 | EFI relay board (second Asic30) DMA14 time out | | |
| CFE27 | EFI relay board (second Asic30) DMA15 time out | | |
| CFE28 | EFI relay board (second Asic30) DMA16 time out | | |
| CFE29 | EFI relay board (second Asic30) DMA17 time out | | |
| CFE2A | EFI relay board (second Asic30) DMA18 time out | | |
| CFE2B | EFI relay board (second Asic30) DMA19 time out | | |
| CFE2C | EFI relay board (second Asic30) DMA20 time out | | |
| CFE2D | EFI relay board (second Asic30) DMA21 time out | | |
| CFE2E | EFI relay board (second Asic30) DMA22 time out | | |
| CFE2F | EFI relay board (second Asic30) DMA23 time out | | |

### 4.16.4 CFE3#

| Error code | Item | Component | Rank |
|---|---|---|---|
| CFE30 | EFI relay board (second Asic30) DMA24 time out | • MFP board (MFPB)<br>• EFI relay board (VI-508) | C |
| CFE31 | EFI relay board (second Asic30) DMA25 time out | | |
| CFE32 | EFI relay board (second Asic30) DMA26 time out | | |
| CFE33 | EFI relay board (second Asic30) DMA27 time out | | |
| CFE34 | EFI relay board (second Asic30) DMA28 time out | | |
| CFE35 | EFI relay board (second Asic30) DMA29 time out | | |
| CFE36 | EFI relay board (second Asic30) DMA30 time out | | |
| CFE37 | EFI relay board (second Asic30) DMA31 time out | | |
| CFE38 | Dual scan image processing board JPEG DMA_A time out | | |
| CFE39 | Dual scan image processing board JPEG DMA_C time out | | |
| CFE3A | Dual scan image processing board JPEG DMA_D time out | | |
| CFE3B | ASIC777 DMA00 time out | | |
| CFE3C | ASIC777 DMA01 time out | | |
| CFE3D | ASIC777 DMA02 time out | | |
| CFE3E | ASIC777 DMA03 time out | | |
| CFE3F | ASIC777 DMA04 time out | | |

### 4.16.5 CFE4#

| Error code | Item | Component | Rank |
|---|---|---|---|
| CFE40 | ASIC777 DMA05 time out | MFP board (MFPB) | C |
| CFE41 | ASIC777 DMA06 time out | | |
| CFE42 | ASIC777 DMA07 time out | | |
| CFE43 | ASIC777 DMA08 time out | | |
| CFE44 | ASIC777 DMA09 time out | | |
| CFE45 | ASIC777 DMA10 time out | | |
| CFE46 | ASIC777 DMA11 time out | | |
| CFE47 | ASIC777 DMA12 time out | | |
| CFE48 | ASIC777 DMA13 time out | | |
| CFE49 | ASIC777 DMA14 time out | | |
| CFE4A | ASIC777 DMA15 time out | | |
| CFE4B | ASIC777 DMA16 time out | | |
| CFE4C | ASIC777 DMA17 time out | | |
| CFE4D | ASIC777 DMA18 time out | | |
| CFE4E | ASIC777 DMA19 time out | | |
| CFE4F | ASIC777 DMA20 time out | | |

### 4.16.6 CFE5#

| Error code | Item | Component | Rank |
|---|---|---|---|
| CFE50 | ASIC777 DMA21 time out | MFP board (MFPB) | C |
| CFE51 | ASIC777 DMA22 time out | | |
| CFE52 | ASIC777 DMA23 time out | | |
| CFE53 | ASIC777 DMA24 time out | | |
| CFE54 | ASIC777 DMA25 time out | | |
| CFE55 | ASIC777 DMA26 time out | | |
| CFE56 | ASIC777 DMA27 time out | | |
| CFE57 | ASIC777 DMA28 time out | | |
| CFE58 | ASIC777 DMA29 time out | | |
| CFE59 | ASIC777 DMA30 time out | | |
| CFE5A | ASIC777 DMA31 time out | | |
| CFE5B | ASIC777 DMA32 time out | | |
| CFE5C | ASIC777 DMA33 time out | | |
| CFE5D | ASIC777 DMA34 time out | | |
| CFE5E | ASIC777 DMA35 time out | | |
| CFE5F | ASIC777 DMA36 time out | | |

### 4.16.7 CFE6#

| Error code | Item | Component | Rank |
|---|---|---|---|
| CFE60 | ASIC777 DMA37 time out | MFP board (MFPB) | C |
| CFE61 | ASIC777 DMA38 time out | | |
| CFE62 | ASIC777 DMA39 time out | | |
| CFE63 | ASIC777 DMA40 time out | | |
| CFE64 | ASIC777 DMA41 time out | | |
| CFE65 | ASIC777 DMA42 time out | | |
| CFE66 | ASIC777 DMA43 time out | | |
| CFE67 | ASIC777 DMA44 time out | | |
| CFE68 | ASIC777 DMA45 time out | | |
| CFE69 | ASIC777 DMA46 time out | | |
| CFE6A | ASIC777 DMA47 time out | | |
| CFE6B | ASIC777 DMA48 time out | | |
| CFE6C | ASIC777 DMA49 time out | | |
| CFE6D | ASIC777 DMA50 time out | | |
| CFE6E | ASIC777 DMA51 time out | | |
| CFE6F | ASIC777 DMA52 time out | | |

### 4.16.8 CFE7#

| Error code | Item | Component | Rank |
|---|---|---|---|
| CFE70 | ASIC777 DMA53 time out | • MFP board (MFPB)<br>• EFI relay board (VI-508) | C |
| CFE71 | ASIC777 DMA54 time out | | |
| CFE72 | ASIC777 DMA55 time out | | |
| CFE73 | EFI relay board (Asic30) DMA00 time out | | |
| CFE74 | EFI relay board (Asic30) DMA01 time out | | |
| CFE75 | EFI relay board (Asic30) DMA02 time out | | |
| CFE76 | EFI relay board (Asic30) DMA03 time out | | |
| CFE77 | EFI relay board (Asic30) DMA04 time out | | |
| CFE78 | EFI relay board (Asic30) DMA05 time out | | |
| CFE79 | EFI relay board (Asic30) DMA06 time out | | |
| CFE7A | EFI relay board (Asic30) DMA07 time out | | |
| CFE7B | EFI relay board (Asic30) DMA08 time out | | |
| CFE7C | EFI relay board (Asic30) DMA09 time out | | |
| CFE7D | EFI relay board (Asic30) DMA10 time out | | |
| CFE7E | EFI relay board (Asic30) DMA11 time out | | |
| CFE7F | EFI relay board (Asic30) DMA12 time out | | |

### 4.16.9 CFE8#

| Error code | Item | Component | Rank |
|---|---|---|---|
| CFE80 | EFI relay board (Asic30) DMA13 time out | EFI relay board (VI-508) | C |
| CFE81 | EFI relay board (Asic30) DMA14 time out | | |
| CFE82 | EFI relay board (Asic30) DMA15 time out | | |
| CFE83 | EFI relay board (Asic30) DMA16 time out | | |
| CFE84 | EFI relay board (Asic30) DMA17 time out | | |
| CFE85 | EFI relay board (Asic30) DMA18 time out | | |
| CFE86 | EFI relay board (Asic30) DMA19 time out | | |
| CFE87 | EFI relay board (Asic30) DMA20 time out | | |
| CFE88 | EFI relay board (Asic30) DMA21 time out | | |
| CFE89 | EFI relay board (Asic30) DMA22 time out | | |
| CFE8A | EFI relay board (Asic30) DMA23 time out | | |
| CFE8B | EFI relay board (Asic30) DMA24 time out | | |
| CFE8C | EFI relay board (Asic30) DMA25 time out | | |
| CFE8D | EFI relay board (Asic30) DMA26 time out | | |
| CFE8E | EFI relay board (Asic30) DMA27 time out | | |
| CFE8F | EFI relay board (Asic30) DMA28 time out | | |

### 4.16.10 CFE9#

| Error code | Item | Component | Rank |
|---|---|---|---|
| CFE90 | EFI relay board (Asic30) DMA29 time out | • EFI relay board (VI-508)<br>• Dual scan image processing board (DSIPB: DF-704) | C |
| CFE91 | EFI relay board (Asic30) DMA30 time out | | |
| CFE92 | EFI relay board (Asic30) DMA31 time out | | |
| CFE93 | Dual scan image processing board (Asic30/Asic777) DMA00 time out | | |
| CFE94 | Dual scan image processing board (Asic30/Asic777) DMA01 time out | | |
| CFE95 | Dual scan image processing board (Asic30/Asic777) DMA02 time out | | |
| CFE96 | Dual scan image processing board (Asic30/Asic777) DMA03 time out | | |
| CFE97 | Dual scan image processing board (Asic30/Asic777) DMA04 time out | | |
| CFE98 | Dual scan image processing board (Asic30/Asic777) DMA05 time out | | |
| CFE99 | Dual scan image processing board (Asic30/Asic777) DMA06 time out | | |
| CFE9A | Dual scan image processing board (Asic30/Asic777) DMA07 time out | | |
| CFE9B | Dual scan image processing board (Asic30/Asic777) DMA08 time out | | |
| CFE9C | Dual scan image processing board (Asic30/Asic777) DMA09 time out | | |
| CFE9D | Dual scan image processing board (Asic30/Asic777) DMA10 time out | | |
| CFE9E | Dual scan image processing board (Asic30/Asic777) DMA11 time out | | |
| CFE9F | Dual scan image processing board (Asic30/Asic777) DMA12 time out | | |

### 4.16.11 CFEA#

| Error code | Item | Component | Rank |
|---|---|---|---|
| CFEA0 | Dual scan image processing board (Asic30/Asic777) DMA13 time out | Dual scan image processing board (DSIPB: DF-704) | C |
| CFEA1 | Dual scan image processing board (Asic30/Asic777) DMA14 time out | | |
| CFEA2 | Dual scan image processing board (Asic30/Asic777) DMA15 time out | | |
| CFEA3 | Dual scan image processing board (Asic30/Asic777) DMA16 time out | | |
| CFEA4 | Dual scan image processing board (Asic30/Asic777) DMA17 time out | | |
| CFEA5 | Dual scan image processing board (Asic30/Asic777) DMA18 time out | | |
| CFEA6 | Dual scan image processing board (Asic30/Asic777) DMA19 time out | | |
| CFEA7 | Dual scan image processing board (Asic30/Asic777) DMA20 time out | | |
| CFEA8 | Dual scan image processing board (Asic30/Asic777) DMA21 time out | | |
| CFEA9 | Dual scan image processing board (Asic30/Asic777) DMA22 time out | | |
| CFEAA | Dual scan image processing board (Asic30/Asic777) DMA23 time out | | |
| CFEAB | Dual scan image processing board (Asic30/Asic777) DMA24 time out | | |
| CFEAC | Dual scan image processing board (Asic30/Asic777) DMA25 time out | | |
| CFEAD | Dual scan image processing board (Asic30/Asic777) DMA26 time out | | |
| CFEAE | Dual scan image processing board (Asic30/Asic777) DMA27 time out | | |
| CFEAF | Dual scan image processing board (Asic30/Asic777) DMA28 time out | | |

### 4.16.12 CFEB#

| Error code | Item | Component | Rank |
|---|---|---|---|
| CFEB0 | Dual scan image processing board (Asic30/Asic777) DMA29 time out | Dual scan image processing board (DSIPB: DF-704) | C |
| CFEB1 | Dual scan image processing board (Asic30/Asic777) DMA30 time out | | |
| CFEB2 | Dual scan image processing board (Asic30/Asic777) DMA31 time out | | |
| CFEB3 | Dual scan image processing board (Asic777) DMA32 time out | | |
| CFEB4 | Dual scan image processing board (Asic777) DMA33 time out | | |
| CFEB5 | Dual scan image processing board (Asic777) DMA34 time out | | |
| CFEB6 | Dual scan image processing board (Asic777) DMA35 time out | | |
| CFEB7 | Dual scan image processing board (Asic777) DMA36 time out | | |
| CFEB8 | Dual scan image processing board (Asic777) DMA37 time out | | |
| CFEB9 | Dual scan image processing board (Asic777) DMA38 time out | | |
| CFEBA | Dual scan image processing board (Asic777) DMA39 time out | | |
| CFEBB | Dual scan image processing board (Asic777) DMA40 time out | | |
| CFEBC | Dual scan image processing board (Asic777) DMA41 time out | | |
| CFEBD | Dual scan image processing board (Asic777) DMA42 time out | | |
| CFEBE | Dual scan image processing board (Asic777) DMA43 time out | | |
| CFEBF | Dual scan image processing board (Asic777) DMA44 time out | | |

### 4.16.13 CFEC#

| Error code | Item | Component | Rank |
|---|---|---|---|
| CFEC0 | Dual scan image processing board (Asic777) DMA45 time out | • MFP board (MFPB)<br>• Dual scan image processing board (DSIPB: DF-704) | C |
| CFEC1 | Dual scan image processing board (Asic777) DMA46 time out | | |
| CFEC2 | Dual scan image processing board (Asic777) DMA47 time out | | |
| CFEC3 | Dual scan image processing board (Asic777) DMA48 time out | | |
| CFEC4 | Dual scan image processing board (Asic777) DMA49 time out | | |
| CFEC5 | Dual scan image processing board (Asic777) DMA50 time out | | |
| CFEC6 | Dual scan image processing board (Asic777) DMA51 time out | | |
| CFEC7 | Dual scan image processing board (Asic777) DMA52 time out | | |
| CFEC8 | Dual scan image processing board (Asic777) DMA53 time out | | |
| CFEC9 | Dual scan image processing board (Asic777) DMA54 time out | | |
| CFECA | Dual scan image processing board (Asic777) DMA55 time out | | |
| CFECE | Asic (PMS) DMA03 time out | | |

### 4.16.14 CFED#

| Error code | Item | Component | Rank |
|---|---|---|---|
| CFED2 | Asic (PMS) DMA07 time out | MFP board (MFPB) | C |
| CFEDD | Asic (PMS) DMA18 time out | | |
| CFEDE | Asic (PMS) DMA19 time out | | |
| CFEDF | Asic (PMS) DMA32 time out | | |

### 4.16.15 CFEE#

| Error code | Item | Component | Rank |
|---|---|---|---|
| CFEE0 | Asic (PMS) DMA33 time out | • MFP board (MFPB)<br>• EFI relay board (VI-508) | C |
| CFEE1 | Asic (PMS) DMA34 time out | | |
| CFEE2 | Asic (PMS) DMA35 time out | | |
| CFEE3 | Asic (PMS) DMA36 time out | | |
| CFEE4 | Asic (PMS) DMA37 time out | | |
| CFEE5 | Asic (PMS) DMA38 time out | | |
| CFEE6 | Asic (PMS) DMA39 time out | | |
| CFEE7 | Asic (PMS) DMA40 time out | | |
| CFEE8 | Asic (PMS) DMA41 time out | | |
| CFEE9 | Asic (PMS) DMA42 time out | | |
| CFEEA | Asic (PMS) DMA43 time out | | |
| CFEEB | EFI relay board (second Asic30) DMA00 time out | | |
| CFEEC | EFI relay board (second Asic30) DMA01 time out | | |
| CFEED | EFI relay board (second Asic30) DMA02 time out | | |
| CFEEE | EFI relay board (second Asic30) DMA03 time out | | |
| CFEEF | EFI relay board (second Asic30) DMA04 time out | | |

### 4.16.16 CFEF#

| Error code | Item | Component | Rank |
|---|---|---|---|
| CFEF0 | EFI relay board (second Asic30) DMA05 time out | MFP board (MFPB) | C |
| CFEF1 | EFI relay board (second Asic30) DMA06 time out | | |
| CFEF2 | EFI relay board (second Asic30) DMA07 time out | | |
| CFEF3 | EFI relay board (second Asic30) DMA08 time out | | |
| CFEF4 | EFI relay board (second Asic30) DMA09 time out | | |
| CFEF5 | EFI relay board (second Asic30) DMA10 time out | | |
| CFEF6 | EFI relay board (second Asic30) DMA11 time out | | |
| CFEF7 | EFI relay board (second Asic30) DMA12 time out | | |
| CFEF8 | EFI relay board (second Asic30) DMA13 time out | | |
| CFEF9 | EFI relay board (second Asic30) DMA14 time out | | |
| CFEFA | EFI relay board (second Asic30) DMA15 time out | | |
| CFEFB | EFI relay board (second Asic30) DMA16 time out | | |
| CFEFC | EFI relay board (second Asic30) DMA17 time out | | |
| CFEFD | EFI relay board (second Asic30) DMA18 time out | | |
| CFEFE | EFI relay board (second Asic30) DMA19 time out | | |

| Error code | Item | Component | Rank |
|---|---|---|---|
| CFEFF | EFI relay board (second Asic30) DMA20 time out | | |

## 4.17 CFF##

### 4.17.1 CFF0#

| Error code | Item | Component | Rank |
|---|---|---|---|
| CFF00 | EFI relay board (second Asic30) DMA21 time out | • MFP board (MFPB)<br>• EFI relay board (VI-508)<br>• Dual scan image processing board (DSIPB: DF-704) | C |
| CFF01 | EFI relay board (second Asic30) DMA22 time out | | |
| CFF02 | EFI relay board (second Asic30) DMA23 time out | | |
| CFF03 | EFI relay board (second Asic30) DMA24 time out | | |
| CFF04 | EFI relay board (second Asic30) DMA25 time out | | |
| CFF05 | EFI relay board (second Asic30) DMA26 time out | | |
| CFF06 | EFI relay board (second Asic30) DMA27 time out | | |
| CFF07 | EFI relay board (second Asic30) DMA28 time out | | |
| CFF08 | EFI relay board (second Asic30) DMA29 time out | | |
| CFF09 | EFI relay board (second Asic30) DMA30 time out | | |
| CFF0A | EFI relay board (second Asic30) DMA31 time out | | |
| CFF0B | Dual scan image processing board JPEG DMA_A time out | | |
| CFF0C | Dual scan image processing board JPEG DMA_C time out | | |
| CFF0D | Dual scan image processing board JPEG DMA_D time out | | |
| CFF0E | ASIC777 DMA00 time out | | |
| CFF0F | ASIC777 DMA01 time out | | |

### 4.17.2 CFF1#

| Error code | Item | Component | Rank |
|---|---|---|---|
| CFF10 | ASIC777 DMA02 time out | MFP board (MFPB) | C |
| CFF11 | ASIC777 DMA03 time out | | |
| CFF12 | ASIC777 DMA04 time out | | |
| CFF13 | ASIC777 DMA05 time out | | |
| CFF14 | ASIC777 DMA06 time out | | |
| CFF15 | ASIC777 DMA07 time out | | |
| CFF16 | ASIC777 DMA08 time out | | |
| CFF17 | ASIC777 DMA09 time out | | |
| CFF18 | ASIC777 DMA10 time out | | |
| CFF19 | ASIC777 DMA11 time out | | |
| CFF1A | ASIC777 DMA12 time out | | |
| CFF1B | ASIC777 DMA13 time out | | |
| CFF1C | ASIC777 DMA14 time out | | |
| CFF1D | ASIC777 DMA15 time out | | |
| CFF1E | ASIC777 DMA16 time out | | |
| CFF1F | ASIC777 DMA17 time out | | |

### 4.17.3 CFF2#

| Error code | Item | Component | Rank |
|---|---|---|---|
| CFF20 | ASIC777 DMA18 time out | MFP board (MFPB) | C |
| CFF21 | ASIC777 DMA19 time out | | |
| CFF22 | ASIC777 DMA20 time out | | |
| CFF23 | ASIC777 DMA21 time out | | |
| CFF24 | ASIC777 DMA22 time out | | |
| CFF25 | ASIC777 DMA23 time out | | |
| CFF26 | ASIC777 DMA24 time out | | |
| CFF27 | ASIC777 DMA25 time out | | |
| CFF28 | ASIC777 DMA26 time out | | |
| CFF29 | ASIC777 DMA27 time out | | |
| CFF2A | ASIC777 DMA28 time out | | |
| CFF2B | ASIC777 DMA29 time out | | |
| CFF2C | ASIC777 DMA30 time out | | |
| CFF2D | ASIC777 DMA31 time out | | |

| Error code | Item | Component | Rank |
|---|---|---|---|
| CFF2E | ASIC777 DMA32 time out | | |
| CFF2F | ASIC777 DMA33 time out | | |

### 4.17.4 CFF3#

| Error code | Item | Component | Rank |
|---|---|---|---|
| CFF30 | ASIC777 DMA34 time out | MFP board (MFPB) | C |
| CFF31 | ASIC777 DMA35 time out | | |
| CFF32 | ASIC777 DMA36 time out | | |
| CFF33 | ASIC777 DMA37 time out | | |
| CFF34 | ASIC777 DMA38 time out | | |
| CFF35 | ASIC777 DMA39 time out | | |
| CFF36 | ASIC777 DMA40 time out | | |
| CFF37 | ASIC777 DMA41 time out | | |
| CFF38 | ASIC777 DMA42 time out | | |
| CFF39 | ASIC777 DMA43 time out | | |
| CFF3A | ASIC777 DMA44 time out | | |
| CFF3B | ASIC777 DMA45 time out | | |
| CFF3C | ASIC777 DMA46 time out | | |
| CFF3D | ASIC777 DMA47 time out | | |
| CFF3E | ASIC777 DMA48 time out | | |
| CFF3F | ASIC777 DMA49 time out | | |

### 4.17.5 CFF4#

| Error code | Item | Component | Rank |
|---|---|---|---|
| CFF40 | ASIC777 DMA50 time out | • MFP board (MFPB)<br>• EFI relay board (VI-508) | C |
| CFF41 | ASIC777 DMA51 time out | | |
| CFF42 | ASIC777 DMA52 time out | | |
| CFF43 | ASIC777 DMA53 time out | | |
| CFF44 | ASIC777 DMA54 time out | | |
| CFF45 | ASIC777 DMA55 time out | | |
| CFF46 | EFI relay board (Asic30) DMA00 time out | | |
| CFF47 | EFI relay board (Asic30) DMA01 time out | | |
| CFF48 | EFI relay board (Asic30) DMA02 time out | | |
| CFF49 | EFI relay board (Asic30) DMA03 time out | | |
| CFF4A | EFI relay board (Asic30) DMA04 time out | | |
| CFF4B | EFI relay board (Asic30) DMA05 time out | | |
| CFF4C | EFI relay board (Asic30) DMA06 time out | | |
| CFF4D | EFI relay board (Asic30) DMA07 time out | | |
| CFF4E | EFI relay board (Asic30) DMA08 time out | | |
| CFF4F | EFI relay board (Asic30) DMA09 time out | | |

### 4.17.6 CFF5#

| Error code | Item | Component | Rank |
|---|---|---|---|
| CFF50 | EFI relay board (Asic30) DMA10 time out | EFI relay board (VI-508) | C |
| CFF51 | EFI relay board (Asic30) DMA11 time out | | |
| CFF52 | EFI relay board (Asic30) DMA12 time out | | |
| CFF53 | EFI relay board (Asic30) DMA13 time out | | |
| CFF54 | EFI relay board (Asic30) DMA14 time out | | |
| CFF55 | EFI relay board (Asic30) DMA15 time out | | |
| CFF56 | EFI relay board (Asic30) DMA16 time out | | |
| CFF57 | EFI relay board (Asic30) DMA17 time out | | |
| CFF58 | EFI relay board (Asic30) DMA18 time out | | |
| CFF59 | EFI relay board (Asic30) DMA19 time out | | |
| CFF5A | EFI relay board (Asic30) DMA20 time out | | |
| CFF5B | EFI relay board (Asic30) DMA21 time out | | |
| CFF5C | EFI relay board (Asic30) DMA22 time out | | |
| CFF5D | EFI relay board (Asic30) DMA23 time out | | |

| Error code | Item | Component | Rank |
|---|---|---|---|
| CFF5E | EFI relay board (Asic30) DMA24 time out | | |
| CFF5F | EFI relay board (Asic30) DMA25 time out | | |

### 4.17.7 CFF6#

| Error code | Item | Component | Rank |
|---|---|---|---|
| CFF60 | EFI relay board (Asic30) DMA26 time out | • EFI relay board (VI-508)<br>• Dual scan image processing board (DSIPB: DF-704) | C |
| CFF61 | EFI relay board (Asic30) DMA27 time out | | |
| CFF62 | EFI relay board (Asic30) DMA28 time out | | |
| CFF63 | EFI relay board (Asic30) DMA29 time out | | |
| CFF64 | EFI relay board (Asic30) DMA30 time out | | |
| CFF65 | EFI relay board (Asic30) DMA31 time out | | |
| CFF66 | Dual scan image processing board (Asic30/Asic777) DMA00 time out | | |
| CFF67 | Dual scan image processing board (Asic30/Asic777) DMA01 time out | | |
| CFF68 | Dual scan image processing board (Asic30/Asic777) DMA02 time out | | |
| CFF69 | Dual scan image processing board (Asic30/Asic777) DMA03 time out | | |
| CFF6A | Dual scan image processing board (Asic30/Asic777) DMA04 time out | | |
| CFF6B | Dual scan image processing board (Asic30/Asic777) DMA05 time out | | |
| CFF6C | Dual scan image processing board (Asic30/Asic777) DMA06 time out | | |
| CFF6D | Dual scan image processing board (Asic30/Asic777) DMA07 time out | | |
| CFF6E | Dual scan image processing board (Asic30/Asic777) DMA08 time out | | |
| CFF6F | Dual scan image processing board (Asic30/Asic777) DMA09 time out | | |

### 4.17.8 CFF7#

| Error code | Item | Component | Rank |
|---|---|---|---|
| CFF70 | Dual scan image processing board (Asic30/Asic777) DMA10 time out | Dual scan image processing board (DSIPB: DF-704) | C |
| CFF71 | Dual scan image processing board (Asic30/Asic777) DMA11 time out | | |
| CFF72 | Dual scan image processing board (Asic30/Asic777) DMA12 time out | | |
| CFF73 | Dual scan image processing board (Asic30/Asic777) DMA13 time out | | |
| CFF74 | Dual scan image processing board (Asic30/Asic777) DMA14 time out | | |
| CFF75 | Dual scan image processing board (Asic30/Asic777) DMA15 time out | | |
| CFF76 | Dual scan image processing board (Asic30/Asic777) DMA16 time out | | |
| CFF77 | Dual scan image processing board (Asic30/Asic777) DMA17 time out | | |
| CFF78 | Dual scan image processing board (Asic30/Asic777) DMA18 time out | | |
| CFF79 | Dual scan image processing board (Asic30/Asic777) DMA19 time out | | |
| CFF7A | Dual scan image processing board (Asic30/Asic777) DMA20 time out | | |
| CFF7B | Dual scan image processing board (Asic30/Asic777) DMA21 time out | | |
| CFF7C | Dual scan image processing board (Asic30/Asic777) DMA22 time out | | |
| CFF7D | Dual scan image processing board (Asic30/Asic777) DMA23 time out | | |
| CFF7E | Dual scan image processing board (Asic30/Asic777) DMA24 time out | | |
| CFF7F | Dual scan image processing board (Asic30/Asic777) DMA25 time out | | |

### 4.17.9 CFF8#

| Error code | Item | Component | Rank |
|---|---|---|---|
| CFF80 | Dual scan image processing board (Asic30/Asic777) DMA26 time out | Dual scan image processing board (DSIPB: DF-704) | C |
| CFF81 | Dual scan image processing board (Asic30/Asic777) DMA27 time out | | |
| CFF82 | Dual scan image processing board (Asic30/Asic777) DMA28 time out | | |
| CFF83 | Dual scan image processing board (Asic30/Asic777) DMA29 time out | | |
| CFF84 | Dual scan image processing board (Asic30/Asic777) DMA30 time out | | |
| CFF85 | Dual scan image processing board (Asic30/Asic777) DMA31 time out | | |
| CFF86 | Dual scan image processing board (Asic777) DMA32 time out | | |
| CFF87 | Dual scan image processing board (Asic777) DMA33 time out | | |
| CFF88 | Dual scan image processing board (Asic777) DMA34 time out | | |
| CFF89 | Dual scan image processing board (Asic777) DMA35 time out | | |
| CFF8A | Dual scan image processing board (Asic777) DMA36 time out | | |
| CFF8B | Dual scan image processing board (Asic777) DMA37 time out | | |
| CFF8C | Dual scan image processing board (Asic777) DMA38 time out | | |
| CFF8D | Dual scan image processing board (Asic777) DMA39 time out | | |

| Error code | Item | Component | Rank |
|---|---|---|---|
| CFF8E | Dual scan image processing board (Asic777) DMA40 time out | | |
| CFF8F | Dual scan image processing board (Asic777) DMA41 time out | | |

### 4.17.10 CFF9#

| Error code | Item | Component | Rank |
|---|---|---|---|
| CFF90 | Dual scan image processing board (Asic777) DMA42 time out | Dual scan image processing board (DSIPB: DF-704) | C |
| CFF91 | Dual scan image processing board (Asic777) DMA43 time out | | |
| CFF92 | Dual scan image processing board (Asic777) DMA44 time out | | |
| CFF93 | Dual scan image processing board (Asic777) DMA45 time out | | |
| CFF94 | Dual scan image processing board (Asic777) DMA46 time out | | |
| CFF95 | Dual scan image processing board (Asic777) DMA47 time out | | |
| CFF96 | Dual scan image processing board (Asic777) DMA48 time out | | |
| CFF97 | Dual scan image processing board (Asic777) DMA49 time out | | |
| CFF98 | Dual scan image processing board (Asic777) DMA50 time out | | |
| CFF99 | Dual scan image processing board (Asic777) DMA51 time out | | |
| CFF9A | Dual scan image processing board (Asic777) DMA52 time out | | |
| CFF9B | Dual scan image processing board (Asic777) DMA53 time out | | |
| CFF9C | Dual scan image processing board (Asic777) DMA54 time out | | |
| CFF9D | Dual scan image processing board (Asic777) DMA55 time out | | |

### 4.17.11 CFFA#

| Error code | Item | Component | Rank |
|---|---|---|---|
| CFFA1 | Asic (PMS) DMA03 time out | MFP board (MFPB) | C |
| CFFA5 | Asic (PMS) DMA07 time out | | |

### 4.17.12 CFFB#

| Error code | Item | Component | Rank |
|---|---|---|---|
| CFFB0 | Asic (PMS) DMA18 time out | • MFP board (MFPB)<br>• EFI relay board (VI-508) | C |
| CFFB1 | Asic (PMS) DMA19 time out | | |
| CFFB2 | Asic (PMS) DMA32 time out | | |
| CFFB3 | Asic (PMS) DMA33 time out | | |
| CFFB4 | Asic (PMS) DMA34 time out | | |
| CFFB5 | Asic (PMS) DMA35 time out | | |
| CFFB6 | Asic (PMS) DMA36 time out | | |
| CFFB7 | Asic (PMS) DMA37 time out | | |
| CFFB8 | Asic (PMS) DMA38 time out | | |
| CFFB9 | Asic (PMS) DMA39 time out | | |
| CFFBA | Asic (PMS) DMA40 time out | | |
| CFFBB | Asic (PMS) DMA41 time out | | |
| CFFBC | Asic (PMS) DMA42 time out | | |
| CFFBD | Asic (PMS) DMA43 time out | | |
| CFFBE | EFI relay board (second Asic30) DMA00 time out | | |
| CFFBF | EFI relay board (second Asic30) DMA01 time out | | |

### 4.17.13 CFFC#

| Error code | Item | Component | Rank |
|---|---|---|---|
| CFFC0 | EFI relay board (second Asic30) DMA02 time out | EFI relay board (VI-508) | C |
| CFFC1 | EFI relay board (second Asic30) DMA03 time out | | |
| CFFC2 | EFI relay board (second Asic30) DMA04 time out | | |
| CFFC3 | EFI relay board (second Asic30) DMA05 time out | | |
| CFFC4 | EFI relay board (second Asic30) DMA06 time out | | |
| CFFC5 | EFI relay board (second Asic30) DMA07 time out | | |
| CFFC6 | EFI relay board (second Asic30) DMA08 time out | | |
| CFFC7 | EFI relay board (second Asic30) DMA09 time out | | |
| CFFC8 | EFI relay board (second Asic30) DMA10 time out | | |
| CFFC9 | EFI relay board (second Asic30) DMA11 time out | | |
| CFFCA | EFI relay board (second Asic30) DMA12 time out | | |

| Error code | Item | Component | Rank |
|---|---|---|---|
| CFFCB | EFI relay board (second Asic30) DMA13 time out | | |
| CFFCC | EFI relay board (second Asic30) DMA14 time out | | |
| CFFCD | EFI relay board (second Asic30) DMA15 time out | | |
| CFFCE | EFI relay board (second Asic30) DMA16 time out | | |
| CFFCF | EFI relay board (second Asic30) DMA17 time out | | |

### 4.17.14 CFFD#

| Error code | Item | Component | Rank |
|---|---|---|---|
| CFFD0 | EFI relay board (second Asic30) DMA18 time out | • EFI relay board (VI-508)<br>• Dual scan image processing board (DSIPB: DF-704) | C |
| CFFD1 | EFI relay board (second Asic30) DMA19 time out | | |
| CFFD2 | EFI relay board (second Asic30) DMA20 time out | | |
| CFFD3 | EFI relay board (second Asic30) DMA21 time out | | |
| CFFD4 | EFI relay board (second Asic30) DMA22 time out | | |
| CFFD5 | EFI relay board (second Asic30) DMA23 time out | | |
| CFFD6 | EFI relay board (second Asic30) DMA24 time out | | |
| CFFD7 | EFI relay board (second Asic30) DMA25 time out | | |
| CFFD8 | EFI relay board (second Asic30) DMA26 time out | | |
| CFFD9 | EFI relay board (second Asic30) DMA27 time out | | |
| CFFDA | EFI relay board (second Asic30) DMA28 time out | | |
| CFFDB | EFI relay board (second Asic30) DMA29 time out | | |
| CFFDC | EFI relay board (second Asic30) DMA30 time out | | |
| CFFDD | EFI relay board (second Asic30) DMA31 time out | | |
| CFFDE | Dual scan image processing board JPEG DMA_A time out | | |
| CFFDF | Dual scan image processing board JPEG DMA_C time out | | |

### 4.17.15 CFFE#

| Error code | Item | Component | Rank |
|---|---|---|---|
| CFFE0 | Dual scan image processing board JPEG DMA_D time out | Dual scan image processing board (DSIPB: DF-704) | C |

# 5. ERROR CODE FOR THE INTERNET ISW

## 5.1 Error code list for the Internet ISW

- When a trouble occurred while conducting the Internet ISW and it was not normally connected, the message on the status and the error code will be displayed on the control panel.

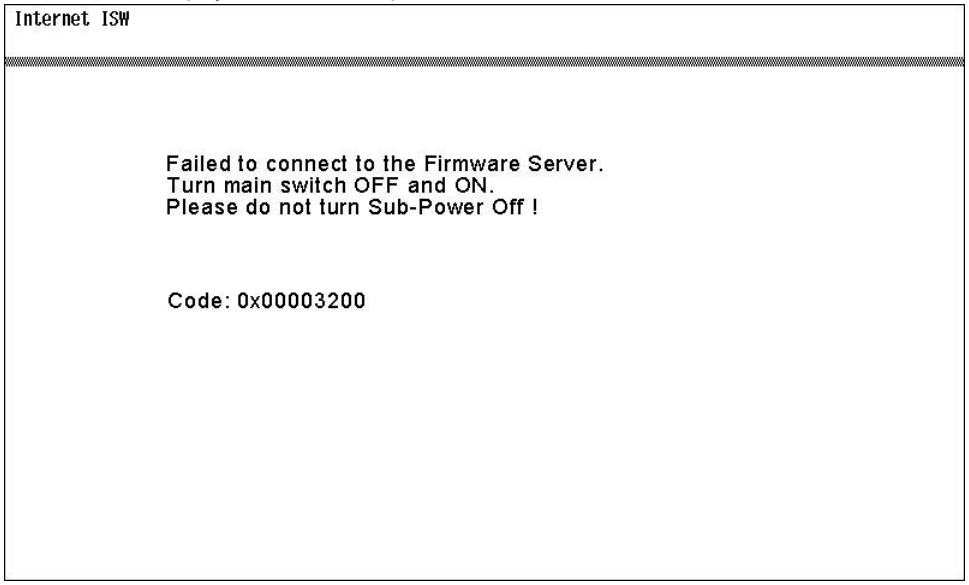


**NOTE**

- **When a code other than the error code list is displayed, contact and inform the error code.**

## 5.2 0x0#

| Error code | Description | Countermeasure |
|---|---|---|
| 0x00000001 | Illegal error on the control | • Check if [Service Mode] -> [Machine Update Setting] -> [Internet ISW] -> [Internet ISW Set] is set to “ON”.<br>• Check the status of [Service Mode] -> [Machine Update Setting] -> [Internet ISW] -> [Forwarding Access Setting].<br>• If the above process does not solve the problem, inform the corresponding error code to the KONICA MINOLTA. |
| 0x00000010 | Parameter error | • Check if [Service Mode] -> [Machine Update Setting] -> [Internet ISW] -> [Internet ISW Set] is set to “ON”.<br>• If the above process does not solve the problem, inform the corresponding error code to the KONICA MINOLTA. |
| 0x00111000 | Error concerning the network<br>• Connection has been completed. | • Check the User’s network environment. (LAN cable’s connection)<br>• Check the status of [Service Mode] -> [Machine Update Setting] -> [Internet ISW] -> [Forwarding Access Setting].<br>• Check to see if the FTP server operates normally. |
| 0x00111001 | Error concerning the network<br>• It cannot be connected to the server. | • Check the User’s network environment.<br>• Check to see if the FTP server operates normally.<br>• Check whether the URL of the data transfer server includes http://, ftp://, or the like to specify a protocol in [Service Mode] -> [Machine Update Setting] -> [Internet ISW] -> [Forwarding Access Setting]. |
| 0x00111100 | Error concerning the network<br>• Communication timeout. | |
| 0x00111101 | Error concerning the network<br>• Disconnection occurred. | • Check the User’s network environment.<br>• Check to see if the FTP server operates normally. |
| 0x00111110 | Error concerning the network<br>• The network is not connected. | |
| 0x00110010 | Error concerning the network<br>• Others | |
| 0x00001### | FTP error<br>• Reply code when it failed to be connected. | • Check to see if the FTP server operates normally.<br>• Check the IP address, user’s name, etc. |
| 0x00002### | FTP error<br>• Error reply code for the user command or pass command. | Check to see if the FTP server operates normally. |
| 0x00003### | FTP error<br>• Error reply code for the CWD command. | |
| 0x00004### | FTP error<br>• Error reply code for the TYPE command. | Check to see if the FTP server operates normally. |
| 0x00005### | FTP error<br>• Error reply code for the PORT command. | |

| Error code | Description | Countermeasure |
|---|---|---|
| 0x00006### | FTP error<br>• Error reply code for the PASV command. | • Check to see if the FTP server operates normally.<br>• Set the PASV mode to “OFF”, and try it again. |
| 0x00007### | FTP error<br>• Error reply code for the RETR command. | • Check to see if the FTP server operates normally.<br>• Wait for about 30 minutes and try it again. |

## 5.3 0x1#

| Error code | Description | Countermeasure |
|---|---|---|
| 0x10000100 | • It cannot be accepted because of the job currently being executed.<br>• ISW being executed by other method. | Wait for the current job to be completed and try it again. |
| 0x10000101 | It cannot be accepted because the power key is OFF. | Turn power key ON and try it again. |
| 0x10000102 | The Internet ISW is already being executed. | Wait for the current Internet ISW to be completed. |
| 0x10000103 | It failed to prohibit the job. (It failed to lock the operation.)<br>-> It failed to lock the job because the operation is already locked with PSWC, etc. | • Check if [Service Mode] -> [Machine Update Setting] -> [Internet ISW] -> [Internet ISW Set] is set to “ON”.<br>• If the above process does not solve the problem, inform the corresponding error code to the KONICA MINOLTA. |
| 0x10000104 | There is no space for firmware data to be downloaded. | |
| 0x10000106 | Check sum error | |
| 0x10000107 | File access error<br>• The file downloaded has an error.<br>• The header of the file which has been read has an error.<br>• The size of the file to be downloaded is too large.<br>• When it is identified to be the different type of firmware. | Check to see if the downloaded firmware is of the correct type. |
| 0x10000108 | The area firmware is stored is destroyed, and another ISW is necessary. | Wait until ISW is automatically executed on MFP side. |

## 5.4 0x2#

| Error code | Description | Countermeasure |
|---|---|---|
| 0x20000000 | The temporary error when running the subset<br>• When starting the Internet ISW in a normal program, the rebooting will start and the Internet ISW will be executed with the subset program.<br>During the process by the subset program, it has to be in the “Failed” status unless the Internet ISW is successfully conducted. This code is used temporarily to make it in error status. | Wait until ISW is automatically executed on MFP side. |

# 6. CS Remote Care ERROR CODE

## 6.1 Troubleshooting for CS Remote Care

If communication is not done properly, check the condition by following the procedures shown below.

1. Shift the screen in the order of [Service Mode] -> [CS Remote Care] -> [Detail Setting].
   At this time, in the cases of initial transmitting / administrator transmitting / maintenance start transmitting / maintenance finish transmitting, the communication result will be displayed at the top of the screen.

**NOTE**

- **For the communication result, the following message will be displayed based on its success or failure.**

| Display of communication result | Cause | Solution |
|---|---|---|
| Communicating | - | - |
| Communication trouble with the center | Although the machine tries to communicate with the center, there is any trouble and the communication completes unsuccessfully. | See the list of error message and confirm the corresponding point. |
| Complete successfully | - | - |
| Modem trouble | Although the machine tries to communicate with the center, there is any trouble in the modem. | • Check if the power of modem in ON.<br>• Check if there is any problem in connection between the modem and the main body. |
| Busy line | Although the machine tries to communicate with the center, the line to the center is busy. | Communicate with the center again. |
| No response | Although the machine tries to communicate with the center, there is no response from the center. | • Communicate with the center again.<br>• Check the communication environment of the center side. |

## 6.2 CS Remote Care Operation under Enhanced Security Mode

CS Remote Care can be used even when “ON” is selected in [Administrator Settings] -> [Security Settings] -> [Enhanced Security Mode].
However, to keep the enhanced security level, the following restrictions are accompanied.

- Only SSL communication is available.
- Error occurs if the Center tries to send the following commands.
  - Firmware update command
  - Command of reading and updating account track information
  - Machine settings update command
  - Command of reading and updating Internet ISW setting information

## 6.3 List of the CS Remote Care error code

### 6.3.1 When connecting by modem

**NOTE**

- **When a code other than the ones listed below is displayed, contact KM and inform the error code.**

| Error code | Contents | Solution |
|---|---|---|
| 0001 | The line is busy<br>• Busy detection | Transmit again manually. |
| 0002 | Failure of the Modem default setting at transmitting<br>• When the transmission completes with modem initial setting failed | • Check if the power of the modem is ON.<br>• Check the connecting condition between the modem and the main body. |
| 0003 | Timeout of CONNECT at transmitting<br>• No response to ATD | • Transmit again manually.<br>• Check if the power of the modem is ON.<br>• Check the connecting condition between the modem and the main body. |
| 0005 | Timeout of CONNECT at receiving<br>• No response to ATA | • Check if the power of the modem is ON.<br>• Check the connecting condition between the modem and the main body. |
| 0006 | Shut down of the data modem line (Host)<br>• Carrier OFF is detected | No solution, because the line is shut down at the host side. |
| 0008 | Timeout of start request telegram delivery<br>• Start request telegram is not delivered after line connection | Transmit again manually. |
| 0009 | Timeout of finish request telegram delivery<br>• Finish request telegram is not delivered (Start of shut down) | Transmit again manually. |
| 000A | Receiving rejection<br>• Receiving is made when the main body is set to reject receiving. | • Check the setting condition of the host side.<br>• Check the setting condition of the main body side. |
| 000B | RS232C driver over run<br>• When the modem detects over run. | If the same error is detected several times, turn the modem power OFF and ON. |
| 000C | Framing error<br>• When the modem detects framing error. | If the same error is detected several times, turn the modem power OFF and ON. |
| 000D | Break Interrupt (BI) indicator<br>• When the modem detects Break Interrupt (BI) indicator. | If the same error is detected several times, turn the modem power OFF and ON. |
| 0011 | Baud rate ERROR<br>• When selected baud rate is out of the specification (9600 bps to 38400 bps). | Check the baud rate of the software DipSW. |

| Error code | Contents | Solution |
|---|---|---|
| 0016 | Status error (upon data arrival) | Transmit again manually. |
| 0018 | Machine ID has already been registered<br>• Request telegram 2 (SET-UP) comes from the main body that has already registered machine ID. | Set the initial registrations again for all including the host side. |
| 0019 | Center ID error<br>• Center ID of the host is not identical with the one of start request telegram. | • Check center ID setting of the main body side.<br>• Check the setting condition of the host side. |
| 001A | Device ID inconsistency<br>• Device ID of the host is not identical with the one of start request telegram. | • Check device ID setting of the main body side.<br>• Check the setting condition of the host side. |
| 001B | Device ID unregistered<br>• Request telegram 2 (Constant data transmitting, emergency call) comes from the main body that has not registered device ID yet. | • Check device ID setting of the main body side.<br>• Check the setting condition of the host side. |
| 001C | Grammar error<br>• The specified format is not used in the received reply telegram. | Check the settings for CSRC application. |
| 001D | Change unavailable (Item where change is prohibited)<br>• Host inquires change of the setting of the item not allowed to be changed. | Check the settings for CSRC application. |
| 001E | Impossible to change (during printing)<br>• Setting cannot be changed because the setting change is made during the machine is printing or starts printing. | Try again when the machine is not printing. |
| 001F | Change unavailable (Item where change is prohibited)<br>• Host attempts to write data to the item of which current value has not been read. | Check the settings for CSRC application. |
| 0020 | Timeout of telegram delivery<br>• At waiting mode of telegram delivery the machine fails to receive the telegram in a given time. | Try communication again. |
| 0021 | Telegram longer than the specified length.<br>• A telegram longer than the specified length is received. | Check the settings for CSRC application. |
| 0027 | Transmission / receiving collision<br>• Receiving is detecting during transmitting processing | Try communication again. |

### 6.3.2 When connecting by e-mails

**NOTE**

- **When a code other than the ones listed below is displayed, contact KM and inform the error code.**

**(1) 0###**

| Error code | Contents | Solution |
|---|---|---|
| 0### | Transmission error<br>###: SMTP responding code (hexadecimal)<br>For SMTP responding code, see RFC issued by IETF after converting hexadecimal number into decimal one. | Check the SMTP server on User side. |

**(2) 1###**

| Error code | Contents | Solution |
|---|---|---|
| 1030 | Machine ID mismatching<br>• Received an e-mail which tells that machine ID mismatches. | • Check the machine ID setting.<br>• Check the machine ID setting on host side. |
| 1050 | Grammar error<br>• Received mail did not define the CS Remote Care command (2 digits).<br>• The Type of Subject and the command of attached file are not consistent. | Check mail content. |
| 1061 | Modifying not allowed<br>• The host sent a command mail that asked modifying data of item where setting change is not allowed. | Ask the host to send another instruction mail for modifying. |
| 1062 | Modifying not available due to the copy job currently performing<br>• When informing the host that it cannot be modified due to the copy job currently performing. | Ask the host to send another instruction mail for modifying. |
| 1080 | Data length problem<br>• LEN value of TEXT data and actual data length are not consistent. | Ask the host to send another instruction mail for modifying. |
| 1081 | Frame No. error<br>• The last frame has not been received.<br>• There are missing frame No. | Check the status of the machine registration on host side. |
| 1082 | Subject Type problem<br>• Received code did not define the Type of Subject. | Ask the host to send another instruction mail for modifying. |
| 1084 | Date expired<br>• Expiration date for data modification command has passed. | Ask the host to send another instruction mail for modifying. |

| Error code | Contents | Solution |
|---|---|---|
| 1091 | Oversized command<br>• Received attached file exceeds the machine's receive buffer size. | Ask the host to send another instruction mail for modifying. |
| 1092 | Received an error mail when center setup is not complete | Check the status of the machine registration on host side. |
| 1199 | Illegal request<br>• Status not predicted in design is detected. | Contact KM and inform the error code. |

**(3) 2###**

| Error code | Contents | Solution |
|---|---|---|
| 2039 | Socket is not connected<br>• LAN cable on the copier side is detached. | Check the SMTP server and POP3 server on user side. |
| 203C | Connection timeout | Check timeout setting. |
| 203E | Network is down<br>• LAN cable on main body side is detached. | • Check the connection between main body on the user's side and the network connector.<br>• Check the network environment on the user's side. |

**(4) 3###**

| Error code | Contents | Solution |
|---|---|---|
| 3001 | POP3_AUTHORIZATION_ERR | Check the POP3 server environment on user's side. |
| 3002 | POP3_TRANSACTION_ERR | Check the POP3 server environment on user's side. |
| 3003 | POP3_CONNECT_ERR | Check the POP3 server environment on user's side. |
| 3004 | POP3_TIMEOUT_ERR | Check the POP3 server environment on user's side. |
| 3005 | POP3_FORMAT_ERR | Check the POP3 server environment on user's side. |
| 3006 | POP3_MEMORY_ERR | Check the POP3 server environment on user's side. |
| 3007 | POP3_JOBID_ERR | Check the POP3 server environment on user's side. |
| 3008 | POP3_NO_DATA_ERR | Check the POP3 server environment on user's side. |
| 3009 | POP3_DELETE_FAIL_ERR | Check the POP3 server environment on user's side. |
| 3010 | POP3_MAILBOX_FULL | Check the POP3 server environment on user's side. |

**(5) 4###**

| Error code | Contents | Solution |
|---|---|---|
| 4103 | During polling from main body, MIO is not active and MFP cannot start communication. | Wait for a while and try transmitting again. |
| 4104 | During e-mail transmission from main body to the center, the SMTP channel is not in the "Ready" status and main body cannot send e-mail. | Wait for a while and try transmitting again. |
| 4105 | During polling from main body, the POP3 channel is not in the "Ready" status and main body cannot receive e-mail. | Wait for a while and try transmitting again. |
| 4106 | During e-mail transmission from main body to the center, MIO is not active and MFP cannot start communication. | Wait for a while and try transmitting again. |
| 41F9 | Control error<br>• In the CS Remote Care's internal sequence, message transfer failed. | Turn the main power switch OFF and then ON. |
| 41FA | Control error<br>• MIO response timed out. | Turn the main power switch OFF and then ON. |
| 41FB | Control error<br>• As the file descriptor of the e-mail that MFP receives from MIO is invalid, MFP cannot receive the e-mail. | Turn the main power switch OFF and then ON. |
| 41FC | Control error<br>• During the creation of data to be sent by e-mail, the CS Remote Care's internal status error occurs or the data that need to be sent has not been created. | Turn the main power switch OFF and then ON. |
| 41FD | Control error<br>• During e-mail reception, the parameter sent from MIO to the CS Remote Care is invalid and MFP cannot receive the e-mail. | Turn the main power switch OFF and then ON. |
| 41FE | Control error<br>• After the completion of e-mail transmission, MFP received the transmission completion message from MIO. However, the CS Remote Care's internal status was not the status of transmission completion. | Turn the main power switch OFF and then ON. |
| 41FF | Control error<br>• During e-mail reception, MIO became inactive. | Turn the main power switch OFF and then ON. |
| 4210 | Control error | Turn the main power switch OFF and then ON. |

| Error code | Contents | Solution |
|---|---|---|
| | • E-mail sent from MIO could not be properly handled in the CS Remote Care. | |

**(6) 5###**

| Error code | Contents | Solution |
|---|---|---|
| 5### | MIO detects error when sending an attached file. | Check the SMTP server and POP3 server on user side. |

**(7) 6###**

| Error code | Contents | Solution |
|---|---|---|
| 6### | MIO detects error during a sending sequence. | Check the SMTP server and POP3 server on user side. |

### 6.3.3 When connecting by http

**NOTE**

- **When a code other than the ones listed below is displayed, contact KM and inform the error code.**

**(1) 0###**

| Error code | Contents | Solution |
|---|---|---|
| 0### | Transmission error<br>###: http responding code (hexadecimal)<br>For http responding code, see RFC issued by IETF after converting hexadecimal number into decimal one. | Check the http server. |

**(2) 1###**

| Error code | Contents | Solution |
|---|---|---|
| 1030 | Machine ID mismatching<br>• Received file which tells that machine ID mismatches. | • Check the machine ID setting.<br>• Check the machine ID setting on host side. |
| 1050 | Grammar error<br>• Received file did not define the CS Remote Care command (2 digits).<br>• The Type of Subject and the command of file are not consistent. | Check file content. |
| 1061 | Modifying not allowed<br>• The host sent a command file that asked modifying data of item where setting change is not allowed. | Ask the host to send another instruction file for modifying. |
| 1062 | Modifying not available due to the copy job currently performing<br>• When informing the host that it cannot be modified due to the copy job currently performing. | Ask the host to send another instruction file for modifying. |
| 1080 | Data length problem<br>• LEN value of TEXT data and actual data length are not consistent. | Ask the host to send another instruction file for modifying. |
| 1081 | Frame No. error<br>• The last frame has not been received.<br>• There are missing frame No. | Check the status of the machine registration on host side. |
| 1082 | Subject Type problem<br>• Received code did not define the Type of Subject. | Ask the host to send another instruction file for modifying. |
| 1084 | Date expired<br>• Expiration date for data modification command has passed. | Ask the host to send another instruction file for modifying. |
| 1091 | Oversized command<br>• Received file exceeds the machine's receive buffer size. | Ask the host to send another instruction file for modifying. |
| 1099 | Illegal request<br>• Status not predicted in design is detected. | Contact KM and inform the error code. |

**(3) 2###**

| Error code | Contents | Solution |
|---|---|---|
| 2001 | http request result problem<br>• Internal status error | • Check the network environment on the user's side.<br>• Check http server environment. |
| 2002 | http request result problem<br>• File list acquisition result problem | |
| 2003 | http request result problem<br>• Request header transmission failure | |
| 2004 | http request result problem<br>• Request body transmission failure | |
| 2005 | http request result problem<br>• Response header receive response failure | |

| Error code | Contents | Solution |
|---|---|---|
| 2006 | http request result problem<br>• Response body receive response failure | |
| 2007 | http request result problem<br>• Session ID inconsistent | |

**(4) 3###**

| Error code | Contents | Solution |
|---|---|---|
| 3002 | http request result problem<br>• Unopened client ID was specified | • Check the network environment on the user's side.<br>• Check http server environment. |
| 3003 | http request result problem<br>• Receive time out occurred | |
| 3004 | http request result problem<br>• Receive error occurred. Or wrong request URL was specified. | |
| 3005 | http request result problem<br>• Content-Length or receive size exceeded the specified max. transfer size. Message body size was too large. | |
| 3006 | http request result problem<br>• Due to reset, process was stopped. Or message body size exceeded the specified max. transfer size. | |
| 3007 | http request result problem<br>• Internal error occurred. Or due to internal reset, process was stopped. | |
| 3008 | http request result problem<br>• Connection to WebDAV server failed. | |
| 3009 | http request result problem<br>• Error occurred during transmission to the WebDAV server. | |
| 3010 | http request result problem<br>• Time out occurred during transmission to the WebDav server. | |
| 3011 | http request result problem<br>• Connection to the proxy server failed. | |
| 3012 | http request result problem<br>• The proxy server refused CONNECT request. | |
| 3013 | http request result problem<br>• The proxy server was set to enabled, but the proxy server host was not set. | |
| 3014 | http request result problem<br>• Proxy server authentication failed. | |
| 3015 | http request result problem<br>• Other errors were sent from the proxy server. | |
| 3016 | http request result problem<br>• Internal error occurred. | |
| 3017 | http request result problem<br>• As the device application specified MIO_REQBODY_ERROR, process was stopped. | |

**(5) 4###**

| Error code | Contents | Solution |
|---|---|---|
| 4103 | After the main power switch is switched ON, HTTP communication is attempted under the condition where HTTP communication is not ready. | Wait for a while and try transmitting again. |
| 4106 | When data is uploaded from main body to the web server, the network connection is not enabled and main body cannot start communication. | Wait for a while and try transmitting again. |
| 41FA | Control error<br>• MIO response timed out. | Turn the main power switch OFF and then ON. |

**(6) 5###**

| Error code | Contents | Solution |
|---|---|---|
| 5### | MIO detects error at file sending. | Check the http server environment. |

**(7) 6###**

| Error code | Contents | Solution |
|---|---|---|
| 6### | MIO detects error during a sending sequence. | Check the http server environment. |

**(8) 7###**

| Error code | Contents | Solution |
|---|---|---|
| 7000 | Failure occurs when a certificate for product authentication is acquired from a USB flash drive. | Acquire a new certificate (within 6 days after the issue). |

### 6.3.4 When connecting by Fax modem

| Error code | Contents | Solution |
|---|---|---|
| T50 | Host terminal ID not correct | Check the telephone number set for host. |
| R80 | Serial number received from the host not correct. | Check the status of the machine registration on host side. |
| R81 | Disconnection of writing instruction from host during machine is running. | Wait for a while and try transmitting again. |
| R82 | Disconnection of FAX-CSRC instruction when FAX-CSRC is not allowed. | Check the status of the machine registration on host side. |
| R83 | Host command error. | Contact KM and inform the error code. |
| R84 | NVRAM writing error. | Contact KM and inform the error code. |

# 7. NETWORK ERROR CODE

## 7.1 Display procedure

- It displays the error code on the control panel when any network error occurred.
- Network error code is displayed only when [Administrator Settings] -> [Network Settings] -> [Detail Settings] -> [Error Code Display Setting] is in “ON.”

### 7.1.1 IEEE802.1X, E-Mail/Internet Fax, WebDAV client

- When a network error occurred on IEEE802.1X, E-Mail/Internet Fax, WebDAV client, the attention mark will be displayed on the control panel.
- Touching the attention mark will display the corresponding network error code.



### 7.1.2 Other network error

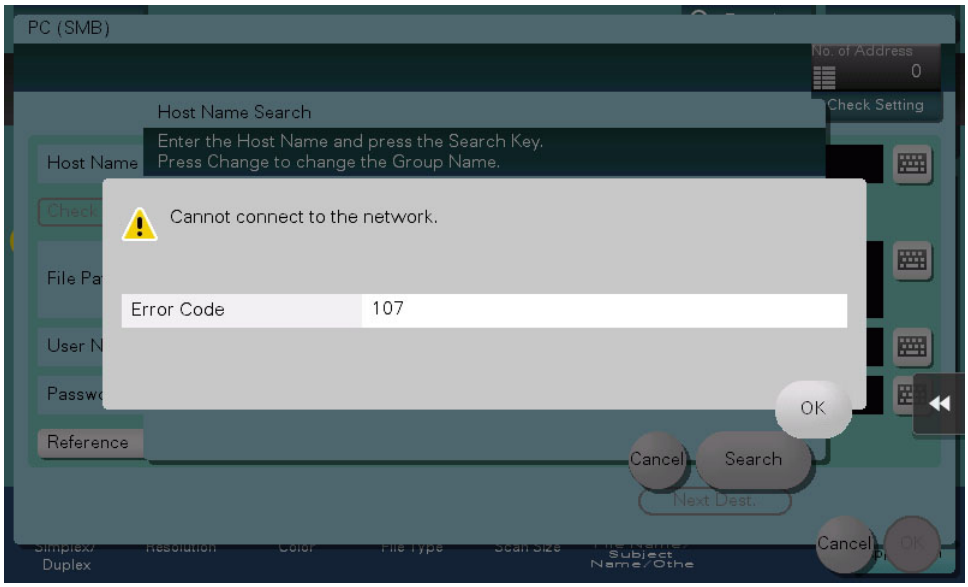


## 7.2 IEEE802.1X

| Error code | Contents of error |
|---|---|
| 1 | Connection has already been established. |
| 2 | Setting error. |
| 3 | Unable to find the destination AP (SSID). |
| 5 | Negotiation of the EAP method failed. |
| 6 | The EAP authentication failed (user ID, password, certificate, etc.) |
| 10 | Verification error of the server certificate (EAP-TLS/EAP-TTLS/PEAP). |
| 14 | Negotiation of the phase 2 method failed (PEAP). |
| 15 | Response from the server has timed out. |
| 17 | Failed to start the supplicant task. |
| 19 | The server certificate has expired (EAP-TLS/EAP-TTLS/PEAP). |
| 20 | CA verification error of the server certificate (EAP-TLS/EAP-TTLS/PEAP). |
| 21 | Server ID verification error of the server certificate (EAP-TLS/EAP-TTLS/PEAP). |
| 24 | The setting combination is correct. |
| 25 | Connection and authentication are complete. |
| 31 | Incorrect format of the server certificate (EAP-TLS/EAP-TTLS/PEAP). |
| 33 | The hard disk path is not specified for the certificate verification (PKI) function (EAP-TLS/EAP-TTLS/PEAP). |
| 34 | The certificate verification (PKI) function is in the excessive multiplex processing status (EAP-TLS/EAP-TTLS/PEAP). |
| 35 | Parameter error of the certificate (EAP-TLS/EAP-TTLS/PEAP). |
| 36 | Internal error of the certificate verification (PKI) function (EAP-TLS/EAP-TTLS/PEAP). |

## 7.3 LDAP

| Error code | Contents of error |
|---|---|
| 1 | An invalid operation occurred. |
| 2 | A protocol error occurred. |
| 3 | The time limit is exceeded. |
| 4 | The number of search results has exceeded the maximum number of items allowed. |
| 5 | The comparison result is FALSE. |
| 6 | The comparison result is TRUE. |
| 7 | The LDAP server does not support SASL. |
| 8 | Strong authentication is required. |
| 10 | Unable to trace the link although Referral is specified. |
| 11 | Administration limit on the server has exceeded. |
| 12 | Critical extension is unavailable. |
| 13 | Confidentiality is required. |
| 14 | Intermediary bind result for multi-stage binds. |
| 15 | Requested attribute does not exist. |
| 16 | The type is not defined. |

| Error code | Contents of error |
|---|---|
| 17 | An inappropriate matching occurred. |
| 18 | A constraint violation occurred. |
| 19 | The attribute exists or the value has been assigned. |
| 20 | The syntax is invalid. |
| 32 | Cannot find the search route. |
| 33 | The alias is invalid. |
| 34 | The syntax of DN is invalid. |
| 35 | This object is a terminal (leaf). |
| 36 | Cannot de-reference the alias. |
| 48 | Authentication is inappropriate. |
| 49 | Failed to log in to the LDAP server. |
| 50 | The user has insufficient access rights. |
| 51 | The server is busy. |
| 52 | The server is unavailable. |
| 53 | The server does not handle directory requests. |
| 54 | The chain of referrals has looped back to a referring server. |
| 64 | There was a naming violation. |
| 65 | There was an object class violation. |
| 66 | Operation is not allowed on a non-leaf object. |
| 67 | Operation is not allowed on RDN. |
| 68 | The object already exists. |
| 69 | Cannot modify object class. |
| 70 | Results returned are too large. |
| 71 | Multiple directory service agents (DSA) are affected. |
| 80 | An unexpected error occurred. |
| 81 | Unable to connect to the LDAP server. |
| 82 | Internal error occurred. |
| 83 | An encode error occurred. |
| 84 | A decode error occurred. |
| 85 | The connection has timed out. |
| 86 | The supported SASL does not match the LDAP server side. |
| 87 | The searching filter is invalid. |
| 88 | Cancelled by the user. |
| 89 | An internal parameter error occurred. |
| 90 | Failed to allocate memory. |
| 91 | Unable to connect to the LDAP server. |
| 92 | The supported LDAP version does not match the LDAP server side. |
| 93 | The LDAP function did not find the specified control. |
| 94 | The result is not included in the message. |
| 95 | Additional results are to be returned. |
| 96 | Client loop was detected. |
| 97 | The referral limit was exceeded. |
| 128 | Failed to resolve the LDAP server name using the DNS server. |
| 129 | The certificate of the LDAP server has expired. |
| 130 | Mutual authentication using GSS-SPNEGO (Kerberos v5) failed. |
| 131 | The search result remains. |
| 132 | The process is cancelled by a device reset. |
| 2238 | The CN field of the LDAP server certificate does not match the server address. |
| 2239 | The LDAP server certificate does not have the expected usage for a server. |
| 2240 | • The LDAP server certificate is not trusted.<br>• To trust the certificate, the certificate must be registered to the system. |
| 2241 | The LDAP server certificate has expired. |
| 2242 | The CA server rejected the connection. |
| 2243 | The connection to the server that checks for expiration of the certificate has timed out. |
| 2244 | Unable to check for expiration because the CRL size exceeds the maximum capacity that can be retained (1MB). |
| 2261 | The format of the LDAP server certificate is invalid. |
| 2263 | The hard disk has not been set. |

| Error code | Contents of error |
|---|---|
| 2264 | Unable to perform verification because there are too many certificates to be verified (the maximum number of certificates that can be verified at a time is 20). |
| 2266 | Internal error of the certificate verification/management module. |
| 2267 | The device certificate does not exist. |
| 2268 | No certificate is sent from the communications peer. |
| 10000 | Failed in authentication using a PKI card (PKI token). |
| 12236 | The ticket certificate has expired. |
| 12239 | The ticket certificate does not have the expected usage for a server. |
| 12240 | • The ticket certificate is not trusted.<br>• To trust the certificate, the certificate must be registered to the system. |
| 12241 | The ticket certificate has expired. |
| 12242 | The CA server rejected the connection. |
| 12243 | The connection to the server that checks for expiration of the certificate has timed out. |
| 12244 | Unable to check for expiration because the CRL size exceeds the maximum capacity that can be retained (1MB). |
| 12261 | The format of the ticket certificate is invalid. |
| 12263 | The hard disk has not been set. |
| 12264 | Unable to perform verification because there are too many certificates to be verified (the maximum number of certificates that can be verified at a time is 20). |
| 12266 | Internal error of the certificate verification/management module. |

## 7.4 E-Mail/Internet Fax

| Error code | Contents of error |
|---|---|
| 1 | Failed to log in to the E-mail server. |
| 2 | An internal error occurred. |
| 3 | Failed to connect to the server. |
| 4 | The connection has timed out. |
| 5 | Decoding failed due to invalid MIME format or S/MIME format. |
| 6 | Failed to allocate memory. |
| 7 | Job ID is invalid. |
| 9 | Failed to delete an E-mail message. |
| 10 | The mail box is full. |
| 11 | Failed to search the certificate. |
| 12 | Failed to retrieve the device certificate or private key. |
| 13 | • An I/O error occurred.<br>• A hard disk operation error has occurred, or memory capacity of the computer may be insufficient. |
| 14 | The S/MIME function is disabled. |
| 15 | The hard disk is invalid. |
| 16 | The format of the certificate from the E-mail sender is invalid. |
| 2236 | The certificate has expired, or the validity period has not yet started. |
| 2238 | The CN field of the certificate does not match the server address. |
| 2239 | The certificate does not have the expected usage. |
| 2240 | • The certificate is not trusted.<br>• To trust the certificate, the certificate must be registered to the system. |
| 2241 | The certificate has expired. |
| 2242 | The CA server rejected the connection. |
| 2243 | The connection to the server that checks for expiration of the certificate has timed out. |
| 2244 | Unable to check for expiration because the CRL size exceeds the maximum capacity that can be retained (1MB). |
| 2261 | The format of the certificate is invalid. |
| 2263 | Failed to initialize the certificate verification. |
| 2264 | Unable to perform verification because there are too many certificates to be verified (the maximum number of certificates that can be verified at a time is 20). |
| 2266 | Internal error of the certificate verification. |
| 2267 | The device certificate does not exist. |
| 2268 | No certificate is sent from the server. |

## 7.5 FTP transmission

| Error code | Contents of error |
|---|---|
| 11 | The network connection is busy. |
| 22 | Parameter error (e.g. the file name is NULL). |

| Error code | Contents of error |
|---|---|
| 27 | Parameter is invalid. |
| 92 | The specified protocol is unavailable. |
| 100 | The device is not connected to the network. |
| 102 | The process is cancelled by a device reset. |
| 105 | Failed to allocate memory. |
| 106 | The FTP connection is already open. |
| 107 | Failed to connect to the server. |
| 110 | The connection has timed out. |
| 111 | The connection has been interrupted. |
| 450 | The file has not been deleted. |
| 451 | The file transfer failed (e.g. due to insufficient server capacity). |
| 452 | The file transfer failed (e.g. due to insufficient server capacity). |
| 530 | Incorrect login name or password. |
| 550 | The specified folder does not exist. |
| 552 | The file operation failed (e.g. due to insufficient server capacity). |
| 1001 | Failed to create a folder. |

## 7.6 SMB transmission

| Error code | Contents of error |
|---|---|
| 11 | The network connection is busy. |
| 92 | The protocol is not initialized. |
| 100 | • The device is not connected to the network.<br>• The connection has been interrupted. |
| 102 | The network is reset during forwarding. |
| 105 | An I/O buffer capacity shortage occurred. |
| 107 | Failed to connect to the server. |
| 4096 | • The host name is not specified.<br>• The specified host name does not exist on the network. |
| 4097 | • The user name is not specified.<br>• Unable to log in with the specified user name and password.<br>• The user does not have write permission to the folder.<br>• Failed to log in due to an SMB protocol error. |
| 4098 | • The folder name is not specified.<br>• The specified folder does not exist. |
| 4099 | • The user name is not specified.<br>• Unable to log in with the specified user name and password.<br>• The user does not have write permission to the folder.<br>• Failed to log in due to an SMB protocol error. |
| 4100 | The specified file name is invalid. |
| 4101 | • The specified file already exists and is write-protected.<br>• The folder and the disk are write-protected. |
| 4102 | • The specified media to be written is not formatted.<br>• The file system of the specified media to be written is faulty. |
| 4103 | The server capacity is full. |
| 4104 | The server capacity has become full while writing data. |
| 4105 | Other errors to which an error code is not assigned. |
| 4106 | The specified file does not exist. |
| 4107 | The specified directory is not found. |
| 4108 | Failed to create the specified directory. |
| 10000 | Failed in authentication using a PKI card (PKI token). |
| 12236 | The certificate has expired, or the validity period has not yet started. |
| 12239 | The purpose of the certificate is not right. |
| 12240 | CA that cannot be trusted or is not registered. |
| 12241 | The certificate has expired. |
| 12242 | The CA server rejected the connection. |
| 12243 | The connection to the server that checks for expiration of the certificate has timed out. |
| 12244 | The size of the expiration list is too large. |
| 12263 | Failed in initialization of the certificate verification. |
| 12264 | Unable to perform verification because there are too many certificates to be verified (the maximum number of certificates that can be verified at a time is 20). |
| 12266 | Internal error of the certificate verification. |

| Error code | Contents of error |
|---|---|
| 12267 | The device certificate does not exist. |
| 12268 | No certificate is sent from the server. |

## 7.7 SMTP transmission

| Error code | Contents of error |
|---|---|
| 11 | The network connection is busy. |
| 22 | Invalid argument. |
| 27 | The file size is too large. |
| 28 | Insufficient memory of the device. |
| 32 | The pipe is broken. |
| 92 | The specified protocol is unavailable. |
| 100 | The device is not connected to the network. |
| 101 | Unable to reach the destination network. |
| 102 | The connection aborted by the network. |
| 105 | A buffer shortage occurred. |
| 107 | No connection exists with the client. |
| 108 | The connection has been interrupted. |
| 110 | The operation has timed out. |
| 111 | The connection is rejected. |
| 112 | The host is shut down. |
| 421 | SMTP server error. Since the service is unavailable, the transfer channel is closed. |
| 432 | SMTP server error. The password must be changed. |
| 450 | SMTP server error. Unable to access to the mail box. |
| 451 | SMTP server error. The requested action has been cancelled because an error occurred while processing a job. |
| 452 | SMTP server error. Shortage of the system storage capacity. |
| 453 | SMTP server error. No E-mail massage. |
| 454 | SMTP server error. Temporary authentication failure. |
| 458 | SMTP server error. Unable to queue a message to the node. |
| 459 | SMTP server error. The node is not permitted. |
| 499 | SMTP server error. An unsupported SMTP error code of 400s is received from the SMTP server. |
| 500 | SMTP server error. Syntax error (command unrecognized). |
| 501 | SMTP server error. Syntax error in parameters or arguments. |
| 502 | SMTP server error. The command is not implemented. |
| 503 | SMTP server error. Bad sequence of commands. |
| 504 | SMTP server error. The command parameter is not implemented. |
| 521 | SMTP server error. The server does not receive E-mail. |
| 530 | SMTP server error. The access is rejected. |
| 534 | SMTP server error. The authentication mechanism is too weak. |
| 535 | SMTP server error. Authentication error. |
| 538 | SMTP server error. The requested authentication mechanism requires encryption. |
| 550 | SMTP server error. The requested action is not executed. |
| 551 | SMTP server error. The user is not connected locally. |
| 552 | SMTP server error. The requested E-mail action is cancelled. |
| 553 | SMTP server error. The requested action is not accepted. |
| 554 | An SMTP server error, or an internal error when sending data. The transaction failed. |
| 555 | SMTP server error. MAIL/RCPT parameter error. |
| 599 | SMTP server error. An unsupported SMTP error code of 500s is received from the SMTP server. |
| 2236 | The certificate has expired, or the validity period has not yet started. |
| 2238 | The CN field of the certificate does not match the server address. |
| 2239 | The certificate does not have the expected usage. |
| 2240 | • The certificate is not trusted.<br>• To trust the certificate, the certificate must be registered to the system. |
| 2241 | The certificate has expired. |
| 2242 | The CA server rejected the connection. |
| 2243 | The connection to the server that checks for expiration of the certificate has timed out. |
| 2244 | Unable to check for expiration because the CRL size exceeds the maximum capacity that can be retained (1MB). |
| 2261 | The format of the certificate is invalid. |
| 2263 | Failed to initialize the certificate verification. |

| Error code | Contents of error |
|---|---|
| 2264 | Unable to perform verification because there are too many certificates to be verified (the maximum number of certificates that can be verified at a time is 20). |
| 2266 | Internal error of the certificate verification. |
| 2267 | The device certificate does not exist. |
| 2268 | No certificate is sent from the server. |
| 3000 | An unexpected error occurred. |
| 3001 | An unexpected error occurred within the library being used. |
| 3002 | An invalid channel is specified. |
| 3003 | SMTP server address is invalid. |
| 3004 | Parameter error (MIMEBodyHeader). |
| 3005 | Parameter error (DisplayName). |
| 3006 | Parameter error (character set). |
| 3007 | Parameter error (From address). |
| 3008 | Parameter error (To address). |
| 3009 | Parameter error (CC address). |
| 3010 | Parameter error (BCC address). |
| 3011 | Parameter error (pEmailSet is NULL). |
| 3012 | Parameter error (destination certificate is NULL). |
| 3013 | Parameter error (E-mail body). |
| 3014 | The hard disk is invalid. |
| 3015 | The S/MIME function is disabled. |
| 3016 | • Self-certificate error. The device certificate cannot be used in the S/MIME function.<br>• One possibility, among others, is that the type of encryption key is not RSA. |
| 3018 | An invalid encryption algorithm is specified. |
| 3019 | An invalid signature algorithm is specified. |
| 3020 | The E-mail address included in the destination certificate does not match the destination address (To/Cc/Bcc). |
| 3021 | The E-mail address included in the certificate does not match the sender (From) address. |
| 3022 | Format error of the certificate. |
| 3023 | Parameter error (Disposition-Notification-To). |
| 3024 | Message syntax error of the receiver side. |
| 3025 | The SMTP server does not support the STARTTLS command. |
| 3026 | PKI card access error. |
| 3027 | Parameter error (SMTP authentication method) |
| 3028 | Parameter error (PIN code) |
| 3029 | Failed to retrieve a ticket. |
| 10000 | Failed in authentication using a PKI card (PKI token). |
| 12236 | The validity period of the server certificate is invalid. |
| 12239 | The certificate does not have the usage expected as a server. |
| 12240 | • The certificate is not trusted.<br>• To trust the certificate, the certificate must be registered to the system. |
| 12241 | The certificate has expired. |
| 12242 | The CA server rejected the connection. |
| 12243 | The connection to the server that checks for expiration of the certificate has timed out. |
| 12244 | Unable to check for expiration because the CRL size exceeds the maximum capacity that can be retained (1MB). |
| 12261 | The format of the certificate is invalid. |
| 12263 | Although the environment is configured to use the hard disk, it is unable to perform verification because the hard disk path has not been specified. |
| 12264 | Unable to perform verification because there are too many certificates to be verified (the maximum number of certificates that can be verified at a time is 20). |
| 12266 | Internal error of the certificate verification/management module. |

## 7.8 WebDAV transmission

| Error code | Contents of error |
|---|---|
| 11 | The network connection is busy. |
| 22 | • The format of the URL of the target resource is invalid.<br>• Parameter error. |
| 27 | Attempted to send data that exceeds the maximum transferrable size for transfer coding. |
| 92 | WebDAV transmission is disabled. |
| 100 | The device is not connected to the network. |

| Error code | Contents of error |
|---|---|
| 102 | The process is cancelled by a device reset. |
| 105 | A buffer shortage occurred. |
| 106 | The connection has already been established. |
| 107 | The connection to the WebDAV server failed (including connection time out). |
| 125 | The connection has been interrupted with the condition that is insufficient to the specified size. |
| 401 | Authentication error. |
| 407 | Proxy authentication error. |
| 1001 | • The server does not support WebDAV.<br>• Unable to upload data to the server. |
| 1002 | The intermediate resource is not a collection (directory) (e.g. the specified folder does not exist). |
| 1003 | The target resource is a collection (directory). |
| 1012 | Although “https” is specified for the resource URL, the connection is interrupted because the WebDAV server certificate has expired. |
| 1013 | The CONNECT method is issued to the proxy server to establish an SSL connection via a proxy, but it is rejected. |
| 1017 | A communication error occurred while sending a request. |
| 1018 | A communication error occurred while receiving a response. |
| 1027 | The transfer size exceeds the maximum allowance. |
| 1030 | Although use of a proxy has been specified, the proxy setting information is unavailable. |
| 1031 | The connection to the proxy server failed (including connection time out). |
| 1040 | Failed to retrieve a ticket. |
| 1098 | Failed in chunk TX to SharePoint Server. |
| 1099 | Other internal error occurred (e.g. memory shortage). |
| 2236 | The certificate has expired, or the validity period has not yet started. |
| 2238 | The CN field of the certificate does not match the server address. |
| 2239 | The certificate does not have the expected usage. |
| 2240 | • The certificate is not trusted.<br>• To trust the certificate, the certificate must be registered to the system. |
| 2241 | The certificate has expired. |
| 2242 | The CA server rejected the connection. |
| 2243 | The connection to the server that checks for expiration of the certificate has timed out. |
| 2244 | Unable to check for expiration because the CRL size exceeds the maximum capacity that can be retained (1MB). |
| 2261 | The format of the certificate is invalid. |
| 2263 | Failed to initialize the certificate verification. |
| 2264 | Unable to perform verification because there are too many certificates to be verified (the maximum number of certificates that can be verified at a time is 20). |
| 2265 | Parameter error. |
| 2266 | Internal error of the certificate verification. |
| 2267 | The device certificate does not exist. |
| 2268 | No certificate is sent from the server. |
| 10000 | Failed in authentication using a PKI card (PKI token). |
| 12236 | The validity period of the server certificate is invalid. |
| 12239 | The certificate does not have the usage expected as a server. |
| 12240 | • The certificate is not trusted.<br>• To trust the certificate, the certificate must be registered to the system. |
| 12241 | The certificate has expired. |
| 12242 | The CA server rejected the connection. |
| 12243 | The connection to the server that checks for expiration of the certificate has timed out. |
| 12244 | Unable to check for expiration because the CRL size exceeds the maximum capacity that can be retained (1MB). |
| 12261 | The format of the certificate is invalid. |
| 12263 | Although the environment is configured to use the hard disk, it is unable to perform verification because the hard disk path has not been specified. |
| 12264 | Unable to perform verification because there are too many certificates to be verified (the maximum number of certificates that can be verified at a time is 20). |
| 12266 | Internal error of the certificate verification/management module. |

## 7.9 SMB browsing

| Error code | Contents of error |
|---|---|
| 32 | The connection has been interrupted. |
| 92 | The protocol is not initialized. |

| Error code | Contents of error |
|---|---|
| 100 | • The device is not connected to the network.<br>• The internal channel detected an error immediately before establishing communication. |
| 107 | Failed to connect to the server. |
| 4096 | • The group name/host name is not specified.<br>• The specified group name/host name does not exist on the network. |
| 4097 | • The user name is not specified.<br>• Unable to log in with the specified user name and password.<br>• Failed to log in due to an SMB protocol error. |
| 4098 | • Administrative shares do not exist.<br>• The shared resource name is not specified.<br>• The shared resource does not exist. |
| 4099 | • The user name is not specified.<br>• Unable to log in with the specified user name and password.<br>• Failed to log in due to an SMB protocol error. |
| 4102 | • The specified media to be written is not formatted.<br>• The file system of the specified media to be written is faulty. |
| 4105 | Other errors to which an error code is not assigned. |
| 4352 | The browser machine (master browser/backup browser) is not found. |
| 4353 | Unable to log in to the browser machine (master browser/backup browser). |
| 4354 | The sub folder does not exist. |
| 4355 | The request is not accepted due to an invalid call sequence etc. |
| 4368 | The number of groups is too large. |
| 4369 | The number of host PCs is too large. |
| 4370 | The number of shared resources is too large. |
| 10000 | Failed in authentication using a PKI card (PKI token). |
| 12236 | The certificate has expired, or the validity period has not yet started. |
| 12239 | The purpose of the certificate is not right. |
| 12240 | CA that cannot be trusted or is not registered. |
| 12241 | The certificate has expired. |
| 12242 | The CA server rejected the connection. |
| 12243 | The connection to the server that checks for expiration of the certificate has timed out. |
| 12244 | The size of the expiration list is too large. |
| 12263 | Failed in initialization of the certificate verification (The path of the hard disk for saving certificates is not specified). |
| 12264 | Unable to perform verification because there are too many certificates to be verified (the maximum number of certificates that can be verified at a time is 20). |
| 12266 | Internal error of the certificate verification. |
| 12267 | The device certificate does not exist. |
| 12268 | No certificate is sent from the server. |

## 7.10 User authentication

| Error code | Contents of error |
|---|---|
| 1 | • Invalid parameter (e.g. the number of characters exceeds the limit, blank).<br>• The authentication function setting is disabled. |
| 2 | Failed to resolve the name using the DNS server. |
| 3 | Unable to find the authentication server. |
| 4 | Failed to authenticate. |
| 5 | • Failed to allocate memory.<br>• An unexpected error occurred. |
| 6 | An authentication request is received while an internal task of the user authentication client is being performed. |
| 7 | The network was reset during user authentication. |
| 8 | Failed to allocate memory. |
| 9 | Time out occurred. |
| 10000 | Failed in authentication using a PKI card (PKI token). |
| 12236 | The SSL certificate has expired. |
| 12239 | The certificate does not have the expected usage. |
| 12240 | • The certificate is not trusted.<br>• To trust the certificate, the certificate must be registered to the system. |
| 12241 | The certificate has expired. |
| 12242 | The CA server rejected the connection. |
| 12243 | The connection to the server that checks for expiration of the certificate has timed out. |
| 12244 | Unable to check for expiration because the CRL size exceeds the maximum capacity that can be retained (1MB). |

| Error code | Contents of error |
|---|---|
| 12261 | The format of the certificate is invalid. |
| 12263 | The hard disk has not been set. |
| 12264 | Unable to perform verification because there are too many certificates to be verified (the maximum number of certificates that can be verified at a time is 20). |
| 12266 | Internal error of the certificate verification/management module. |

## 7.11 WebDAV client/Remote panel (Response reception)

| Error code | Contents of error |
|---|---|
| 3 | Reception time out occurred. |
| 4 | • Reception error occurred.<br>• An invalid request URL is specified. |
| 5 | • The size of the content length or the receive size exceeds the maximum transferable size.<br>• The size of the message body is too large. |
| 6 | • The process is cancelled by a device reset.<br>• The size of the message body exceeds the maximum transferable size. |
| 7 | • Internal error occurred.<br>• The process is cancelled by an internal reset. |

## 7.12 WebDAV client/Remote panel (Request sending)

| Error code | Contents of error |
|---|---|
| 2 | The ID of a client that is not active is specified. |
| 3 | The request method that is not supported has been specified. |
| 4 | An invalid request URL is specified. |
| 5 | The size of the message body is too large. |
| 6 | The size of the message body exceeds the maximum transferable size. |
| 7 | The process is cancelled by an internal reset. |
| 8 | Failed to connect to the WebDAV server. |
| 9 | An error occurred while sending data to the WebDAV server. |
| 10 | A timeout occurred while sending data to the WebDAV server. |
| 11 | Failed to connect to the proxy server. |
| 12 | The proxy server rejected the connection request. |
| 13 | While the proxy server specification is valid, the host of the proxy server is not specified. |
| 14 | Failed to authenticate the proxy server. |
| 15 | Other error was returned from the proxy server. |
| 16 | An internal error occurred. |
| 17 | The process is cancelled because MIO_REQBODY_ERROR is specified by the device application. |
| 18 | An invalid PIN code is specified. |
| 19 | Failed to retrieve a ticket. |
| 20 | The internally specified parameter is invalid. |
| 2236 | The certificate has expired, or the validity period has not yet started. |
| 2238 | The CN field of the certificate does not match the server address. |
| 2239 | The certificate does not have the expected usage. |
| 2240 | • The certificate is not trusted.<br>• To trust the certificate, the certificate must be registered to the system. |
| 2241 | The certificate has expired. |
| 2242 | The CA server rejected the connection. |
| 2243 | The connection to the server that checks for expiration of the certificate has timed out. |
| 2244 | Unable to check for expiration because the CRL size exceeds the maximum capacity that can be retained (1MB). |
| 2261 | The format of the certificate is invalid. |
| 2263 | Failed to initialize the certificate verification. |
| 2264 | Unable to perform verification because there are too many certificates to be verified (the maximum number of certificates that can be verified at a time is 20). |
| 2266 | Internal error of the certificate verification. |
| 2267 | The device certificate does not exist. |
| 2268 | No certificate is sent from the server. |
| 10000 | Failed in authentication using a PKI card (PKI token). |
| 12236 | The validity period of the server certificate is invalid. |
| 12239 | The certificate does not have the usage expected as a server. |
| 12240 | • The certificate is not trusted. |

| Error code | Contents of error |
|---|---|
| | • To trust the certificate, the certificate must be registered to the system. |
| 12241 | The certificate has expired. |
| 12242 | The CA server rejected the connection. |
| 12243 | The connection to the server that checks for expiration of the certificate has timed out. |
| 12244 | Unable to check for expiration because the CRL size exceeds the maximum capacity that can be retained (1MB). |
| 12261 | The format of the certificate is invalid. |
| 12263 | Although the environment is configured to use the hard disk, it is unable to perform verification because the hard disk path has not been specified. |
| 12264 | Unable to perform verification because there are too many certificates to be verified (the maximum number of certificates that can be verified at a time is 20). |
| 12266 | Internal error of the certificate verification/management module. |

## 7.13 WSD scan

| Error code | Contents of error |
|---|---|
| 1 | The specified client is not registered. |
| 2 | Parameter is invalid. |
| 3 | The Web service or WS scan function is disabled. |
| 4 | The device is not connected to the network. |
| 5 | Waiting for connection from CP. |
| 6 | The SSL certificate of the destination computer is not valid when the validity period of an SSL certificate is checked. |
| 11 | The network connection is busy. |
| 22 | Invalid argument. |
| 92 | The Web service or WS scan function is disabled. |
| 102 | The network connection is cancelled by a device reset. |
| 103 | The connection has been interrupted. |
| 105 | Failed to allocate memory. |
| 107 | No connection exists with the client. |
| 110 | The operation has timed out. |
| 125 | The RetrieveImage waiting period has timed out. |

## 7.14 Bluetooth

| Error code | Contents of error |
|---|---|
| 2 | Failed to communicate. |
| 3 | An error occurred on the hardware related to Bluetooth. |
| 4 | Failed to allocate memory. |
| 5 | Interrupted from the device side. |

## 7.15 GSS-API

| Error code | Contents of error |
|---|---|
| 4099 | The specified Key tab does not exist. |
| 10000 | Failed in authentication using a PKI card (PKI token). |
| 12236 | The validity period of the server certificate is invalid. |
| 12239 | The certificate does not have the usage expected as a server. |
| 12240 | • The certificate is not trusted.<br>• To trust the certificate, the certificate must be registered to the system. |
| 12241 | The certificate has expired. |
| 12242 | The CA server rejected the connection. |
| 12243 | The connection to the server that checks for expiration of the certificate has timed out. |
| 12244 | Unable to check for expiration because the CRL size exceeds the maximum capacity that can be retained (1MB). |
| 12261 | The format of the certificate is invalid. |
| 12263 | Although the environment is configured to use the hard disk, it is unable to perform verification because the hard disk path has not been specified. |
| 12264 | Unable to perform verification because there are too many certificates to be verified (the maximum number of certificates that can be verified at a time is 20). |
| 12266 | Internal error of the certificate verification/management module. |

## 7.16 Scan server transmission

| Error code | Contents of error |
|---|---|
| 1 | The action is not supported. |
| 2 | The specified parameter is invalid. |
| 3 | The operation failed. |
| 4 | A temporary error occurred on the scan server. |
| 5 | An internal error occurred on the scan server. |
| 6 | The scan server returned an error due to operation by an unauthorized user. |
| 7 | The scan server returned an error due to invalid request. |
| 8 | Addresses for secondary distribution are not supported. |
| 9 | The destination address is not included in the scan process. |
| 10 | The scan server returned an error due to access by an unauthorized user. |
| 11 | The scan server returned an error due to a request for invalid action. |
| 12 | The scan server returned an error due to transmission of unregistered scan process to the scan server. |
| 13 | The scan server returned an error due to a request for invalid action. |
| 14 | The scan server returned an error due to use of a format that is not supported. |
| 2236 | The SSL certificate has expired. |
| 2238 | The CN field of the certificate does not match the server address. |
| 2239 | The certificate does not have the expected usage. |
| 2240 | • The certificate is not trusted.<br>• To trust the certificate, the certificate must be registered to the system. |
| 2241 | The certificate has expired. |
| 2242 | Cannot connect to the CA server upon certificate verification. |
| 2243 | Time out occurred at the time of the certificate verification. |
| 2244 | The size of the expiration list is too large. |
| 2261 | The format of the certificate is invalid. |
| 2263 | No verification can be performed as he hard disk path has not been specified yet. |
| 2264 | Unable to perform verification because there are too many certificates to be verified (the maximum number of certificates that can be verified at a time is 20). |
| 2265 | Parameter of the certificate verification is invalid. |
| 2266 | Internal error of the certificate verification/management module. |
| 2267 | The device certificate does not exist. |
| 2268 | No certificate is sent from the communications peer. |

## 7.17 Wireless LAN (WPS)

| Error code | Contents of error |
|---|---|
| 1 | Time out occurred. |
| 3 | Other errors occurred. |

## 7.18 Cloud connection

| Error code | Contents of error |
|---|---|
| 1 | Cloud connection app being started |
| 2 | Cloud connection error |

# 8. FAX TROUBLE CODE

### The error in the transmission/reception system

- The error in the Txx/Rxx system may be caused under the effect of line noise, etc. even in usual operating condition.
- If the error arises often, output the activity report, fax setting list, protocol trace list, parameter list, address book list, group address list and program list and obtain detailed information on the error status, conditions which may cause the error, etc. from the user and contact KM.

## 8.1 B0##

| Error code | Category | Contents of error | How to correct |
|---|---|---|---|
| B001 | FAX board error | FAX board error 1 (FAX ROM check sum error) | • Pull out and insert the connector of FAX board to check its installation.<br>• If the trouble is not yet corrected, hardware of the FAX board may be defective. Replace the FAX board in such a case. |
| B002 | | FAX board error 2 (DPRAM check error) | |
| B003 | | FAX board error 3 (FAX initialization NG) | |
| B051 | | FAX board installation error (Line 1). | • Pull out and insert the connector of FAX board to check its installation.<br>• If the trouble is not yet corrected, check if the fax (circuit 1) is set to [Unset] on the [Service Mode] -> [System 2] -> [Option board Status].<br>• If it is set to [Unset], set to [Set]. |
| B052 | | FAX board installation error (Line 2). | • Pull out and insert the connector of FAX board to check its installation.<br>• If the trouble is not yet corrected, check if the fax (line 2) is set to [Unset] on the [Service Mode] -> [System 2] -> [Option board Status].<br>• If it is set to [Unset], set to [Set]. |

## 8.2 B11#

| Error code | Category | Contents of error | How to correct |
|---|---|---|---|
| B110 | FAX driver error | Instance generation error or observer registration error | Turn OFF and ON the main power switch. |
| B111 | | Configuration space initialization NG | |
| B112 | | Semaphore acquisition, release error | |
| B113 | | Sequence error among main body tasks | |
| B114 | | Message queue control error | |
| B115 | | Main body - sequence error among FAX boards | Pull out and insert the connector of FAX board to check its installation. |
| B116 | | FAX board nonresponse (Nonresponse after initialization) | |
| B117 | | ACK waiting timeout error | |
| B118 | | Receiving undefined frame | |
| B119 | | DMA transfer error | |

## 8.3 B12#

| Error code | Category | Contents of error | How to correct |
|---|---|---|---|
| B120 | JC | Soft error (FAX board side) | Turn OFF and ON the main power switch. |
| B122 | SPI | Device error (modem-DAA initialization error) | • Turn OFF and ON the main power switch.<br>• If the trouble is not yet corrected, hardware of the FAX board may be defective. Replace the FAX board in such a case. |
| B123 | | Device error (modem-DAA power save recovery error) | |
| B125 | JC | ISW failure of SubCPU | Turn OFF and ON the main power switch. |
| B126 | | Timeout error due to nonresponse from codec control during suspension process | |
| B127 | | Timeout error due to nonresponse from communication control during suspension process | |
| B128 | | Timeout error due to nonresponse from LINE control during suspension process | |
| B129 | | Timeout error due to nonresponse from SPI tasks during suspension process | |

### 8.4 B13#

| Error code | Category | Contents of error | How to correct |
|---|---|---|---|
| B130 | Driver error (FAX board side) | Driver soft error | Turn OFF and ON the main power switch. |
| B131 | | Reception frame length error from main | |
| B132 | | Reception frame header error from main | |
| B133 | | 232C I/F sequence error | |
| B134 | | DPRAM I/F sequence error | |
| B135 | | DPRAM CTL/STS register error | |
| B136 | | ACK waiting timeout | |
| B137 | | DPRAM RESET reception | |
| B139 | CC | No modem response during execution of voice response | |

### 8.5 B14#

| Error code | Category | Contents of error | How to correct |
|---|---|---|---|
| B140 | Soft error (FAX board side) | MSG I/F error with job control | Turn OFF and ON the main power switch. |
| B141 | Soft error | I/F error with driver | |
| B142 | I/F error with main | Undefined command reception | |
| B143 | | Command frame length error | |
| B144 | | Command parameter length error | |
| B145 | | Undefined parameter | |
| B146 | | Command/response sequence error | |

### 8.6 B15#

| Error code | Category | Contents of error | How to correct |
|---|---|---|---|
| B150 | Line control | External class instance acquisition error | Turn OFF and ON the main power switch. |
| B151 | | Job start error (starting job parameter error/child job generation error) | |
| B152 | | Doc access error (report buf access error) | |
| B153 | | Response wait timeout from external task | |
| B154 | | Internal que table control error (create/ enque/deque) | |

### 8.7 B16#

| Error code | Category | Contents of error | How to correct |
|---|---|---|---|
| B160 | 1 destination control | Instance generation error | Turn OFF and ON the main power switch. |
| B161 | | Timeout error | |
| B162 | | Interface error | |
| B163 | | Message que control error | |
| B164 | | Semaphore acquisition release error | |
| B165 | | Observer registration error | |
| B166 | | Reception resource check error | |
| B167 | | Deployment error of sending image information | |
| B168 | | Serialization error of receiving image | |
| B169 | | Access error to quick memory data | |

### 8.8 B17#

| Error code | Category | Contents of error | How to correct |
|---|---|---|---|
| B170 | Page control | Internal que table control error (create/ enque/deque) | Turn OFF and ON the main power switch. |
| B171 | | Instance generation error | |
| B172 | | Timeout error | |
| B173 | | Interface error | |
| B174 | | Semaphore acquisition release error | |
| B175 | | Observer registration error | |
| B176 | | Unable to secure TTI domain | |

| Error code | Category | Contents of error | How to correct |
|---|---|---|---|
| B177 | | Error return from TTI rasterizer | |
| B178 | | Receiving job generation error | |
| B179 | | Sequence control error (line specification fault, status mismatch, event mismatch) | |

### 8.9 B18#

| Error code | Category | Contents of error | How to correct |
|---|---|---|---|
| B180 | Page control | Access error to quick sending memory data | Turn OFF and ON the main power switch. |
| B181 | | BlockBuff acquisition error | |
| B182 | | Sending block image error (Req, restore) | |
| B183 | | Receiving block image error (Req, store) | |
| B184 | | Storage error of receiving image information | |
| B185 | | Receiving data size logic error (Receiving data are not multiples of dotline) | |
| B186 | | Image buf acquisition (alloc) error | |
| B187 | | Error return from compressor | |
| B188 | | BandBuf control error (newInstance/get/free) | |

### 8.10 B19#

| Error code | Category | Contents of error | How to correct |
|---|---|---|---|
| B190 | USB | USB IF error (OS notifies an error during configuration setting after recovery from the sleep or attach.) | Turn OFF the main power switch, then check the connection of USB, turn ON the main power switch. |
| B191 | | USB IF error (EndPoint1: Bulk Out (command, transmitted image data)) (error retry 1 min. timeout) | |
| B192 | | USB IF error (EndPoint2: Bulk In (response, received image data)) (error retry 5 sec. timeout) | |
| B193 | | USB IF error (EndPoint3: Interrupt In (fax board status)) (error retry 1 min. timeout) | |
| B194 | | USB IF error (EndPoint4: Bulk Out (main body status)) (error retry 3 sec. timeout) | |
| B195 | | USB IF error (Attach not detected for 1 min. after recovery from sleep) | |
| B196 | | USB IF error (Detach not detected for 1 min. after recovery from sleep) | |

### 8.11 T0#

| Error code | Category | Contents of error | How to correct |
|---|---|---|---|
| T00 | Sending | T1 timeout. No response obtained from the machine on the other end of the line. (35 second) | Check that the address number is correct. |
| T01 | | T1 over after the mode has been changed (35 seconds) | - |
| T02 | | DCN reception in DIS waiting | The remote station may not receive the data due to paper shortage, full memory, etc. |
| T03 | | Unexpected command reception in DIS waiting | - |
| T04 | Not used | | |
| T05 | Sending | FIF not matching with the remote station (remote station without the function). | - |
| T06 | | DCN reception in CFR/FTT waiting | - |
| T07 | Not used | | |
| T08 | Sending | Training failure at 2400 bps | The line may be in trouble. Check the line noise. |
| T09 | | No response to DCS | The line may be disabled because the user on the remote station disconnected it. |

## 8.12 T1#

| Error code | Category | Contents of error | How to correct |
|---|---|---|---|
| T10 | Not used | | |
| T11 | Sending | DCN reception while waiting for post message responses | The remote station may not receive the data due to paper shortage, full memory, etc. |
| T12 | | Unexpected command reception while waiting for post message responses | - |
| T13 | | No response while waiting for post message responses | The remote station may not receive the data due to paper shortage, full memory, etc. |
| T14 | Not used | | |
| T15 | Not used | | |
| T16 | Not used | | |
| T17 | Not used | | |
| T18 | Sending | No reception ability in a remote station | The remote station may not receive the data due to paper shortage, full memory, etc. |
| T19 | Not used | | |

## 8.13 T2#

| Error code | Category | Contents of error | How to correct |
|---|---|---|---|
| T20 | Not used | | |
| T21 | Not used | | |
| T22 | Not used | | |
| T23 | Not used | | |
| T24 | Not used | | |
| T25 | Not used | | |
| T26 | Not used | | |
| T27 | Not used | | |
| T28 | ECM sending | Timeout by RR/RNR (60 seconds) | - |
| T29 | Not used | | |

## 8.14 T3#

| Error code | Category | Contents of error | How to correct |
|---|---|---|---|
| T30 | Not used | | |
| T31 | Not used | | |
| T32 | ECM sending | Fall back over by CTC | The line may be in trouble. Check the line noise. |
| T33 | Not used | | |
| T34 | Not used | | |
| T35 | ECM transmission | No responses to RR | - |
| T36 | | DCN reception to RR | - |
| T37 | Not used | | |
| T38 | F code polling TX | SID is received when SEP is received | - |
| T39 | Not used | | |

## 8.15 T4#

| Error code | Category | Contents of error | How to correct |
|---|---|---|---|
| T40 | Calling | Software error at calling | - |
| T41 | Not used | | |
| T42 | Sending | RTN/PIN reception | - |
| T43 | | Three continuous CRP signal reception | - |
| T44 | | Time error between frames at transmission | - |
| T45 | Not used | | |
| T46 | Not used | | |
| T47 | Not used | | |
| T48 | Check destination | Line disconnected due to no match as a result of CSI check. | Telephone number may not be set on the remote station. Check the CSI signal of the remote station in the protocol trace list. |

| Error code | Category | Contents of error | How to correct |
|---|---|---|---|
| T49 | Not used | | |

### 8.16 T5#

| Error code | Category | Contents of error | How to correct |
|---|---|---|---|
| T50 | FAX-CSRC | Host terminal ID inconsistency | - |
| T51 | Sending | The FAX board does not respond during transmission | The line may be in trouble. Check the line noise. |
| T52 | Not used | | |
| T53 | Not used | | |
| T54 | Not used | | |
| T55 | Not used | | |
| T56 | Not used | | |
| T57 | Not used | | |
| T58 | Polling reception | Calling by polling reception, but a remote station does not have polling transmission documents | Polling original may not be set on the remote station. |
| T59 | Not used | | |

### 8.17 T6#

| Error code | Category | Contents of error | How to correct |
|---|---|---|---|
| T60 | Polling transmission | Received the polling transmission request (DTC), but there are no polling transmission documents | Polling original may not be set on your machine. Polling TX is enabled only when the polling transmission original is registered. |
| T61 | F-code polling transmission | Unsatisfactory conditions for receive polling TX request. | Bulletin board original may not be set. Bulletin board TX is enabled only when the bulletin board transmission original is registered. |
| T62 | F-code polling transmission | Box number specified by SEP is not valid. | Bulletin board box number from the remote station may be incorrect. |
| T63 | Not used | | |
| T64 | Not used | | |
| T65 | Not used | | |
| T66 | Not used | | |
| T67 | Not used | | |
| T68 | Not used | | |
| T69 | Not used | | |

### 8.18 T7#

| Error code | Category | Contents of error | How to correct |
|---|---|---|---|
| T70 | Not used | | |
| T71 | Not used | | |
| T72 | Not used | | |
| T73 | Transmission | Modem response waiting T.0 (60 seconds) | - |
| T74 | V34 | No changes in the V34 modem status | - |
| T75 | | V34 signal sending error | - |
| T76 | | CS2 is not turned to ON. | - |
| T77 | Not used | | |
| T78 | Transmission | Codec control soft ware error | - |
| T79 | | Job control soft error at transmission | - |

### 8.19 T8#

| Error code | Category | Contents of error | How to correct |
|---|---|---|---|
| T80 | Call control | LOOP current detection NG when CML is turned ON at calling | • The line may not be connected.<br>• Check the line connection status. |
| | | | • The line may be connected to where other than analog line (Group 4 line/key telephone system).<br>• Check the line connection to analog line (Group 3 line). |
| T81 | | Dial Tone detection NG when CML is turned ON at calling | • The line may not be connected.<br>• Check the line connection status. |

| Error code | Category | Contents of error | How to correct |
|---|---|---|---|
| T82 | | Answer tone (CED/DIS) waiting timeout after dialing at calling | - |
| T83 | | Busy tone detection at calling | - |
| T84 | | Line control dial error | - |
| T85 | | Short disconnection was detected after LOOP current detection at calling | - |
| T86 | Not used | | |
| T87 | Not used | | |
| T88 | Not used | | |
| T89 | Control unit | When the control unit is connected, a communication error is caused due to capacity shortage and communication is finished. | - |

## 8.20 T9#

| Error code | Category | Contents of error | How to correct |
|---|---|---|---|
| T90 | Multiple lines Line auto switch | TX line undetermined | Data may have been transmitted with no line specified when "No" is selected for TX-Line Auto Switch Setting. Specify the line to be used to send. |
| T91 | Multiple lines Line auto switch | TX line undetermined | Data may have been transmitted with an illegal line specified. Specify a different line and transmit the data. |
| T92 | Not used | | |
| T93 | Not used | | |
| T94 | Not used | | |
| T95 | Call control | When called, short disconnection of LOOP current was detected during a call | - |
| T96 | Not used | | |
| T97 | Transfer | Transmission request was received with no FAX board installed. * | - |
| T98 | | Transmission request of images that cannot be transmitted were received. (Color images) * | - |
| T99 | Call control | Remote stations number is deleted while waiting for abbreviated or one-touch redialing (redial / transmission / polling reception) * | - |

*: The corresponding error code is not displayed on the control panel even if the error occurs.

## 8.21 R0#

| Error code | Category | Contents of error | How to correct |
|---|---|---|---|
| R00 | Reception | DCS was not received within 35 seconds (T1 over) | The dialed telephone number may be incorrect. |
| R01 | | T1 timeout after EOM sending | - |
| R02 | | DCN reception in DCS waiting | The line may be disabled because the user on the remote station disconnected it. |
| R03 | | Unexpected command reception in DCS waiting | - |
| R04 | | FIF error of DCS | - |
| R05 | Not used | | |
| R06 | Not used | | |
| R07 | Reception | Image information does not come in image information waiting | The line may be disabled because the user on the remote station disconnected it. |
| R08 | | CD OFF while receiving image information | |
| R09 | | DCN reception in post message waiting | |

## 8.22 R1#

| Error code | Category | Contents of error | How to correct |
|---|---|---|---|
| R10 | Reception | Unexpected command reception in post message waiting | - |

| Error code | Category | Contents of error | How to correct |
|---|---|---|---|
| R11 | | Command was not received which waiting for post message | The line may be disabled because the user on the remote station disconnected it. |
| R12 | | Timeout during EOL-EOL | - |
| R13 | Not used | | |
| R14 | Not used | | |
| R15 | Not used | | |
| R16 | Not used | | |
| R17 | Not used | | |
| R18 | Reception | Resource check error (line disconnected due to ongoing communication) | Space in the hard disk may become short. Unnecessary data should be deleted to secure the space in the hard disk. |
| R19 | Not used | | |

## 8.23 R2#

| Error code | Category | Contents of error | How to correct |
|---|---|---|---|
| R20 | Reception | Line disconnection by receive reject function | Call was received from a user who is in the register of addresses to be rejected. |
| R21 | CUG reception | No match of password in the closed network RX setting | Check the password. |
| R22 | | No password received in the closed network RX setting | Check the setting of closed network RX. |
| R23 | Not used | | |
| R24 | ECM reception | RR-RNR repeats for 2 minutes | - |
| R25 | | Command was not received while waiting for responses to RNR | - |
| R26 | | Unexpected command was received while waiting for responses to RNR | - |
| R27 | | DCN reception while waiting for responses to RNR | - |
| R28 | | The counter is abnormal of the post messages received (PC/BC). | - |
| R29 | | Timeout (35 seconds) between frames occurred | - |

## 8.24 R3#

| Error code | Category | Contents of error | How to correct |
|---|---|---|---|
| R30 | Not used | | |
| R31 | Not used | | |
| R32 | Reception | Line disconnected because there is no appropriate confidential user box while automatic user box generation is inhibited. | Confidential box No. received from the remote station may be incorrect. |
| R33 | | DIS reception to DTC (German specifications only) | - |
| R34 | F code confidential reception | PWD was received when SUB was received. | - |
| R35 | Not used | | |
| R36 | Not used | | |
| R37 | V34 | CS2 is not turned to ON. | - |
| R38 | | No change in V34 modem and status | - |
| R39 | Not used | | |

## 8.25 R4#

| Error code | Category | Contents of error | How to correct |
|---|---|---|---|
| R40 | When called | Soft error when called | - |
| R41 | Not used | | |
| R42 | Not used | | |
| R43 | Not used | | |
| R44 | Not used | | |
| R45 | Reception | Phase C timeout (NonECM reception only) | - |

| Error code | Category | Contents of error | How to correct |
|---|---|---|---|
| R46 | Not used | | |
| R47 | Not used | | |
| R48 | Not used | | |
| R49 | Reception | DCN reception while waiting for image information | The line may be disabled because the user on the remote station disconnected it. |

### 8.26 R5#

| Error code | Category | Contents of error | How to correct |
|---|---|---|---|
| R50 | Reception | No. of error lines exceeds. | The line may be in trouble. Check the line noise. |
| R51 | Reception | The FAX board does not respond during reception | The line may be in trouble. Check the line noise. |
| R52 | Not used | | |
| R53 | Not used | | |
| R54 | Not used | | |
| R55 | Not used | | |
| R56 | Not used | | |
| R57 | Not used | | |
| R58 | Not used | | |
| R59 | Not used | | |

### 8.27 R6#

| Error code | Category | Contents of error | How to correct |
|---|---|---|---|
| R60 | Reception | Reception image error (RTN/PIN sending) | The line may be in trouble. Check the line noise. |
| R61 | Not used | | |
| R62 | Not used | | |
| R63 | Reception | Three continuous CRP signal reception | - |
| R64 | Not used | | |
| R65 | Not used | | |
| R66 | SEP polling | SEP polling transmission request was received without SEP polling transmission ability | - |
| R67 | SUB reception | SUB was directed without SUB reception ability | - |
| R68 | Not used | | |
| R69 | ECM reception | Communications are cut when EOR is received. | The line may be in trouble. Check the line noise. |

### 8.28 R7#

| Error code | Category | Contents of error | How to correct |
|---|---|---|---|
| R70 | ECM reception | Decode error occurred in ECM | - |
| R71 | Reception | RTC detection error (No. of EOL is smaller than FP.) | - |
| R72 | | Long original larger than the allowable value is received. | Longer original than specified is received from the remote station. |
| R73 | | Modem response waiting T.0 (60 seconds) | - |
| R74 | | Reception byte size error | - |
| R75 | V34 | V34 signal sending error | - |
| R76 | | Unexpected command was received in V34 mode phase C reception | - |
| R77 | Reception | Codec control middle ware error | - |
| R78 | | Codec control software error | - |
| R79 | | Job control soft error during reception | - |

### 8.29 R8#

| Error code | Category | Contents of error | How to correct |
|---|---|---|---|
| R80 | Not used | | |
| R81 | Not used | | |

| Error code | Category | Contents of error | How to correct |
|---|---|---|---|
| R82 | Not used | | |
| R83 | Not used | | |
| R84 | Not used | | |
| R85 | - | R-ISW request received when a machine is running in case of either reserved job exists, image exists in memory, or jam happened. | - |
| R86 | Not used | | |
| R87 | Not used | | |
| R88 | Not used | | |
| R89 | Not used | | |

## 8.30 R9#

| Error code | Category | Contents of error | How to correct |
|---|---|---|---|
| R90 | Not used | | |
| R91 | Not used | | |
| R92 | Turnaround | When the turnaround function is not provided, the line is disconnected if a turnaround order (DTC) is received. | - |
| R93 | F-code reception | Unsatisfactory conditions for confidential RX request | Check the Confidential password. |
| R94 | | Unsatisfactory conditions for relay request | Check the Relay password. |
| R95 | | Unsatisfactory conditions for forwarding request | - |
| R96 | | Confidential box number specified by SUB is not valid. | Confidential box No. received from the remote station may be incorrect. |
| R97 | | Unsatisfactory conditions for PC-FAX RX request (Function, PW unmatching) | - |
| R98 | Not used | | |
| R99 | Others | Reception command was received from the whole control side before reception signals were detected. | - |

## 8.31 Other

| Error code | Category | Contents of error | How to correct |
|---|---|---|---|
| - | Others | Despite the FAX board is installed in line 2, FAX (line 2) of [Service Mode] -> [System 2] -> [Option Board Status] is "Unset", if it is set to When the main body is in the sleep mode, line 1 can not receive faxes. | • When using the line 2, make sure that the FAX (system) for line 2 is set up correctly.<br>• When not using the line 2, remove all wirings of the FAX board for line 2. |
| - | | When the main body recovers from the sleep mode while receiving a fax, the ring tone is generated more than the set number of times. (2 to 3 times) | This error is avoidable with any one of the following settings.<br>• Set [Administrator Settings] -> [System Settings] -> [Power Supply/Power Save Settings] -> [Power Consumption in Sleep Mode] to “Disabled”.<br>• Set [Administrator Settings] -> [Fax Settings] -> [Line Parameter Setting] -> [Number of RX Call Rings] to “0 x”. |

# 9. DIAGNOSTIC CODES

## 9.1 Outline

- The diagnostic code is a 22-digit hexadecimal code indicating a communication conditions and status.
- The diagnostic code is printed on the activity report.
- The purpose of the diagnostic code is to obtain detailed information of communication results and conditions so as to analyze communication troubles.

## 9.2 Explanation

### 9.2.1 The diagnostic code

| XX | XX | XX | XX | XX | XX | XX | XX | XX | XX | XX | XX | XX | XX | XX | XX | XX | XX | XX | XX | XX | XX |
|---|---|---|---|---|---|---|---|---|---|---|---|---|---|---|---|---|---|---|---|---|---|
| (1) | (2) | (3) | (4) | (5) | (6) | (7) | (8) | (9) | (10) | (11) | (12) | (13) | (14) | (15) | (16) | (17) | (18) | (19) | (20) | (21) | (22) |

### 9.2.2 Information of communication results and conditions

| Items | Description | | | | | | | |
|---|---|---|---|---|---|---|---|---|
| | bit7 | bit6 | bit5 | bit4 | bit3 | bit2 | bit1 | bit0 |
| (1) Types of call out / called | F network (Japan) | PSTN | Dial-in (Japan) | Telephone | Group | One-touch dialing | Abbreviated dialing | Key pad dialing |
| (2) Communication mode | Sending | Error page resending | Forwarding transmission | Polled transmission | Receiving | Recovery transmission | Called turnaround | Polling RX |
| (3) Applied function specification | Mixed size transmission All pages/ cover | Frame erasure transmission | Book mode transmission | 2in1 transmission | Original size appointing TX | Upside down | Special scanning non standard/ Zfold/Long | (Not used) |
| (4) One-time communication parameter specification | Timer TX | (Not used) | CSRC | PC-Fax transmission (RX/V2) | V.34 appoint transmission | F-code transmission | ECM specification TX | International mode transmission |
| (5) Communication type | Relay | Confidential | Manual transmission | Bulletin | Line used (line 1 to 4) | | | |
| (6) H_RES specification 1 (HR) | 400 dpi | 300 dpi | 200 dpi | (Not used) | 16 pels/mm | (Not used) | 8 pels/mm | (Not used) |
| (7) H_RES specification 2 (HR) | (Not used) | (Not used) | (Not used) | (Not used) | (Not used) | (Not used) | (Not used) | 600 dpi |
| (8) V_RES specification 1 | 400 dpi | 300 dpi | 200 dpi | 100 dpi | 15.4 l/mm | (Not used) | 7.7 l/mm | 3.85 l/mm |
| (9) V_RES specification 2 | (Not used) | (Not used) | (Not used) | (Not used) | (Not used) | (Not used) | (Not used) | 600 dpi |
| (10) Coding specification | (Not used) | (Not used) | (JPEG) | (JBIG) | MMR | MR | MH | THRU |
| (11) Original length specification | (Not used) | (Not used) | (Legal) | (Letter) | A3 | B4 | A4 | (Not used) |
| (12) Original length specification | (Not used) | No limits | (Legal) | (Letter) | (Not used) | B4 | A4 | (Not used) |
| (13) Speed specification 0 | (Not used) | (Not used) | (Not used) | V.29-96 | V.29-72 | (Not used) | V.27-48 | V.27-24 |
| (14) Speed specification 1 | V.17-144 | V.17-120 | V.17-96 | V.17-72 | (V.33-144) | (V.33-120) | (V.33-96) | (V.33-72) |
| (15) Speed specification 2 | V.34-192 | V.34-168 | V.34-144 | V.34-120 | V.34-96 | V.34-72 | V.34-48 | V.34-24 |
| (16) Speed specification 3 | (Not used) | (Not used) | V.34-336 | V.34-312 | V.34-288 | V.34-264 | V.34-240 | V.34-216 |
| (17) MSLT specification | (Not used) | (Not used) | (Not used) | (Not used) | (Not used) | MSLT of resolution shown as vertical RES | | |
| (18) Communication parameter specification | ECM frame size 0: 256 / 1: 64 | ECM | DIAG (CSRC) | (BFT) | (BTM) | PWD | SEP | SUB |
| (19) Remote station coding specification | (Not used) | (Not used) | (JPEG) | (JBIG) | MMR | MR | MH | THRU |
| (20) Remote station length specification | (Not used) | (Not used) | (Legal) | (Letter) | A3 | B4 | A4 | (Not used) |
| (21) Remote station length specification | (Not used) | No limits | (Legal) | (Letter) | (Not used) | B4 | A4 | (Not used) |
| (22) Remote station communication | (Not used) | ECM | DIAG (CSRC) | (BFT) | (BTM) | PWD | SEP | SUB |

- (Not used): bit is set to 0.

# 10. NETWORK FAX ERROR CODE

- When there occurs any trouble with this machine, the error screen is displayed. And on this error screen, the following error message is shown. Take a necessary step referring to the table given below.

## 10.1 Error code list of the transmission system

| Error code | Category | Contents of error | Redial | Corrective action |
|---|---|---|---|---|
| N10 | Connection error | Server connection error | No | • Check the condition of the other party machine.<br>• Check the network setting of local machine.<br>• Ask the network administrator if the network is operating normally. |
| N11 | Connection error | Connection declined by the other party machine | No | Reception is declined. Check the condition of the other party machine. |
| N12 | Connection error | Disconnection of the line | Yes | Check to see if there occurs any abnormal condition with the network, such as the disconnection of a cable. |
| N13 | Connection error | No response received from the network | No | • Check the condition of the other party machine.<br>• Check the network setting of local machine.<br>• Ask the network administrator if the network is operating normally. |
| N14 | Connection error | Mail delivery error | No | Check the condition of the other party machine. Send it again after waiting for a while. |
| N15 | Remote reset | Connection reset by the other party machine | Yes | Check the condition of the other party machine. Send it again after waiting for a while. |
| N16 | Remote busy | Remote machine is busy | Yes | Check the condition of the other party machine. Send it again after waiting for a while. |
| N17 | LAN access | Communication time out | Yes | Check the condition of the other party machine. Send it again after waiting for a while. |
| N18 | Network error | Network error | No | • Check the each settings.<br>• Check to see if there occurs any abnormal condition with the network, such as the disconnection of a cable.<br>• After turning off and on the main power switch, send it again. |
| N20 | Memory error | Memory overflow | No | • The memory is full.<br>• Check to see if there is any other job being handled.<br>• With the number of transmission sheets reduced or the resolution for read reduced, send it again. |
| N21 | HDD error | HDD error | No | • HDD is full.<br>• Delete unnecessary files.<br>• With the number of transmission sheets reduced or the resolution for read reduced, send it again. |
| N22 | Conversion error | Conversion error | No | After turning off and on the main power switch, send it again. |
| N25 | Memory overflow | Memory overflow | No | • The memory is full.<br>• Check to see if there is any other job being handled.<br>• With the number of transmission sheets reduced or the resolution for read reduced, send it again. |
| N35 | Forward TX | A request for transmission has been received with the NetFAX with the Function Settings OFF. (A request for transfer of the IP address FAX while the IP Address FAX function is being OFF in the service mode.) | No | - |
| N36 | | A request has been received for transmission of images that cannot be sent. | No | - |

## 10.2 Error code list of the reception system

| Error code | Category | Contents of error | Corrective action |
|---|---|---|---|
| N50 | SMTP reception | SMTP reception error | When the SMTP reception does not start in 60 minutes after connection for an incoming call, this error may be resulted. Ask the sender to send it again. |
| N51 | Decode | In excess of the length specified for reception | Ask the sender to send it again after the length of the text being reduced. |
| N52 | Decode | In excess of the number of pages specified for reception | Ask the sender to send it again after the number of text sheets being reduced. |

| Error code | Category | Contents of error | Corrective action |
|---|---|---|---|
| N53 | Decode | File error | Ask the sender to send it again in a correct file format as shown below.<br>• Internet Fax: TIFF<br>• IP Address Fax: PDF or TIFF |
| N54 | Decode | Decode error | The data has been received in an incorrect format. Ask the sender to send it again in a correct format. |

# 11. Open API RELATED TROUBLE

## 11.1 Outline

- Through the Certification Management System provided by OpenAPI, if error is found in communication between the machine and interacting applications developed by company other than KM, an error message is displayed.

## 11.2 Types of Trouble

- The Certification Management System provided by OpenAPI certificates and manages communication between main body and non-KM applications that run on the computer connected to the machine. If trouble is detected, the trouble message is displayed on the control panel of the machine or the screen of the computer on which the applications run.
  Trouble messages displayed on the control panel of the main body and actions are described below.

**NOTE**

- **A message that appears on the computer screen may be different depending on the appliacation being used for communication. The corresponding action may be different, so contact the application vendor for an appropriate action.**

**<Examples of trouble messages>**

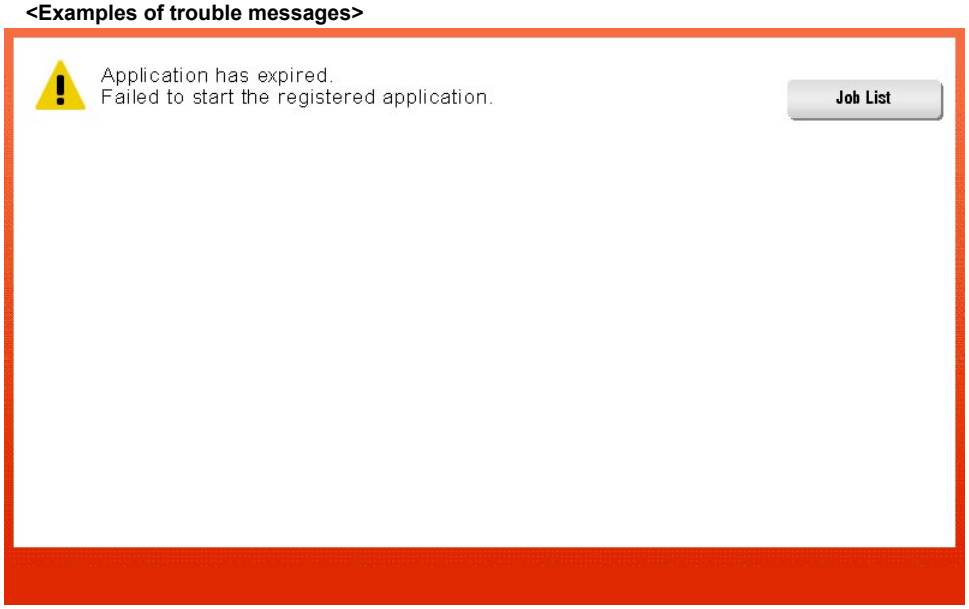


## 11.3 Solution

- The below describes the OpenAPI certification related trouble messages displayed on the control panel of the main body and actions, dividing them by possible situation.

### 11.3.1 When using an application

| No. | Symptom and message | Action |
|---|---|---|
| 1 | When starting an application, the following message is displayed: Application has expired. Failed to start the registered application. | 1. In [Administrator Settings] -> [System Settings] -> [Date/ Time Settings], check that the date and time that is set is same as the actual date and time. If a wrong date and time is set, correct it.<br>2. Contact the application vendor and obtain a new Solution Key (or the application software itself). Using it, perform the steps below.<br>1) Delete the application.<br>2) Using the Solution Key (or the application software itself), register the application again. |
| | When starting the machine, the following message is displayed: The Enhanced Server Authentication application has expired. Change the User Authentication method to one other than Enhanced Server Authentication. | |
| 2 | When starting an application, the following message is displayed: Failed to start the registered application. Please contact your service representative. | In [Service Mode] -> [System1] -> [Marketing Area], change the marketing area of the machine to the one that was selected when the application was registered. |
| | When starting the machine, the following message is displayed: The enhanced server authentication application cannot be used. Please contact your service representative. | |

| No. | Symptom and message | Action |
|---|---|---|
| 3 | In the screen saver application, after a time set, the screen saver does not work. | 1. In [Administrator Settings] -> [System Settings] -> [Date/ Time Settings], check that the date and time that is set is same as the actual date and time. If a wrong date and time is set, correct it.<br>2. Contact the application vendor and obtain a new Solution Key (or the application software itself). Using it, perform the steps below.<br>1) Delete the application.<br>2) Using the Solution Key (or the application software itself), register the application again.<br>3. In [Service Mode] -> [System1] -> [Marketing Area], change the marketing area of the machine to the one that was selected when the application was registered. |

### 11.3.2 After rewriting the firmware of the machine

| No. | Symptom and message | Action |
|---|---|---|
| 1 | When starting an application, the following message is displayed: Failed to start the registered application. Please contact your service representative. | After deleting the application in question, register the application again. |
| | When starting the machine, the following message is displayed: The enhanced server authentication application cannot be used. Please contact your service representative. . | |
| | In the screen saver application, after a time set, the screen saver does not work. | |

# 12. TROUBLES THAT DO NOT DISPLAY THE TROUBLE CODE

## 12.1 Machine is not energized at all (DCPU operation check)

### 12.1.1 Contents

| | |
|---|---|
| Trouble type | Machine is not energized at all |
| Rank | - |
| Trouble detection condition | - |
| Trouble isolation | - |
| Relevant electrical parts | • Main power switch (SW1)<br>• MFP board (MFPB)<br>• DC power supply (DCPU) |

### 12.1.2 Procedure

| Step | Check item | Location of electrical component | Result | Action |
|---|---|---|---|---|
| 1 | Is a power voltage supplied across CN1-1 and 2 on DCPU? | 19-T | NO | Check the WIRING from the wall outlet to SW1 to CN1. |
| 2 | Are the fuses on DCPU conducting? | - | NO | Replace DCPU |
| 3 | Is DC5 V being output from CN6-5 on DCPU? | 19-R | NO | Replace DCPU |
| 4 | Is DC24 V being output to CN7-3 on DCPU? | 19-R | NO | • Check the WIRING from the wall MFPB to DCPU.<br>• Replace DCPU<br>• Replace MFPB |
| 5 | The LED on MFPB is blinking? | - | NO | Replace MFPB |
| 6 | Is DC24 V being output to CN7-1 on DCPU? | 19-R | NO | Replace DCPU |

• N.1. bizhub C368/C308/C258

## 12.2 Fusing heaters do not operate

### 12.2.1 Contents

| | |
|---|---|
| Trouble type | Fusing heaters do not operate |
| Rank | - |
| Trouble detection condition | - |
| Trouble isolation | - |
| Relevant electrical parts | • Main power switch (SW1)<br>• Right door switch (SW3)<br>• DC power supply (DCPU)<br>• MFP board (MFPB)<br>• Fusing unit |

### 12.2.2 Procedure

| Step | Check item | Location of electrical component | Result | Action |
|---|---|---|---|---|
| 1 | Is a power voltage supplied across CN8-5 on DCPU? During this time, the right door should be closed. | 17-R | NO | Check wiring from power outlet to SW1 to CN8 to SW3. |
| 2 | Is the power source voltage applied across MFPB CN13E-6, 9? | 11-E | YES | Replace the fusing unit. |
| | | | NO | Replace DCPU.<br>Replace MFPB. |

• N.1. bizhub C368/C308/C258

## 12.3 Power is not supplied to option

### 12.3.1 DF-704/DF-629

#### (1) Procedure

| Step | Check item | Location of electrical component | Result | Action |
|---|---|---|---|---|
| 1 | Is DC24 V being output from CN1DF-1 on DF-701/DF-624? | 15-I | YES | Malfunction in DF-704/DF-629. |
| 2 | Is DC24 V being output to CN4-1 on DCPU? | 18-R | NO | Check wiring from DCPU to DF-704/DF-629. |
| 3 | Is the fuse on DCPU conducting? | - | YES | Replace DCPU. |
| | | | NO | Malfunction in DF-704/DF-629. |

• N.1. bizhub C368/C308/C258

- N.2.2 DF-704
- N.2.1 DF-629

### 12.3.2 PC-110/PC-210/PC-410

#### (1) Procedure

| Step | Check item | Location of electrical component | Result | Action |
|---|---|---|---|---|
| 1 | Is DC24 V being applied to CN65? | 23-D | NO | Malfunction in cabinet. |
| 2 | Is DC24 V being output to CN21E-1 on MFPB? | 23-E | NO | Check wiring from MFPB to CN21E to cabinet. |
| 3 | Is the fuse on DCPU conducting? | - | YES | Replace DCPU. |
| | | | NO | Malfunction in cabinet. |

- N.1. bizhub C368/C308/C258
- N.2.3 PC-110
- N.2.4 PC-210
- N.2.5 PC-410

### 12.3.3 FS-533/FS-534

#### (1) Procedure

| Step | Check item | Location of electrical component | Result | Action |
|---|---|---|---|---|
| 1 | Is DC24 V being applied to CN1FN? | 17-I | NO | Malfunction in finisher. |
| 2 | Is DC24 V being output to CN4-5 on DCPU? | 18-R | NO | Check wiring from DCPU to finisher. |
| 3 | Is the fuse on DCPU conducting? | - | YES | Replace DCPU. |
| | | | NO | Malfunction in finisher. |

- N.1. bizhub C368/C308/C258
- N.2.7 FS-533
- N.2.8 FS-534

# 13. OTHER TROUBLE

## 13.1 Firmware error warning

- Warning message: A firmware error occurred.
- While the enhanced security mode is enabled, if MFP is restarted by turning the main power switch OFF and ON or other operations, selftesting is performed internally. If the self-testing detects firmware error, this warning appears.

### 13.1.1 Action

1. Set Enhanced Security Mode to “OFF” in Administrator Settings and touch “OK.”
2. Turn OFF and ON the main power switch.
3. Check that the warning screen is not displayed.
4. Rewrite the firmware.
5. Set the Enhanced Security Mode.

## 13.2 HDD lock password error warning

### 13.2.1 Detection timing

- Warning message: Reset HDD Lock Password.
- There is a mismatch between the password registered in the HDD and that registered in the main body.
- Wrong machine type information is input.

### 13.2.2 Action

#### (1) Checking the machine type information

**NOTE**

- **Perform the following steps, if this malfunction occurs when the MFP board is replaced with a new one.**
- **Prepare a USB flash drive in which firmware data is recorded.**

1. Call the firmware update selection screen to the display.
   NOTICE
   - J.2. USB memory
2. Touch [Machine Type Select].
3. Check the setting values of [Machine] and [Type] and enter the correct setting values. For details, see “J.2.4 Entering the machine type information”.
4. Turn OFF and ON the main power switch. If a USB flash drive has been used, first remove the USB flash drive and then turn ON the main power switch.

#### (2) Re-registering the correct HDD Lock Password

1. Touch Menu.
2. Touch [Utility].
3. Touch [Administrator Settings].
4. Enter the administrator password and touch [OK].
5. Enter the currently set HDD Lock Password twice.
6. Touch [OK].
7. When the screen that indicates the completion of setting of the HDD Lock Password appears, turn OFF and ON the main power switch.

#### (3) Performing HDD Physical Format

1. Call the Service Mode to the screen.
2. Touch these keys in this order: [State Confirmation] -> [Memory/Storage Adjustment] -> [Format].
3. Touch [Physical Format].
4. Press the Start key.
5. When Physical Format is completed, turn OFF and ON the main power switch.

# 14. TROUBLESHOOTING OF i-Option

## 14.1 Structure of license management

- The functions available with i-Option can be activated by entering “License code” to the main body.
- License code is issued and controlled by License Management System (LMS).
  To prevent unauthorized use of the license code, each main body is identified individually so that the license code cannot be activated unless it matches with the authorized the main body.

## 14.2 License management information

- Since license code needs to identify each main body, it is issued using the serial number of main body and “unique value” that is generated inside the main body.
- The “unique value” is stored to the memory region on the MFP board and at the same time some parts of it are memorized by eMMC board and EEPROM. The activated function cannot be used unless the both figures conform.
  Since these figures are out of target of [Memory Data Backup], when any trouble occurs at either nonvolatile memory, “License Management Error” is generated due to discordance of the figures.

## 14.3 Error message

### 14.3.1 License management error

- When abnormal value is detected in the license management information that is stored to the MFP board, eMMC board or EEPROM, or some values are detected cleared, warning is issued to let the user know the abnormality.
- The abnormality is detected at the timing of start-up or restart due to any condition.
- When the abnormality is detected, the corresponding i-Option function cannot be used, other ordinal functions, however, such as copy, scanning, print or etc, can be used without interruption. (Error message is displayed on the Service Mode screen.)

#### (1) Example of error message

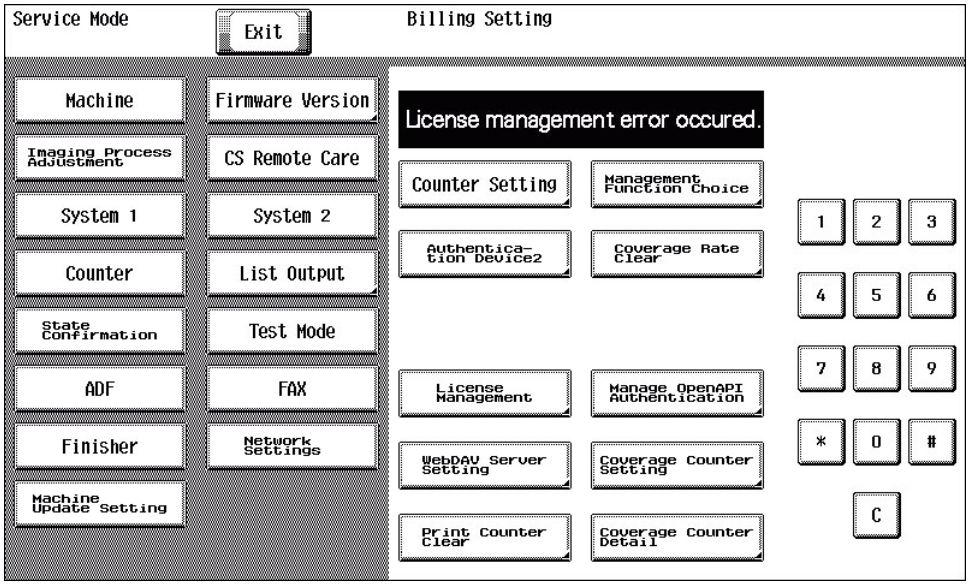


#### (2) Main reasons of trouble

- The following shows the possible trouble factors and their countermeasure.

| Board replacement | Countermeasure |
|---|---|
| When MFP board and eMMC board or EEPROM are replaced with the new ones at the same time. | Install firmware, follow the setup procedure. |
| When mounting the MFP board of the machine whose function(s) have already been activated and a new eMMC board or EEPROM. | Install firmware, then restore the data using restore procedure. |

# 15. IMAGE QUALITY PROBLEM

## 15.1 How to read element data

- As part of troubleshooting procedures, the numeric values set for “State Confirmation” available from “Service Mode” can be used to isolate the cause of the image problem.

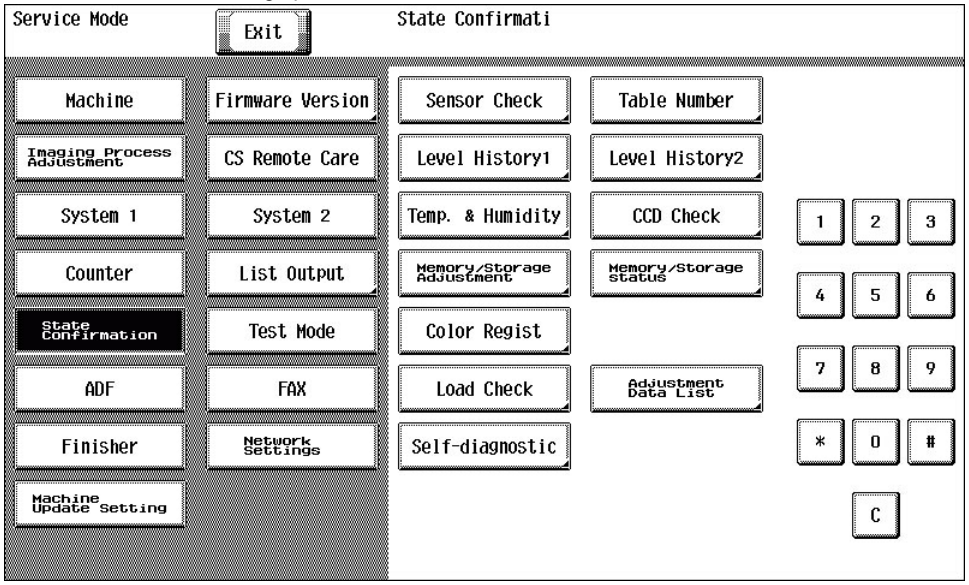


### 15.1.1 Table Number

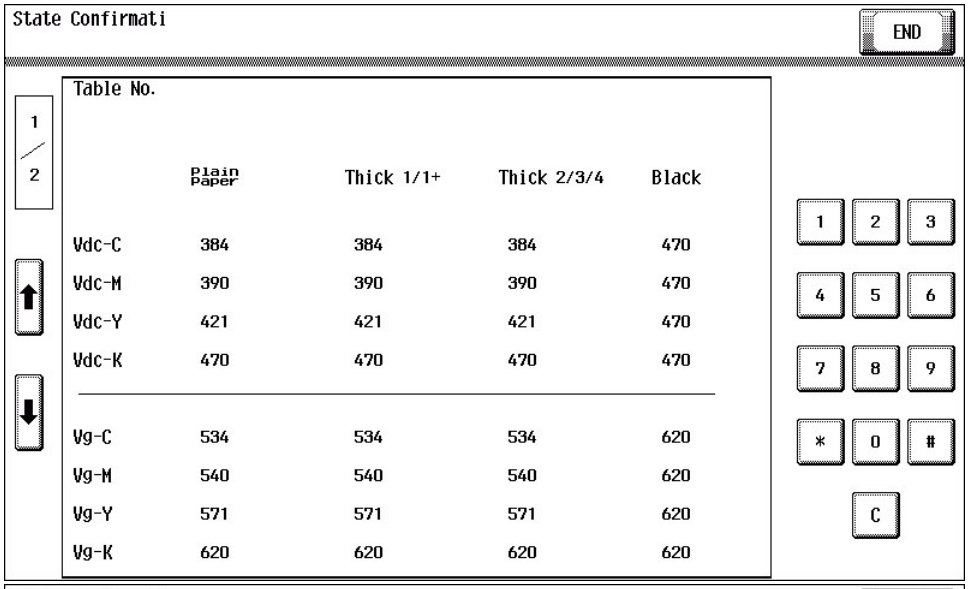


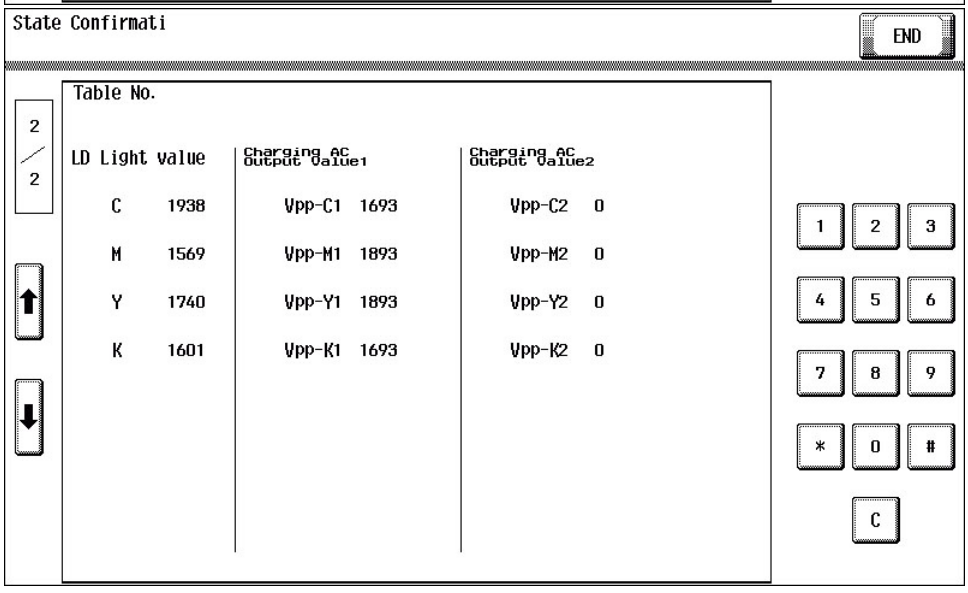


| | |
|---|---|
| Vdc-C | • Shows the developing bias value of toner when an image is produced. |

| | |
|---|---|
| Vdc-M<br>Vdc-Y<br>Vdc-K | • Standard values: around 300 V to 400 V (100 V to 800 V)<br>• The specific numeric values vary with different developing units. (The values incorporate corrections to match the proper density after image stabilization.)<br>* As a guide, the image density tends to be higher with large numeric values and lower with small numeric values.<br>• Relevant components: Developing unit, drum unit, high voltage unit (HV) |
| Vg-C<br>Vg-M<br>Vg-Y<br>Vg-K | • Shows the grid voltage value of each color of toner when an image is produced.<br>• Standard values: around 450 V to 550 V (200 V to 1000 V)<br>• The specific numeric values vary with different developing units. (The values incorporate corrections to match the proper density after image stabilization.)<br>* As a guide, the image density tends to be higher with large numeric values and lower with small numeric values.<br>• Relevant components: Developing unit, drum unit, high voltage unit (HV) |
| LD Light Value (C, M, Y, K) | • Shows the LD light value of each color of toner during print image formation.<br>• Standard values: around 1500 to 2200 (1400 to 3600)<br>• For your information, photoconductor durability tends to be aggravated and fine line width tends to be broader at higher values and characters tend to be faint at lower values.<br>• Relevant components: PH unit, drum unit |
| Charging AC Output Value1<br>Vpp-C1<br>Vpp-M1<br>Vpp-Y1<br>Vpp-K1 | • Shows the AC voltage value applied to the charging roller of each color of toner during print image formation.<br>• Standard values: around 1750 V to 1800 V (500 V to 2500 V)<br>• Relevant components: Drum unit, high voltage unit (HV) |
| Charging AC Output Value2<br>Vpp-C2<br>Vpp-M2<br>Vpp-Y2<br>Vpp-K2 | • Shows the current value applied to the charging roller of each color of toner during print image formation.<br>• Standard values: around 120 to 145 (0 to 350)<br>• Relevant components: Drum unit, high voltage unit (HV) |

### 15.1.2 Level History 1

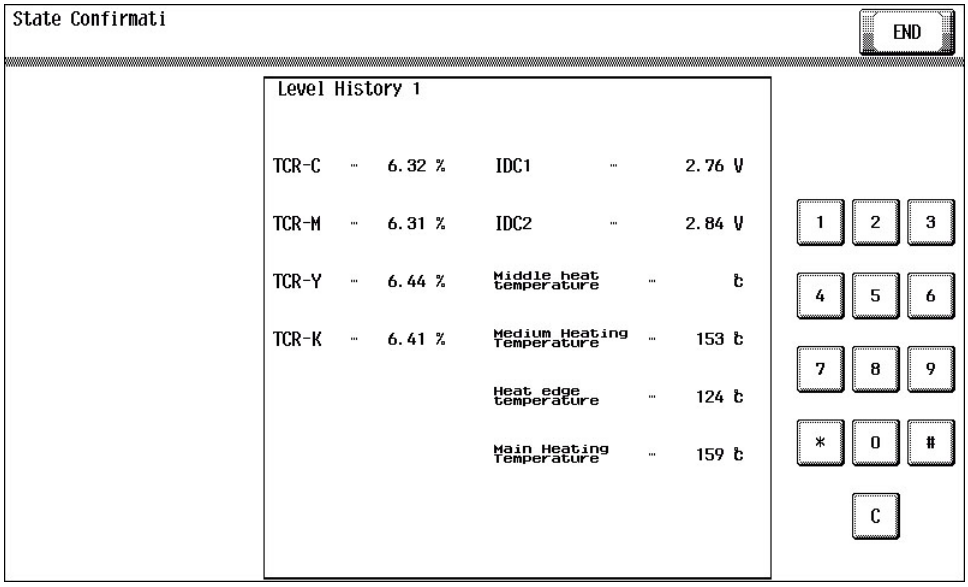


| | |
|---|---|
| TCR-C<br>TCR-M<br>TCR-Y<br>TCR-K | • Shows the T/C ratio. (in 0.01 % increments)<br>• Standard value: 5 to 8 %<br>• For your information, foggy background tends to occur at higher values and low image densities tend to occur at lower values.<br>• Relevant components: TCR sensor |
| IDC1<br>IDC2 | • Shows the IDC bare surface output value. (in 0.01 V increments)<br>• It should normally be around 3.0 V.<br>• The output range is 0 V to 3.4 V.<br>• Relevant components: IDC sensor, transfer belt unit |
| Middle heat temperature (not used)<br>Medium Heating Temperature<br>Heat edge temperature<br>Main Heating Temperature | • Shows the temperature of the fusing unit. (in 1 °C increments)<br>• Relevant components: Fusing unit |

### 15.1.3 Level History 2

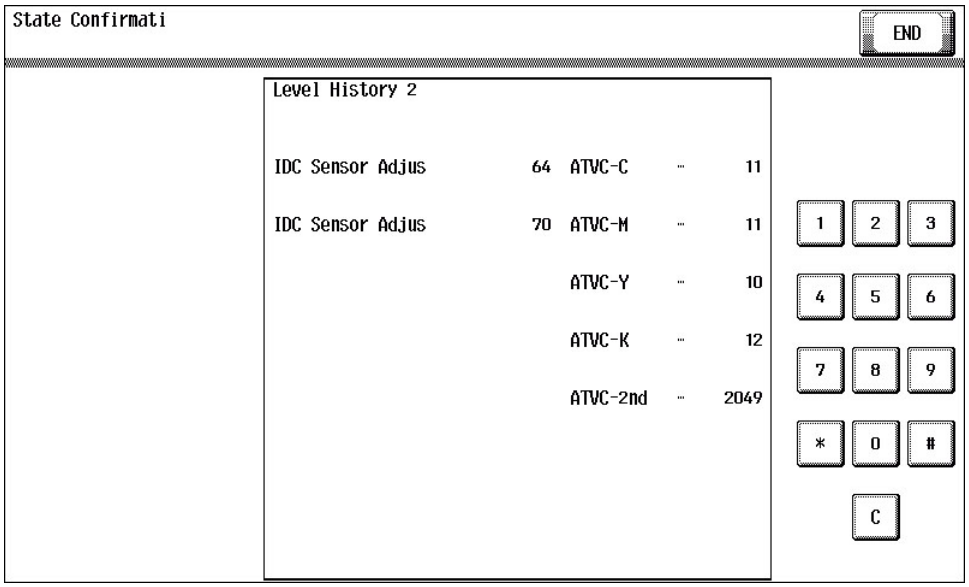


| | |
|---|---|
| IDC Sensor Adjust 1<br>IDC Sensor Adjust 2 | • Shows the IDC intensity adjustment value.<br>• It should normally be around 70.<br>• The range is 0 to 255.<br>• The value becomes greater as the transfer belt unit has been used more.<br>• Relevant components: IDC sensor, transfer belt unit |
| ATVC-C<br>ATVC-M<br>ATVC-Y<br>ATVC-K<br>ATVC-2nd | • Shows the latest ATVC level (which varies according to the paper type).<br>• ATVC-C: 8 µA to 23 µA (bizhub C368), 8 µA to 20 µA (bizhub C308)<br>• ATVC-M: 7 µA to 22 µA (bizhub C368), 7 µA to 19 µA (bizhub C308)<br>• ATVC-Y: 6 µA to 19 µA (bizhub C368), 6 µA to 17 µA (bizhub C308)<br>• ATVC-K: 8 µA to 24 µA (bizhub C368), 8 µA to 21 µA (bizhub C308)<br>• ATVC-2nd: 300 V to 5,000 V<br>• Relevant components: Transfer belt unit, High voltage unit (HV), 2nd transfer roller |

## 15.2 Troubleshooting procedure overview

### 15.2.1 Test pattern printing

- Following give an overview of a procedure to isolate a faulty spot of an image trouble using a test pattern.
- A faulty spot that is responsible for the image trouble is isolated by printing a test pattern to determine whether an image trouble is evident and determining which color of toner, Y, M, C, or K, has the trouble.

#### (1) Scanner system image trouble

- If an image trouble occurs during a copy cycle, use the image trouble that may be evident on the test pattern printed to determine whether the trouble is attributable to the scanner system or the printer system.
- If no image trouble occurs on a test pattern produced following a print cycle, the image trouble is determined to be attributable to the scanner system.

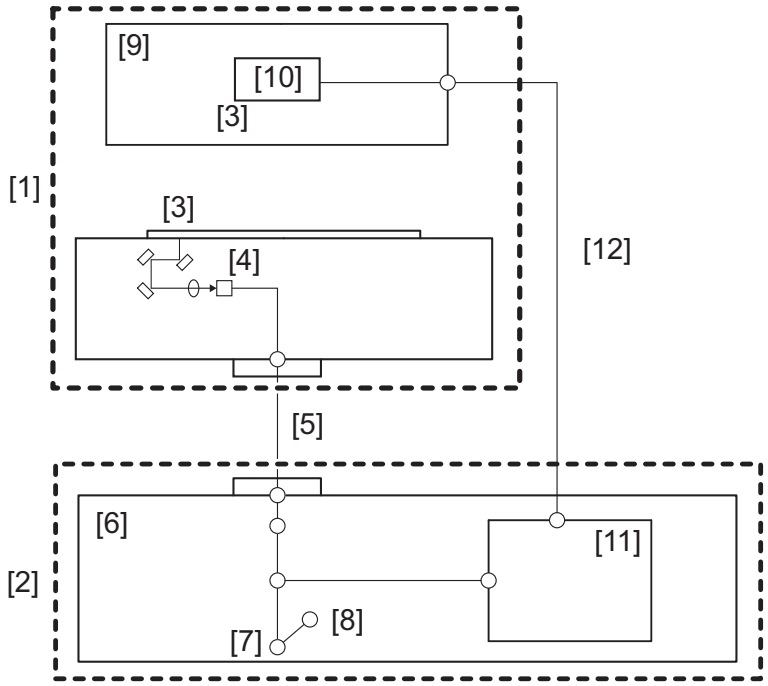


| | | | |
|---|---|---|---|
| [1] | Scanner system | [2] | Printer system |
| [3] | Document scan | [4] | CCD board (CCDB) |
| [5] | I/F cable (only front side when DF-629 or DF-704 is installed) | [6] | MFP board (MFPB) |
| [7] | PH relay board (PHRYB) | [8] | Print output |
| [9] | DF-629/DF-704 | [10] | CIS module (CIS) |
| [11] | Dual scan image processing board (DSIPB) | [12] | I/F cable (only rear side when DF-704 is installed) |

**(2) Printer system image trouble**

- If the image trouble is attributable to the printer system, determine whether the image trouble occurs with one to three colors, or with four colors of Y, M, C, and K.
- If the same image trouble occurs with four colors, the image trouble is determined to be that of the four-color system.

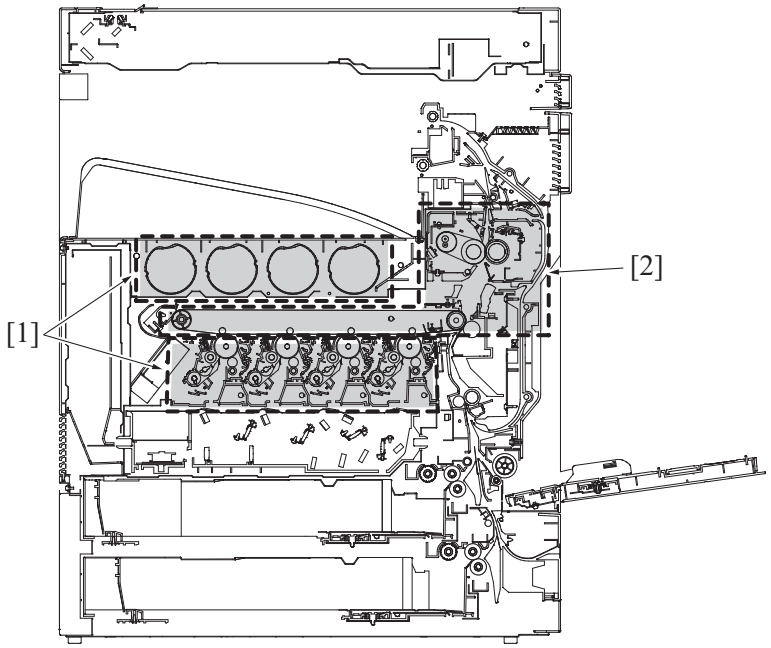


| | | | |
|---|---|---|---|
| [1] | Faulty spot responsible for an image trouble of the single- to- three-color system | [2] | Faulty spot responsible for an image trouble of the four-color system |

### 15.2.2 Self-diagnostic function

Following give an overview of the self-diagnostic function.

- The self-diagnostic function makes a self-diagnosis of printed-wiring boards and electrical parts to determine whether they are fully operational.
- The self-diagnostic procedure is started as follows: select [Service Mode] -> [State Confirmation] -> [Self-diagnostic] -> [Check All]; then, press the start key.

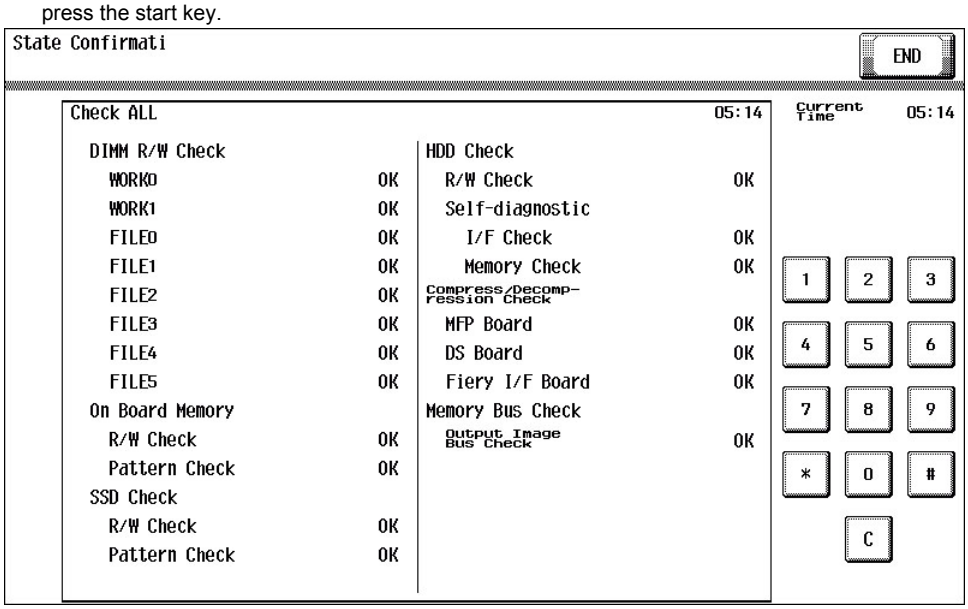


- When the self-diagnostic procedure is completed, "OK" or "NG" appears on the display.
- If "NG" appears, check the corresponding printed-wiring board for proper connector connection or replace a faulty board with a good one.

| Check name | Cause of "NG" display | Corrective action |
|---|---|---|
| DIMM R/W Check | DIMM improperly installed, faulty DIMM, faulty CPU of MFP board | Reinstall the DIMM, replace the DIMM, replace the MFP board |
| On Board Memory Check | Faulty MFP board, run-down battery | Replace the MFP board |
| SSD Check | eMMC board improperly installed, faulty eMMC board, faulty MFP board | Reinstall the eMMC board, replace the eMMC board, replace the MFP board |
| HDD Check | Broken HDD cable, damaged HDD, faulty MFP board | Replace the HDD cable, replace the HDD, replace the MFP board |
| Compress/Decompression Check | Faulty MFP board, improperly connected dual scan image processing board (DSIPB) | Reinstall the dual scan image processing board, replace the dual scan image processing board, replace the MFP board |
| Memory Bus Check: Output image | Improperly connected MFP board, faulty MFP board | Replace the MFP board |

## 15.3 Corrective action procedure

### 15.3.1 Image trouble sample illustrations

**NOTE**

- **Sample illustrations schematically show exemplary image troubles that occur when the images are printed on A3-size paper.**
- **The arrow in the exemplary image troubles indicates the paper feeding direction.**

White line 1, White band 1



Color line 1, Color band 1

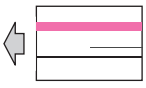

White line 2, White band 2



Color line 2, Color band 2

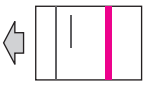

Uneven density 1

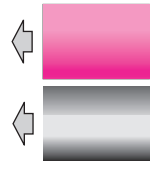

Uneven density 2

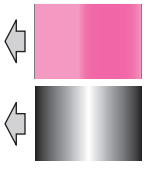

Faint image, Low image density




Gradation reproduction failure

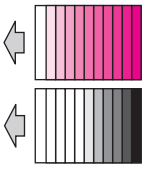

Color reproducibility error



Incorrect color image registration

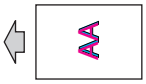

Foggy background

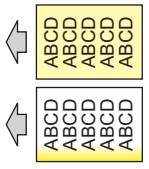


Void area



White spot

Color spot

Blurred image

Back marking

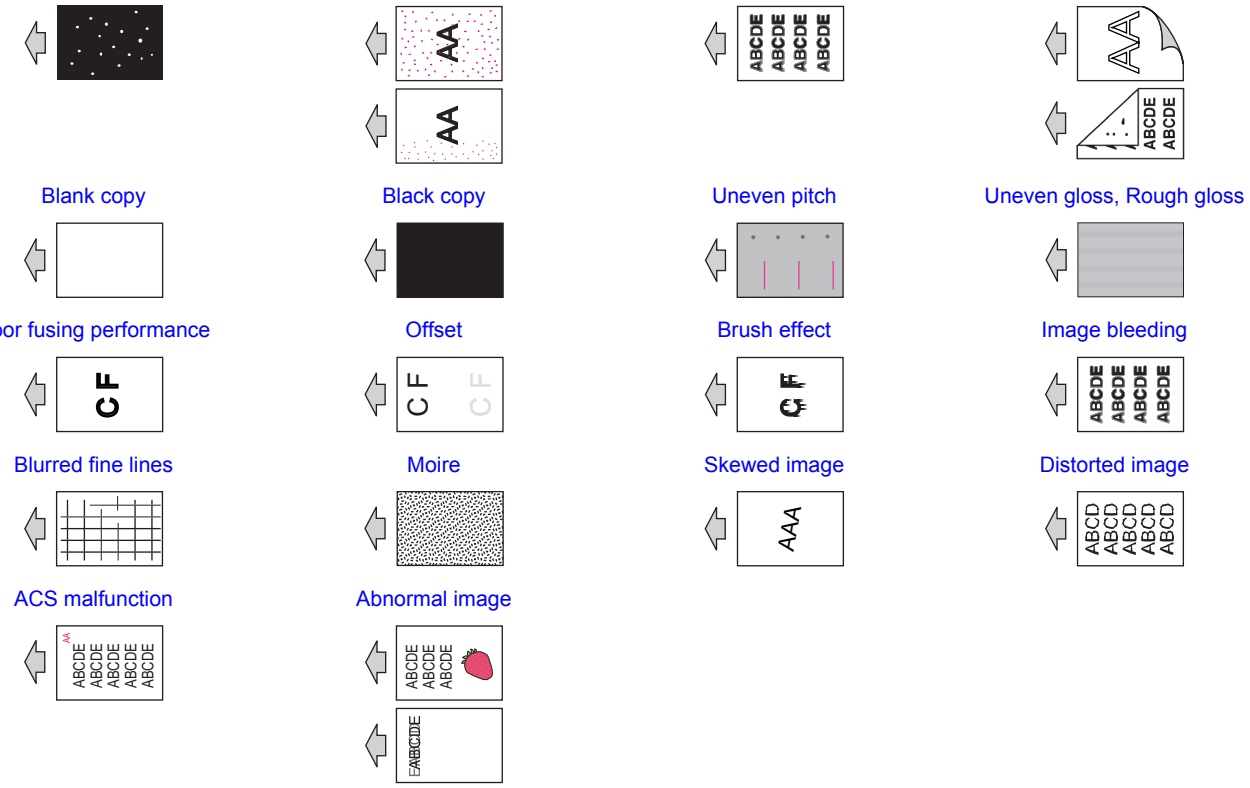


### 15.3.2 White line 1, White band 1, Color line 1, Color band 1

#### (1) Typical faulty images

The arrow in the exemplary image troubles indicates the paper feeding direction.

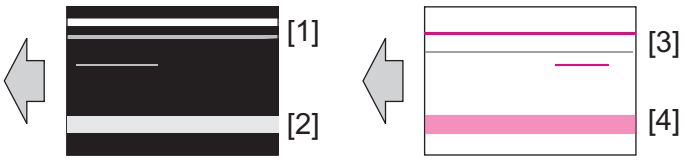


| | | | |
|---|---|---|---|
| [1] | White line | [2] | White band |
| [3] | Color line | [4] | Color band |

#### (2) Initial troubleshooting procedure

| Step | Section | Check item | Result | Action |
|---|---|---|---|---|
| 1 | Paper Setting | The paper to be used for printing does not match the paper type and size of paper setting selected on the machine. | YES | Make the paper setting again on the machine. |
| 2 | Service Mode -> Stabilizer | Select [Service Mode] -> [Imaging Process Adjustment] -> [Stabilizer] -> [Stabilization Only] and the image trouble is eliminated. | NO | Go to the next step. |
| 3 | Service Mode -> Gradation Adjust | Select [Service Mode] -> [Imaging Process Adjustment] -> [Gradation Adjust] and the image trouble is eliminated. | NO | Go to the next step. |
| 4 | Image check | • Select [Service Mode] -> [Test Mode] -> [Halftone Pattern]. Select "SINGLE", "HYPER", "Gradation", "1-Sided", "CMYK", and "Full Bleed", enter "64" for Density, and load tray 2 with A3 paper. Press the start key. This runs a print cycle for C, M, Y, and K in that order.<br>• Check the image after printing to determine which color causes the abnormal image. | 1 to 3 colors | Go to the 1-color troubleshooting procedure. |
| | | | 4 colors | Go to the 4-color troubleshooting procedure. |
| | | | Not available | Go to scanner troubleshooting procedure. |

### (3) 1-color troubleshooting procedure

| Step | Section | Check item for the faulty color | Result | Action for the faulty color |
|---|---|---|---|---|
| 1 | Service Mode -> Table Number | Select [Service Mode] -> [State Confirmation] -> [Table Number]. The measured value is close to the standard value.<br>• Developing bias: Vdc-C, Vdc-M, Vdc-Y, Vdc-K: close to the standard value of 300 V to 400 V (100 V to 800 V)<br>• Grid voltage: Vg-c, Vg-M, Vg-Y, Vg-K: close to the standard value of 450 V to 550 V (200 V to 1000 V) | NO | • Check the high voltage unit, developing unit, and the drum unit for wiring and connection.<br>• Replace the high voltage unit. |
| 2 | Write section | Sharp white line or colored line is blurry. | YES | Clean the PH window. |
| 3 | Charging section | Foreign matter on charging roller. | YES | Lightly wipe the surface clean of foreign matter using hydro-wipe (65AA-99##).<br>Note: Do not apply a strong force to the surface of the charging roller, as doing so can damage the surface. |
| 4 | Photo conductor section | There is a positive contact between the electrostatic charger application terminals and the high voltage unit connection terminals. | NO | Clean or correct the terminal. |
| 5 | Developing section | There is a positive contact between the developing bias application terminals and the high voltage unit connection terminals (Y: B4; M: B3; C: B2; K: B1). | NO | Clean or correct the terminal. |
| 6 | Photo conductor section | Scratches on photo conductor. | YES | • Clean.<br>• Replace the drum unit. |
| 7 | Photo conductor section | Toner line or dirt on photo conductor. (improper cleaning) | YES | Replace the drum unit. |
| 8 | Photo conductor section | Faint lines evident on the entire surface as if the surface were brushed off. | YES | • Select [Service Mode] -> [Counter] -> [Life] and check the counter value of the Drum Unit.<br>• Replace the drum unit having the greatest counter value with a new one. (Not the drum unit of the color that has developed the lines, but the drum unit having the greatest counter value) |
| 9 | 1st transfer section | There is a positive contact between the transfer belt application terminals and the high voltage unit connection terminals (Y: T1-4; M: T1-3; C: T1-2; K: T1-1). | NO | Clean or correct the terminal. |
| 10 | 1st transfer section | Scratches or dirt on 1st transfer roller. | YES | • Clean.<br>• Replace the transfer belt unit. |
| 11 | Developing section | Toner bristles not even on the developing roller, resulting in a line or band. | YES | Replace developing unit. |
| | | | NO | Replace the PH unit. |

### (4) 4-color troubleshooting procedure

| Step | Section | Check item | Result | Action |
|---|---|---|---|---|
| 1 | Paper path | There is dirty or foreign matter on paper path. | YES | Check and clean the paper path including the duplex section. |
| 2 | Transfer belt unit | Lines that can be removed by cleaning are evident on the transfer belt. (improper cleaning) | YES | • Check and clean the cleaning blade.<br>• Replace the transfer belt unit. |
| 3 | Transfer belt unit | Dirt, scratches, or foreign matter on the transfer belt. | YES | • Clean.<br>• Replace the transfer belt unit. |
| 4 | Transfer belt unit | There is a positive contact between the transfer belt application terminals and the high voltage unit connection terminals (Y: T1-4; M: T1-3; C: T1-2; K: T1-1). | NO | Clean or correct the terminal. |
| 5 | 2nd transfer section | Dirt or foreign matter on the 2nd transfer roller. | YES | • Remove the foreign matter.<br>• Replace the transfer roller unit. |
| 6 | 2nd transfer section | There is a positive contact between the application terminals of the 2nd transfer and the connection terminals (T2, E) and ground terminal of the high voltage unit. | NO | Clean or correct the terminal. |
| 7 | Fusing unit | There is dirty or foreign matter on paper path of fusing unit. | YES | Clean. (Disassembling the fusing unit is prohibited.) |
| 8 | Fusing unit | Scratches on belt and roller in fusing unit. | YES | Replace the fusing unit. |

| Step | Section | Check item | Result | Action |
|---|---|---|---|---|
| | | | NO | • Replace the high voltage unit.<br>• Replace the MFP board. |

### (5) Scanner troubleshooting procedure

| Step | Section | Check item | Result | Action |
|---|---|---|---|---|
| 1 | Original | Original is damaged or dirty. | YES | Change the original. |
| 2 | When original glass is being used | A fault occurs in the image read through the original glass. | YES | Go to step 6. |
| 3 | When DF-704/DF-629 is being used: 1st side | A fault occurs in the image read from the 1st side while DF is being used. | YES | Go to step 12. |
| 4 | When DF-629 is being used: 2nd side | A fault occurs in the image read from the 2nd side while DF-629 is being used. | YES | Go to step 12. |
| 5 | When DF-704 is being used: 2nd side | A fault occurs in the image read from the 2nd side while DF-704 is being used. | YES | Go to step 20. |
| Main body side_original glass | | | | |
| 6 | DF side_ Original pad | Original pad of DF is dirty. | YES | Clean. |
| 7 | Original glass | Original glass is dirty. | YES | Clean. |
| 8 | Shading sheet | Shading sheet is dirty. | YES | Clean. |
| 9 | End face of original is reproduced as a line | Select [Service Mode] -> [Machine] -> [Scan Area] -> [Scanner Image Side Edge] and make the necessary adjustment, and the image trouble is eliminated. | NO | Go to the next step. |
| 10 | Line occurring due to faulty shading | Select [Service Mode] -> [Machine] -> [Scan Area] -> [Image Position: Leading Edge] and make the necessary adjustment, and the image trouble is eliminated. | NO | Go to the next step. |
| 11 | Parts along scanning path | Mirror, lens, light guide or reflectors is dirty. | YES | Clean. |
| | | | NO | • Replace the LED exposure unit.<br>• Replace the CCD board. |
| Main body side_DF original reading section | | | | |
| 12 | Main body side_reading section | Document reading glass of main body is dirty. | YES | Clean. |
| 13 | DF side_ document reading glass cleaning brush | Document reading glass cleaning brush of DF is dirty. | YES | Clean. |
| 14 | Main body side_shading sheet | Shading sheet of main body is dirty. | YES | Clean. |
| 15 | When DF-704/DF-629 is being used: 1st side: end face of original is reproduced as a line | Select [Service Mode] -> [ADF] -> [Original Stop Position] -> [Sub Scanning Direction 1-Side] and make the necessary adjustment, and the image trouble is eliminated. | NO | Go to the next step. |
| 16 | When DF-629 is being used: 2nd side: end face of original is reproduced as a line | Select [Service Mode] -> [ADF] -> [Original Stop Position] -> [Sub Scanning Direction 2-Side] and make the necessary adjustment, and the image trouble is eliminated. | NO | Go to the next step. |
| 17 | Service Mode -> Read Pos Adj | Select [Service Mode] -> [ADF] -> [Read Pos Adj] -> [Auto Adjust] and the image trouble is eliminated. | NO | Go to the next step. |
| 18 | Line occurring due to faulty shading | Select [Service Mode] -> [Machine] -> [Scan Area] -> [Image Position: Leading Edge] and make the necessary adjustment, and the image trouble is eliminated. | NO | Go to the next step. |
| 19 | Parts along scanning path | Mirror, lens, light guide or reflectors is dirty. | YES | Clean. |
| | | | NO | • Replace the LED exposure unit.<br>• Replace the CCD board. |
| DF-704 side_original reading section | | | | |
| 20 | CIS glass cleaning | CIS glass is dirty. | YES | Clean. |
| 21 | CIS reading section | CIS reading section is dirty. | YES | Clean. |
| 22 | CIS cleaning brush | CIS cleaning brush is dirty. | YES | Clean. |
| 23 | Shading sheet | Shading sheet is dirty. | YES | Clean. |
| 24 | When DF-704 is being used: 2nd side: end face of original is reproduced as a line | Select [Service Mode] -> [ADF] -> [Original Stop Position] -> [Sub Scanning Direction 2-Side] and make the necessary adjustment, and the image trouble is eliminated. | NO | Go to the next step. |

| Step | Section | Check item | Result | Action |
|---|---|---|---|---|
| 25 | When DF-704 is being used: 2nd side: Home Read Position | Select [Service Mode] -> [ADF] -> [Home Read Position Adjust] and the image trouble is eliminated. | NO | Go to the next step. |
| 26 | Scanning section | CIS reading section is dirty. | YES | Clean. |
| | | | NO | Replace the CIS module. |

### 15.3.3 White line 2, White band 2, Color line 2, Color band 2

#### (1) Typical faulty images

The arrow in the exemplary image troubles indicates the paper feeding direction.

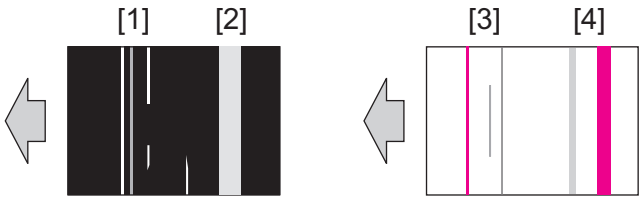


| | | | |
|---|---|---|---|
| [1] | White line | [2] | White band |
| [3] | Color line | [4] | Color band |

#### (2) Initial troubleshooting procedure

| Step | Section | Check item | Result | Action |
|---|---|---|---|---|
| 1 | Paper Setting | The paper to be used for printing does not match the paper type and size of paper setting selected on the machine. | YES | Make the paper setting again on the machine. |
| 2 | Service Mode -> Stabilizer | Select [Service Mode] -> [Imaging Process Adjustment] -> [Stabilizer] -> [Stabilization Only] and the image trouble is eliminated. | NO | Go to the next step. |
| 3 | Service Mode -> Gradation Adjust | Select [Service Mode] -> [Imaging Process Adjustment] -> [Gradation Adjust] and the image trouble is eliminated. | NO | Go to the next step. |
| 4 | Image check | • Select [Service Mode] -> [Test Mode] -> [Halftone Pattern]. Select "SINGLE", "HYPER", "Gradation", "1-Sided", "CMYK", and "Full Bleed", enter "64" for Density, and load tray 2 with A3 paper. Press the start key. This runs a print cycle for C, M, Y, and K in that order.<br>• Check the image after printing to determine which color causes the abnormal image. | 1 to 3 colors | Go to the 1-color troubleshooting procedure. |
| | | | 4 colors | Go to the 4-color troubleshooting procedure. |
| | | | Not available | Go to scanner troubleshooting procedure. |

#### (3) 1-color troubleshooting procedure

| Step | Section | Check item for the faulty color | Result | Action for the faulty color |
|---|---|---|---|---|
| 1 | Service Mode -> Table Number | Select [Service Mode] -> [State Confirmation] -> [Table Number]. The measured value is close to the standard value.<br>• Developing bias: Vdc-C, Vdc-M, Vdc-Y, Vdc-K: close to the standard value of 300 V to 400 V (100 V to 800 V)<br>• Grid voltage: Vg-c, Vg-M, Vg-Y, Vg-K: close to the standard value of 450 V to 550 V (200 V to 1000 V) | NO | • Check the high voltage unit, developing unit, and the drum unit for wiring and connection.<br>• Replace the high voltage unit. |
| 2 | Write section | Sharp white line or colored line is blurry. | YES | Clean the PH window. |
| 3 | Charging section | Foreign matter on charging roller. | YES | Lightly wipe the surface clean of foreign matter using hydro-wipe (65AA-99##).<br>Note: Do not apply a strong force to the surface of the charging roller, as doing so can damage the surface. |
| 4 | Photo conductor section | There is a positive contact between the electrostatic charger application terminals and the high voltage unit connection terminals. | NO | Clean or correct the terminal. |
| 5 | Developing section | There is a positive contact between the developing bias application terminals and the high voltage unit connection terminals (Y: B4; M: B3; C: B2; K: B1). | NO | Clean or correct the terminal. |
| 6 | Photo conductor section | Scratches on photo conductor. | YES | • Clean.<br>• Replace the drum unit. |

| Step | Section | Check item for the faulty color | Result | Action for the faulty color |
|---|---|---|---|---|
| 7 | Photo conductor section | Toner line or dirt on photo conductor. (improper cleaning) | YES | Replace the drum unit. |
| 8 | 1st transfer section | There is a positive contact between the transfer belt application terminals and the high voltage unit connection terminals (Y: T1-4; M: T1-3; C: T1-2; K: T1-1). | NO | Clean or correct the terminal. |
| 9 | 1st transfer section | Scratches or dirt on 1st transfer roller. | YES | • Clean.<br>• Replace the transfer belt unit. |
| 10 | Developing section | Toner bristles not even on the developing roller, resulting in a line or band. | YES | Replace developing unit. |
| | | | NO | Replace the PH unit. |

### (4) 4-color troubleshooting procedure

| Step | Section | Check item | Result | Action |
|---|---|---|---|---|
| 1 | Paper path | There is dirty or foreign matter on paper path. | YES | Check and clean the paper path including the duplex section. |
| 2 | Transfer belt unit | Lines that can be removed by cleaning are evident on the transfer belt. (improper cleaning) | YES | • Check and clean the cleaning blade.<br>• Replace the transfer belt unit. |
| 3 | Transfer belt unit | Dirt, scratches, or foreign matter on the transfer belt. | YES | • Clean.<br>• Replace the transfer belt unit. |
| 4 | Transfer belt unit | There is a positive contact between the transfer belt application terminals and the high voltage unit connection terminals (Y: T1-4; M: T1-3; C: T1-2; K: T1-1). | NO | Clean or correct the terminal. |
| 5 | 2nd transfer section | Dirt or foreign matter on the 2nd transfer roller. | YES | • Remove the foreign matter.<br>• Replace the transfer roller unit. |
| 6 | 2nd transfer section | There is a positive contact between the application terminals of the 2nd transfer and the connection terminals (T2, E) and ground terminal of the high voltage unit. | NO | Clean or correct the terminal. |
| 7 | Fusing unit | Dirt or foreign matter on paper path or separation claw of the fusing unit. | YES | Clean. (Disassembling the fusing unit is prohibited.) |
| 8 | Fusing unit | Scratches on belt and roller in fusing unit. | YES | Replace the fusing unit. |
| | | | NO | • Replace the high voltage unit.<br>• Replace the MFP board. |

### (5) Scanner troubleshooting procedure

| Step | Section | Check item | Result | Action |
|---|---|---|---|---|
| 1 | Original | Original is damaged or dirty. | YES | Change the original. |
| 2 | Original Type | Select [Copy setting] -> [Original Type] and change the setting, and the image trouble is eliminated. | YES | Correct the setting. |
| 3 | When original glass is being used: Service Mode -> Scan Area | Select [Service Mode] -> [Machine] -> [Scan Area] -> [Image Position: Leading Edge] and make the necessary adjustment, and the image trouble is eliminated. | NO | Go to the next step. |
| 4 | When original glass is being used | Original glass or original pad is dirty. | YES | Clean. |
| | | | NO | Replace the CCD board. |
| 5 | When DF is being used: 2nd side: End face of original is reproduced as a line | Select [Service Mode] -> [ADF] -> [Auto Stop Position Adjustment] -> [Main Scanning (Front)] and the image trouble is eliminated. | NO | Go to the next step. |
| 6 | When DF is being used: 2nd side: End face of original is reproduced as a line | Select [Service Mode] -> [ADF] -> [Auto Stop Position Adjustment] -> [Main Scanning (Back)] and the image trouble is eliminated. | NO | Go to the next step. |
| 7 | • When DF-704/DF-629 is being used: 1st side<br>• When DF-629 is being used: 2nd side | Document reading glass or document reading glass cleaning brush is dirty. | YES | Clean. |
| | | | NO | Replace the CCD board. |
| 8 | When DF-704 is being used: 2nd side | CIS glass or CIS cleaning brush is dirty. | YES | Clean. |
| | | | NO | Replace the CIS module. |

## 15.3.4 Uneven density 1

### (1) Typical faulty images

The arrow in the exemplary image troubles indicates the paper feeding direction.

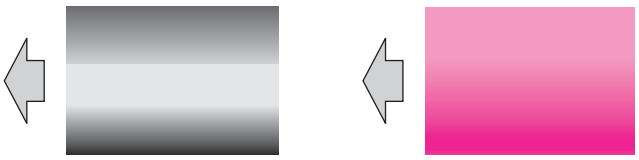

### (2) Initial troubleshooting procedure

| Step | Section | Check item | Result | Action |
|---|---|---|---|---|
| 1 | Paper Setting | The paper to be used for printing does not match the paper type and size of paper setting selected on the machine. | YES | Make the paper setting again on the machine. |
| 2 | IDC sensor | • IDC sensor is dirty.<br>• IDC sensor shutter does not operate properly. | YES | • Clean.<br>• Clean or correct the IDC sensor shutter. |
| 3 | Service Mode -> Stabilizer | Select [Service Mode] -> [Imaging Process Adjustment] -> [Stabilizer] -> [Stabilization Only] and the image trouble is eliminated. | NO | Go to the next step. |
| 4 | Service Mode -> Gradation Adjust | Select [Service Mode] -> [Imaging Process Adjustment] -> [Gradation Adjust] and the image trouble is eliminated. | NO | Go to the next step. |
| 5 | Image check | • Select [Service Mode] -> [Test Mode] -> [Halftone Pattern]. Select "SINGLE", "HYPER", "Gradation", "1-Sided", "CMYK", and "Full Bleed", enter "64" for Density, and load tray 2 with A3 paper. Press the start key. This runs a print cycle for C, M, Y, and K in that order.<br>• Check the image after printing and the abnormal image occurs only with one color. | YES | Go to the 1-color troubleshooting procedure. |
| | | | NO | Go to the 4-color troubleshooting procedure. |

### (3) 1-color troubleshooting procedure

| Step | Section | Check item for the faulty color | Result | Action for the faulty color |
|---|---|---|---|---|
| 1 | High image density original | Uneven density in sub scan direction occurs at a pitch of 40 mm to 50 mm when a multi-copy cycle is run using an original with high image density (50% or more). | YES | Feed 10 to 20 blank sheets of paper with no originals placed, as the developing unit fails to keep up with a high demand for toner. |
| 2 | Service Mode -> LD 1/2 Balance Adj. | Select [Service Mode] -> [Machine] -> [LD adjustment] -> [LD 1/2 Balance Adj.] and the image trouble is eliminated. | NO | Go to the next step. |
| 3 | Service Mode -> TCR Level Setting | Select [Service Mode] -> [Imaging Process Adjustment] - > [TCR Level Setting] and make the necessary adjustment, and the image trouble is eliminated. | NO | Go to the next step. |
| 4 | Write section | Dirt or foreign matter on the dust-proof glass of the PH. | YES | Clean the PH window. |
| 5 | Charging section | Foreign matter on charging roller. | YES | Lightly wipe the surface clean of foreign matter using hydro-wipe (65AA-99##).<br>Note: Do not apply a strong force to the surface of the charging roller, as doing so can damage the surface. |
| 6 | Photo conductor section | Dirt, scratches, or foreign matter on the photo conductor. | YES | • Clean.<br>• Replace the drum unit. |
| 7 | 1st transfer section | Dirt, scratches, or foreign matter on the 1st transfer roller. | YES | • Clean.<br>• Replace the transfer belt unit. |
| 8 | 1st transfer section | Faulty pressure/retraction operation of the 1st transfer roller. | YES | • Correct or replace the drive system.<br>• Replace the transfer belt unit. |
| 9 | Developing section | Toper hopper operates improperly or contains foreign matter. | YES | • Correct or remove.<br>• Replace the hopper drive unit. |
| 10 | Developing section | Toner bristles not even on the developing roller, resulting in a line or band. | YES | Replace developing unit. |
| | | | NO | • Replace the PH unit.<br>• Replace the high voltage unit. |

### (4) 4-color troubleshooting procedure

| Step | Section | Check item | Result | Action |
|---|---|---|---|---|
| 1 | Paper path | There is dirty or foreign matter on paper path. | YES | Check and clean the paper path including the duplex section. |
| 2 | Image Transfer Belt Unit | Lines that can be removed by cleaning are evident on the transfer belt. (improper cleaning) | YES | • Check and clean the cleaning blade.<br>• Replace the transfer belt unit. |
| 3 | Image Transfer Belt Unit | Dirt, scratches, or foreign matter on the transfer belt. | YES | • Clean.<br>• Replace the transfer belt unit. |
| 4 | Image Transfer Belt Unit | There is a positive contact between the transfer belt application terminals and the high voltage unit connection terminals (Y: T1-4; M: T1-3; C: T1-2; K: T1-1). | NO | Clean or correct the terminal. |
| 5 | Image Transfer Belt Unit | Transfer belt rotates faultily. | YES | Replace the transfer belt unit. |
| 6 | 2nd transfer section | Dirt or foreign matter on the 2nd transfer roller. | YES | • Remove the foreign matter.<br>• Replace the transfer roller unit. |
| 7 | 2nd transfer section | Faulty pressure/retraction operation of the 2nd transfer roller. | YES | • Correct.<br>• Replace the transfer roller unit. |
| 8 | 2nd transfer section | There is a positive contact between the application terminals of the 2nd transfer and the connection terminals (T2, E) and ground terminal of the high voltage unit. | NO | Clean or correct the terminal. |
| 9 | Fusing unit | There is dirty or foreign matter on paper path of fusing unit. | YES | Clean. (Disassembling the fusing unit is prohibited.) |
| 10 | Service Mode -> Initialize + Image Stabilization | Select [Service Mode] -> [Imaging Process Adjustment] -> [Stabilizer] -> [Initialize + Image Stabilization] and [Gradation Adjust], and the image trouble is eliminated. | YES | Readjust. |
| | | | NO | • Replace the fusing unit.<br>• Replace the high voltage unit.<br>• Replace the MFP board. |

## 15.3.5 Uneven density 2

### (1) Typical faulty images

The arrow in the exemplary image troubles indicates the paper feeding direction.

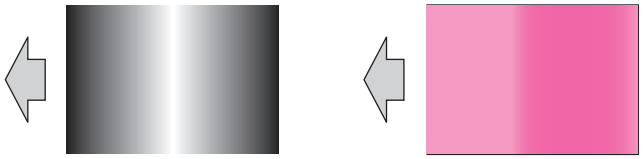

### (2) Initial troubleshooting procedure

| Step | Section | Check item | Result | Action |
|---|---|---|---|---|
| 1 | Paper Setting | The paper to be used for printing does not match the paper type and size of paper setting selected on the machine. | YES | Make the paper setting again on the machine. |
| 2 | IDC sensor | • IDC sensor is dirty.<br>• IDC sensor shutter does not operate properly. | YES | • Clean.<br>• Clean or correct the IDC sensor shutter. |
| 3 | Service Mode -> Stabilizer | Select [Service Mode] -> [Imaging Process Adjustment] -> [Stabilizer] -> [Stabilization Only] and the image trouble is eliminated. | NO | Go to the next step. |
| 4 | Service Mode -> Gradation Adjust | Select [Service Mode] -> [Imaging Process Adjustment] -> [Gradation Adjust] and the image trouble is eliminated. | NO | Go to the next step. |
| 5 | Image check | • Select [Service Mode] -> [Test Mode] -> [Halftone Pattern]. Select "SINGLE", "HYPER", "Gradation", "1-Sided", "CMYK", and "Full Bleed", enter "64" for Density, and load tray 2 with A3 paper. Press the start key. This runs a print cycle for C, M, Y, and K in that order.<br>• Check the image after printing and the abnormal image occurs only with one color. | YES | Go to the 1-color troubleshooting procedure. |
| | | | NO | Go to the 4-color troubleshooting procedure. |

### (3) 1-color troubleshooting procedure

| Step | Section | Check item for the faulty color | Result | Action for the faulty color |
|---|---|---|---|---|
| 1 | Service Mode -> LD 1/2 Balance Adj. | Select [Service Mode] -> [Machine] -> [LD adjustment] -> [LD 1/2 Balance Adj.] and the image trouble is eliminated. | YES | Readjust. |
| 2 | Write section | Dirt or foreign matter on the dust-proof glass of the PH. | YES | Clean the PH window. |
| 3 | Charging section | Foreign matter on charging roller. | YES | Lightly wipe the surface clean of foreign matter using hydro-wipe (65AA-99##).<br>Note: Do not apply a strong force to the surface of the charging roller, as doing so can damage the surface. |
| 4 | Photo conductor section | Dirt, scratches, or foreign matter on the photo conductor. | YES | • Clean.<br>• Replace the drum unit. |
| 5 | Photo conductor section | Photo conductor drives faultily. | YES | • Correct.<br>• Replace the drum unit. |
| 6 | 1st transfer section | Scratches or dirt on 1st transfer roller. | YES | • Clean.<br>• Replace the transfer belt unit. |
| 7 | Developing section | Toner bristles not even on the developing roller, resulting in a line or band. | YES | Replace developing unit. |
| | | | NO | • Replace the PH unit.<br>• Replace the high voltage unit. |

### (4) 4-color troubleshooting procedure

| Step | Section | Check item | Result | Action |
|---|---|---|---|---|
| 1 | Paper path | There is dirty or foreign matter on paper path. | YES | Check and clean the paper path including the duplex section. |
| 2 | Transfer belt unit | Dirt, scratches, or foreign matter on the transfer belt. | YES | • Clean.<br>• Replace the transfer belt unit. |
| 3 | Transfer belt unit | There is a positive contact between the transfer belt application terminals and the high voltage unit connection terminals (Y: T1-4; M: T1-3; C: T1-2; K: T1-1). | NO | Clean or correct the terminal. |
| 4 | Transfer belt unit | Transfer belt rotates faultily. | YES | • Correct.<br>• Replace the transfer belt unit. |
| 5 | 2nd transfer section | Dirt or foreign matter on the 2nd transfer roller. | YES | • Remove the foreign matter.<br>• Replace the transfer roller unit. |
| 6 | 2nd transfer section | Faulty pressure/retraction operation of the 2nd transfer roller. | YES | • Correct.<br>• Replace the transfer roller unit. |
| 7 | 2nd transfer section | There is a positive contact between the application terminals of the 2nd transfer and the connection terminals (T2, E) and ground terminal of the high voltage unit. | NO | Clean or correct the terminal. |
| 8 | Fusing unit | There is dirty or foreign matter on paper path of fusing unit. | YES | Clean. (Disassembling the fusing unit is prohibited.) |
| 9 | Service Mode -> Initialize + Image Stabilization | Select [Service Mode] -> [Imaging Process Adjustment] -> [Stabilizer] -> [Initialize + Image Stabilization] and [Gradation Adjust], and the image trouble is eliminated. | YES | Readjust. |
| | | | NO | • Replace the fusing unit.<br>• Replace the high voltage unit.<br>• Replace the MFP board. |

## 15.3.6 Faint image, low image density (ID lowering)

### (1) Typical faulty images

The arrow in the exemplary image troubles indicates the paper feeding direction.

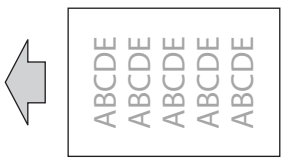


### (2) Initial troubleshooting procedure

| Step | Section | Check item | Result | Action |
|---|---|---|---|---|
| 1 | Malfunction code | The maintenance call mark is displayed on the panel. | YES | Perform the relevant troubleshooting procedure |

| Step | Section | Check item | Result | Action |
|---|---|---|---|---|
| | | | | corresponding to the malfunction code. |
| 2 | Paper Setting | The paper to be used for printing does not match the paper type and size of paper setting selected on the machine. | YES | Make the paper setting again on the machine. |
| 3 | Damp paper | Paper is damp. | YES | Change paper to one just unwrapped from its package. |
| 4 | IDC sensor | • IDC sensor is dirty.<br>• IDC sensor shutter does not operate properly. | YES | • Clean.<br>• Clean or correct the IDC sensor shutter. |
| 5 | Service Mode -> Stabilizer | Select [Service Mode] -> [Imaging Process Adjustment] -> [Stabilizer] -> [Stabilization Only] and the image trouble is eliminated. | NO | Go to the next step. |
| 6 | Service Mode -> Gradation Adjust | Select [Service Mode] -> [Imaging Process Adjustment] -> [Gradation Adjust] and the image trouble is eliminated. | NO | Go to the next step. |
| 7 | Image check | • Select [Service Mode] -> [Test Mode] -> [Gradation Pattern]. Select "SINGLE", "HYPER", "Gradation", "1-Sided", "4 Color", "Full Bleed", and "12 gradations", and load tray 2 with A3 paper. Press the start key. This runs a print cycle for C, M, Y, and K in that order.<br>• Check the image after printing to determine which color causes the abnormal image. | 1 to 3 colors | Go to the 1-color troubleshooting procedure. |
| | | | 4 colors | Go to the 4-color troubleshooting procedure. |
| | | | Not available | Go to scanner troubleshooting procedure. |

### (3) 1-color troubleshooting procedure

| Step | Section | Check item for the faulty color | Result | Action for the faulty color |
|---|---|---|---|---|
| 1 | Write section | Dirt or foreign matter on the dust-proof glass of the PH. | YES | Clean the PH window. |
| 2 | Charging section | Foreign matter on charging roller | YES | Lightly wipe the surface clean of foreign matter using hydro-wipe (65AA-99##).<br>Note: Do not apply a strong force to the surface of the charging roller, as doing so can damage the surface. |
| 3 | Service Mode -> Table Number | Select [Service Mode] -> [State Confirmation] -> [Table Number]. The measured value is close to the standard value.<br>• Developing bias: Vdc-C, Vdc-M, Vdc-Y, Vdc-K: close to the standard value of 300 V to 400 V (100 V to 800 V)<br>• Grid voltage: Vg-c, Vg-M, Vg-Y, Vg-K: close to the standard value of 450 V to 550 V (200 V to 1000 V) | NO | • Check the high voltage unit, developing unit, and the drum unit for wiring and connection.<br>• Replace the high voltage unit. |
| 4 | Photo conductor section | There is a positive contact between the electrostatic charger application terminals and the high voltage unit connection terminals. | NO | Clean or correct the terminal. |
| 5 | Developing section | There is a positive contact between the developing bias application terminals and the high voltage unit connection terminals (Y: B4; M: B3; C: B2; K: B1). | NO | Clean or correct the terminal. |
| 6 | Hopper drive unit section | Faulty connector connection between the toner supply motor (M6 to M9) and MFP board (CN16E, CN30E). | YES | Reconnect the connector. |
| 7 | Hopper drive unit section | Faulty in the drive of sub hopper. | YES | • Correct.<br>• Replace the hopper drive unit. |
| 8 | Service Mode -> TCR data | Select [Service Mode] -> [State Confirmation] -> [Level History 1] and the measured value is correct.<br>TCR-C, TCR-M, TCR-Y, TCR-K: normal value 5 to 8 % | NO | Select [Service Mode] -> [Imaging Process Adjustment] -> [Manual Toner Add] and perform the function. |
| 9 | Service Mode -> Max Image Density Adj | Select [Service Mode] -> [Imaging Process Adjustment] - > [Max Image Density Adj] and make the necessary adjustment, and the image trouble is eliminated. | NO | Go to the next step. |
| 10 | Service Mode -> Initialize + Image Stabilization | Select [Service Mode] -> [Imaging Process Adjustment] -> [Stabilizer] -> [Initialize + Image Stabilization] and [Gradation Adjust], and the image trouble is eliminated. | YES | Readjust. |
| | | | NO | • Replace the drum unit.<br>• Replace the developing unit.<br>• Replace the PH unit.<br>• Replace the high voltage unit.<br>• Replace the MFP board. |

### (4) 4-color troubleshooting procedure

| Step | Section | Check item | Result | Action |
|---|---|---|---|---|
| 1 | Image Transfer Belt Unit | There is a positive contact between the transfer belt application terminals and the high voltage unit connection terminals (Y: T1-4; M: T1-3; C: T1-2; K: T1-1). | NO | Clean or correct the terminal. |
| 2 | 2nd transfer section | There is a positive contact between the application terminals of the 2nd transfer and the connection terminals (T2, E) and ground terminal of the high voltage unit. | NO | Clean or correct the terminal. |
| 3 | Service Mode -> Max Image Density Adj | Select [Service Mode] -> [Imaging Process Adjustment] - > [Max Image Density Adj] and make the necessary adjustment, and the image trouble is eliminated. | NO | Go to the next step. |
| 4 | Service Mode -> Initialize + Image Stabilization | Select [Service Mode] -> [Imaging Process Adjustment] -> [Stabilizer] -> [Initialize + Image Stabilization] and [Gradation Adjust], and the image trouble is eliminated. | YES | Readjust. |
| | | | NO | • Replace the transfer belt unit.<br>• Replace the high voltage unit.<br>• Replace the MFP board. |

### (5) Scanner troubleshooting procedure

| Step | Section | Check item | Result | Action |
|---|---|---|---|---|
| 1 | Original Type | Select [Copy setting] -> [Original Type] and change the setting, and the image trouble is eliminated. | YES | Correct the setting. |
| 2 | When original glass is being used | Original glass or original pad is dirty. | YES | Clean. |
| 3 | Parts along scanning path | Mirror, lens, light guide or reflectors is dirty. | YES | Clean. |
| 4 | Main body side_shading sheet | Shading sheet of main body is dirty. | YES | Clean. |
| | | | NO | • Replace the LED exposure unit.<br>• Replace the CCD board. |
| 5 | • When DF-704/DF-629 is being used: 1st side<br>• When DF-629 is being used: 2nd side | Document reading glass or document reading glass cleaning brush is dirty. | YES | Clean. |
| | | | NO | • Replace the LED exposure unit.<br>• Replace the CCD board. |
| 6 | When DF-704 is being used: 2nd side | • Shading correction surface of DF-704 is dirty.<br>• CIS glass or CIS cleaning brush is dirty. | YES | Clean. |
| | | | NO | Replace the CIS module. |

## 15.3.7 Gradation reproduction failure

### (1) Typical faulty images

The arrow in the exemplary image troubles indicates the paper feeding direction.

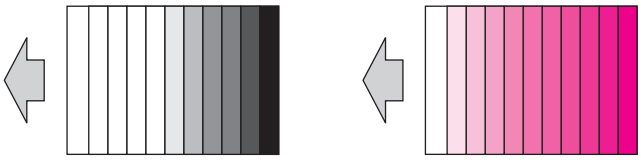

### (2) Troubleshooting procedure

| Step | Section | Check item | Result | Action |
|---|---|---|---|---|
| 1 | Malfunction code | The maintenance call mark is displayed on the panel. | YES | Perform the relevant troubleshooting procedure corresponding to the malfunction code. |
| 2 | Paper Setting | The paper to be used for printing does not match the paper type and size of paper setting selected on the machine. | YES | Make the paper setting again on the machine. |
| 3 | Image check | • Select [Service Mode] -> [Test Mode] -> [Gradation Pattern]. Select "SINGLE", "HYPER", "Gradation", "1-Sided", "CMYK", "Full Bleed", and "12 gradations", and load tray 2 with A3 paper. Press the start key. This runs a print cycle for C, M, Y, and K in that order.<br>• Check the image after printing to determine which color causes the abnormal image. | - | Go to the next step. |

| Step | Section | Check item | Result | Action |
|---|---|---|---|---|
| 4 | Write section | Dirt or foreign matter on the dust-proof glass of the PH of the color which is responsible for the abnormal image. | YES | Clean the PH window. |
| 5 | Charging section | Foreign matter on charging roller of the color which is responsible for the abnormal image. | YES | Lightly wipe the surface clean of foreign matter using hydro-wipe (65AA-99##).<br>Note: Do not apply a strong force to the surface of the charging roller, as doing so can damage the surface. |
| 6 | IDC sensor | • IDC sensor is dirty.<br>• IDC sensor shutter does not operate properly. | YES | • Clean.<br>• Clean or correct the IDC sensor shutter. |
| 7 | Service Mode -> Stabilizer | Select [Service Mode] -> [Imaging Process Adjustment] -> [Stabilizer] -> [Stabilization Only] and the image trouble is eliminated. | NO | Go to the next step. |
| 8 | Service Mode -> Gradation Adjust | Select [Service Mode] -> [Imaging Process Adjustment] -> [Gradation Adjust] and the image trouble is eliminated. | NO | Go to the next step. |
| 9 | Service Mode -> Max Image Density Adj | Select [Service Mode] -> [Imaging Process Adjustment] - > [Max Image Density Adj] and make the necessary adjustment, and the image trouble is eliminated. | NO | Go to the next step. |
| 10 | Service Mode -> Initialize + Image Stabilization | Select [Service Mode] -> [Imaging Process Adjustment] -> [Stabilizer] -> [Initialize + Image Stabilization] and [Gradation Adjust], and the image trouble is eliminated. | YES | Readjust. |
| | | | NO | • Replace the drum unit that is responsible for the abnormal image.<br>• Replace the developing unit that is responsible for the abnormal image.<br>• Replace the PH unit.<br>• Replace the high voltage unit.<br>• Replace the MFP board. |

### 15.3.8 Color reproducibility error

#### (1) Typical faulty images

The arrow in the exemplary image troubles indicates the paper feeding direction.

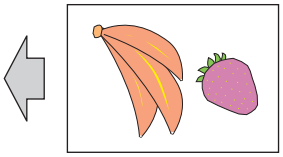

#### (2) Troubleshooting procedure

| Step | Section | Check item | Result | Action |
|---|---|---|---|---|
| 1 | Damp paper | Paper is damp. | YES | Change paper to one just unwrapped from its package. |
| 2 | Paper Setting | The paper to be used for printing does not match the paper type and size of paper setting selected on the machine. | YES | Make the paper setting again on the machine. |
| 3 | Administrator Settings -> PS Designer Settings | Select [Utility] -> [Administrator Settings] -> [System Settings] -> [Expert Adjustment] -> [PS Designer Settings] and change the setting, and the image trouble is eliminated. | NO | Go to the next step. |
| 4 | Image check | • Select [Service Mode] -> [Test Mode] -> [8 Color Solid Pattern]. Select "SINGLE", "HYPER", "Gradation", and "1-Sided", enter "64" for Density, and load tray 2 with A3 paper. Press the start key. This runs a print cycle of 8 colors on one sheet of paper.<br>• Check the image after printing and the abnormal image is evident. | YES | Go to the next step. |
| 5 | Write section | Dirt or foreign matter on the dust-proof glass of the PH. | YES | Clean the PH window. |
| 6 | Charging section | Foreign matter on charging roller | YES | Lightly wipe the surface clean of foreign matter using hydro-wipe (65AA-99##). |

| Step | Section | Check item | Result | Action |
|---|---|---|---|---|
| | | | | Note: Do not apply a strong force to the surface of the charging roller, as doing so can damage the surface. |
| 7 | Image Transfer Belt Unit | There is a positive contact between the transfer belt application terminals and the high voltage unit connection terminals (Y: T1-4; M: T1-3; C: T1-2; K: T1-1). | NO | Clean or correct the terminal. |
| 8 | 2nd transfer section | There is a positive contact between the application terminals of the 2nd transfer and the connection terminals (T2, E) and ground terminal of the high voltage unit. | NO | Clean or correct the terminal. |
| 9 | IDC sensor | • IDC sensor is dirty.<br>• IDC sensor shutter does not operate properly. | YES | • Clean.<br>• Clean or correct the IDC sensor shutter. |
| 10 | Service Mode -> Stabilizer | Select [Service Mode] -> [Imaging Process Adjustment] -> [Stabilizer] -> [Stabilization Only] and the image trouble is eliminated. | NO | Go to the next step. |
| 11 | Service Mode -> Gradation Adjust | Select [Service Mode] -> [Imaging Process Adjustment] -> [Gradation Adjust] and the image trouble is eliminated. | NO | Go to the next step. |
| 12 | Service Mode -> Max Image Density Adj | Select [Service Mode] -> [Imaging Process Adjustment] - > [Max Image Density Adj] and make the necessary adjustment, and the image trouble is eliminated. | NO | Go to the next step. |
| 13 | Connector connection | Faulty connector connection the high voltage unit (CN1, CN2) and MFP board (CN22E, CN36E). | YES | Reconnect the connector. |
| 14 | Service Mode -> Initialize + Image Stabilization | Select [Service Mode] -> [Imaging Process Adjustment] -> [Stabilizer] -> [Initialize + Image Stabilization] and [Gradation Adjust], and the image trouble is eliminated. | YES | Readjust. |
| | | | NO | • Replace the transfer belt unit.<br>• Replace the high voltage unit.<br>• Replace the MFP board. |

### 15.3.9 Incorrect color image registration

#### (1) Typical faulty images

The arrow in the exemplary image troubles indicates the paper feeding direction.

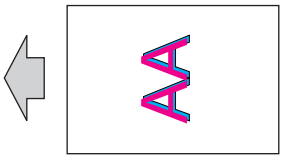

#### (2) Initial troubleshooting procedure

| Step | Section | Check item | Result | Action |
|---|---|---|---|---|
| 1 | Malfunction code | The maintenance call mark is displayed on the panel. | YES | Perform the relevant troubleshooting procedure corresponding to the malfunction code. |
| 2 | Paper Setting | The paper to be used for printing does not match the paper type and size of paper setting selected on the machine. | YES | Make the paper setting again on the machine. |
| 3 | Service Mode -> Stabilizer | Select [Service Mode] -> [Imaging Process Adjustment] -> [Stabilizer] -> [Stabilization Only] and the image trouble is eliminated. | NO | Go to the next step. |
| 4 | Service Mode -> Gradation Adjust | Select [Service Mode] -> [Imaging Process Adjustment] -> [Gradation Adjust] and the image trouble is eliminated. | NO | Go to the next step. |
| 5 | Image check | • Select [Service Mode] -> [Test Mode] -> [8 Color Solid Pattern]. Select "SINGLE", "HYPER", "Gradation", and "1-Sided", enter "64" for Density, and load tray 2 with A3 paper. Press the start key. This runs a print cycle of 8 colors on one sheet of paper.<br>• Check the image after printing and the abnormal image is evident. | YES | Go to engine troubleshooting procedure. |
| | | | NO | Go to scanner troubleshooting procedure. |

### (3) Engine troubleshooting procedure

| Step | Section | Check item | Result | Action |
|---|---|---|---|---|
| 1 | Incorrect color registration evident at the trailing edge of the printed image | Select [Service Mode] -> [Machine] -> [Trail Edge Color Alignment Adj] and the image trouble is eliminated. | NO | Go to the next step. |
| 2 | Connector connection | Faulty connector connection the MFP board (CN18) and PH relay board (CN1, CN2). | YES | Reconnect the connector. |
| 3 | Service Mode -> Color Registration Adjustment | Select [Service Mode] -> [Machine] -> [Color Registration Adjustment] and the image trouble is eliminated. | NO | Go to the next step. |
| 4 | Service Mode -> Print Head Skew Reset | Select [Service Mode] -> [Machine] -> [Print Hear Skew Adj.] -> [Print Head Skew Reset] and the image trouble is eliminated. | NO | Go to the next step. |
| 5 | Service Mode -> Initialize + Image Stabilization | Select [Service Mode] -> [Imaging Process Adjustment] -> [Stabilizer] -> [Initialize + Image Stabilization] and [Gradation Adjust], and the image trouble is eliminated. | YES | Readjust. |
| | | | NO | • Replace the PH unit.<br>• Replace the MFP board. |

### (4) Scanner troubleshooting procedure

| Step | Section | Check item | Result | Action |
|---|---|---|---|---|
| 1 | Original | Original contains incorrect color registration. | YES | Change the original. |
| 2 | Original Type | Select [Copy setting] -> [Original Type] and change the setting, and the image trouble is eliminated. | NO | Go to the next step. |
| 3 | When DF is being used | DF does not lie flat. | YES | • Adjust the DF height. (DF-704/DF-629)<br>• Replace DF if it is deformed or hinges are broken. |
| 4 | Scanner rails | Foreign matter on scanner rails. | YES | Clean and apply lubricant. * |
| 5 | When original glass is being used | Scanner moves smoothly. | YES | Replace the CCD board. |
| | | | NO | • Adjust the scanner motor drive belt.<br>• Replace the scanner motor.<br>• Replace the scanner drive board. |
| 6 | When DF is being used: Registration Loop Adj. | Select [Service Mode] -> [ADF] -> [Registration Loop Adj.] and make the necessary adjustment, and the image trouble is eliminated. | YES | Readjust. |
| | | | NO | Replace the CCD board. |
| 7 | When DF is being used: Paper path | There is dirty on paper path or roller of DF. | YES | Clean. |
| | | | NO | Replace the CIS module. (DF-704) |

*: Apply FLOIL No. 947P or Launa 40 oil to the scanner rails. FLOIL is a product manufactured by KANTO KASEI LTD. (http://www.kanto-kasei.co.jp/).

## 15.3.10 Foggy background

### (1) Typical faulty images

The arrow in the exemplary image troubles indicates the paper feeding direction.

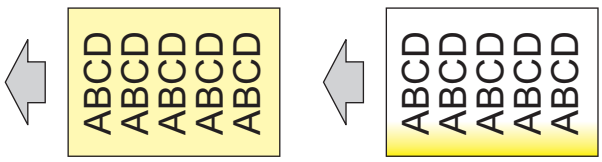


### (2) Initial troubleshooting procedure

| Step | Section | Check item | Result | Action |
|---|---|---|---|---|
| 1 | Malfunction code | The maintenance call mark is displayed on the panel. | YES | Perform the relevant troubleshooting procedure corresponding to the malfunction code. |
| 2 | Paper Setting | The paper to be used for printing does not match the paper type and size of paper setting selected on the machine. | YES | Make the paper setting again on the machine. |
| 3 | Damp paper | Paper is damp. | YES | Change paper to one just unwrapped from its package. |

| Step | Section | Check item | Result | Action |
|---|---|---|---|---|
| 4 | IDC sensor | • IDC sensor is dirty.<br>• IDC sensor shutter does not operate properly. | YES | • Clean.<br>• Clean or correct the IDC sensor shutter. |
| 5 | Service Mode -> Stabilizer | Select [Service Mode] -> [Imaging Process Adjustment] -> [Stabilizer] -> [Stabilization Only] and the image trouble is eliminated. | NO | Go to the next step. |
| 6 | Service Mode -> Gradation Adjust | Select [Service Mode] -> [Imaging Process Adjustment] -> [Gradation Adjust] and the image trouble is eliminated. | NO | Go to the next step. |
| 7 | Service Mode -> Charge AC Output fine adjustment | Fog occurs unevenly on the left-hand side with respect to the paper feeding direction. Or fog occurs in part of the paper.<br>The fog is reduced when [Service Mode] -> [Imaging Process Adjustment] -> [Charge AC Output fine adjustment] are selected and the setting value is increased. | NO | Return the setting value to the original one and go to the next step. |
| 8 | Service Mode -> Image Background Adj | Select [Service Mode] -> [Imaging Process Adjustment] -> [Image Background Adj] and [Stabilizer] and the image trouble is eliminated. | NO | Set the fog margin value back to the original one and go to the next step. |
| 9 | Image check | • Select [Service Mode] -> [Test Mode] -> [Lattice Pattern]. Select "SINGLE", "HYPER", "Gradation", "1-Sided", "CMYK", "600dpi", and "Normal", enter "20" for CD width, "20" for FD width, and "64" for Density, and load tray 2 with A3 paper. Press the start key. This runs a print cycle for C, M, Y, and K in that order.<br>• Check the image after printing to determine which color causes the abnormal image. | 1 to 3 colors | Go to the 1-color troubleshooting procedure. |
| | | | 4 colors | Go to the 4-color troubleshooting procedure. |
| | | | Not available | Go to scanner troubleshooting procedure. |

### (3) 1-color troubleshooting procedure

| Step | Section | Check item for the faulty color | Result | Action for the faulty color |
|---|---|---|---|---|
| 1 | Write section | Dirt or foreign matter on the dust-proof glass of the PH. | YES | Clean the PH window. |
| 2 | Charging section | Foreign matter on charging roller | YES | Lightly wipe the surface clean of foreign matter using hydro-wipe (65AA-99##).<br>Note: Do not apply a strong force to the surface of the charging roller, as doing so can damage the surface. |
| 3 | Photo conductor section | There is a positive contact between the electrostatic charger application terminals and the high voltage unit connection terminals. | NO | Clean or correct the terminal. |
| 4 | Developing section | There is a positive contact between the developing bias application terminals and the high voltage unit connection terminals (Y: B4; M: B3; C: B2; K: B1). | NO | Clean or correct the terminal. |
| 5 | Service Mode -> TCR data | Select [Service Mode] -> [State Confirmation] -> [Level History 1] and the measured value is correct.<br>TCR-C, TCR-M, TCR-Y, TCR-K: normal value 5 to 8 % | NO | Select [Service Mode] -> [Imaging Process Adjustment] -> [Manual Toner Add] and perform the function. |
| 6 | Service Mode -> Max Image Density Adj | Select [Service Mode] -> [Imaging Process Adjustment] - > [Max Image Density Adj] and make the necessary adjustment, and the image trouble is eliminated. | NO | Go to the next step. |
| 7 | Connector connection | Faulty connector connection the high voltage unit (CN1, CN2), MFP board (CN18, CN22E, CN36E) and PH relay board (CN1, CN2). | YES | Reconnect the connector. |
| 8 | Service Mode -> Initialize + Image Stabilization | Select [Service Mode] -> [Imaging Process Adjustment] -> [Stabilizer] -> [Initialize + Image Stabilization] and [Gradation Adjust], and the image trouble is eliminated. | YES | Readjust. |
| | | | NO | • Replace the drum unit.<br>• Replace the PH unit.<br>• Replace the high voltage unit. |

### (4) 4-color troubleshooting procedure

| Step | Section | Check item | Result | Action |
|---|---|---|---|---|
| 1 | Image Transfer Belt Unit | There is a positive contact between the transfer belt application terminals and the high voltage unit connection terminals (Y: T1-4; M: T1-3; C: T1-2; K: T1-1). | NO | Clean or correct the terminal. |
| 2 | 2nd transfer section | There is a positive contact between the application terminals of the 2nd transfer and the connection | NO | Clean or correct the terminal. |

| Step | Section | Check item | Result | Action |
|---|---|---|---|---|
| | | terminals (T2, E) and ground terminal of the high voltage unit. | | |
| 3 | Service Mode -> Max Image Density Adj | Select [Service Mode] -> [Imaging Process Adjustment] - > [Max Image Density Adj] and make the necessary adjustment, and the image trouble is eliminated. | NO | Go to the next step. |
| 4 | Service Mode -> Initialize + Image Stabilization | Select [Service Mode] -> [Imaging Process Adjustment] -> [Stabilizer] -> [Initialize + Image Stabilization] and [Gradation Adjust], and the image trouble is eliminated. | YES | Readjust. |
| | | | NO | • Replace the transfer belt unit.<br>• Replace the high voltage unit.<br>• Replace the MFP board. |

### (5) Scanner troubleshooting procedure

| Step | Section | Check item | Result | Action |
|---|---|---|---|---|
| 1 | Original | Original is damaged or dirty. | YES | Change the original. |
| 2 | Original Type | Select [Copy setting] -> [Original Type] and change the setting, and the image trouble is eliminated. | NO | Go to the next step. |
| 3 | Basic -> Density | Change the density setting, and the image trouble is eliminated. | NO | Go to the next step. |
| 4 | When DF is being used | DF does not lie flat. | YES | • Adjust the DF height. (DF-704/DF-629)<br>• Replace DF if it is deformed or hinges are broken. |
| 5 | When original glass is being used | Original glass or original pad is dirty. | YES | Clean. |
| 6 | Parts along scanning path | Mirror, lens, light guide or reflectors is dirty. | YES | Clean. |
| 7 | Main body side_shading sheet | Shading sheet of main body is dirty. | YES | Clean. |
| 8 | • When DF-704/DF-629 is being used: 1st side<br>• When DF-629 is being used: 2nd side | Document reading glass or document reading glass cleaning brush is dirty. | YES | Clean. |
| | | | NO | • Replace the LED exposure unit.<br>• Replace the CCD board. |
| 9 | When DF-704 is being used: 2nd side | • Shading correction surface of DF-704 is dirty.<br>• CIS glass or CIS cleaning brush is dirty. | YES | Clean. |
| | | | NO | Replace the CIS module. |

## 15.3.11 Void areas, White spots

### (1) Typical faulty images

The arrow in the exemplary image troubles indicates the paper feeding direction.

[1] [2]

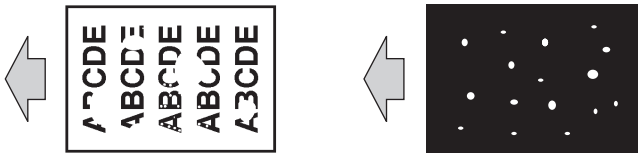

| [1] | Void areas | [2] | White spots |
|---|---|---|---|

### (2) Initial troubleshooting procedure

| Step | Section | Check item | Result | Action |
|---|---|---|---|---|
| 1 | Paper Setting | The paper to be used for printing does not match the paper type and size of paper setting selected on the machine. | YES | Make the paper setting again on the machine. |
| 2 | Use in areas with low atmospheric pressure | Select [Service Mode] -> [Imaging Process Adjustment] -> [Grad/Dev AC Bias V Selection] and change the setting to [ON]. This eliminates the trouble. | NO | Change the setting to [OFF] and go to the next step. |
| 3 | IDC sensor | • IDC sensor is dirty.<br>• IDC sensor shutter does not operate properly. | YES | • Clean.<br>• Clean or correct the IDC sensor shutter. |
| 4 | Service Mode -> Stabilizer | Select [Service Mode] -> [Imaging Process Adjustment] -> [Stabilizer] -> [Stabilization Only] and the image trouble is eliminated. | NO | Go to the next step. |
| 5 | Service Mode -> Gradation Adjust | Select [Service Mode] -> [Imaging Process Adjustment] -> [Gradation Adjust] and the image trouble is eliminated. | NO | Go to the next step. |

| Step | Section | Check item | Result | Action |
|---|---|---|---|---|
| 6 | Service Mode -> Charge AC Output fine adjustment | The white spots is eliminated when [Service Mode] -> [Imaging Process Adjustment] -> [Charge AC Output fine adjustment] are selected and the setting value is increased. | NO | Return the setting value to the original one and go to the next step. |
| 7 | Service Mode -> Primary transfer adj. | Select [Service Mode] -> [Imaging Process Adjustment] -> [Transfer Voltage Fine Adj] -> [Primary transfer adj.] and the image trouble is eliminated.<br>* Decrease the setting value for white dots. | NO | Return the setting value to the original one and go to the next step. |
| 8 | Service Mode -> 2nd transfer adj. | Select [Service Mode] -> [Imaging Process Adjustment] -> [Transfer Voltage Fine Adj] -> [2nd Transfer Adj.] and the image trouble is eliminated.<br>* Increase or decrease the setting value to find a specific value at which the trouble is eliminated. | NO | Return the setting value to the original one and go to the next step. |
| 9 | Enhanced Security -> Engine FW Dip SW | Select [Service Mode] -> [Enhanced Security] -> [Engine FW Dip SW] -> [No. 8], set OFF, perform [2nd Transfer Adj.] again, and the image trouble is eliminated.<br>* Increase or decrease the setting value to find a specific value at which the trouble is eliminated. | NO | Return the setting value to the original one and go to the next step. |
| 10 | Service Mode -> TCR Level | Select [Service Mode] -> [Imaging Process Adjustment] -> [TCR level] and set the adjustment value of all colors to "+3".<br>Next, select [Service Mode] -> [Imaging Process Adjustment] -> [Manual Toner Add], select all colors, and press the start key. (This starts a toner replenishing sequence.)<br>Then, select [Service Mode] -> [Imaging Process Adjustment] -> [Stabilizer] -> [Initialize + Image Stabilization] and perform the function.<br>Then, select [Service Mode] -> [Imaging Process Adjustment] -> [Transfer Voltage Fine Adj.] -> [2nd Transfer Adj.], perform the function, and the image trouble is eliminated.<br>* Increase or decrease the setting value to find a specific value at which the trouble is eliminated. | NO | Return the setting value to the original one and go to the next step. |
| 11 | Image check | • Select [Service Mode] -> [Test Mode] -> [Halftone Pattern]. Select "SINGLE", "HYPER", "Gradation", "1-Sided", "CMYK", and "Full Bleed", enter "64" for Density, and load tray 2 with A3 paper. Press the start key. This runs a print cycle for C, M, Y, and K in that order.<br>• If the abnormal image does not recur, change Density to "255" and make a print check.<br>• Check the image after printing and the abnormal image occurs only with one color. | YES | Go to the 1-color troubleshooting procedure. |
| | | | NO | Go to the 4-color troubleshooting procedure. |

### (3) 1-color troubleshooting procedure

| Step | Section | Check item for the faulty color | Result | Action for the faulty color |
|---|---|---|---|---|
| 1 | Write section | Dirt or foreign matter on the dust-proof glass of the PH. | YES | Clean the PH window. |
| 2 | Charging section | Foreign matter on charging roller | YES | Lightly wipe the surface clean of foreign matter using hydro-wipe (65AA-99##).<br>Note: Do not apply a strong force to the surface of the charging roller, as doing so can damage the surface. |
| 3 | Photo conductor section | Dirt, scratches, or foreign matter on the photo conductor. | YES | • Clean.<br>• Replace the drum unit. |
| 4 | Photo conductor section | There is a positive contact between the electrostatic charger application terminals and the high voltage unit connection terminals. | NO | Clean or correct the terminal. |
| 5 | Developing section | Toner bristles not even on the developing roller, resulting in a void area. | YES | Replace the developing unit. |
| 6 | 1st transfer section | There is a positive contact between the transfer belt application terminals and the high voltage unit connection terminals (Y: T1-4; M: T1-3; C: T1-2; K: T1-1). | NO | Clean or correct the terminal. |
| 7 | Connector connection | Faulty connector connection the high voltage unit (CN1, CN2), MFP board (CN18, CN22E, CN36E) and PH relay board (CN1, CN2). | YES | Reconnect the connector. |

| Step | Section | Check item for the faulty color | Result | Action for the faulty color |
|---|---|---|---|---|
| 8 | Service Mode -> Initialize + Image Stabilization | Select [Service Mode] -> [Imaging Process Adjustment] -> [Stabilizer] -> [Initialize + Image Stabilization] and [Gradation Adjust], and the image trouble is eliminated. | YES | Readjust. |
| | | | NO | • Replace the drum unit.<br>• Replace the PH unit.<br>• Replace the high voltage unit. |

### (4) 4-color troubleshooting procedure

| Step | Section | Check item | Result | Action |
|---|---|---|---|---|
| 1 | Image Transfer Belt Unit | Dirt, scratches, or foreign matter on the transfer belt. | YES | • Clean.<br>• Replace the transfer belt unit. |
| 2 | 2nd transfer section | Dirt or foreign matter on the 2nd transfer roller. | YES | • Remove the foreign matter.<br>• Replace the transfer roller unit. |
| 3 | Paper path | There is dirty or foreign matter on paper path. | YES | Check and clean the paper path including the duplex section. |
| 4 | Connector connection | Faulty connector connection the high voltage unit (CN1, CN2) and MFP board (CN22E, CN36E). | YES | Reconnect the connector. |
| 5 | Service Mode -> Initialize + Image Stabilization | Select [Service Mode] -> [Imaging Process Adjustment] -> [Stabilizer] -> [Initialize + Image Stabilization] and [Gradation Adjust], and the image trouble is eliminated. | YES | Readjust. |
| | | | NO | Replace the high voltage unit. |

## 15.3.12 Color spot

### (1) Typical faulty images

The arrow in the exemplary image troubles indicates the paper feeding direction.

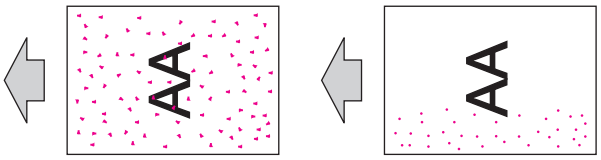


### (2) Initial troubleshooting procedure

| Step | Section | Check item | Result | Action |
|---|---|---|---|---|
| 1 | Paper Setting | The paper to be used for printing does not match the paper type and size of paper setting selected on the machine. | YES | Make the paper setting again on the machine. |
| 2 | IDC sensor | • IDC sensor is dirty.<br>• IDC sensor shutter does not operate properly. | YES | • Clean.<br>• Clean or correct the IDC sensor shutter. |
| 3 | Service Mode -> Stabilizer | Select [Service Mode] -> [Imaging Process Adjustment] -> [Stabilizer] -> [Stabilization Only] and the image trouble is eliminated. | NO | Go to the next step. |
| 4 | Service Mode -> Gradation Adjust | Select [Service Mode] -> [Imaging Process Adjustment] -> [Gradation Adjust] and the image trouble is eliminated. | NO | Go to the next step. |
| 5 | Service Mode -> Charge AC Output fine adjustment | Fine color spots evident on the left-hand side with respect to the paper feeding direction. Or fine color spots are evident on a particular portion in the paper. The color spots are reduced when [Charge AC Output fine adjustment] are selected and the setting value is increased. | NO | Return the setting value to the original one and go to the next step. |
| 6 | Service Mode -> Primary transfer adj. | Select [Service Mode] -> [Imaging Process Adjustment] -> [Transfer Voltage Fine Adj] and the image trouble is eliminated.<br>* Decrease the setting value for color spots. | NO | Return the setting value to the original one and go to the next step. |
| 7 | Image check | • Select [Service Mode] -> [Test Mode] -> [Solid Pattern]. Select "SINGLE", "HYPER", "Gradation", and "1-Sided", enter "64" for Density, and load tray 2 with A3 paper. Press the start key. This runs a print cycle of 4 colors on one sheet of paper.<br>• Check the image after printing to determine which color causes the abnormal image. | 1 to 3 colors | Go to the 1-color troubleshooting procedure. |
| | | | 4 colors | Go to the 4-color troubleshooting procedure. |
| | | | Not available | Go to scanner troubleshooting procedure. |

### (3) 1-color troubleshooting procedure

| Step | Section | Check item for the faulty color | Result | Action for the faulty color |
|---|---|---|---|---|
| 1 | Write section | Dirt or foreign matter on the dust-proof glass of the PH. | YES | Clean the PH window. |
| 2 | Charging section | Foreign matter on charging roller | YES | Lightly wipe the surface clean of foreign matter using hydro-wipe (65AA-99##).<br>Note: Do not apply a strong force to the surface of the charging roller, as doing so can damage the surface. |
| 3 | Photo conductor section | Dirt, scratches, or foreign matter on the photo conductor. | YES | • Clean.<br>• Replace the drum unit. |
| 4 | Photo conductor section | There is a positive contact between the electrostatic charger application terminals and the high voltage unit connection terminals. | NO | Clean or correct the terminal. |
| 5 | Developing section | There is a positive contact between the developing bias application terminals and the high voltage unit connection terminals (Y: B4; M: B3; C: B2; K: B1). | NO | Clean or correct the terminal. |
| 6 | Connector connection | Faulty connector connection the high voltage unit (CN1, CN2), MFP board (CN18, CN22E, CN36E) and PH relay board (CN1, CN2). | YES | Reconnect the connector. |
| 7 | Service Mode -> Initialize + Image Stabilization | Select [Service Mode] -> [Imaging Process Adjustment] -> [Stabilizer] -> [Initialize + Image Stabilization] and [Gradation Adjust], and the image trouble is eliminated. | YES | Readjust. |
| | | | NO | • Replace the drum unit.<br>• Replace the PH unit.<br>• Replace the high voltage unit. |

### (4) 4-color troubleshooting procedure

| Step | Section | Check item | Result | Action |
|---|---|---|---|---|
| 1 | Transfer belt unit | Dirt, scratches, or foreign matter on the transfer belt. | YES | • Clean.<br>• Replace the transfer belt unit. |
| 2 | 2nd transfer section | Dirt or foreign matter on the 2nd transfer roller. | YES | • Remove the foreign matter.<br>• Replace the transfer roller unit. |
| 3 | Paper path | There is dirty or foreign matter on paper path. | YES | Check and clean the paper path including the duplex section. |
| 4 | Connector connection | Faulty connector connection the high voltage unit (CN1, CN2) and MFP board (CN22E, CN36E). | YES | Reconnect the connector. |
| 5 | Service Mode -> Initialize + Image Stabilization | Select [Service Mode] -> [Imaging Process Adjustment] -> [Stabilizer] -> [Initialize + Image Stabilization] and [Gradation Adjust], and the image trouble is eliminated. | YES | Readjust. |
| | | | NO | Replace the high voltage unit. |

### (5) Scanner troubleshooting procedure

| Step | Section | Check item | Result | Action |
|---|---|---|---|---|
| 1 | Original | Original is damaged or dirty. | YES | Change the original. |
| 2 | Original Type | Select [Copy setting] -> [Original Type] and change the setting, and the image trouble is eliminated. | YES | Correct the setting. |
| 3 | When original glass is being used | Original glass or original pad is dirty. | YES | Clean. |
| | | | NO | Replace the CCD board. |
| 4 | • When DF-704/DF-629 is being used: 1st side<br>• When DF-629 is being used: 2nd side | Document reading glass or document reading glass cleaning brush is dirty. | YES | Clean. |
| | | | NO | • Replace the LED exposure unit.<br>• Replace the CCD board. |
| 5 | When DF-704 is being used: 2nd side | CIS glass or CIS cleaning brush is dirty. | YES | Clean. |
| | | | NO | Replace the CIS module. |

## 15.3.13 Blurred image

### (1) Typical faulty images

The arrow in the exemplary image troubles indicates the paper feeding direction.




### (2) Initial troubleshooting procedure

| Step | Section | Check item | Result | Action |
|---|---|---|---|---|
| 1 | Damp paper | Paper is damp. | YES | Change paper to one just unwrapped from its package. |
| 2 | Paper Setting | The paper to be used for printing does not match the paper type and size of paper setting selected on the machine. | YES | Make the paper setting again on the machine. |
| 3 | Service Mode -> Stabilizer | Select [Service Mode] -> [Imaging Process Adjustment] -> [Stabilizer] -> [Stabilization Only] and the image trouble is eliminated. | NO | Go to the next step. |
| 4 | Service Mode -> Gradation Adjust | Select [Service Mode] -> [Imaging Process Adjustment] -> [Gradation Adjust] and the image trouble is eliminated. | NO | Go to the next step. |
| 5 | Image check | • Select [Service Mode] -> [Test Mode] -> [Lattice Pattern]. Select "SINGLE", "HYPER", "Gradation", "1-Sided", "CMYK", "600dpi", and "Normal", enter "10" for CD width, "10" for FD width, and "64" for Density, and load tray 2 with A3 paper. Press the start key. This runs a print cycle for C, M, Y, and K in that order.<br>• Check the image after printing and the abnormal image is evident. | YES | Go to engine troubleshooting procedure. |
| | | | NO | Go to scanner troubleshooting procedure. |

### (3) Engine troubleshooting procedure

| Step | Section | Check item | Result | Action |
|---|---|---|---|---|
| 1 | Write section | Dirt or foreign matter on the dust-proof glass of the PH of the color which is responsible for the abnormal image. | YES | Clean the PH window. |
| 2 | Charging section | Foreign matter on charging roller of the color which is responsible for the abnormal image. | YES | Lightly wipe the surface clean of foreign matter using hydro-wipe (65AA-99##).<br>Note: Do not apply a strong force to the surface of the charging roller, as doing so can damage the surface. |
| 3 | Photo conductor section | Dirt or foreign matter on the photo conductor of the PH of the color which is responsible for the abnormal image. | YES | • Clean.<br>• Replace the drum unit. |
| | | | NO | Replace the PH unit. |

### (4) Scanner troubleshooting procedure

| Step | Section | Check item | Result | Action |
|---|---|---|---|---|
| 1 | Original | Original is folded, bent, or raised. | YES | Change the original. |
| 2 | Original Type | Select [Copy setting] -> [Original Type] and change the setting, and the image trouble is eliminated. | YES | Correct the setting. |
| 3 | When original glass is being used | Original glass tilts. | YES | Corrected to the correct position. |
| 4 | Parts along scanning path | Mirror, lens, light guide or reflectors is dirty. | YES | Clean. |
| 5 | Parts along scanning path | Mirror, lens, light guide or reflectors is tilted. | YES | Corrected to the correct position. |
| | | | NO | Replace the CCD board. |
| 6 | When DF is being used | DF does not lie flat. | YES | • Adjust the DF height. (DF-704/DF-629)<br>• Replace DF if it is deformed or hinges are broken. |
| 7 | • When DF-704/DF-629 is being used: 1st side<br>• When DF-629 is being used: 2nd side | Document reading glass tilts. | YES | Corrected to the correct position. |
| | | | NO | • Replace the LED exposure unit.<br>• Replace the CCD board. |

| Step | Section | Check item | Result | Action |
|---|---|---|---|---|
| 8 | When DF-704 is being used: 2nd side | CIS glass or CIS cleaning brush is tilted. | YES | Corrected to the correct position. |
| | | | NO | Replace the CIS module. |

### 15.3.14 Back marking

#### (1) Typical faulty images

The arrow in the exemplary image troubles indicates the paper feeding direction.

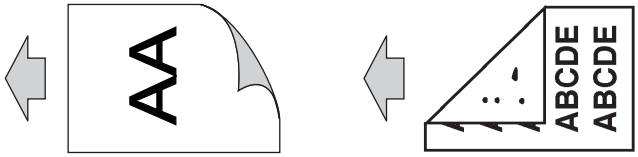


#### (2) Troubleshooting procedure

| Step | Section | Check item | Result | Action |
|---|---|---|---|---|
| 1 | Paper Setting | The paper to be used for printing does not match the paper type and size of paper setting selected on the machine. | YES | Make the paper setting again on the machine. |
| 2 | Paper path | There is dirty or foreign matter on paper path. | YES | Check and clean the paper path including the duplex section. |
| 3 | 2nd transfer section | Dirt or foreign matter on the 2nd transfer roller. | YES | • Remove the foreign matter.<br>• Replace the transfer roller unit. |
| 4 | Fusing unit | There is dirty or foreign matter on paper path of fusing unit. | YES | Clean. (Disassembling the fusing unit is prohibited.) |
| 5 | Fusing unit | Scratches on belt and roller in fusing unit. | YES | Replace the fusing unit. |
| | | | NO | Replace the high voltage unit. |

### 15.3.15 Blank copy, Black copy

#### (1) Typical faulty images

The arrow in the exemplary image troubles indicates the paper feeding direction.

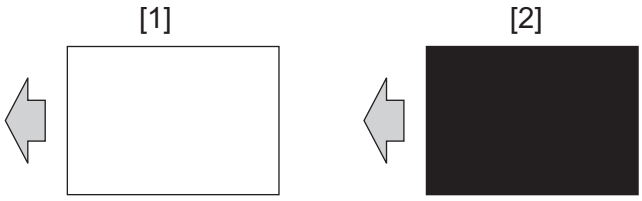


| [1] Blank copy | [2] Black copy |
|---|---|

#### (2) Initial troubleshooting procedure

| Step | Section | Check item | Result | Action |
|---|---|---|---|---|
| 1 | Service Mode -> Stabilizer | Select [Service Mode] -> [Imaging Process Adjustment] -> [Stabilizer] -> [Stabilization Only] and the image trouble is eliminated. | NO | Go to the next step. |
| 2 | Image check | • Select [Service Mode] -> [Test Mode] -> [Solid Pattern]. Select "SINGLE", "HYPER", "Gradation", and "1-Sided", enter "120" for Density, and load tray 2 with A3 paper. This runs a print cycle of 4 colors on one sheet of paper.<br>• Check the image after printing and the abnormal image is evident. | YES | Go to engine troubleshooting procedure. |
| | | | NO | Go to scanner troubleshooting procedure. |

#### (3) Engine troubleshooting procedure

| Step | Section | Check item | Result | Action |
|---|---|---|---|---|
| 1 | 2nd transfer section | There is a positive contact between the application terminals of the 2nd transfer and the connection terminals (T2, E) and ground terminal of the high voltage unit. | NO | Clean or correct the terminal. |
| 2 | Image Transfer Belt Unit | With the color of toner responsible for the abnormal image, there is a positive contact between the transfer | NO | Clean or correct the terminal. |

| Step | Section | Check item | Result | Action |
|---|---|---|---|---|
| | | belt application terminals and the high voltage unit connection terminals (Y: T1-4; M: T1-3; C: T1-2; K: T1-1). | | |
| 3 | Photo conductor section | The drum unit of the color of toner responsible for the abnormal image is installed properly. | NO | Reinstall. |
| 4 | Photo conductor section | With the color of toner responsible for the abnormal image, there is a positive contact between the drum charge corona bias application terminals and the high voltage unit connection terminals. | NO | Clean or correct the terminal. |
| 5 | Developing section | With the color of toner responsible for the abnormal image, there is a positive contact between the developing bias application terminals and the high voltage unit connection terminals (Y: B4; M: B3; C: B2; K: B1). | NO | Clean or correct the terminal. |
| 6 | Connector connection | Faulty connector connection the high voltage unit (CN1, CN2) and MFP board (CN22E, CN36E). | YES | Reconnect the connector. |
| 7 | Write section | Faulty connector connection the MFP board (CN18) and PH relay board (CN1, CN2). | YES | Reconnect the connector. |
| 8 | Service Mode -> Selfdiagnostic | Select [Service Mode] -> [State Confirmation] -> [Selfdiagnostic] -> [Check All] and perform the function. Then, "NG" appears. | YES | Take relevant action corresponding to the check item in which "NG" has appeared. |
| | | | NO | • Replace the high voltage unit.<br>• Replace the MFP board.<br>• Replace the PH unit. |

### (4) Scanner troubleshooting procedure

| Step | Section | Check item | Result | Action |
|---|---|---|---|---|
| 1 | Black copy: Scanner section | Foreign matter on scanner rails.<br>Faulty the drive shaft and pulley shaft. | YES | Clean and apply lubricant. *1 *2 |
| 2 | | Scanner moves smoothly. | NO | • Adjust the scanner motor drive belt.<br>• Replace the scanner motor.<br>• Replace the scanner drive board. |
| 3 | • When original glass is being used<br>• When DF-704/DF-629 is being used: 1st side | None of the terminal pins of the connection cable between the CCD board (CN3) and the MFP board (CN7) is bent and a positive connection is made. | NO | Reconnect the connector. |
| 4 | • When original glass is being used<br>• When DF-704/DF-629 is being used: 1st side<br>• When DF-629 is being used: 2nd side | Replace the connection cable between the machine and the DF. This eliminates the trouble. | YES | Replace the connection cable. |
| 5 | • When original glass is being used<br>• When DF-704/DF-629 is being used: 1st side<br>• When DF-629 is being used: 2nd side | Select [Service Mode] -> [State Confirmation] -> [Selfdiagnostic] -> [Check All] and perform the function. Then, "NG" appears. | YES | Take relevant action corresponding to the check item in which "NG" has appeared. |
| | | | NO | • Replace the CCD board.<br>• Replace the MFP board. |
| 6 | When DF-704 is being used: 2nd side | Faulty connector connection the CIS power supply unit (J1), relay connector (P6), main body connection section (P1) and DC power supply (CN4). | YES | Reconnect the connector. |
| 7 | When DF-704 is being used: 2nd side | Faulty connector connection the CIS module (J221), dual scan image processing board (CN1) and MFP board (CN22). | YES | Reconnect the connector. |
| 8 | When DF-704 is being used: 2nd side | Replace the connection cable between the CIS module and the MFP board. This eliminates the trouble. | YES | Replace the connection cable. |
| 9 | Parts along scanning path | Mirror, lens, light guide or reflectors is tilted. | YES | Corrected to the correct position. |
| 10 | Service Mode -> Selfdiagnostic | Select [Service Mode] -> [State Confirmation] -> [Selfdiagnostic] -> [Check All] and perform the function. Then, "NG" appears. | YES | Take relevant action corresponding to the check item in which "NG" has appeared. |
| | | | NO | • Replace the CIS module.<br>• Replace the dual scan image processing board.<br>• Replace the MFP board. |

*1: Apply DURASURF KD-453S to the shaft. DURASURF is a product manufactured by Harves Co., Ltd. (http://www.harves.co.jp).

*2: Apply FLOIL No. 947P or Launa 40 oil to the scanner rails. FLOIL is a product manufactured by KANTO KASEI LTD. (http://www.kanto-kasei.co.jp/).

### 15.3.16 Uneven pitch

#### (1) Typical faulty images

The arrow in the exemplary image troubles indicates the paper feeding direction.

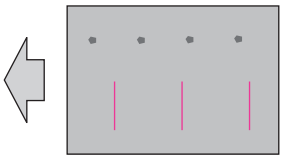

#### (2) Initial troubleshooting procedure

| Step | Section | Check item | Result | Action |
|---|---|---|---|---|
| 1 | Paper Setting | The paper to be used for printing does not match the paper type and size of paper setting selected on the machine. | YES | Make the paper setting again on the machine. |
| 2 | Service Mode -> Stabilizer | Select [Service Mode] -> [Imaging Process Adjustment] -> [Stabilizer] -> [Stabilization Only] and the image trouble is eliminated. | NO | Go to the next step. |
| 3 | Service Mode -> Gradation Adjust | Select [Service Mode] -> [Imaging Process Adjustment] -> [Gradation Adjust] and the image trouble is eliminated. | NO | Go to the next step. |
| 4 | Image check | • Select [Service Mode] -> [Test Mode] -> [Halftone Pattern]. Select "SINGLE", "HYPER", "Gradation", "1-Sided", "CMYK", and "Full Bleed", enter "64" for Density, and load tray 2 with A3 paper. Press the start key. This runs a print cycle for C, M, Y, and K in that order.<br>• Check the image after printing and the abnormal image occurs only with one color. | YES | Go to the 1-color troubleshooting procedure. |
| | | | NO | Go to the 4-color troubleshooting procedure. |

#### (3) 1-color troubleshooting procedure

| Step | Section | Check item for the faulty color | Result | Action for the faulty color |
|---|---|---|---|---|
| 1 | Uneven pitch at 94 mm interval | Dirt, scratches, or foreign matter on the photo conductor. | YES | • Clean.<br>• Replace the drum unit. |
| 2 | Uneven pitch at 28 mm interval | Dirt, scratches, or foreign matter on the developing roller. | YES | • Clean.<br>• Replace the developing unit. |
| 3 | Write section | Dirt or foreign matter on the dust-proof glass of the PH. | YES | Clean the PH window. |
| 4 | Charging section | Foreign matter on charging roller | YES | Lightly wipe the surface clean of foreign matter using hydro-wipe (65AA-99##).<br>Note: Do not apply a strong force to the surface of the charging roller, as doing so can damage the surface. |
| 5 | Connector connection | Faulty connector connection the high voltage unit (CN1, CN2) and MFP board (CN22E, CN36E). | YES | Reconnect the connector. |
| | | | NO | • Replace the high voltage unit.<br>• Replace the MFP board. |

#### (4) 4-color troubleshooting procedure

| Step | Section | Check item | Result | Action |
|---|---|---|---|---|
| 1 | Uneven pitch | Dirt, scratches, or foreign matter on the transfer belt. | YES | • Clean.<br>• Replace the transfer belt unit. |
| 2 | Uneven pitch at 64 mm interval | Dirt or foreign matter on the 2nd transfer roller. | YES | • Remove the foreign matter.<br>• Replace the transfer roller unit. |
| 3 | Uneven pitch at 157 mm interval | Dirt, scratches, or foreign matter on the fusing belt. | YES | • Clean.<br>• Replace the fusing unit. |
| 4 | Uneven pitch at 94 mm interval | Dirt, scratches, or foreign matter on the fusing pressure roller. | YES | • Clean.<br>• Replace the fusing unit. |
| 5 | Paper path | There is dirty or foreign matter on paper path. | YES | Check and clean the paper path including the duplex section. |

| Step | Section | Check item | Result | Action |
|---|---|---|---|---|
| | | | NO | • Replace the transfer belt unit.<br>• Replace the high voltage unit.<br>• Replace the MFP board. |

### 15.3.17 Uneven gloss, rough gloss

#### (1) Typical faulty images

The arrow in the exemplary image troubles indicates the paper feeding direction.

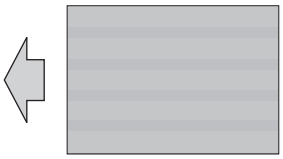

#### (2) Troubleshooting procedure

| Step | Section | Check item | Result | Action |
|---|---|---|---|---|
| 1 | Paper Setting | The paper to be used for printing does not match the paper type and size of paper setting selected on the machine. | YES | Make the paper setting again on the machine. |
| 2 | Image check | • Select [Service Mode] -> [Test Mode] -> [Halftone Pattern]. Select "SINGLE", "HYPER", "Gradation", "1-Sided", "Black (1PC)", and "Full Bleed", enter "255" for Density, and load tray 2 with A3 paper. Press the start key. This runs a print cycle.<br>• Check the image after printing and the abnormal image is evident. (rough gloss) | YES | Go to the next step. |
| 3 | Service Mode-> Fusing Temperature | Select [Service Mode] -> [Machine] -> [Fusing Temperature] and lower the fusing temperature, and the image trouble is eliminated. | NO | Return the fusing temperature to the original one and go to the next step. |
| 4 | Exit tray front roller, Exit roller | Faulty pressure operation of the exit tray front roller or exit roller. | YES | Correct. |
| 5 | Fusing unit | There is dirty or foreign matter on paper path of fusing unit. | YES | Clean. (Disassembling the fusing unit is prohibited.) |
| 6 | Fusing unit | Scratches on belt and roller in fusing unit. | YES | Replace the fusing unit. |
| | | | NO | Replace the power supply of fusing. |

### 15.3.18 Poor fusing performance, Offset

#### (1) Typical faulty images

The arrow in the exemplary image troubles indicates the paper feeding direction.

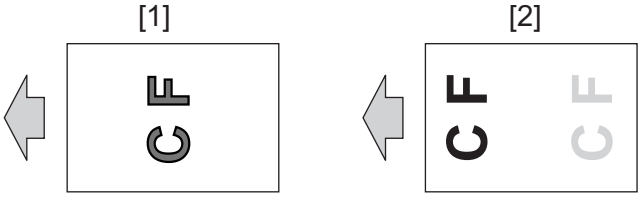


| [1] | Poor fusing performance | [2] | Offset |
|---|---|---|---|

#### (2) Troubleshooting procedure

| Step | Section | Check item | Result | Action |
|---|---|---|---|---|
| 1 | Paper Setting | The paper to be used for printing does not match the paper type and size of paper setting selected on the machine. | YES | Make the paper setting again on the machine. |
| 2 | Image check: Poor fusing performance | • Select [Service Mode] -> [Test Mode] -> [Halftone Pattern]. Select "SINGLE", "HYPER", "Gradation", "1-Sided", "Black (1PC)", and "Full Bleed", enter "64" for Density, and load tray 2 with A3 paper. Press the start key. This runs a print cycle.<br>• Check the image after printing and the abnormal image is evident. | YES | Go to the next step. |
| 3 | Image check: Poor fusing performance | • Select [Service Mode] -> [System 2] -> [Smart Fusing Control] and select [Prohibit]. | YES | Return the setting to the original one and go to the next step. |

| Step | Section | Check item | Result | Action |
|---|---|---|---|---|
| | | • Check the image after printing and the abnormal image is evident. | | |
| 4 | Image check: Offset | • Select [Service Mode] -> [Test Mode] -> [Gradation Pattern]. Select "SINGLE", "HYPER", "Gradation", "1-Sided", "8 Color", "Front Half", and "12 gradations", and load tray 2 with A3 paper. Press the start key. This runs a print cycle.<br>• Check the image after printing and the abnormal image is evident. | YES | Go to the next step. |
| 5 | Service Mode -> Fusing Temperature | Select [Service Mode] -> [Machine] -> [Fusing Temperature] and make the necessary adjustment, and the image trouble is eliminated.<br>* Poor fusing performance: Decrease the setting value<br>* Offset: Increase the setting value | NO | Return the setting value to the original one and go to the next step. |
| 6 | Fusing unit | There is dirty or foreign matter on paper path of fusing unit. | YES | Clean. (Disassembling the fusing unit is prohibited.) |
| 7 | Fusing unit | Scratches on belt and roller in fusing unit. | YES | Replace the fusing unit. |
| | | | NO | Replace the power supply of fusing. |

### 15.3.19 Brush effect, Image bleeding

#### (1) Typical faulty images

The arrow in the exemplary image troubles indicates the paper feeding direction.

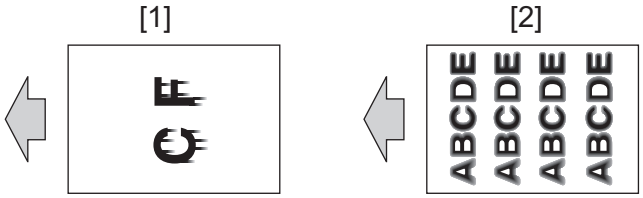


| [1] Brush effect | [2] Image bleeding |
|---|---|

#### (2) Initial troubleshooting procedure

| Step | Section | Check item | Result | Action |
|---|---|---|---|---|
| 1 | Paper Setting | The paper to be used for printing does not match the paper type and size of paper setting selected on the machine. | YES | Make the paper setting again on the machine. |
| 2 | Damp paper | Paper is damp. | YES | Change paper to one just unwrapped from its package. |
| 3 | Service Mode -> Stabilizer | Select [Service Mode] -> [Imaging Process Adjustment] -> [Stabilizer] -> [Stabilization Only] and the image trouble is eliminated. | NO | Go to the next step. |
| 4 | Service Mode -> Gradation Adjust | Select [Service Mode] -> [Imaging Process Adjustment] -> [Gradation Adjust] and the image trouble is eliminated. | NO | Go to the next step. |
| 5 | Image check | • Select [Service Mode] -> [Test Mode] -> [Lattice Pattern]. Select "SINGLE", "HYPER", "Gradation", "1-Sided", "CMYK", "600dpi", and "Normal", enter "10" for CD width, "10" for FD width, and "64" for Density, and load tray 2 with A3 paper. Press the start key. This runs a print cycle for C, M, Y, and K in that order.<br>• Check the image after printing and the abnormal image is evident. | YES | Go to the next step. |
| 6 | Transfer belt unit | Dirt, scratches, or foreign matter on the transfer belt. | YES | • Clean.<br>• Replace the transfer belt unit. |
| 7 | 2nd transfer section | Dirt or foreign matter on the 2nd transfer roller. | YES | • Remove the foreign matter.<br>• Replace the transfer roller unit. |
| 8 | Service Mode -> Fusing Temperature | Select [Service Mode] -> [Machine] -> [Fusing Temperature] and make the necessary adjustment, and the image trouble is eliminated.<br>* Increase or decrease the setting value | NO | Return the setting value to the original one and go to the next step. |
| 9 | Service Mode -> Fusing Transport Speed | Select [Service Mode] -> [Machine] -> [Fusing Transport Speed] and make the necessary adjustment, and the image trouble is eliminated.<br>* Brush effect: Increase or decrease the setting value * Image bleeding: Decrease the setting value | NO | Return the setting value to the original one and go to the next step. |

| Step | Section | Check item | Result | Action |
|---|---|---|---|---|
| 10 | Fusing unit | There is dirty or foreign matter on paper path of fusing unit. | YES | Clean. (Disassembling the fusing unit is prohibited.) |
| 11 | Fusing unit | Scratches on belt and roller in fusing unit. | YES | Replace the fusing unit. |
| | | | NO | Replace the power supply of fusing. |

### 15.3.20 Blurred fine lines

#### (1) Typical faulty images

The arrow in the exemplary image troubles indicates the paper feeding direction.

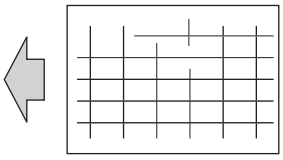

#### (2) Initial troubleshooting procedure

| Step | Section | Check item | Result | Action |
|---|---|---|---|---|
| 1 | Damp paper | Paper is damp. | YES | Change paper to one just unwrapped from its package. |
| 2 | Paper Setting | The paper to be used for printing does not match the paper type and size of paper setting selected on the machine. | YES | Make the paper setting again on the machine. |
| 3 | Unclear thin line in main scan direction | Select [Service Mode] -> [Machine] -> [LD adjustment] -> [LD Light Width Adjustment] and the image trouble is eliminated. | NO | Return the setting value to the original one and go to the next step. |
| 4 | Service Mode -> Stabilizer | Select [Service Mode] -> [Imaging Process Adjustment] -> [Stabilizer] -> [Stabilization Only] and the image trouble is eliminated. | NO | Go to the next step. |
| 5 | Service Mode -> Gradation Adjust | Select [Service Mode] -> [Imaging Process Adjustment] -> [Gradation Adjust] and the image trouble is eliminated. | NO | Go to the next step. |
| 6 | Image check | • Select [Service Mode] -> [Test Mode] -> [Lattice Pattern]. Select "SINGLE", "FEET", "1-Sided", "CMYK", "600dpi", and "Normal", enter "3" for CD width, "3" for FD width, and "255" for Density, and load tray 2 with A3 paper. Press the start key. This runs a print cycle for C, M, Y, and K in that order.<br>• Check the image after printing and the abnormal image is evident. | YES | Go to engine troubleshooting procedure. |
| | | | NO | Go to scanner troubleshooting procedure. |

#### (3) Engine troubleshooting procedure

| Step | Section | Check item | Result | Action |
|---|---|---|---|---|
| 1 | Write section | Dirt or foreign matter on the dust-proof glass of the PH of the color which is responsible for the abnormal image. | YES | Clean the PH window. |
| 2 | Charging section | Foreign matter on charging roller of the color which is responsible for the abnormal image. | YES | Lightly wipe the surface clean of foreign matter using hydro-wipe (65AA-99##).<br>Note: Do not apply a strong force to the surface of the charging roller, as doing so can damage the surface. |
| 3 | Photo conductor section | Dirt or foreign matter on the photo conductor of the PH of the color which is responsible for the abnormal image. | YES | • Clean.<br>• Replace the drum unit. |
| 4 | Image Transfer Belt Unit | Dirt, scratches, or foreign matter on the transfer belt. | YES | • Clean.<br>• Replace the transfer belt unit. |
| | | | NO | Replace the PH unit. |

#### (4) Scanner troubleshooting procedure

| Step | Section | Check item | Result | Action |
|---|---|---|---|---|
| 1 | Original | Original is folded, bent, or raised. | YES | Change the original. |

| Step | Section | Check item | Result | Action |
|---|---|---|---|---|
| 2 | Original Type | Select [Copy setting] -> [Original Type] and change the setting, and the image trouble is eliminated. | YES | Correct the setting. |
| 3 | When original glass is being used | Original glass tilts. | YES | Corrected to the correct position. |
| 4 | Parts along scanning path | Mirror, lens, light guide or reflectors is tilted. | YES | Corrected to the correct position. |
| | | | NO | Replace the CCD board. |
| 5 | When DF is being used | DF does not lie flat. | YES | • Adjust the DF height. (DF-704/DF-629)<br>• Replace DF if it is deformed or hinges are broken. |
| 6 | • When DF-704/DF-629 is being used: 1st side<br>• When DF-629 is being used: 2nd side | Document reading glass tilts. | YES | Corrected to the correct position. |
| | | | NO | • Replace the LED exposure unit.<br>• Replace the CCD board. |
| 7 | When DF-704 is being used: 2nd side | CIS glass or CIS cleaning brush is tilted. | YES | Corrected to the correct position. |
| | | | NO | Replace the CIS module. |

### 15.3.21 Moire

#### (1) Typical faulty images

The arrow in the exemplary image troubles indicates the paper feeding direction.

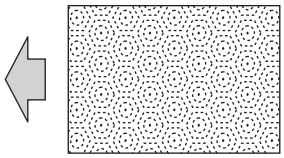

#### (2) Initial troubleshooting procedure

| Step | Section | Check item | Result | Action |
|---|---|---|---|---|
| 1 | Original | Original is damaged or dirty. | YES | Change the original. |
| 2 | Original Type | Select [Copy setting] -> [Original Type] and change the setting, and the image trouble is eliminated. | NO | Go to the next step. |
| 3 | Original direction | Change the direction in which the original is placed. This eliminates moire. | YES | Change the original direction. |
| 4 | Service Mode -> Stabilizer | Select [Service Mode] -> [Imaging Process Adjustment] -> [Stabilizer] -> [Stabilization Only] and the image trouble is eliminated. | NO | Go to the next step. |
| 5 | Service Mode -> Gradation Adjust | Select [Service Mode] -> [Imaging Process Adjustment] -> [Gradation Adjust] and the image trouble is eliminated. | NO | Go to the next step. |
| 6 | Image check | • Select [Service Mode] -> [Test Mode] -> [Halftone Pattern]. Select "SINGLE", "HYPER", "Gradation", "1-Sided", "CMYK", and "Full Bleed", enter "64" for Density, and load tray 2 with A3 paper. Press the start key. This runs a print cycle for C, M, Y, and K in that order.<br>• Check the image after printing and the abnormal image is evident. | YES | Go to engine troubleshooting procedure. |
| | | | NO | Go to scanner troubleshooting procedure. |

#### (3) Engine troubleshooting procedure

| Step | Section | Check item | Result | Action |
|---|---|---|---|---|
| 1 | Service Mode -> Paper Feed Direction Adj. | Select [Service Mode] -> [Machine] -> [Printer Area] -> [Paper Feed Direction Adj.] and make the necessary adjustment, and the image trouble is eliminated. | NO | Go to the next step. |
| 2 | Service Mode -> Initialize + Image Stabilization | Select [Service Mode] -> [Imaging Process Adjustment] -> [Stabilizer] -> [Initialize + Image Stabilization] and [Gradation Adjust], and the image trouble is eliminated. | YES | Readjust. |
| | | | NO | • Replace the PH unit.<br>• Replace the MFP board. |

### (4) Scanner troubleshooting procedure

| Step | Section | Check item | Result | Action |
|---|---|---|---|---|
| 1 | When original glass is being used: Sub Scan Zoom Adj. | Select [Service Mode] -> [Machine] -> [Scan Area] -> [Sub Scan Zoom Adj.] and make the necessary adjustment, and the image trouble is eliminated. | YES | Readjust. |
| | | | NO | Replace the CCD board. |
| 2 | When DF-704/DF-629 is being used: 1st side: Feed Zoom | Select [Service Mode] -> [ADF] -> [Feed Zoom] and make the necessary adjustment, and the image trouble is eliminated. | YES | Readjust. |
| | | | NO | Replace the CCD board. |
| 3 | When DF-704 is being used: 2nd side: FD-Mag. Adj. (B) | Select [Service Mode] -> [ADF] -> [FD-Mag. Adj. (B)] and make the necessary adjustment, and the image trouble is eliminated. | NO | Go to the next step. |
| 4 | When DF-704 is being used: 2nd side: Main Scanning Direction Zoom | Select [Service Mode] -> [ADF] -> [Main Scanning Direction Zoom] and make the necessary adjustment, and the image trouble is eliminated. | YES | Readjust. |
| | | | NO | Replace the CIS module. |

## 15.3.22 Skewed image

### (1) Typical faulty images

The arrow in the exemplary image troubles indicates the paper feeding direction.

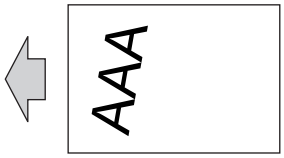


### (2) Initial troubleshooting procedure

| Step | Section | Check item | Result | Action |
|---|---|---|---|---|
| 1 | Original | Original is skew. | YES | • Reposition original.<br>• Use an original that is not skew. |
| 2 | Original direction | Change the direction in which the original is placed. This eliminates the trouble. | YES | Change the original direction. |
| 3 | Paper Setting | The paper to be used for printing does not match the paper type and size of paper setting selected on the machine. | YES | Make the paper setting again on the machine. |
| 4 | Service Mode -> Stabilizer | Select [Service Mode] -> [Imaging Process Adjustment] -> [Stabilizer] -> [Stabilization Only] and the image trouble is eliminated. | NO | Go to the next step. |
| 5 | Service Mode -> Gradation Adjust | Select [Service Mode] -> [Imaging Process Adjustment] -> [Gradation Adjust] and the image trouble is eliminated. | NO | Go to the next step. |
| 6 | Image check | • Select [Service Mode] -> [Test Mode] -> [Lattice Pattern]. Select "SINGLE", "FEET", "1-Sided", "CMYK", "600dpi", and "Normal", enter "5" for CD width, "5" for FD width, and "255" for Density, and load tray 2 with A3 paper. Press the start key. This runs a print cycle for C, M, Y, and K in that order.<br>• Check the image after printing and the abnormal image is evident. | YES | Go to engine troubleshooting procedure. |
| | | | NO | Go to scanner troubleshooting procedure. |

### (3) Engine troubleshooting procedure

| Step | Section | Check item | Result | Action |
|---|---|---|---|---|
| 1 | Paper path | There is dirty or foreign matter on registration roller or paper path. | YES | Clean paper path. |
| 2 | Service Mode -> Printer Reg. Loop Adj. | Select [Service Mode] -> [Machine] -> [Printer Reg. Loop Adj.] and make the necessary adjustment, and the image trouble is eliminated. | NO | Go to the next step. |
| 3 | Service Mode -> Initialize + Image Stabilization | Select [Service Mode] -> [Imaging Process Adjustment] -> [Stabilizer] -> [Initialize + Image Stabilization] and [Gradation Adjust], and the image trouble is eliminated. | YES | Readjust. |
| | | | NO | Check the registration roller. |

### (4) Scanner troubleshooting procedure

Perform the scanner troubleshooting procedure after having made sure that the same image trouble does not occur in the printer system.

| Step | Section | Check item | Result | Action |
|---|---|---|---|---|
| 1 | Parts along scanning path | Mirror, lens, light guide or reflectors is tilted. | YES | Corrected to the correct position. |
| 2 | When original glass is being used | Original glass not installed properly. | YES | • Reinstall Original glass.<br>• Check the original set position. |
| | | | NO | Replace the CCD board. |
| 3 | When DF-704/DF-629 is being used: skew image on both sides | Select [Service Mode] -> [ADF] -> [Registration Loop Adj.] and make the adjustment. This eliminates the problem of skew image. | YES | Readjust. |
| 4 | While DF-704/DF-629 is being used: skew image on front side only | Perform [Adjusting front side skew feed on ADF] of mechanical adjustment. This eliminates the problem of skew image. (DF-704/DF-629) | YES | Readjust. |
| | | | NO | Replace the CCD board. |
| 5 | While DF-704 is being used: skew image on back side only | Perform [Adjusting back side skew feed on ADF] of mechanical adjustment. This eliminates the problem of skew image. | YES | Readjust. |
| | | | NO | Replace the CIS module. |

### 15.3.23 Distorted image

#### (1) Typical faulty images

The arrow in the exemplary image troubles indicates the paper feeding direction.

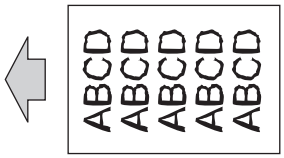


#### (2) Troubleshooting procedure

| Step | Section | Check item | Result | Action |
|---|---|---|---|---|
| 1 | Installation state | Machine not installed on a flat site. | YES | Install the machine horizontally. |
| 2 | Original Type | Select [Copy setting] -> [Original Type] and change the setting, and the image trouble is eliminated. | YES | Correct the setting. |
| 3 | When original glass is being used | Original glass not installed properly. | YES | Corrected to the correct position. |
| | | | NO | Replace the CCD board. |
| 4 | Parts along scanning path | Mirror, lens, light guide, or reflectors are not installed properly. | YES | Corrected to the correct position. |
| 5 | • When DF-704/DF-629 is being used: Distortion on 1st side<br>• When DF-629 is being used: Distortion on 2nd side | CCD board not installed properly. | YES | Corrected to the correct position. |
| | | | NO | Replace the CCD board. |
| 6 | When DF-704 is being used: Distortion on 2nd side | CIS module not installed properly. | YES | Corrected to the correct position. |
| | | | NO | Replace the CIS module. |

### 15.3.24 ACS malfunction

#### (1) Typical faulty images

The arrow in the exemplary image troubles indicates the paper feeding direction.

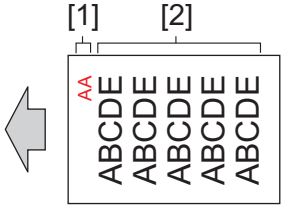


| | | | |
|---|---|---|---|
| [1] | Color original section | [2] | Black and white original section |

#### (2) Troubleshooting procedure

| Procedure | Section | Check item | Result | Action |
|---|---|---|---|---|
| 1 | Original Type | Select [Copy setting] -> [Original Type] and change the setting, and the image trouble is eliminated. | YES | Correct the setting. |
| 2 | Original direction | Change the direction in which the original is placed. This eliminates the trouble. | YES | Change the original direction. |

| Procedure | Section | Check item | Result | Action |
|---|---|---|---|---|
| 3 | User Settings -> Auto Color Level Adjust. | Select [Utility] -> [User Settings] -> [System Settings] -> [Auto Color Level Adjust.] and the image trouble is eliminated. | YES | Readjust. |
| | | | NO | • Change the original direction.<br>• Make the setting according to the type of original. (If the original contains a colored area at its corner, colored area detection NG may result.) |

### 15.3.25 Abnormal image

#### (1) Typical faulty images

The arrow in the exemplary image troubles indicates the paper feeding direction.

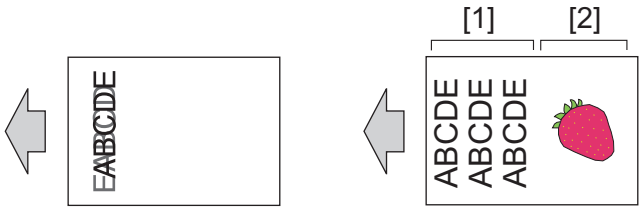


| [1] | Data on the previous page | [2] | Data on the next page |
|---|---|---|---|

#### (2) Troubleshooting procedure

| Step | Section | Check item | Result | Action |
|---|---|---|---|---|
| 1 | When original glass is being used<br>When DF-704/DF-629 is being used: 1st side | None of the terminal pins of the connection cable between the CCD board (CN3) and the MFP board (CN7) is bent and a positive connection is made. | NO | Reconnect the connector. |
| 2 | When original glass is being used<br>When DF-704/DF-629 is being used: 1st side | Replace the connection cable between the CCD board and the MFP board. This eliminates the trouble. | YES | Replace the connection cable. |
| | | | NO | • Replace the CCD board.<br>• Replace the MFP board. |
| 3 | When DF-704 is being used: 2nd side | Faulty connector connection the CIS power supply unit (J1), relay connector (P6), main body connection section (P1) and DC power supply (CN4). | YES | Reconnect the connector. |
| 4 | When DF-704 is being used: 2nd side | Faulty connector connection the CIS module (J221), dual scan image processing board (CN1) and MFP board (CN22). | YES | Reconnect the connector. |
| 5 | When DF-704 is being used: 2nd side | Replace the connection cable between the CIS module and the dual scan image processing board. This eliminates the trouble. | YES | Replace the connection cable. |
| 6 | Service Mode -> Selfdiagnostic | Select [Service Mode] -> [State Confirmation] -> [Selfdiagnostic] -> [Check All] and perform the function. Then, "NG" appears. | YES | Take relevant action corresponding to the check item in which "NG" has appeared. |
| | | | NO | • Replace the CIS module.<br>• Replace the dual scan image processing board.<br>• Replace the MFP board. |

# 16. IC PROTECTOR

## 16.1 Outline

- To increase product safety, this MFP has an IC protector (ICP) installed in each board. ICP is a component that protects IC. If the amount of the current supplied to the electrical parts such as motor exceeds the set level, ICP trips to protect IC from over current.
  The following list contains ICP installed in each board, related devices, and symptoms that occur when ICP trips.

## 16.2 IC protector list

### 16.2.1 bizhub C368/C308/C258

#### (1) MFP board

| ICP No. | Symbol | Target part name | When ICP trips | |
|---|---|---|---|---|
| | | | Symptom in each load | Trouble code and others |
| ICP1E | - | LCC, cabinet | No operation | C0202, C0204, C0206, C0208, C0210 |
| | | | Misfeed at transport section | - |
| ICP2E | CL6 | ADU transport clutch | Misfeed at duplex transport section | - |
| | CL5 | 1st transfer pressure clutch | Transfer belt fault at initial position return | C2152 |
| | CL8 | Paper exit clutch | Misfeed at exit section | - |
| | CL3 | Tray 1 paper feed clutch | Misfeed at tray 1 feed section | - |
| | CL1 | Tray 2 paper feed clutch | Misfeed at tray 2 feed section | - |
| | CL2 | Tray2 vertical transport clutch | Misfeed at tray 2 feed section | - |
| | CL7 | Bypass paper feed clutch | Misfeed at manual bypass feed section | - |
| ICP3E | SD4 | Developing solenoid | Faulty image | - |
| | SD3 | Gate switch solenoid | Misfeed at exit section | - |
| | SD1 | Bypass pick-up solenoid | Manual feed up/down abnormality | C0211 |
| | FM8 | Paper cooling fan | Paper cooling fan failure to turn | C3302 |
| ICP4E | FRB | Front side board | Faulty image | - |
| | CL4 | Registration clutch | Misfeed at transport section | - |
| | SD2 | IDC sensor shutter solenoid | Image stabilization abnormally terminated | - |
| ICP7E | USBB | USB board | No operation | - |
| ICP8E | - | 3.3-V DC/DC converter in mechanical controller of MFP board | Engine communication data error | C 5605 |
| | FRB | Front side board | Front side communication error | C5603 |
| ICP9E | - | DF | Unable to be detected | - |
| | - | Scanner unit | Control panel operation failure | - |
| ICP10E | - | Cabinet | Misfeed at LCT paper feed section | - |
| ICP12E | FRB | Front side board (LD board, TCR sensor, DR new detection circuit) | Cyan TCR sensor failure | C2561 |
| | | | Magenta TCR sensor failure | C2562 |
| | | | Yellow TCR sensor failure | C2563 |
| | | | Black TCR sensor failure | C2564 |
| | INDEXB | Index board | - | - |
| | TCSB/Y | Toner cartridge set board/Y | Toner cartridge set board output does not change. | - |
| | TCSB/M | Toner cartridge set board/M | | - |
| | TCSB/C | Toner cartridge set board/C | | - |
| | TCSB/K | Toner cartridge set board/K | | - |
| ICP14E | FM14 | Exhaust fan/1 | Clean unit fan failure to turn | C5360 |
| | FM15 | Exhaust fan/2 | | |
| | FM16 | Suction fan | | |
| ICP15E | HV | High voltage unit | Faulty image | - |

### 16.2.2 PC-410

#### (1) PC control board

| ICP No. | Symbol | Target part name | When ICP trips | |
|---|---|---|---|---|
| | | | Symptom in each load | Trouble code and others |
| IC2 | M133 | Shifter motor | LCC shift failure | C0214 |
| | M134 | Elevator motor | LCC lift failure | C0210 |

### 16.2.3 JS-506

#### (1) JS control board

| ICP No. | Symbol | Target part name | When ICP trips | |
|---|---|---|---|---|
| | | | Symptom in each load | Trouble code and others |
| ICP1 | - | CPU power supply | No operation (Due to no power supply to CPU, FS connection not detected) | - |
| ICP2 | - | DC to DC converter input section 24V line | Unable to produce DC24V in FS and MFP unable to detect FS | - |
| ICP3 | M1 | Tray shift motor | Shift motor drive malfunction | C1182 |

### 16.2.4 FS-534/FS-534SD

#### (1) FS control board

| ICP No. | Symbol | Target part name | When ICP trips | |
|---|---|---|---|---|
| | | | Symptom in each load | Trouble code and others |
| F1 | - | Between connection with MFP and 24V power line | No operation (Due to no power supply to CPU, FS connection not detected) | - |

#### (2) SD control board (FS-534SD only)

| ICP No. | Symbol | Target part name | When ICP trips | |
|---|---|---|---|---|
| | | | Symptom in each load | Trouble code and others |
| F1 | - | 24V to 5V DC to DC converter | No operation (Due to no power supply to CPU, SD connection not detected) | - |

### 16.2.5 FS-533

#### (1) FS control board

| ICP No. | Symbol | Target part name | When ICP trips | |
|---|---|---|---|---|
| | | | Symptom in each load | Trouble code and others |
| F1 | - | All ICs and actuators | No operation (Due to no power supply to CPU, FS connection not detected) | - |
| CP1 | - | DC to DC converter input section 5V line | No operation (Due to no power supply to CPU, FS connection not detected) | - |
| CP2 | - | Regulator | No operation (Due to no power supply to CPU, FS connection not detected) | - |
| CP3 | - | DC to DC converter input section 24V line | No operation (Due to no power supply to CPU, FS connection not detected) | - |
| CP21 | SD101 | Paper surface detect solenoid | No operation | - |
| CP22 | SD102 | Batch solenoid | No operation | - |
| CP23 | SD103 | Paper exit roller solenoid | No operation | - |
| CP101 | M101 | Paper conveyance motor | Misfeed at transport section | - |
| CP102 | M102 | Paper exit motor | Misfeed at transport section | - |
| CP103 | M103 | Alignment roller motor | Misfeed at transport section | - |
| CP104 | M104 | Exit roller lift up motor | Exit roller pressure/ retraction malfunction | C11A1 |
| CP105 | M105 | Alignment motor/F | Alignment plate motor/F malfunction | C1103 |
| | M106 | Alignment motor/R | Alignment plate motor/R malfunction | C1140 |
| CP107 | M107 | Stapler movement motor | Stapler movement motor malfunction | C1106 |
| CP109 | M109 | Tray lift up motor | Main tray up/down motor drive malfunction | C1102 |

### 16.2.6 PK-519

#### (1) PK control board

| ICP No. | Symbol | Target part name | When ICP trips | |
|---|---|---|---|---|
| | | | Symptom in each load | Trouble code and others |
| F201 | M201 | Punch motor | Punch drive motor malfunction | C1132 |

# L PARTS/CONNECTOR LAYOUT DRAWING

## 1. PARTS LAYOUT DRAWING

### 1.1 bizhub C368/C308/C258

#### 1.1.1 Scanner section

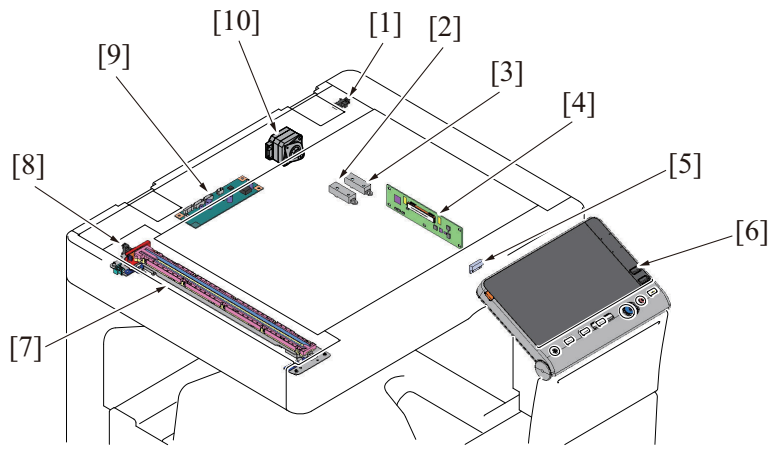


| | | | |
|---|---|---|---|
| [1] | Angle sensor (PS202) | [2] | Original size sensor/1 (PS204) |
| [3] | Original size sensor/2 (PS205) * | [4] | CCD board (CCDB) |
| [5] | Original cover sensor (RS201) | [6] | Control panel unit |
| [7] | LED exposure unit (LU201) | [8] | Scanner home sensor (PS201) |
| [9] | Scanner drive board (SCDB) | [10] | Scanner motor (M201) |

*: Excluding Japan models

#### 1.1.2 Front side

**(1) Board/switch/sensor/others**

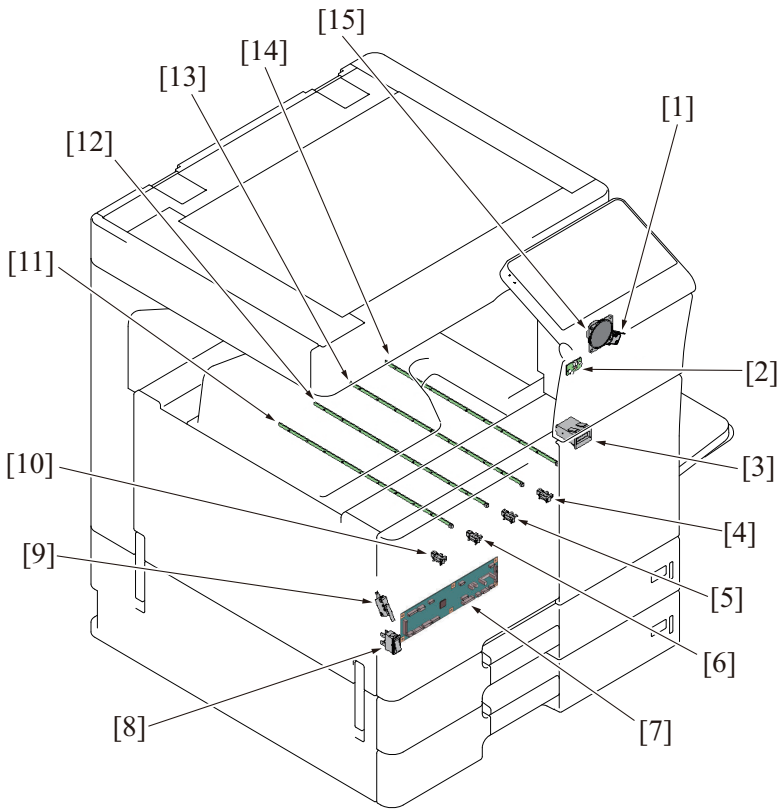

| | | | |
|---|---|---|---|
| [1] | Right door switch (SW3) | [2] | Machine condition monitor board (MCMB) |
| [3] | Total counter (TCT) * | [4] | Toner empty sensor/K (PS31) |
| [5] | Toner empty sensor/C (PS32) | [6] | Toner empty sensor/M (PS33) |
| [7] | Front side board (FRB) | [8] | Main power switch (SW1) |
| [9] | Front door switch (SW2) | [10] | Toner empty sensor/Y (PS34) |
| [11] | Erase LED/Y (EL/Y) | [12] | Erase LED/M (EL/M) |
| [13] | Erase LED/C (EL/C) | [14] | Erase LED/K (EL/K) |
| [15] | FAX speaker (SP1) | - | - |

*: Japan only

**(2) Load**

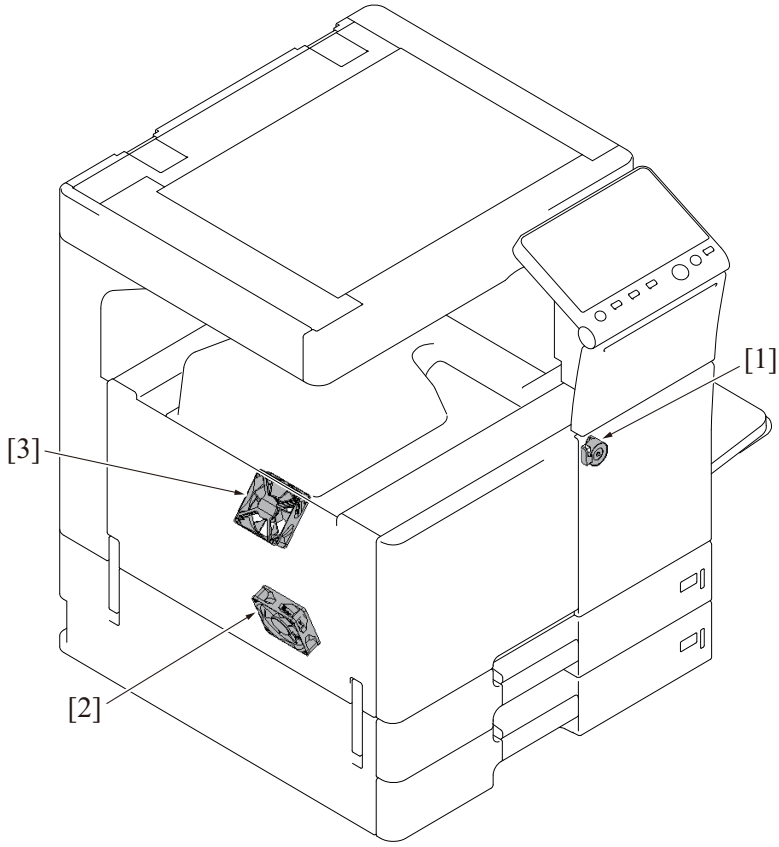


| | | | |
|---|---|---|---|
| [1] | Toner supply motor/K (M6) | [2] | Power supply cooling fan (FM1) |
| [3] | Transfer belt cleaner cooling fan (FM2) | - | - |

### 1.1.3 Back side

#### (1) Board

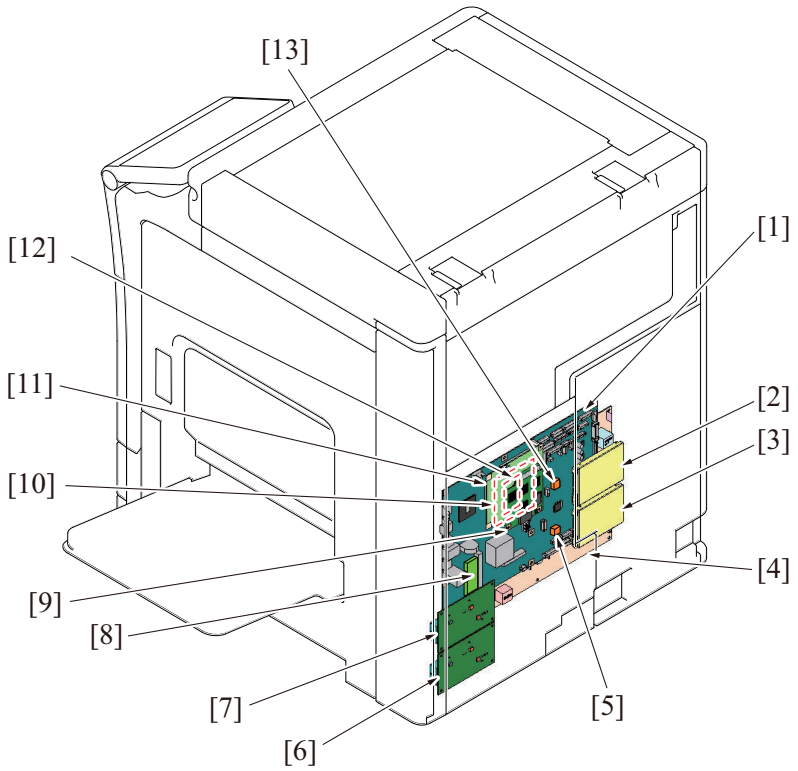


| | | | |
|---|---|---|---|
| [1] | MFP board (MFPB) | [2] | Hard disk (A) (HDD (A)) |
| [3] | Hard disk (B) (HDD (B)) * | [4] | High voltage unit (HV) |
| [5] | EEPROM/2 | [6] | Fax board/1 (FAXB/1) |
| [7] | Fax board/2 (FAXB/2) * | [8] | Memory board (MEMB) * |
| [9] | DSC board/2 (DSCB/2) * | [10] | DSC board/1 (DSCB/1) * |
| [11] | Dual scan image processing board (DSIPB) * | [12] | eMMC board (eMMC) |
| [13] | EEPROM/1 | - | - |

*: Option

**(2) Switch/sensor/others**

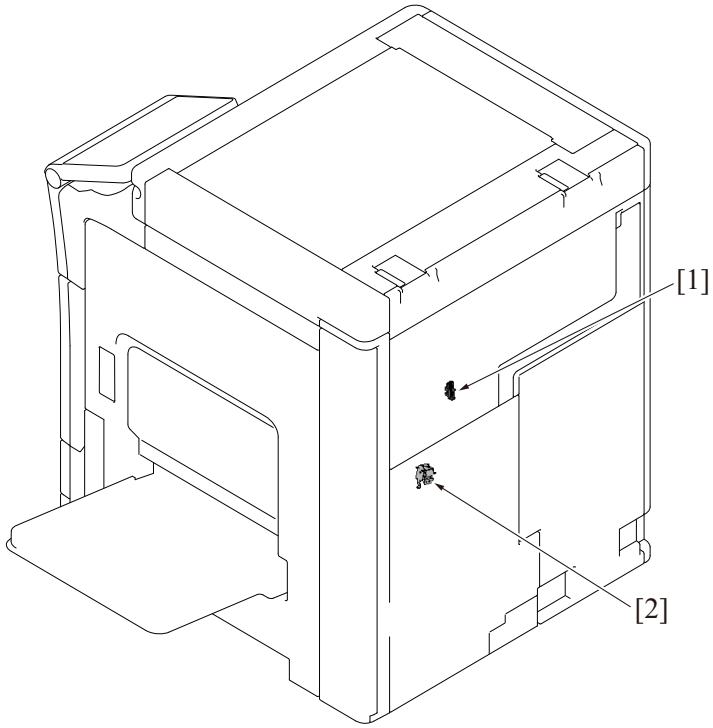


| | | | |
|---|---|---|---|
| [1] | 1st transfer pressure sensor (PS39) | [2] | Developing solenoid (SD4) |

**(3) Load**

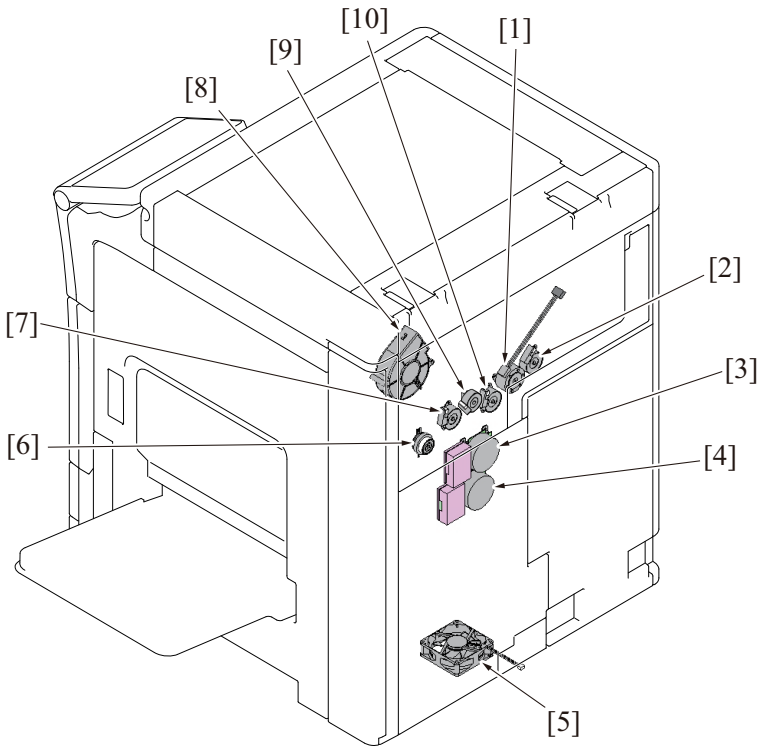

| | | | |
|---|---|---|---|
| [1] | Toner cartridge motor/Y,M,C (M10) | [2] | Toner supply motor/Y (M9) |
| [3] | PC motor (M2) | [4] | Developing motor (M21) |
| [5] | Rear side cooling fan (FM3) | [6] | 1st transfer pressure clutch (CL5) |
| [7] | Toner supply motor/C (M7) | [8] | Paper cooling fan (FM8) |
| [9] | Toner cartridge motor/K (M25) | [10] | Toner supply motor/M (M8) |

### 1.1.4 Left side

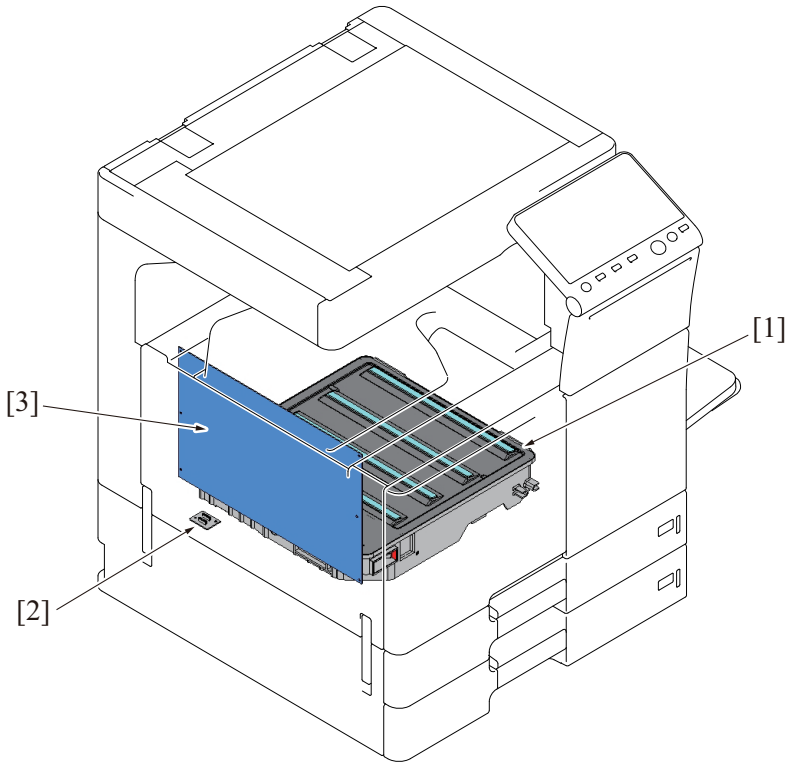


| | | | |
|---|---|---|---|
| [1] | PH unit | [2] | PH relay board (PHRYB) |
| [3] | DC power supply (DCPU) | - | - |

### 1.1.5 Right side

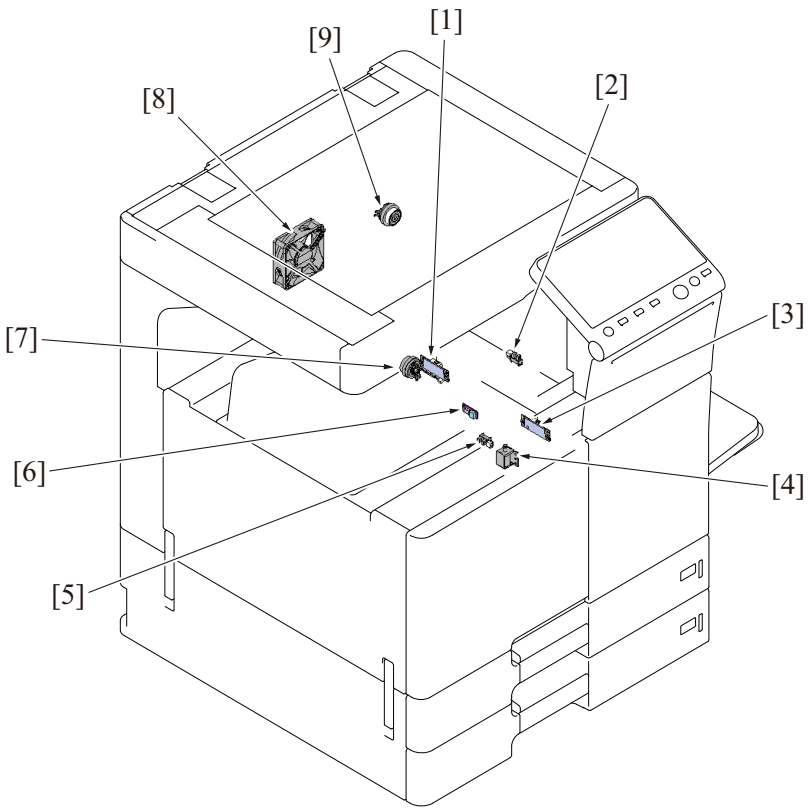


| | | | |
|---|---|---|---|
| [1] | IDC sensor/Rr (IDCS/Rr) | [2] | Fusing loop sensor (PS2) |
| [3] | IDC sensor/Fr (IDCS/Fr) | [4] | IDC sensor shutter solenoid (SD2) |
| [5] | Registration sensor (PS1) | [6] | Temperature/humidity sensor (TEM/HUMS) |
| [7] | Registration clutch (CL4) | [8] | Toner cartridge cooling fan (FM4) |
| [9] | Paper exit clutch (CL8) | - | - |

### 1.1.6 Manual bypass tray

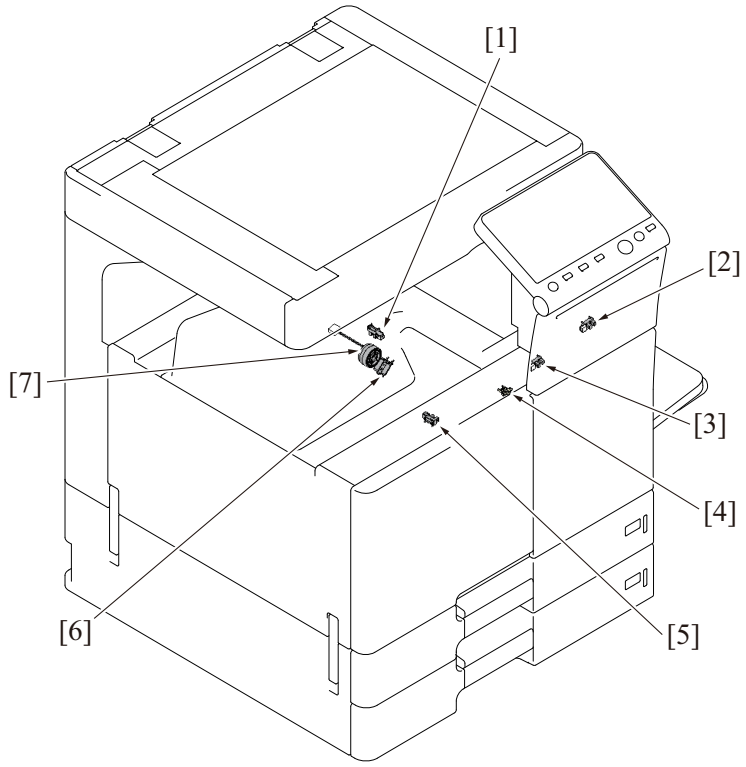


| | | | |
|---|---|---|---|
| [1] | Bypass lift-up position sensor (PS26) | [2] | Bypass FD paper size sensor/2 (PS29) |
| [3] | Bypass FD paper size sensor/1 (PS28) | [4] | Bypass CD paper size VR (VR1) |
| [5] | Bypass paper empty sensor (PS27) | [6] | Bypass pick-up solenoid (SD1) |
| [7] | Bypass paper feed clutch (CL7) | - | - |

### 1.1.7 Tray 1

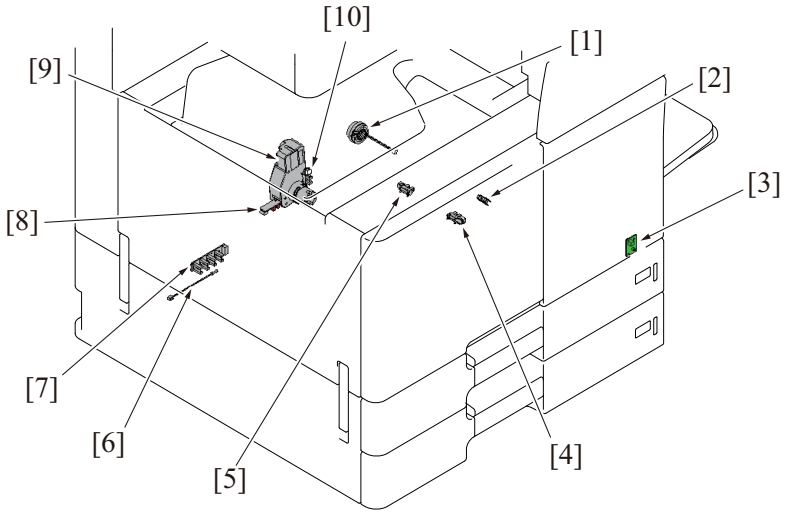


| | | | |
|---|---|---|---|
| [1] | Tray 1 paper feed clutch (CL3) | [2] | Tray 1 paper feed sensor (PS23) |
| [3] | Tray 1 empty indicator board (PEIB/1) | [4] | Tray 1 paper empty sensor (PS24) |
| [5] | Tray 1 upper limit sensor (PS25) | [6] | Paper temperature sensor (TH4) |
| [7] | Tray 1 FD paper size board (FDPSB/1) | [8] | Tray 1 CD paper size board (CDPSB/1) |
| [9] | Tray 1 lift-up motor (M12) | [10] | Tray 1 paper near empty sensor (PS11) |

### 1.1.8 Tray 2

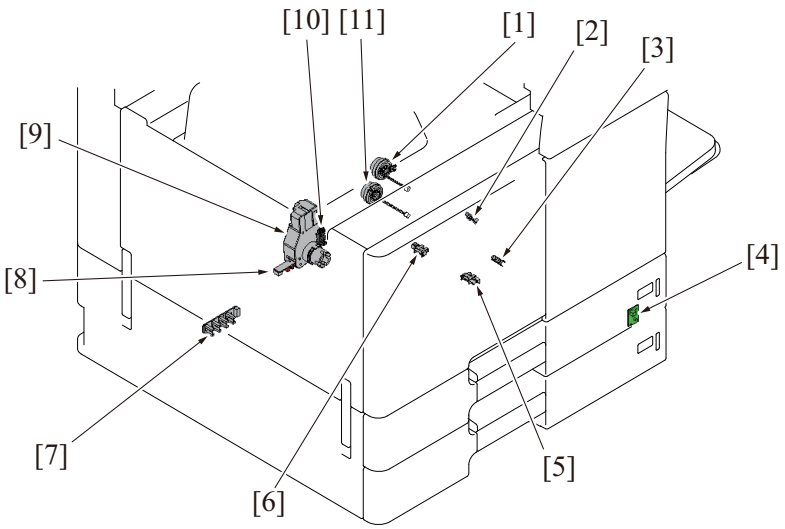


| | | | |
|---|---|---|---|
| [1] | Tray 2 vertical transport clutch (CL2) | [2] | Tray 2 vertical transport sensor (PS19) |
| [3] | Tray 2 paper feed sensor (PS20) | [4] | Tray 2 empty indicator board (PEIB/2) |
| [5] | Tray 2 paper empty sensor (PS21) | [6] | Tray 2 upper limit sensor (PS22) |
| [7] | Tray 2 FD paper size board (FDPSB/2) | [8] | Tray 2 CD paper size board (CDPSB/2) |
| [9] | Tray 2 lift-up motor (M13) | [10] | Tray 2 paper near empty sensor (PS12) |
| [11] | Tray 2 paper feed clutch (CL1) | - | - |

### 1.1.9 Fusing/paper exit section

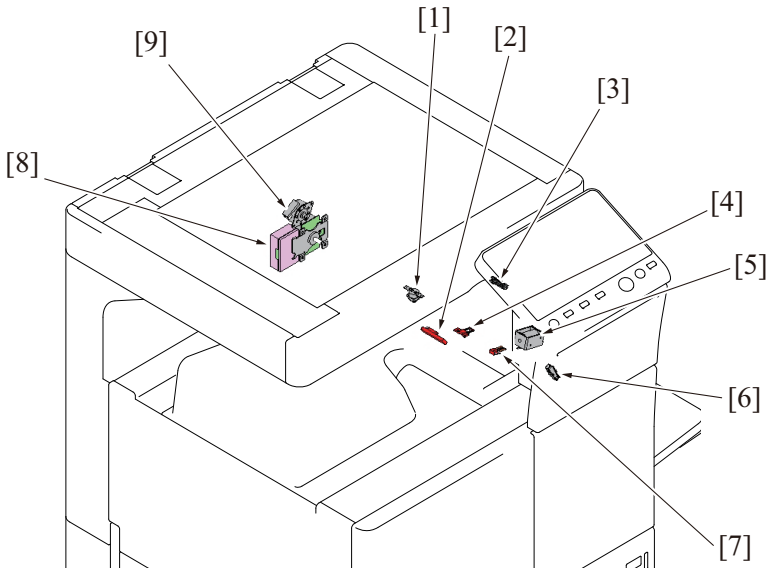


| | | | |
|---|---|---|---|
| [1] | Heating roller thermostat (TS1) | [2] | Heating roller temperature sensor (TEMS) |
| [3] | Paper exit sensor (PS3) | [4] | Heating roller thermistor/2 (TH2) |
| [5] | Gate switch solenoid (SD3) | [6] | Fusing pressure home sensor (PS38) |
| [7] | Heating roller thermistor/1 (TH1) | [8] | Fusing motor (M3) |
| [9] | Fusing pressure motor (M11) | - | - |

### 1.1.10 Duplex section

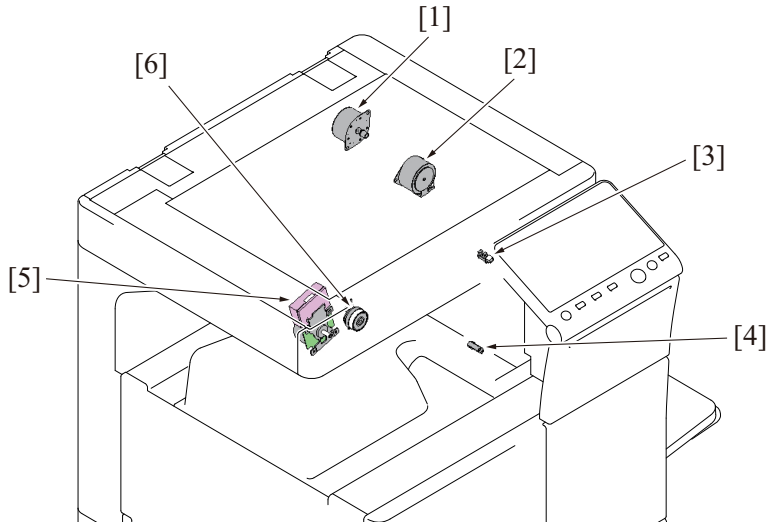


| | | | |
|---|---|---|---|
| [1] | Reverse motor (M4) | [2] | ADU transport motor (M5) |
| [3] | ADU paper passage sensor/1 (PS40) | [4] | ADU paper passage sensor/2 (PS41) |
| [5] | Transport motor (M1) | [6] | ADU transport clutch (CL6) |

## 1.2 DF-704/SP-501 (Option)

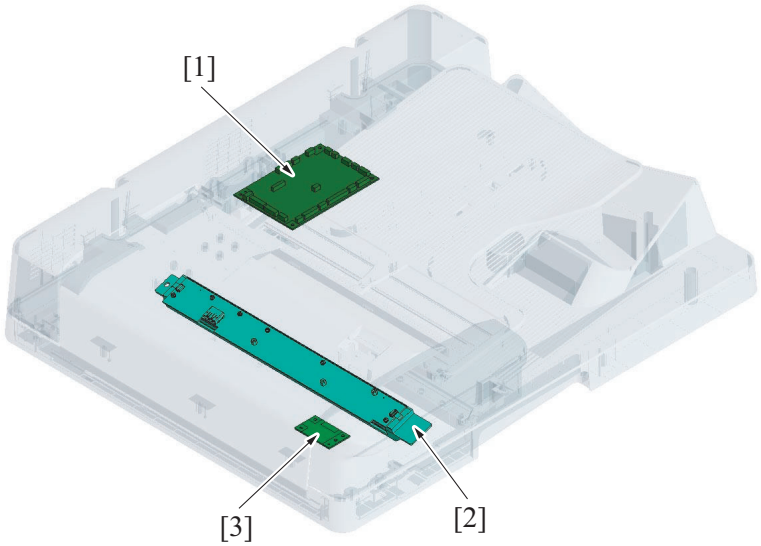


| | | | |
|---|---|---|---|
| [1] | DF control board (DFCB) | [2] | CIS module (CIS) |
| [3] | CIS power supply (CISPU) | - | - |

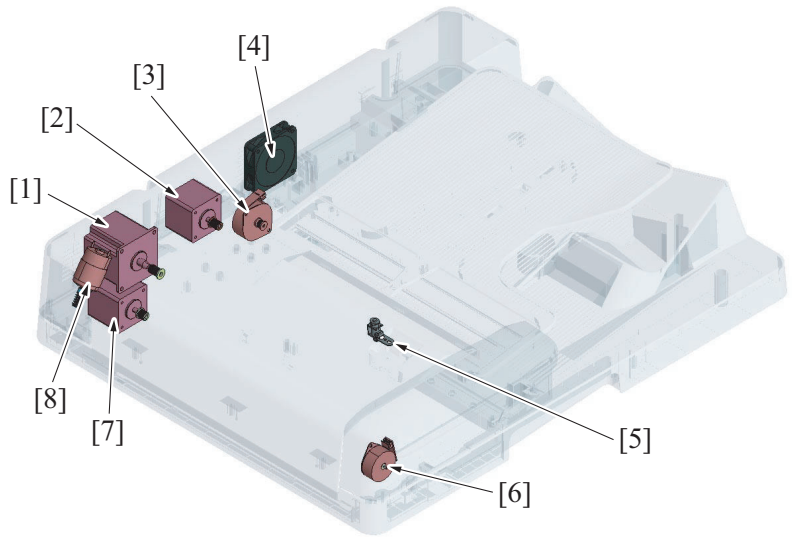


| | | | |
|---|---|---|---|
| [1] | Original reading motor (M1) | [2] | Original feed motor (M2) |
| [3] | CIS cleaning motor (M5) | [4] | DF cooling fan motor (FM1) |
| [5] | Stamp solenoid (SD1) * | [6] | Document reading glass cleaning motor (M6) |
| [7] | Registration motor (M3) | [8] | Reading roller release motor (M4) |

- * : Option

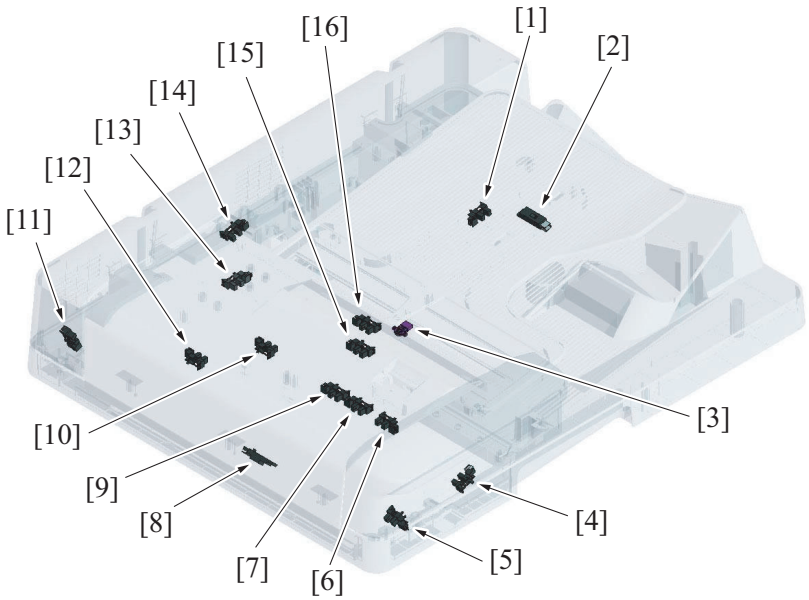


| | | | |
|---|---|---|---|
| [1] | Document length sensor/1 (PS8) | [2] | Document length sensor/2 (PS9) |
| [3] | Original width size sensor (VR1) | [4] | CIS cover sensor (PS15) |
| [5] | Document reading glass cleaning sensor (PS13) | [6] | Mixed original sensor/3 (PS12) |
| [7] | Mixed original sensor/2 (PS11) | [8] | Document reading sensor (PS6) |
| [9] | Mixed original sensor/1 (PS10) | [10] | After Separate sensor (PS2) |
| [11] | Reading roll position sensor (PS4) | [12] | Original registration sensor (PS3) |
| [13] | CIS cleaning sensor (PS7) | [14] | Upper door sensor (PS14) |
| [15] | Original exit sensor (PS5) | [16] | Original empty sensor (PS1) |

## 1.3 DF-629/SP-501 (option)

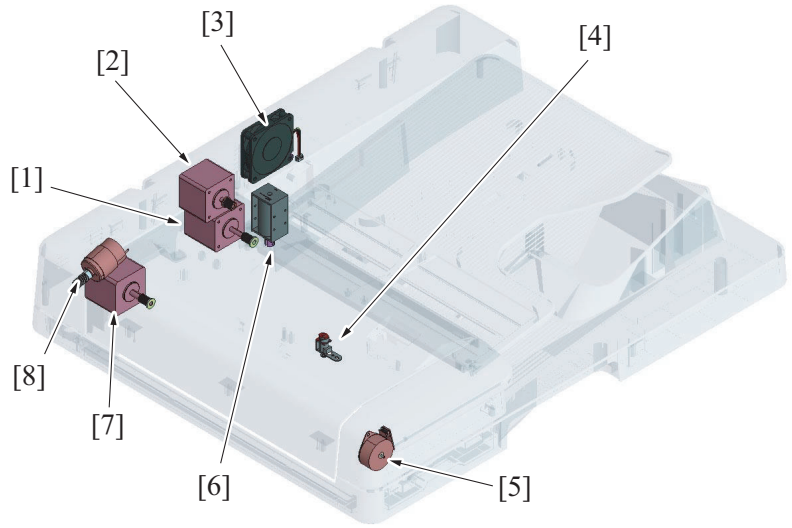


| | | | |
|---|---|---|---|
| [1] | Registration motor (M3) | [2] | Original feed motor (M2) |
| [3] | DF cooling fan motor (FM1) | [4] | Stamp solenoid (SD2) * |
| [5] | Glass cleaning motor (M4) | [6] | Original exit roller release solenoid (SD1) |
| [7] | Original reading motor (M1) | [8] | Reading roll release motor (M5) |

- * : Option

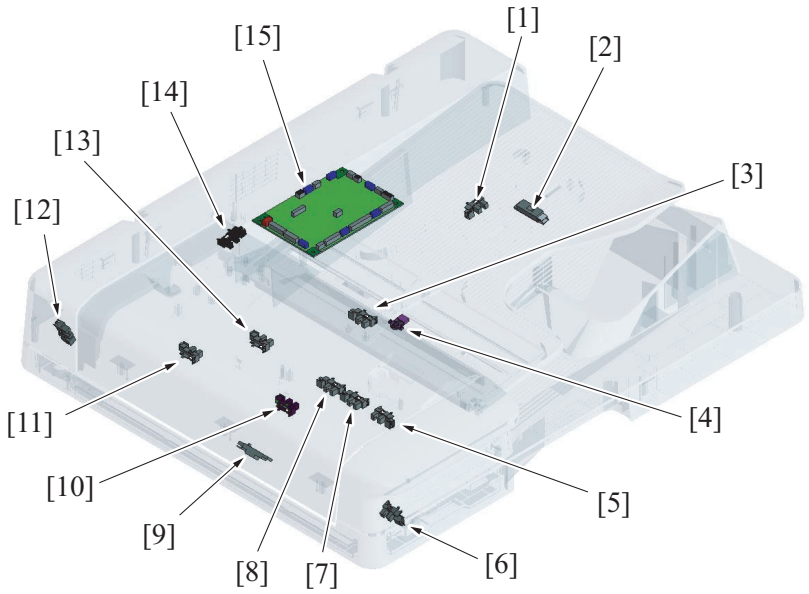


| | | | |
|---|---|---|---|
| [1] | Original length size sensor/1 (PS6) | [2] | Original length size sensor/2 (PS7) |
| [3] | Original empty sensor (PS1) | [4] | Original width sensor (VR1) |
| [5] | Mixed original sensor/3 (PS10) | [6] | Original reading glass cleaning sensor (PS12) |
| [7] | Mixed original sensor/2 (PS9) | [8] | Mixed original sensor/1 (PS8) |
| [9] | Original reading sensor (PS4) | [10] | Original exit sensor (PS5) |
| [11] | Original registration sensor (PS3) | [12] | Reading roll position sensor (PS11) |
| [13] | After Separate sensor (PS2) | [14] | Upper door sensor (PS13) |
| [15] | DF control board (DFCB) | - | - |

## 1.4 PC-110/PC-210 (Option)

### 1.4.1 Board/switch/sensor/others

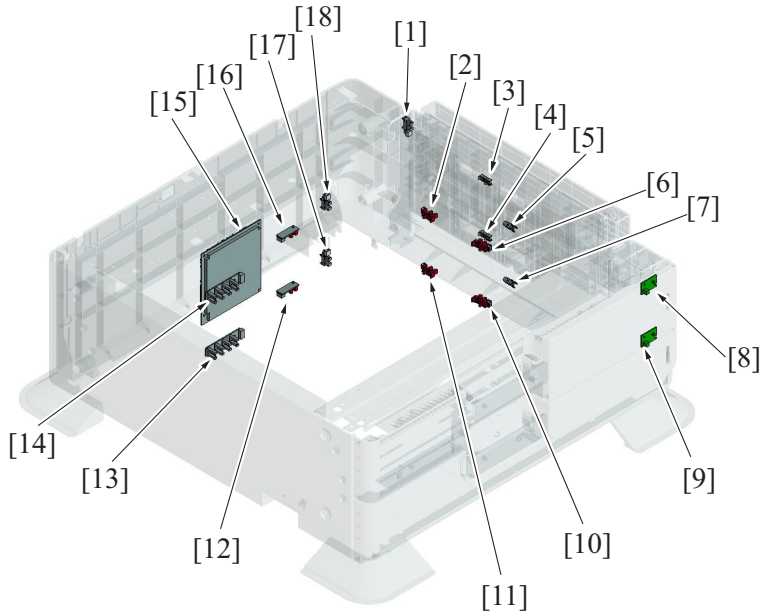


| | | | |
|---|---|---|---|
| [1] | Right bottom door sensor (PS111) | [2] | Tray 3 upper limit sensor (PS116) |
| [3] | Tray 3 vertical transport sensor (PS113) | [4] | Tray 4 vertical transport sensor (PS123) |
| [5] | Tray 3 paper feed sensor (PS112) | [6] | Tray 3 paper empty sensor (PS114) |
| [7] | Tray 4 paper feed sensor (PS122) | [8] | Tray 3 paper empty indicator board (PEIB/3) |
| [9] | Tray 4 paper empty indicator board (PEIB/4) | [10] | Tray 4 paper empty sensor (PS124) |
| [11] | Tray 4 upper limit sensor (PS126) | [12] | Tray 4 CD paper size board (CDPSB/4) |
| [13] | Tray 4 FD paper size board (FDPSB/4) | [14] | Tray 3 FD paper size board (FDPSB/3) |
| [15] | PC control board (PCCB) | [16] | Tray 3 CD paper size board (CDPSB/3) |
| [17] | Tray 4 paper near empty sensor (PS125) | [18] | Tray 3 paper near empty sensor (PS115) |

### 1.4.2 Load

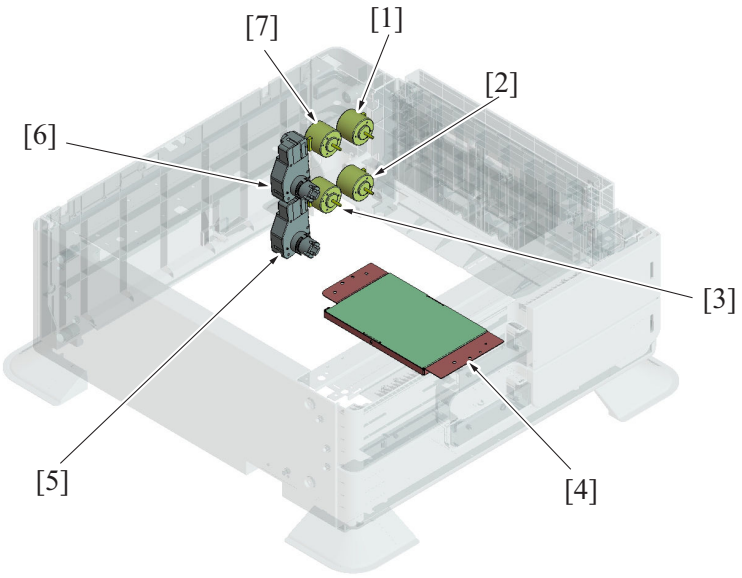


| | | | |
|---|---|---|---|
| [1] | Tray 3 vertical transport motor (M112) | [2] | Tray 4 vertical transport motor (M122) |
| [3] | Tray 4 paper feed motor (M121) | [4] | PC dehumidifier heater (DH111) |
| [5] | Tray 4 lift-up motor (M123) | [6] | Tray 3 lift-up motor (M113) |
| [7] | Tray 3 paper feed motor (M111) | - | - |

## 1.5 PC-410 (Option)

### 1.5.1 Board/switch/sensor/others

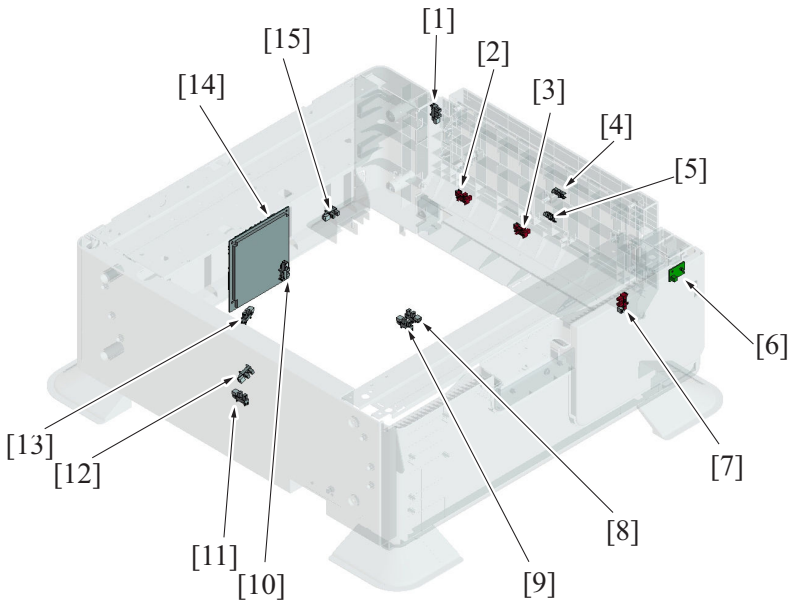


| | | | |
|---|---|---|---|
| [1] | Right bottom door sensor (PS131) | [2] | Main tray upper limit sensor (PS136) |
| [3] | Main tray upper paper empty sensor (PS137) | [4] | Vertical transport sensor (PS133) |
| [5] | Paper feed sensor (PS132) | [6] | Tray 3 paper empty indicator board (PEIB/3) |
| [7] | Cassette set sensor (PS143) | [8] | Main tray paper empty sensor (PS134) |
| [9] | Shifter stop/lower limit position sensor (PS138) | [10] | Division board sensor (PS142) |
| [11] | Shifter home sensor (PS139) | [12] | Sub tray paper empty sensor (PS140) |
| [13] | Sub tray paper remaining amount sensor (PS141) | [14] | PC control board (PCCB) |
| [15] | Main tray paper near empty sensor (PS135) | - | - |

### 1.5.2 Load

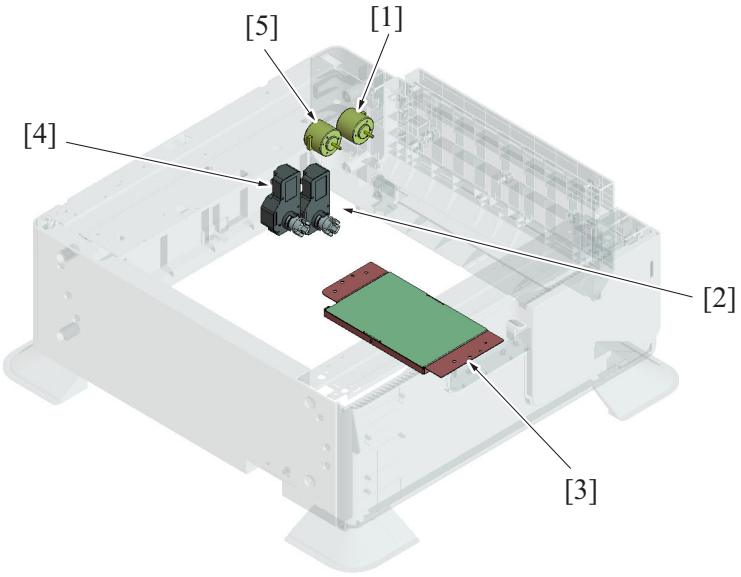


| | | | |
|---|---|---|---|
| [1] | Vertical transport motor (M132) | [2] | Elevator motor (M134) |
| [3] | PC dehumidifier heater (DH111) | [4] | Shifter motor (M133) |
| [5] | Paper feed motor (M131) | - | - |

## 1.6 LU-302 (Option)

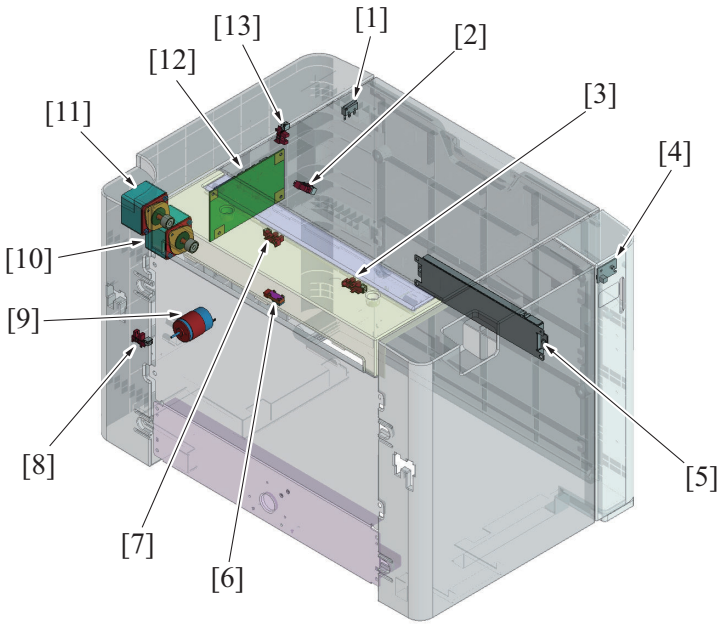


| | | | |
|---|---|---|---|
| [1] | LU door switch (MS1) | [2] | Near empty sensor /2 (PS6) |
| [3] | Paper empty sensor (PS4) | [4] | Tray LED (LED) |
| [5] | Dehumidification heater (DH) | [6] | Paper feed sensor (PS3) |
| [7] | Upper limit sensor (PS2) | [8] | Tray set sensor (PS1) |
| [9] | Lift-up motor (M1) | [10] | Paper feed motor (M2) |
| [11] | Transport motor (M3) | [12] | LU drive board (LUDB) |
| [13] | Near empty sensor /1 (PS5) | - | - |

## 1.7 JS-506 (Option)

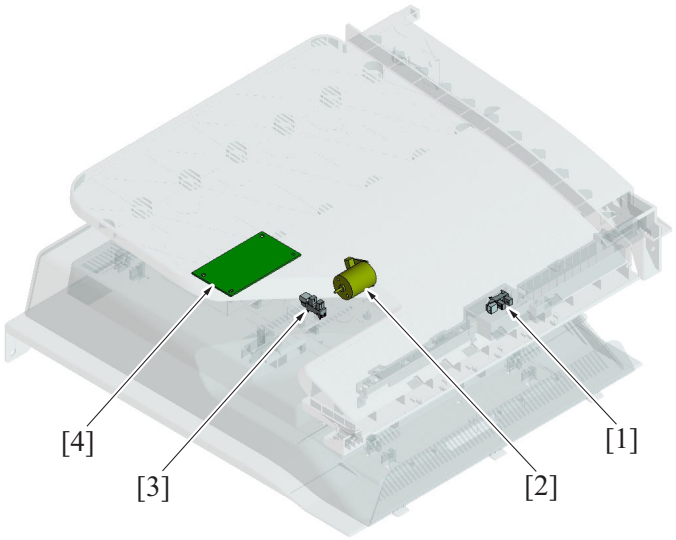


| | | | |
|---|---|---|---|
| [1] | Exit tray1 full sensor (PS2) | [2] | Tray shift motor (M1) |
| [3] | Tray shift home sensor (PS1) | [4] | JS control board (JSCB) |

## 1.8 FS-534 (Option)

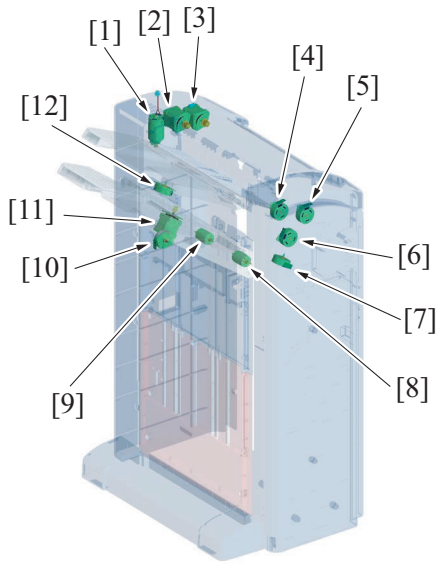


| | | | |
|---|---|---|---|
| [1] | Main tray up/down motor (M11) | [2] | FNS discharge motor (M3) |
| [3] | FNS entry transport motor (M2) | [4] | FNS paddle motor (M5) |
| [5] | Receiving roller retraction motor (M4) | [6] | Trailing edge stopper motor (M6) |
| [7] | Alignment motor/Front (M7) | [8] | Bundle eject motor (M10) |
| [9] | Pre-eject drive motor (M9) | [10] | Paper receiving control motor (M12) |
| [11] | Side stapler movement motor (M13) | [12] | Alignment motor/Rear (M8) |

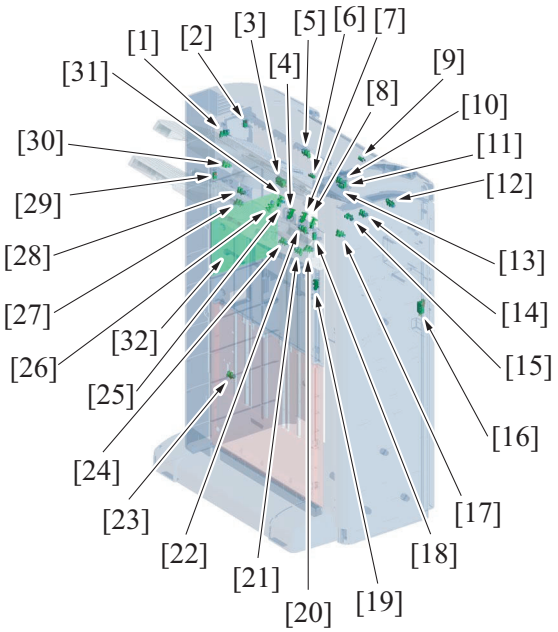


| | | | |
|---|---|---|---|
| [1] | Stacker motor sensor (PS25) | [2] | Sub tray full detection sensor/out (PS9) |
| [3] | Main tray upper position detect switch (SW2) | [4] | Pre-eject away sensor (PS22) |
| [5] | Sub tray exit sensor (PS8) | [6] | Staple stacker paper detection sensor (PS31) |
| [7] | Pre-eject home sensor (PS21) | [8] | Trailing edge stopper home position detection sensor (PS20) |
| [9] | FNS entrance sensor (PS4) | [10] | Upper cover open/close detection sensor (PS32) |
| [11] | Sub tray full detection sensor/in (PS10) | [12] | Exchange folded paper output sensor (PS30) |
| [13] | Saddle exit sensor (PS5) | [14] | Receiving roller retraction sensor (PS11) |
| [15] | Upper paddle home position detection sensor (PS14) | [16] | Front door open detect switch (SW1) |
| [17] | Alignment plate/F home sensor (PS12) | [18] | Main tray upper sensor/in (PS7) |
| [19] | Paper delivery control sensor (PS28) | [20] | Stapler position sensor (Center) (PS24) |
| [21] | Gripper motor sensor (PS17) | [22] | Main tray upper position sensor/F (PS27) |
| [23] | Main tray full detection sensor (PS29) | [24] | Pre-eject encorder sensor (PS15) |

| | | | |
|---|---|---|---|
| [25] | Main tray exit sensor (PS16) | [26] | Gripper home position sensor (PS18) |
| [27] | Stapler home position sensor (Rear) (PS23) | [28] | Main tray upper position sensor/R (PS26) |
| [29] | Main tray upper sensor/out (PS6) | [30] | Alignment plate/R home sensor (PS13) |
| [31] | Gripper position detection sensor (PS19) | [32] | FS control board (FSCB) |

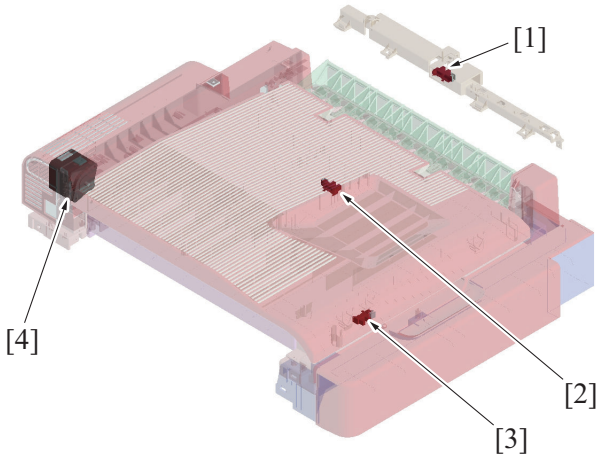


| | | | |
|---|---|---|---|
| [1] | 3rd exit tray full sensor (PS1) | [2] | RU entrance sensor (PS2) |
| [3] | RU cover open/close detection sensor (PS3) | [4] | RU transport motor (M1) |

## 1.9 PK-520 (Option)

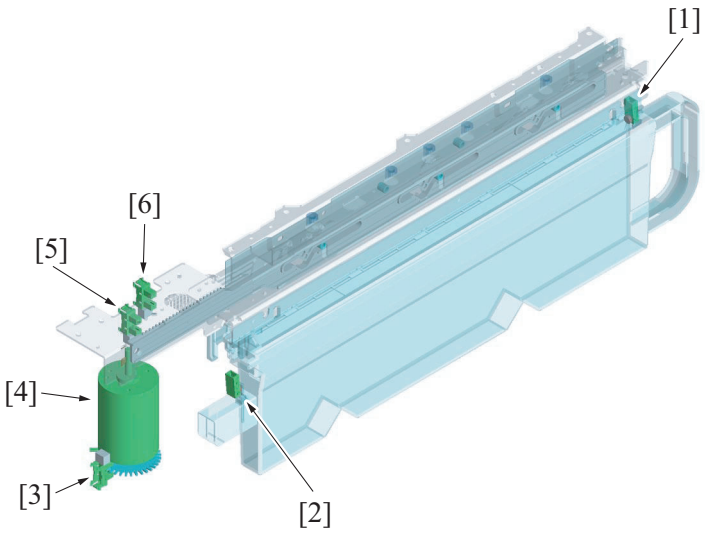


| | | | |
|---|---|---|---|
| [1] | Punch dust full sensor/out (PS4) | [2] | Punch dust full sensor/in (PS5) |
| [3] | Punch motor sensor (PS3) | [4] | Punch drive motor (M1) |
| [5] | Punch position sensor (PS2) | [6] | Punch home sensor (PS1) |

## 1.10 SD-511 (Option)

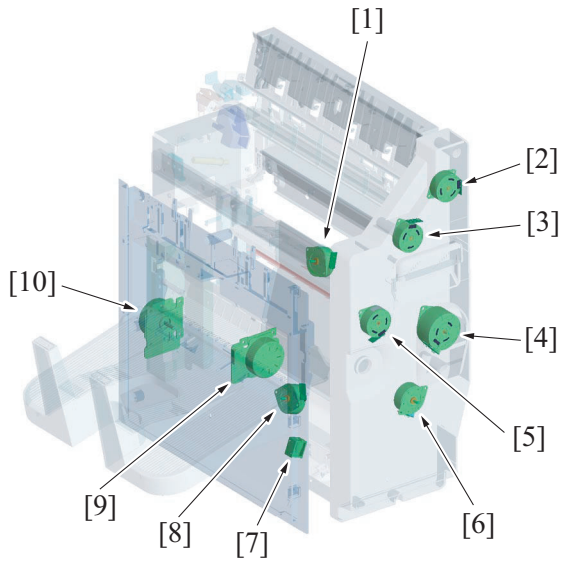


| | | | |
|---|---|---|---|
| [1] | Alignment motor (M3) | [2] | SD transport motor (M1) |
| [3] | Paper discharge control motor (M2) | [4] | Center fold guide motor (M8) |
| [5] | Tri-folding guide motor (M6) | [6] | SD paddle motor (M7) |
| [7] | Stopper solenoid (SD1) | [8] | Stopper drive motor (M4) |
| [9] | Center fold knife motor (M9) | [10] | Center fold roller motor (M5) |

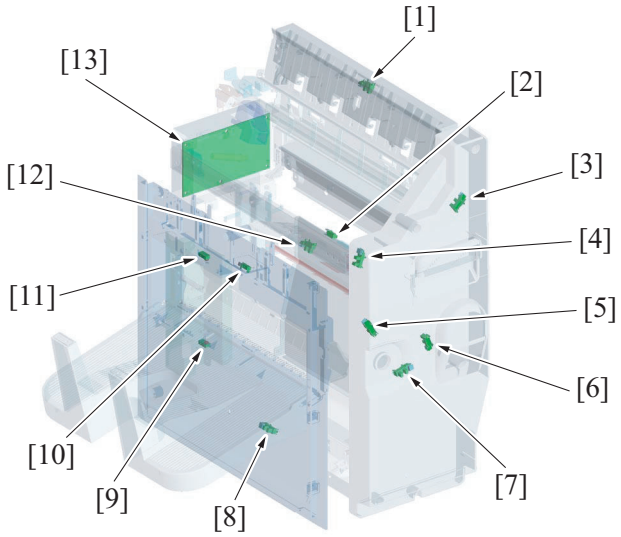


| | | | |
|---|---|---|---|
| [1] | SD entrance sensor (PS1) | [2] | Center staple/fold stacker paper detect sensor (PS3) |
| [3] | Curl cover detection sensor (PS2) | [4] | Alignment home sensor (PS4) |
| [5] | Tri-folding gate home sensor (PS11) | [6] | Guide home sensor (PS7) |
| [7] | Paddle home sensor (PS5) | [8] | Stopper home sensor (PS6) |
| [9] | Booklet tray empty detection sensor/out (PS14) | [10] | Fold exit sensor (PS12) |
| [11] | Booklet tray empty detection sensor/in (PS13) | [12] | Center fold knife home sensor (PS8) |
| [13] | SD drive board (SDDB) | - | - |

## 1.11 FS-533 (Option)

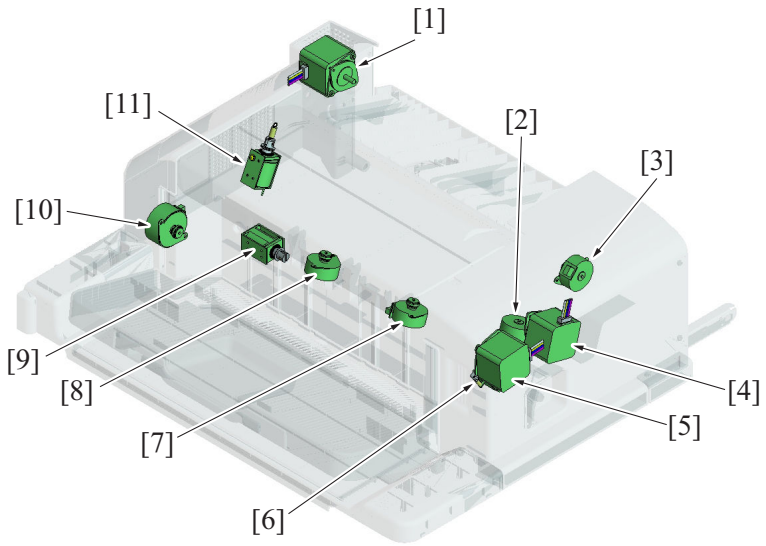


| | | | |
|---|---|---|---|
| [1] | Paper conveyance motor (M101) | [2] | Stapler movement motor (M107) |
| [3] | Alignment roller motor (M103) | [4] | Paper exit motor (M102) |
| [5] | Exit roller lift up motor (M104) | [6] | Paper exit roller solenoid (SD103) |
| [7] | Alignment motor/F (M105) | [8] | Alignment motor/R (M106) |
| [9] | Paper surface detect solenoid (SD101) | [10] | Tray lift up motor (M109) |
| [11] | Batch solenoid (SD102) | | |

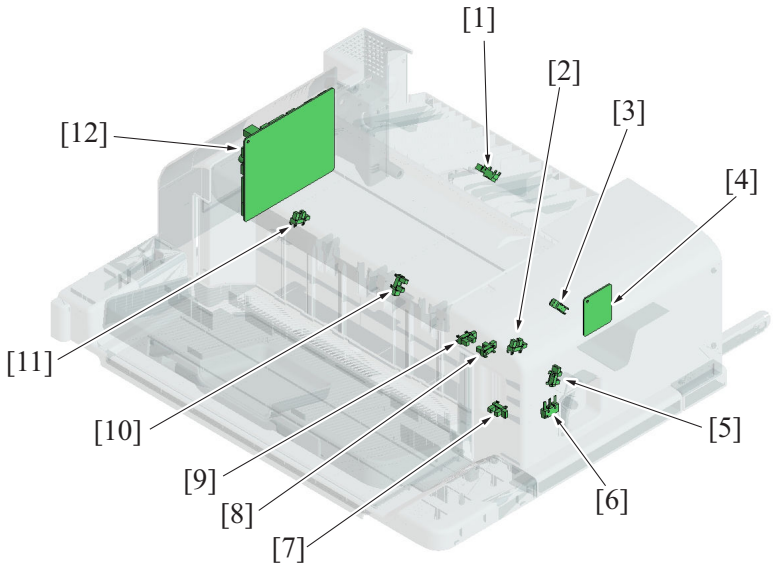


| | | | |
|---|---|---|---|
| [1] | Paper feed sensor (PS101) | [2] | Alignment plate home sensor/F (PS108) |
| [3] | Pick up roller position sensor (PS105) | [4] | Stapler relay board (STREYB) |
| [5] | Stapler home sensor (PS110) | [6] | Finisher lock switch (SW1) |
| [7] | Paper exit tray home sensor (PS107) | [8] | Paper surface detect sensor/2 (PS104) |
| [9] | Paper weight lever sensor (PS103) | [10] | Paper surface detect sensor/1 (PS102) |
| [11] | Alignment plate home sensor/R (PS109) | [12] | FS control board (FSCB) |

## 1.12 PK-519 (Option)

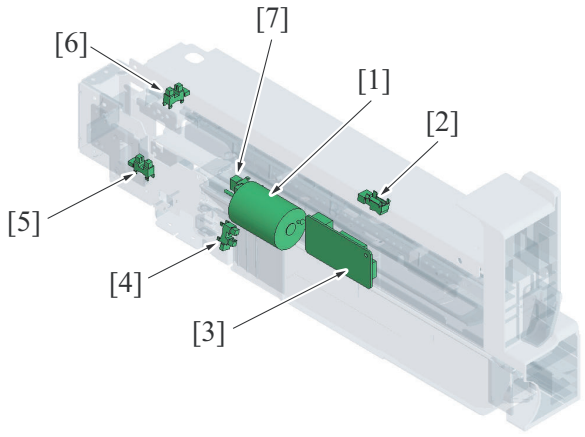


| | | | |
|---|---|---|---|
| [1] | Punch motor (M201) | [2] | Paper feed sensor (PS201) |
| [3] | PK control board (PKCB) | [4] | Punch dust full sensor (PS205) |
| [5] | Puncher drive cam sensor (PS203) | [6] | Puncher home sensor (PS204) |
| [7] | Punch motor sensor (PS202) | - | - |

## 1.13 CU-101 (Option)

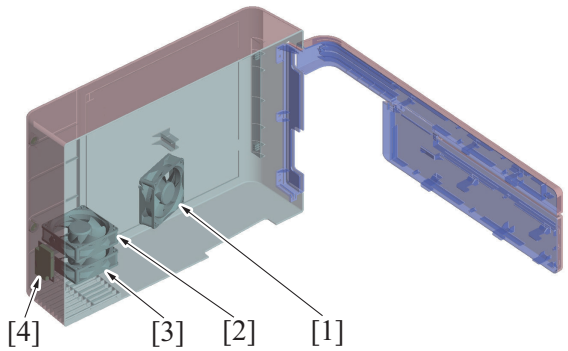


| | | | |
|---|---|---|---|
| [1] | Suction fan (FM16) | [2] | Exhaust fan/1 (FM14) |
| [3] | Exhaust fan/1 (FM15) | [4] | Clean unit drive board (CUDB) |

# 2. CONNECTOR LAYOUT DRAWING

## 2.1 BOARD CONNECTOR LAYOUT DRAWING

### 2.1.1 bizhub C368/C308/C258

#### (1) MFP board (MFPB)

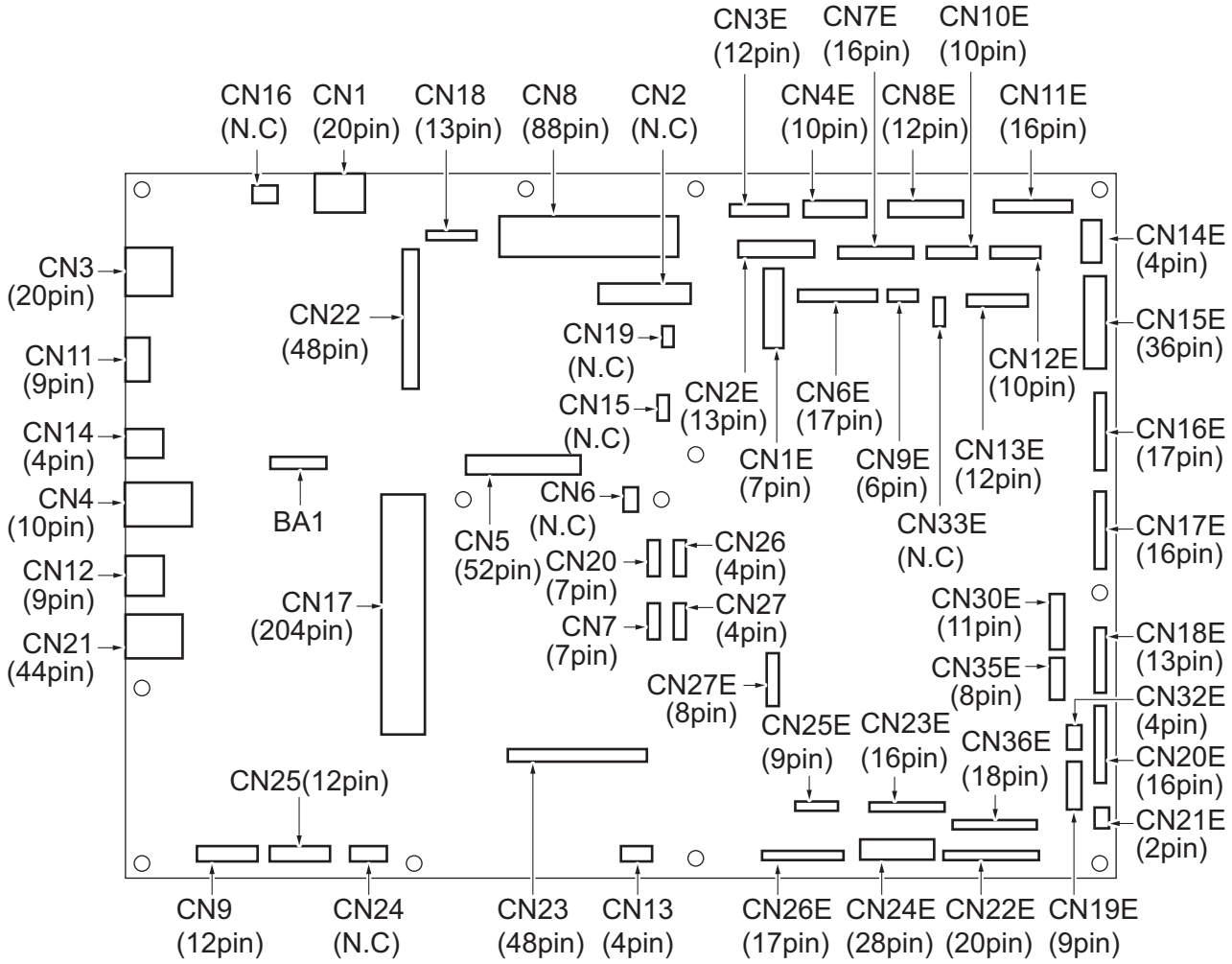


#### (2) Front side board (FRB)

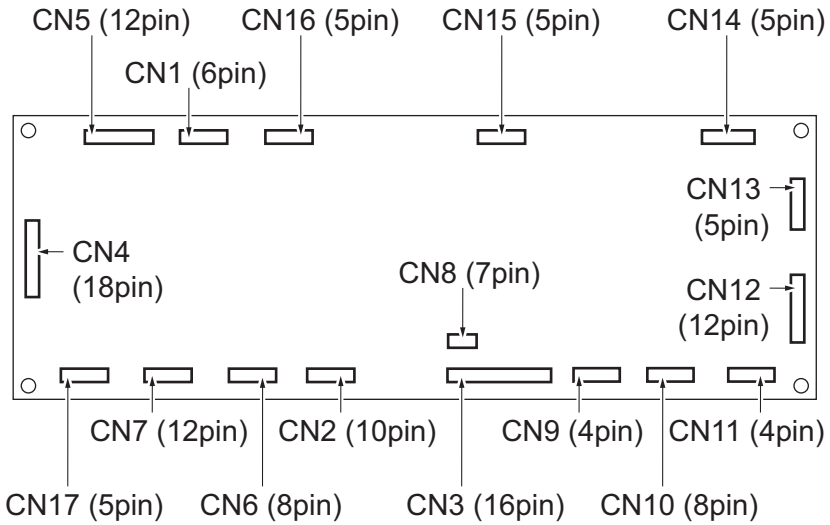

**(3) PH relay board (PHRYB)**

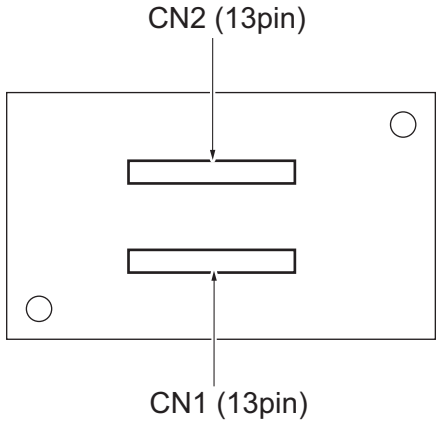


**(4) eMMC board (eMMC)**

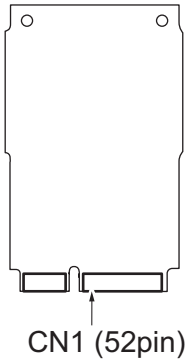


**(5) Scanner drive board (SCDB)**

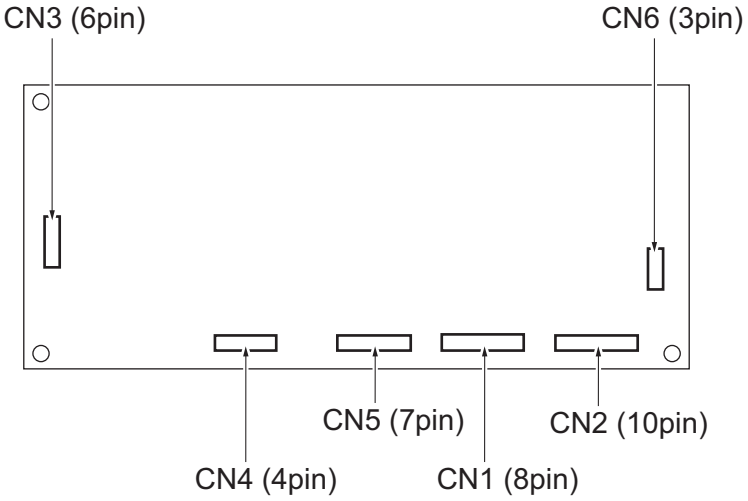

**(6) DC power supply (DCPU)**

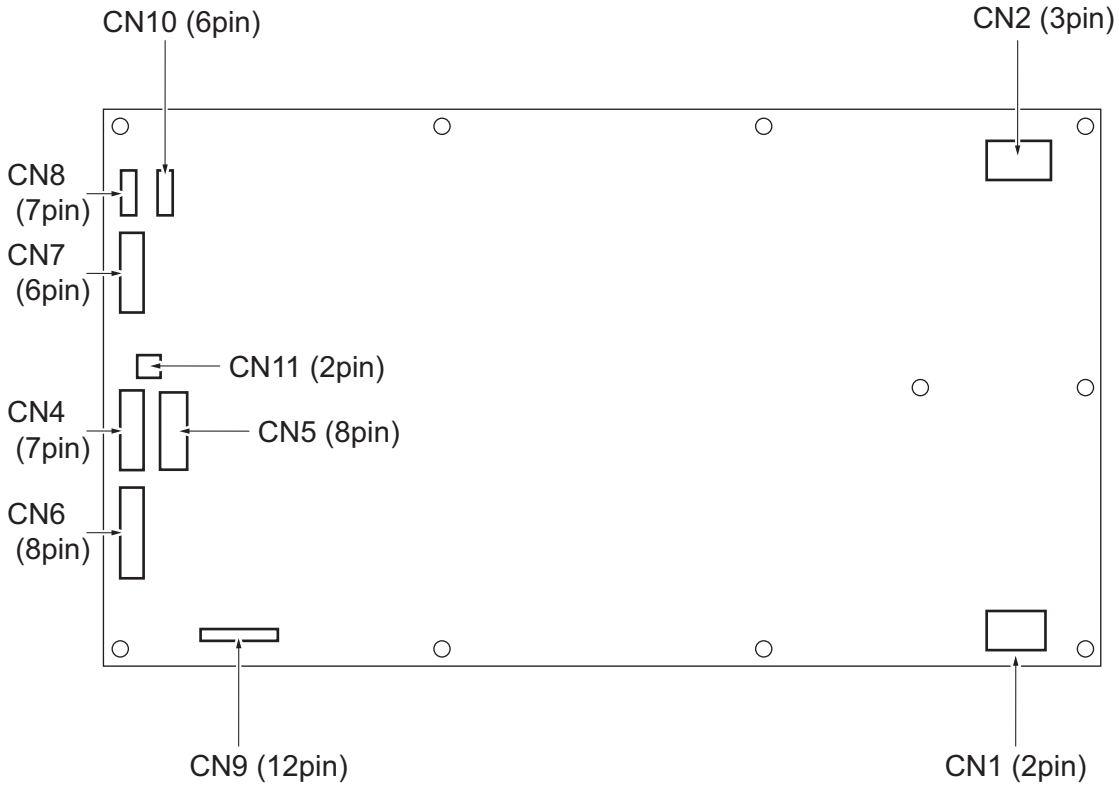


**(7) High voltage unit (HV)**

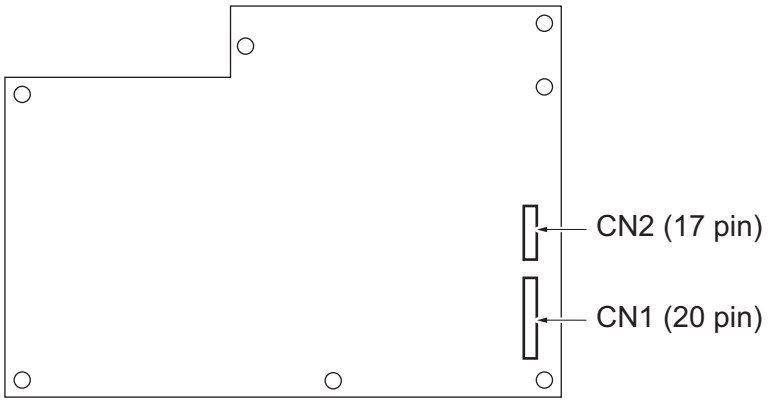

### 2.1.2 DF control board (DFCB)

#### (1) DF-704

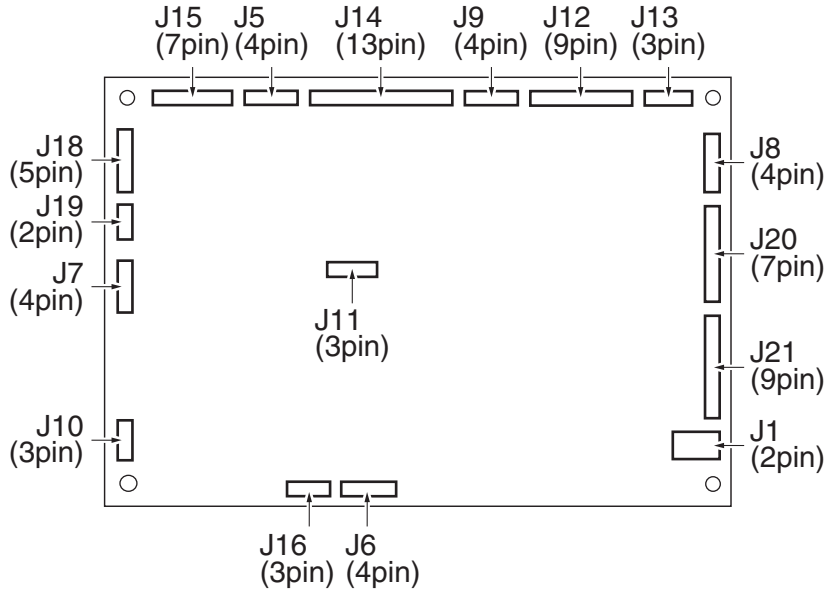


#### (2) DF-629

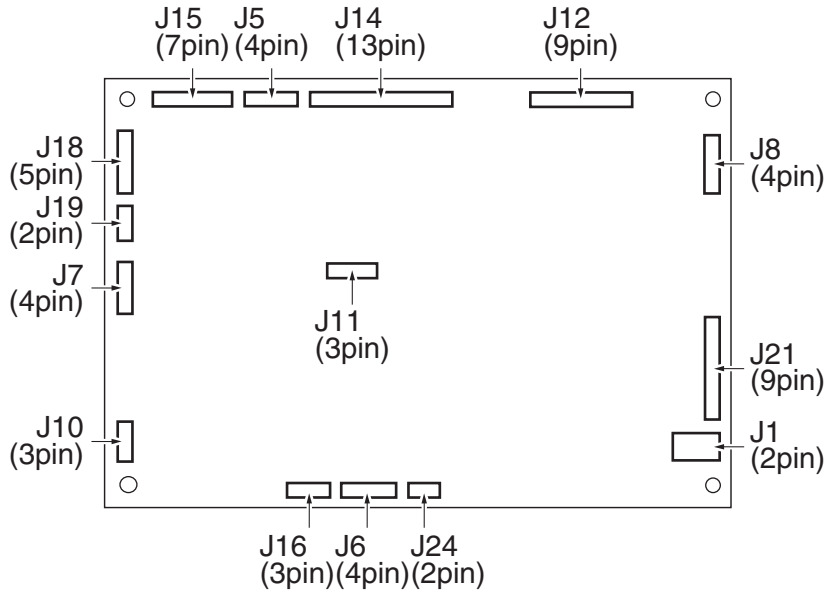

### 2.1.3 Dual scan image processing board (DSIPB)

#### (1) DF-704

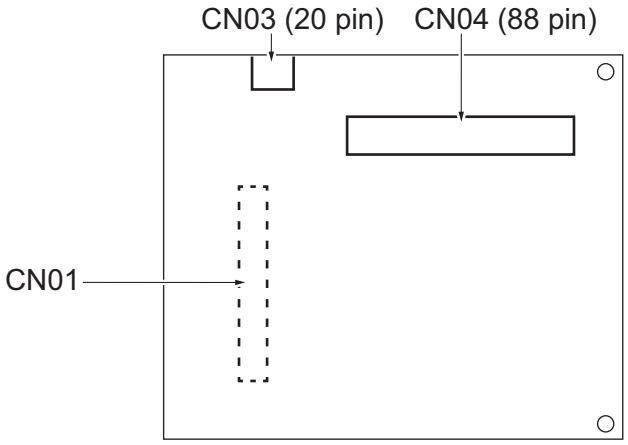


### 2.1.4 CIS power supply (CISPU)

#### (1) DF-704

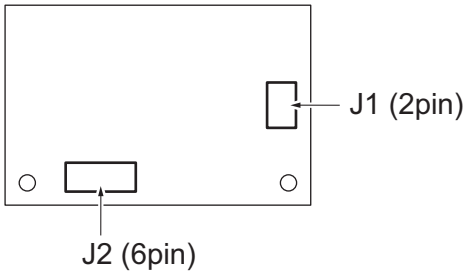

### 2.1.5 PC control board (PCCB)

#### (1) PC-110

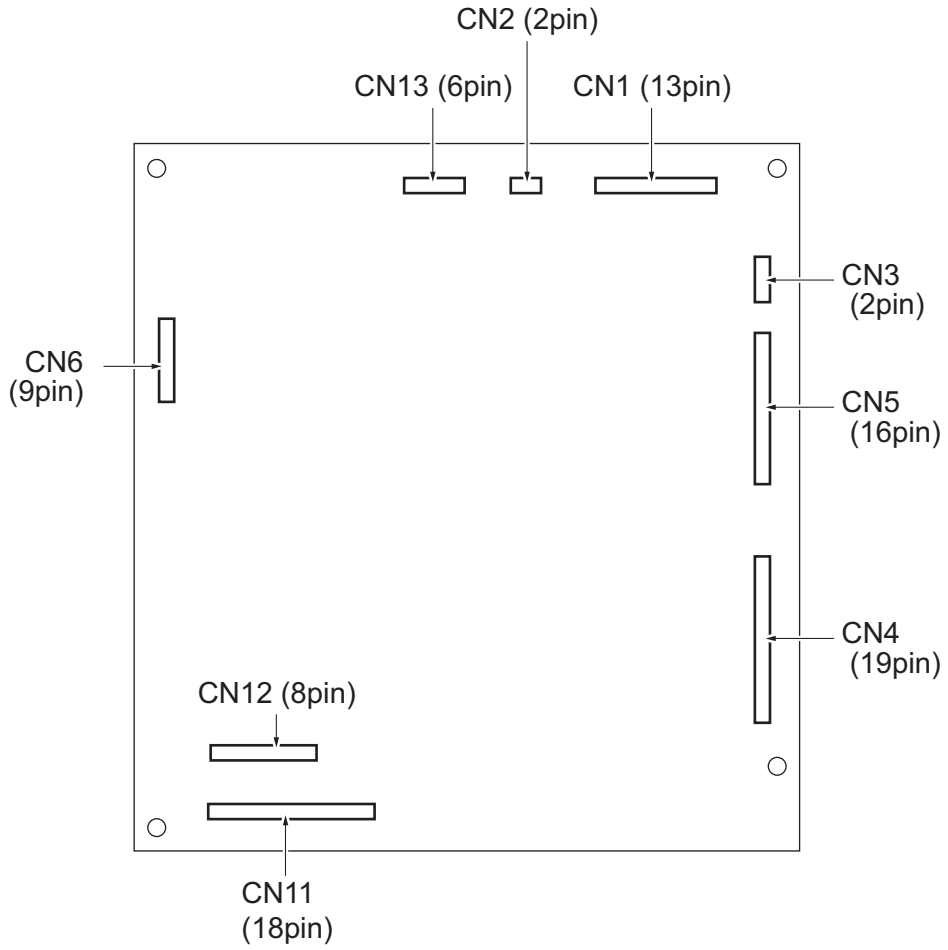

**(2) PC-210**

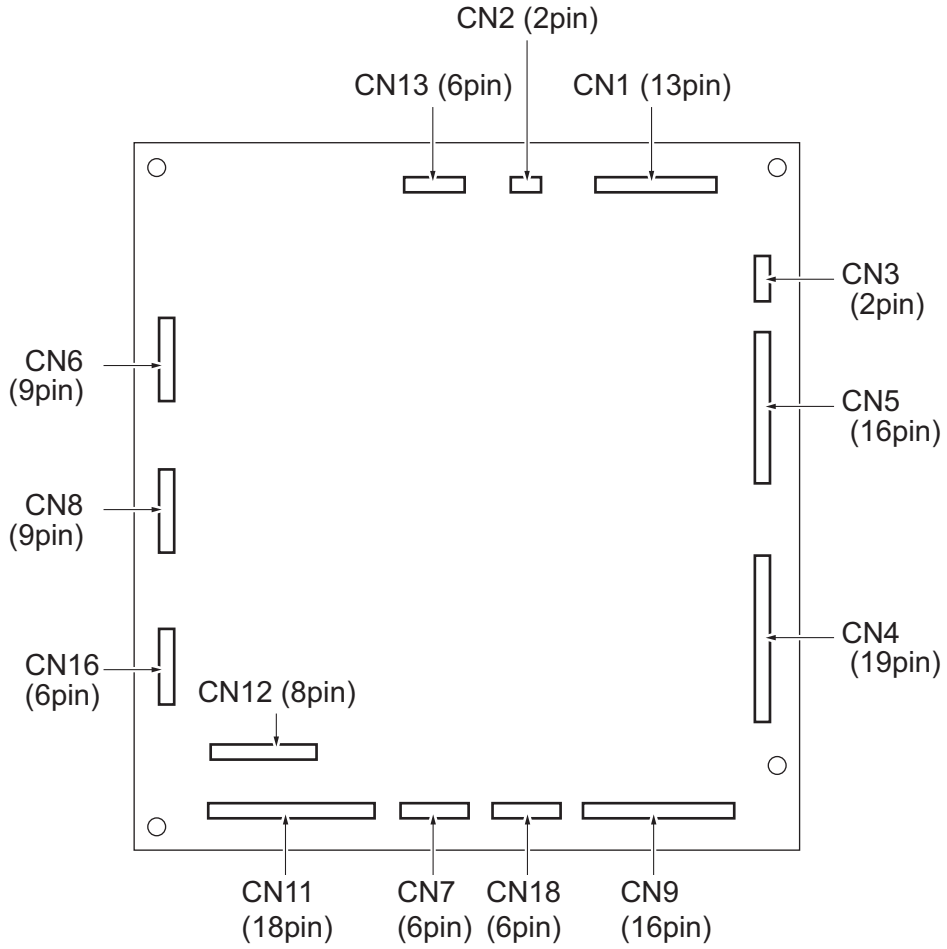
CN2 (2pin)
CN13 (6pin)
CN1 (13pin)
CN3 (2pin)
CN6 (9pin)
CN5 (16pin)
CN8 (9pin)
CN4 (19pin)
CN16 (6pin)
CN12 (8pin)
CN11 (18pin)
CN7 (6pin)
CN18 (6pin)
CN9 (16pin)

**(3) PC-410**

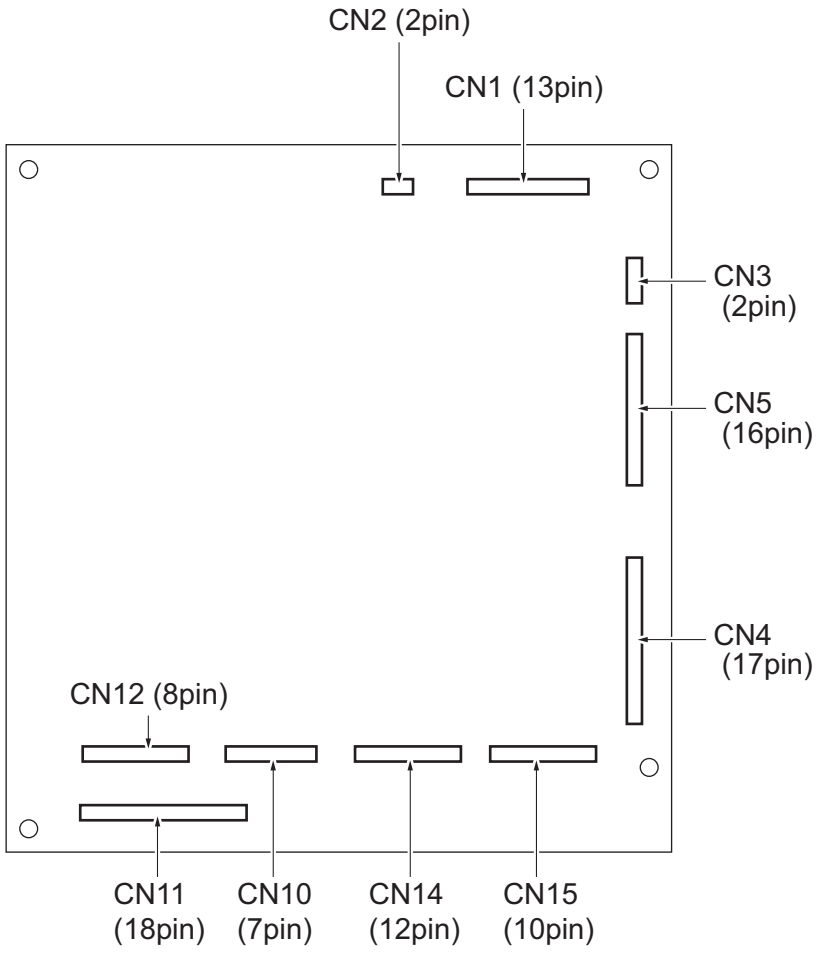


### 2.1.6 LU drive board (LUDB)

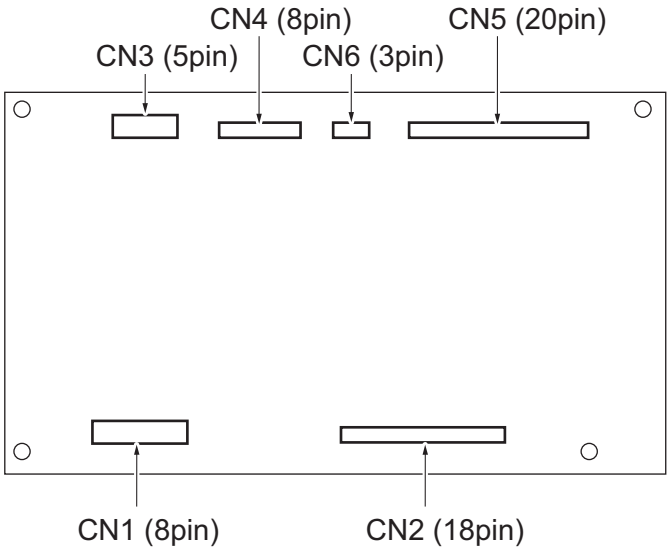

### 2.1.7 JS control board (JSCB)

#### (1) JS-506

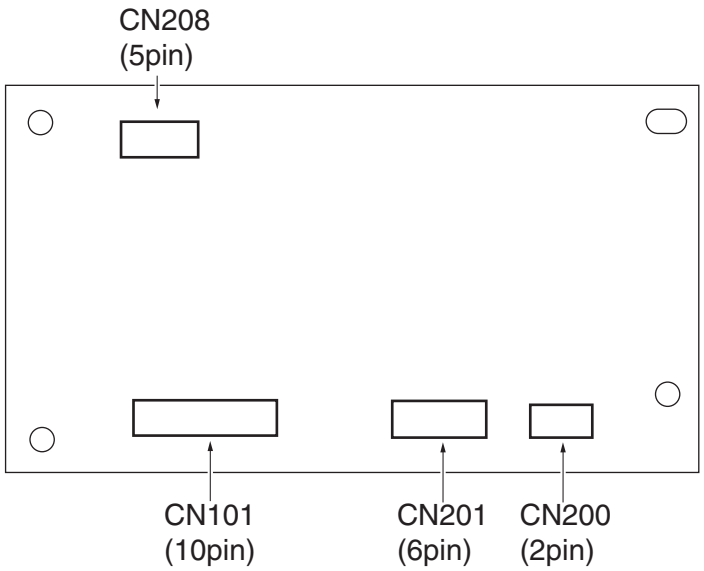


### 2.1.8 FS control board (FSCB)

#### (1) FS-533

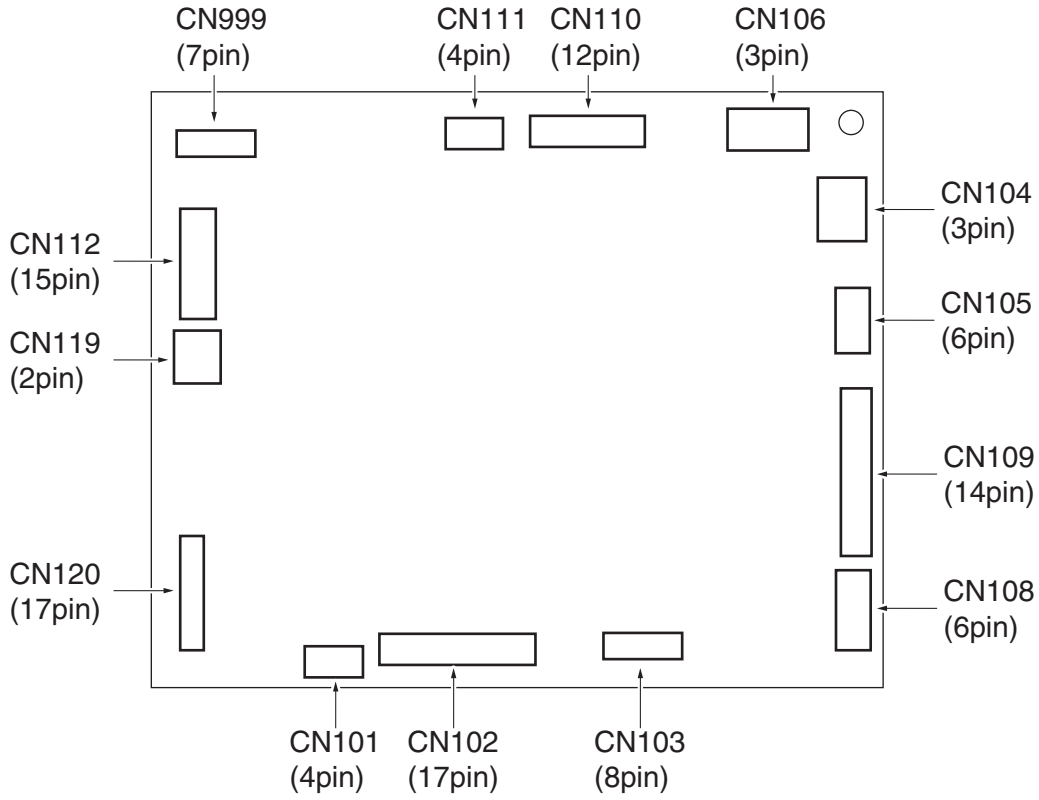

**(2) FS-534**

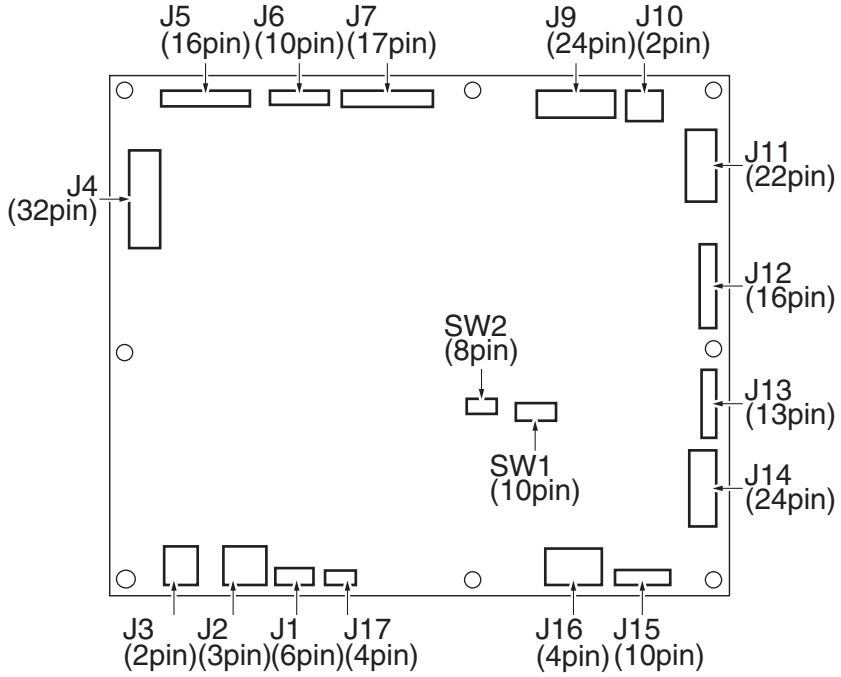


### 2.1.9 SD drive board (SDDB)

**(1) SD-511**

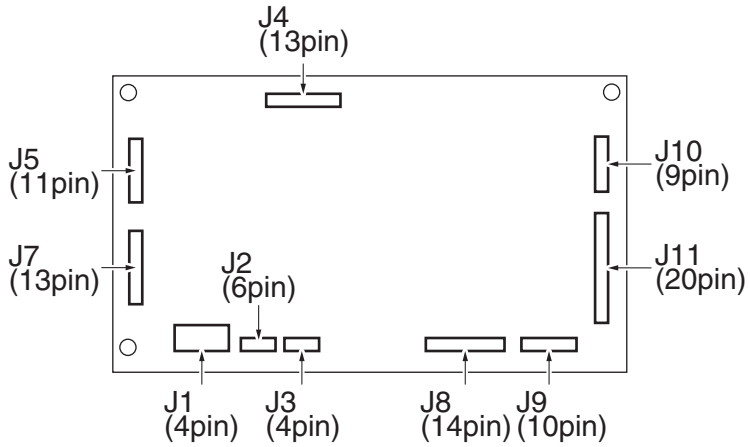

### 2.1.10 Stapler relay board (STREYB)

#### (1) FS-533

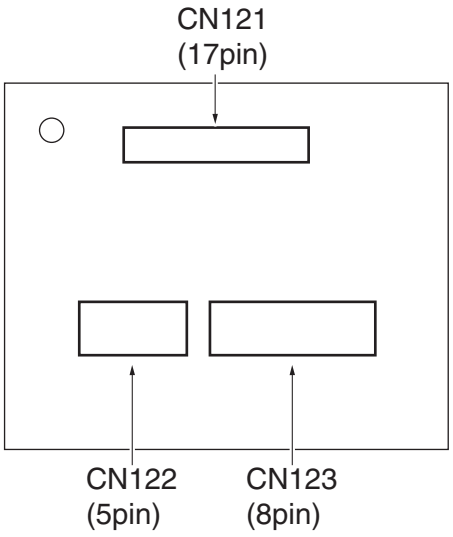


### 2.1.11 PK control board (PKCB)

#### (1) PK-519

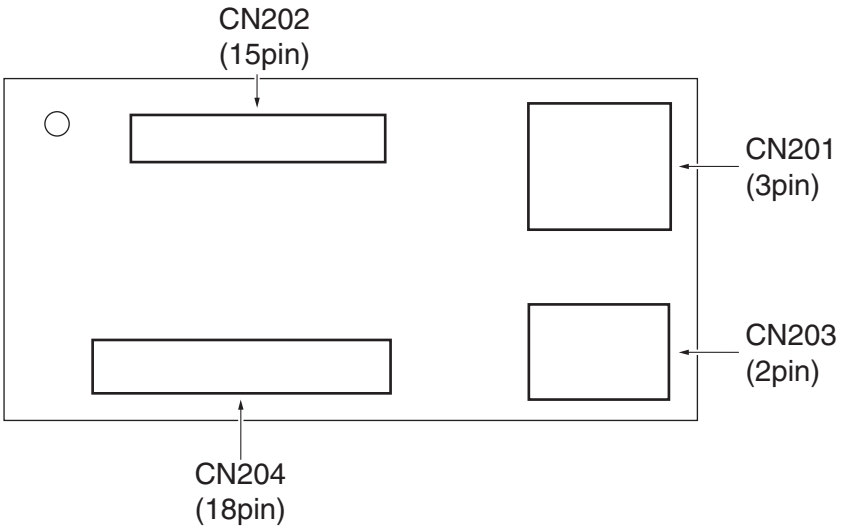


### 2.1.12 Clean unit drive board (CUDB)

#### (1) CU-101

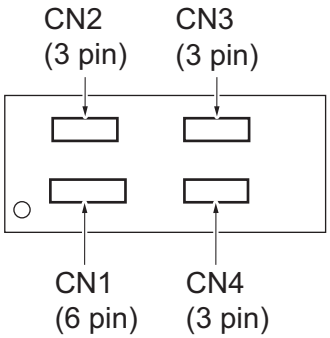

### 2.1.13 FAX board (FAXB)

#### (1) FK-514 (line 1/2)




#### (2) FK-515 (line 3/4)




## 2.2 RELAY CONNECTOR LAYOUT DRAWING

### 2.2.1 bizhub C368/C308/C258

#### (1) Main body

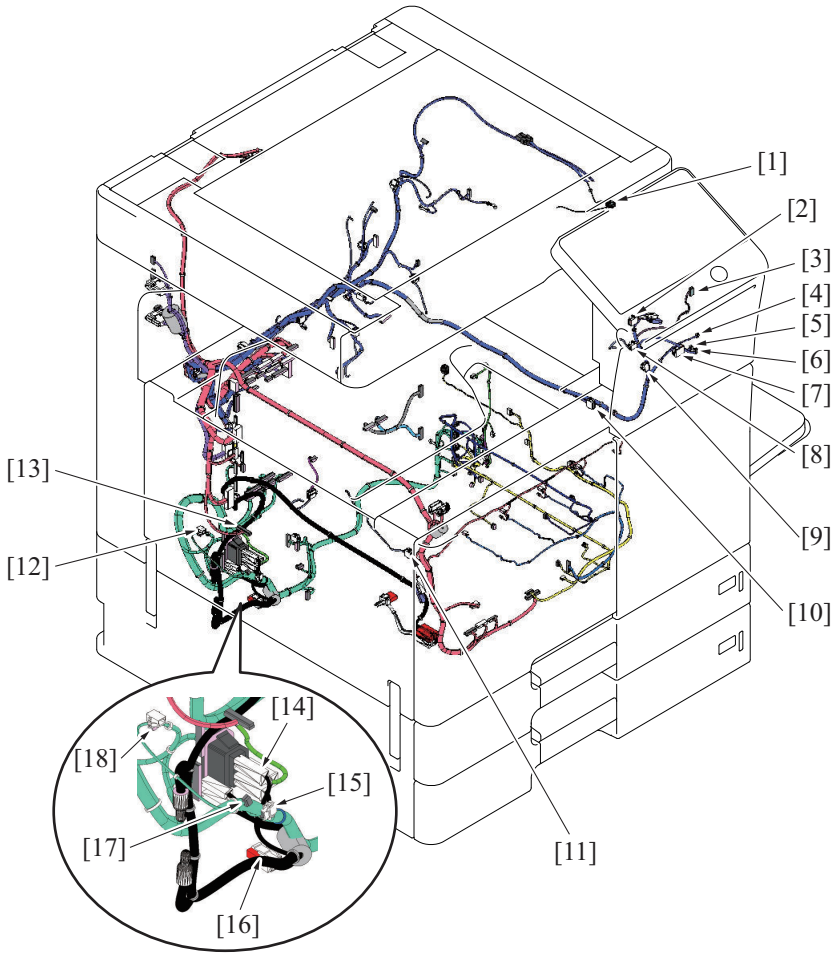

| No. | CN No. | Pin | Location | No. | CN No. | Pin | Location |
|---|---|---|---|---|---|---|---|
| [1] | CN603 | 2 Pin | 24-Q | [2] | CN156 | 2 Pin | 13-C |
| [3] | CN613 | 2 Pin | 22-Q | [4] | CN108 | 2 Pin | 7-C |
| [5] | CN104 | 3 Pin | 11-C | [6] | CN99 | 4 Pin | 11-C |
| [7] | CN98 | 5 Pin | 10-C | [8] | CN612 | 2 Pin | 21-Q |
| [9] | CN153 | 3 Pin | 10-C | [10] | CN126 | 4 Pin | 17-C |
| [11] | CN115 | 3 Pin | 9-C | [12] | CN64 | 2 Pin | 27-H |
| [13] | CN151 | 12 Pin | 9-K | [14] | CN1AC | 2 Pin | 17-X, 18-X |
| [15] | CN29 | 2 Pin | 24-H | [16] | CN2AC | 2 Pin | 23-D |
| [17] | CN26 | 3 Pin | 24-H | [18] | CN63 | 3 pin | 24-D |

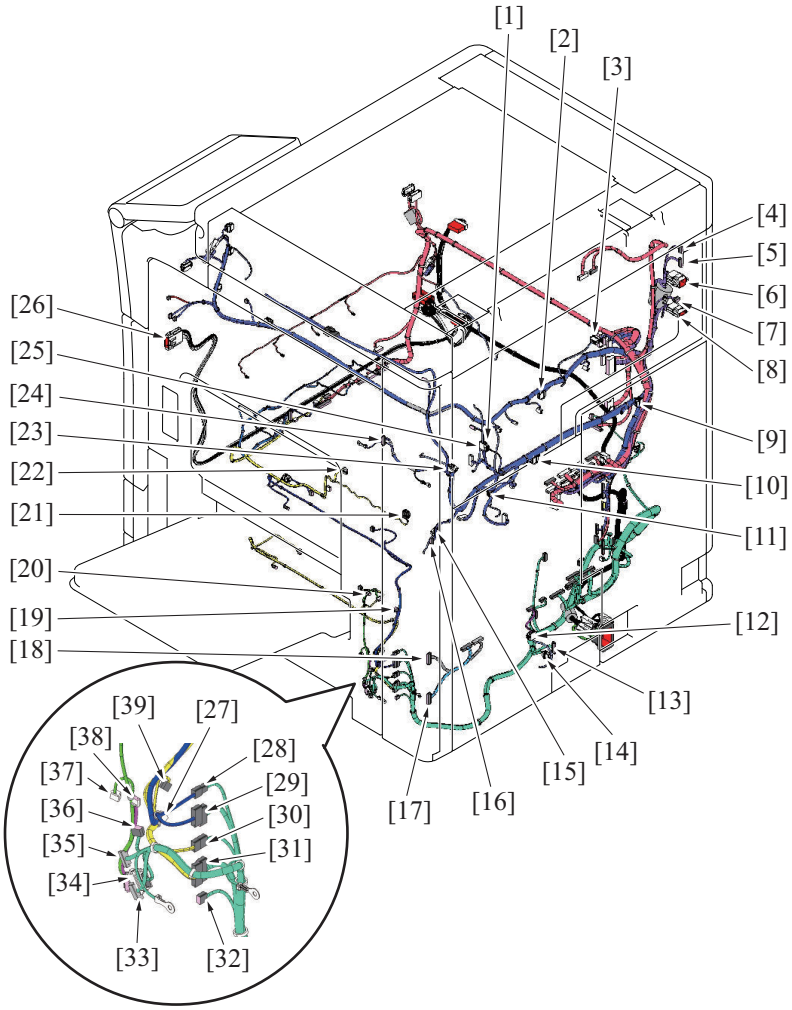


| No. | CN No. | Pin | Location | No. | CN No. | Pin | Location |
|---|---|---|---|---|---|---|---|
| [1] | CN118 | 2 Pin | 8-C | [2] | CN113 | 3 Pin | 10-C |
| [3] | CN125 | 4 Pin | 15-C | [4] | CN3DF | 7 Pin | 16-I |
| [5] | CN2DF | 9 Pin | 15-I | [6] | CN1DF | 4 Pin | 15-I |
| [7] | CN2FN | 6 Pin | 17-I | [8] | CN1FN | 3 Pin | 17-I |
| [9] | CN141 | 3 Pin | 9-D | [10] | CN157 | 3 Pin | 9-C |
| [11] | CN159 | 2 Pin | 7-C | [12] | CN301 | 4 Pin | 20-C |
| [13] | CN66 | 13 Pin | 23-D | [14] | CN65 | 2 Pin | 23-D |
| [15] | CN12 | 2 Pin | 7-C | [16] | CN9 | 6 Pin | 5-D |
| [17] | CN154 | 12 Pin | 3-T | [18] | CN155 | 12 Pin | 5-T |
| [19] | CN20 | 2 Pin | 22-I | [20] | CN33 | 2 Pin | 25-C |
| [21] | CN73 | 2 Pin | 5-K | [22] | CN142 | 2 Pin | 8-C |
| [23] | CN72 | 2 Pin | 6-K | [24] | CN5 | 10 Pin | 4-D |
| [25] | CN106 | 3 Pin | 9-C | [26] | CN1FIX | 3 Pin | 11-C |
| [27] | CN43 | 2 Pin | 28-C | [28] | CN34 | 3 Pin | 26-D |
| [29] | CN30 | 8 Pin | 25-D | [30] | CN37 | 4 Pin | 27-D |
| [31] | CN40 | 10 Pin | 27-D | [32] | CN152 | 3 Pin | 27-D |
| [33] | CN19 | 7 Pin | 22-H | [34] | CN59 | 4 Pin | 24-I |

| | | | | | | | |
|---|---|---|---|---|---|---|---|
| [35] | CN16 | 6 Pin | 21-H | [36] | CN13 | 3 Pin | 24-H |
| [37] | CN21 | 2 Pin | 22-I | [38] | CN60 | 3 Pin | 24-I |
| [39] | CN44 | 2 Pin | 28-C | - | - | - | - |

# M TIMING CHART

## 1. bizhub C368/C308/C258

### 1.1 Timing chart when the main power switch is turned ON

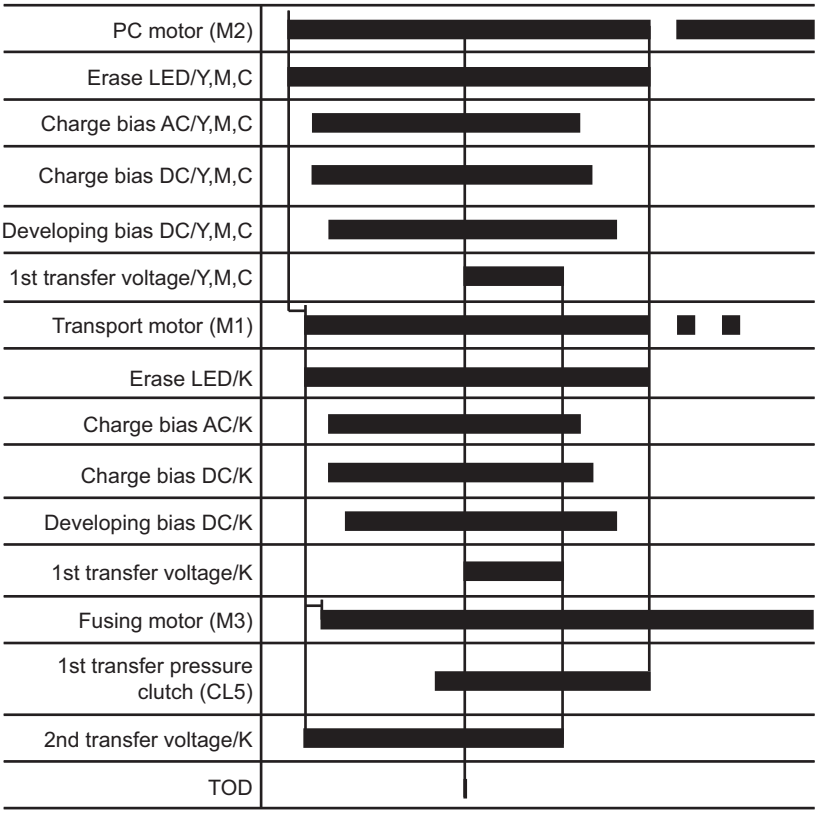

# 2. FS-534/SD-511

## 2.1 Shift mode

### 2.1.1 Operating conditions

| | |
|---|---|
| Paper size | A4 |
| Sheet of original | 2 originals |
| Type of original | 1-side |
| Number of copies | 2 copies |

### 2.1.2 Timing chart

Horizontal transport unit

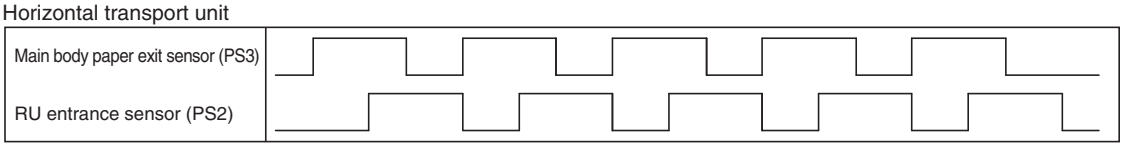


Sub tray

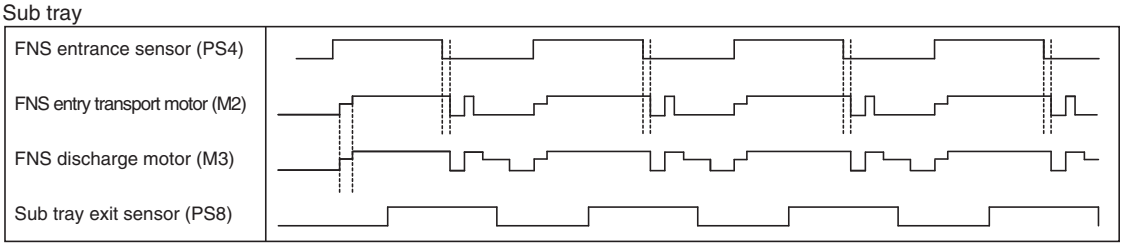


Main tray/Saddle tray

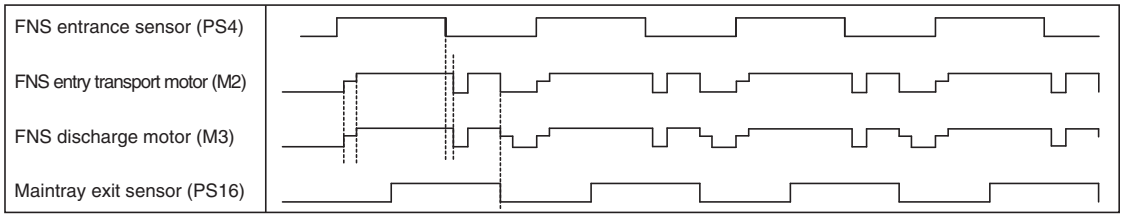


## 2.2 Center staples mode

### 2.2.1 Operating conditions

| | |
|---|---|
| Paper size | A4 |
| Sheet of original | 2 originals |
| Type of original | 1-side |
| Number of copies | 1 copies |

### 2.2.2 Timing chart

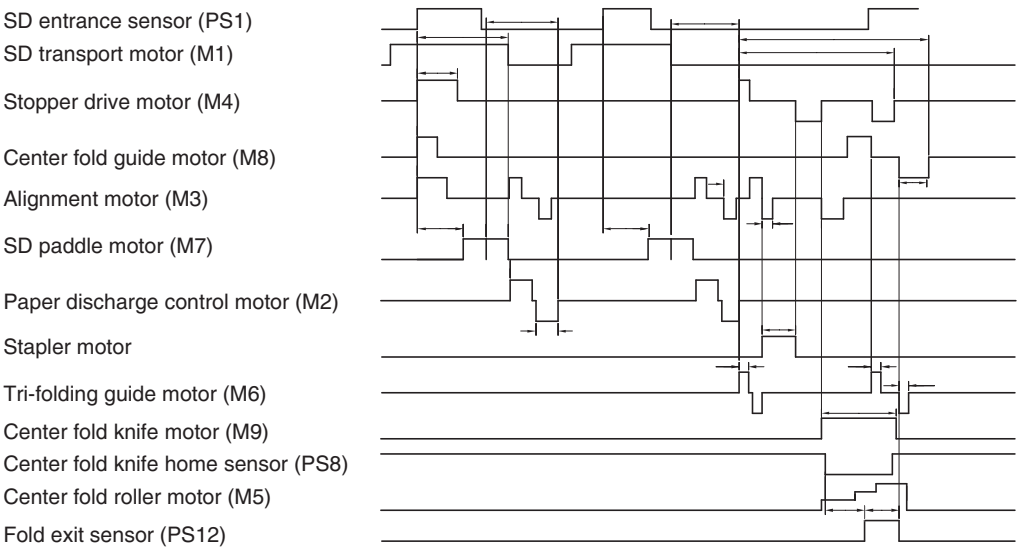

# N WIRING DIAGRAM

## 1. bizhub C368/C308/C258

### 1.1 Main body

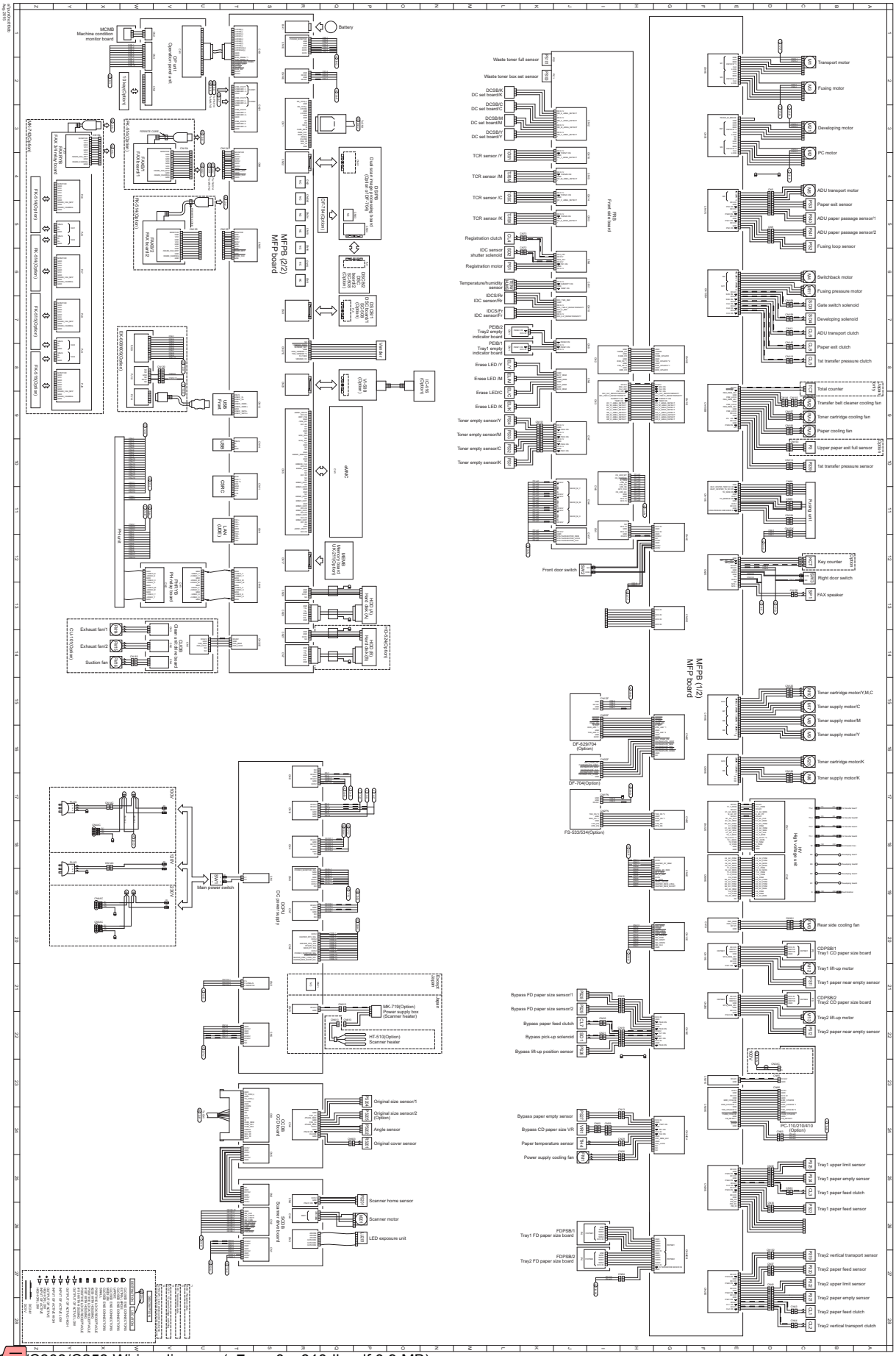


- bizhub C368/C308/C258 Wiring diagram (a7pum0nc810db.pdf 0.9 MB)

- bizhub C368/C308/C258 Wiring diagram A3 size (1/4) (a7pum0nc811db.pdf 0.7 MB)
- bizhub C368/C308/C258 Wiring diagram A3 size (2/4) (a7pum0nc812db.pdf 0.7 MB)
- bizhub C368/C308/C258 Wiring diagram A3 size (3/4) (a7pum0nc813db.pdf 0.7 MB)
- bizhub C368/C308/C258 Wiring diagram A3 size (4/4) (a7pum0nc814db.pdf 0.7 MB)

# 2. Option

## 2.1 DF-629

### 2.1.1 DF-629

a3cfm0nc820da
May 2015

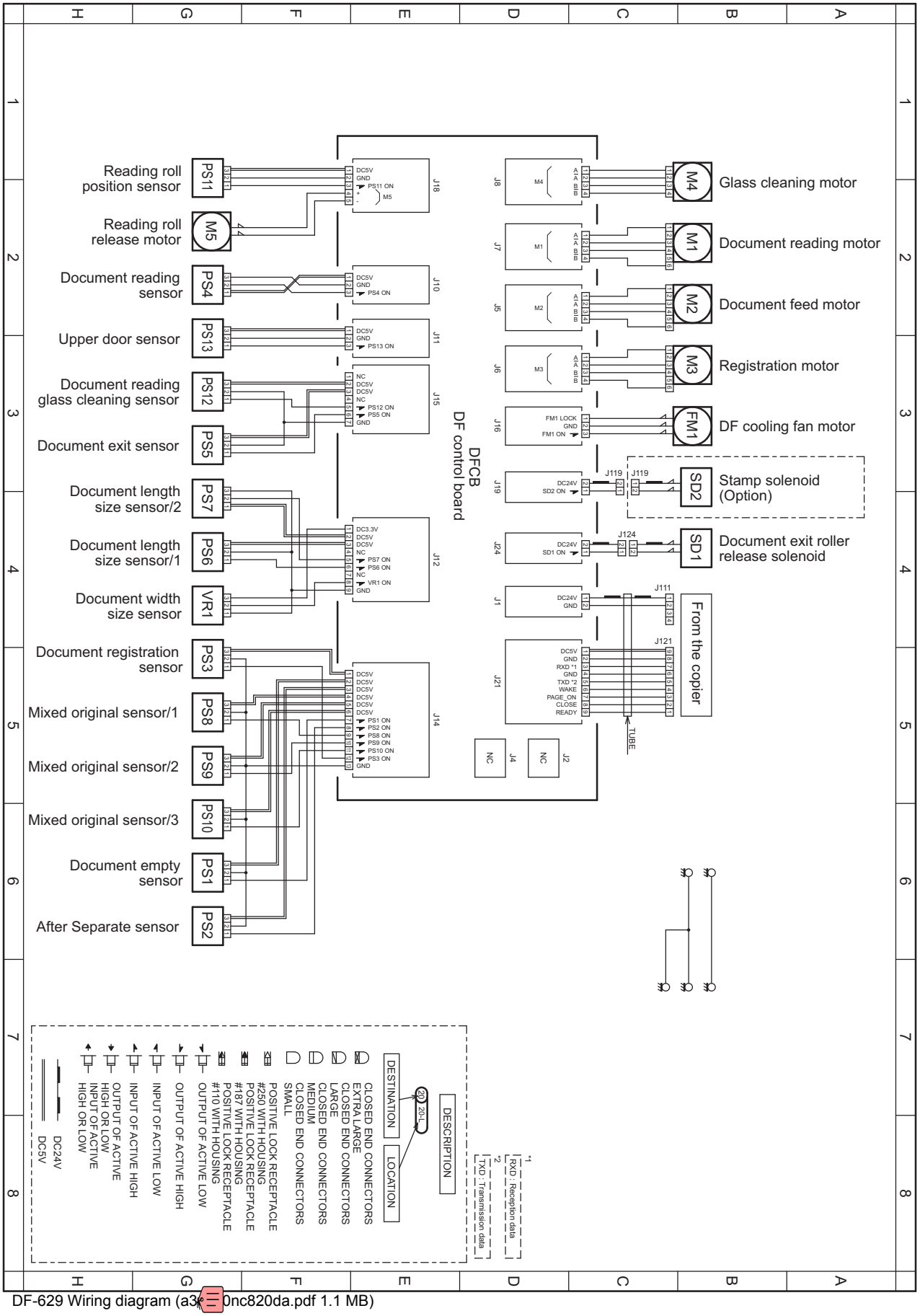


- DF-629 Wiring diagram (a3cfm0nc820da.pdf 1.1 MB)

## 2.2 DF-704

### 2.2.1 DF-704

a3cem0nc820da
May 2015

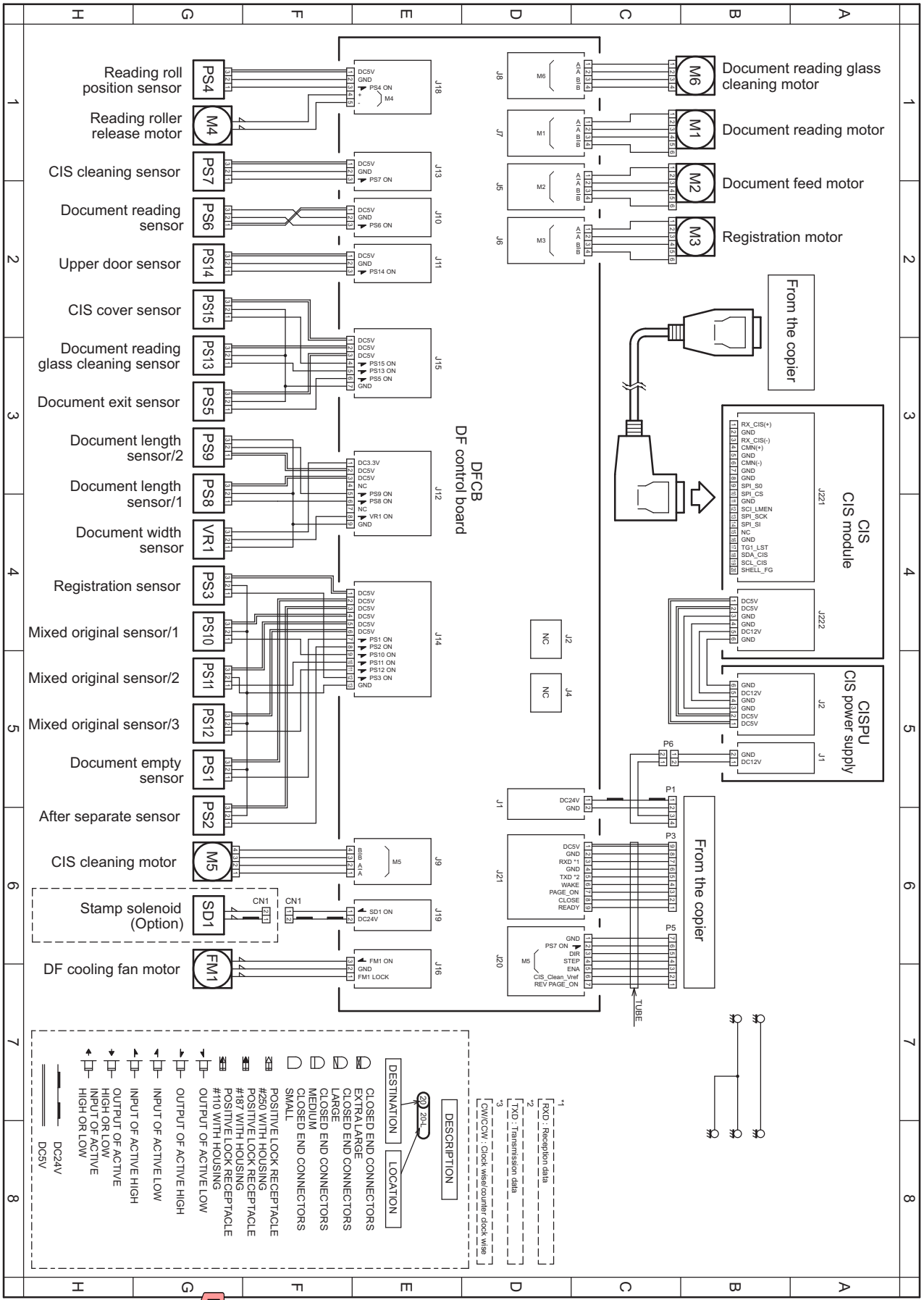


- DF-704 Wiring diagram (a3[illegible]0nc820da.pdf 1.1 MB)

## 2.3 PC-110

### 2.3.1 PC-110

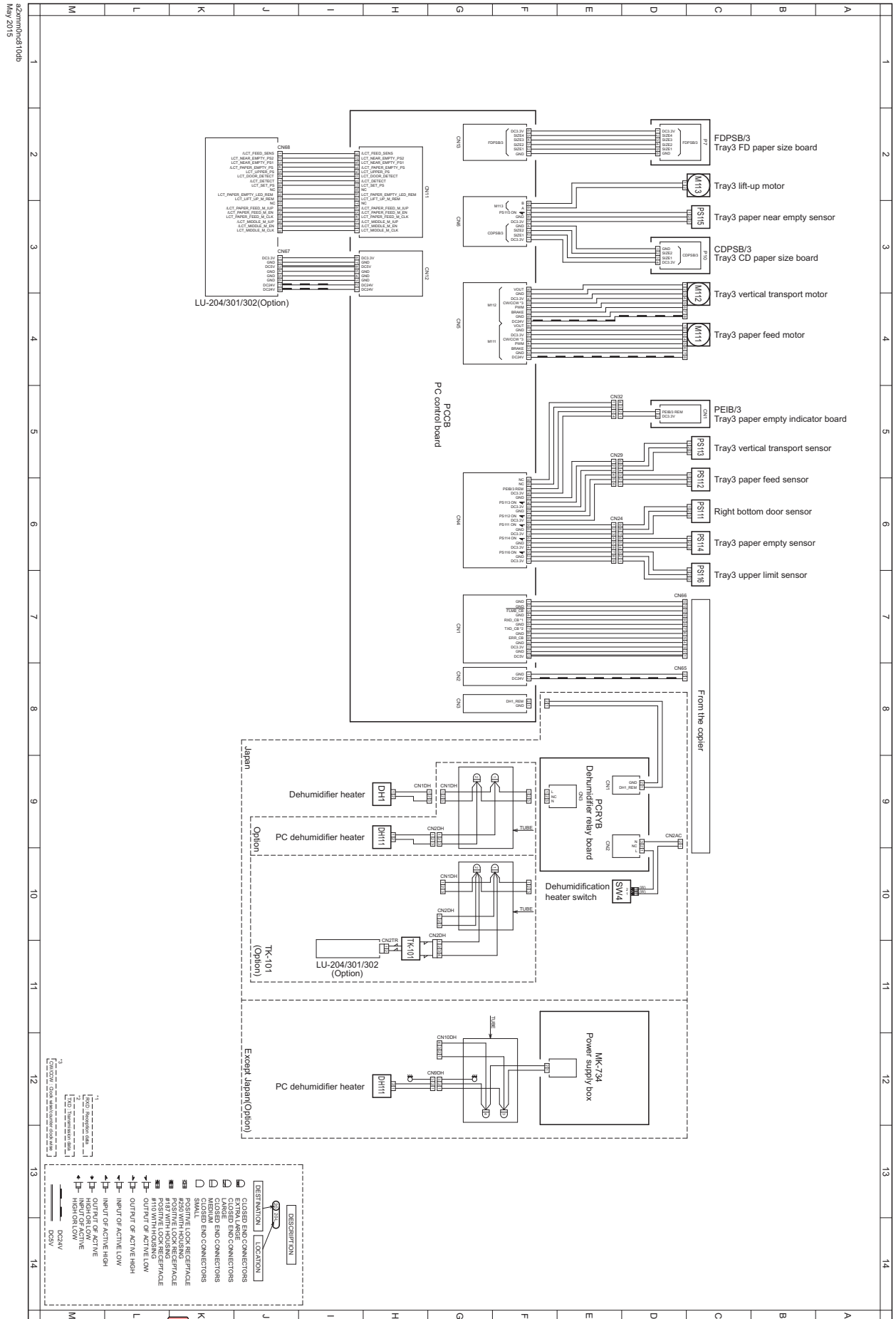


- PC-110 Wiring diagram (a2[illegible]n0nc810db.pdf 0.7 MB)

## 2.4 PC-210

### 2.4.1 PC-210

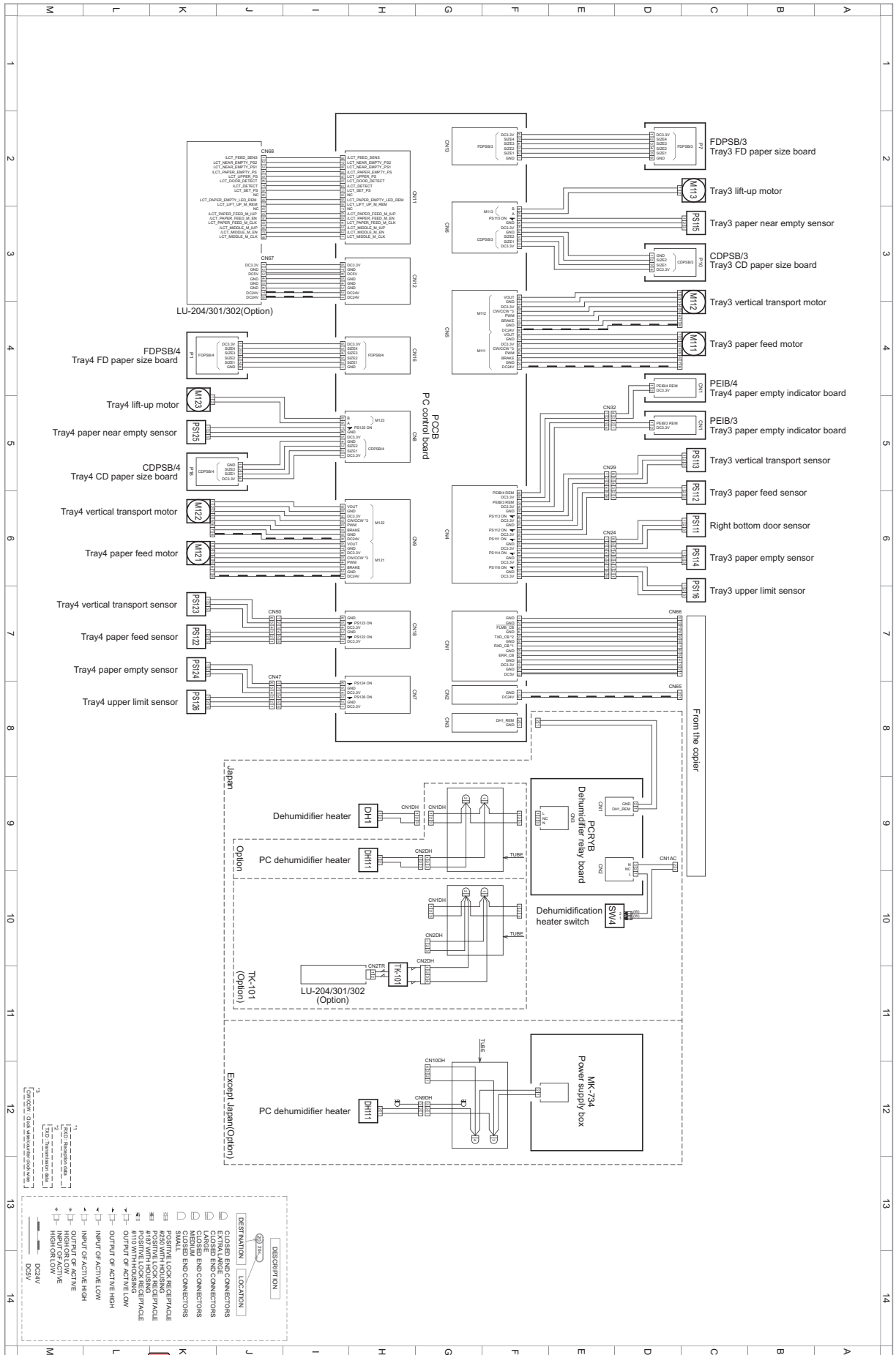


- PC-210 Wiring diagram (a2[illegible]n0nc820db.pdf 1.5 MB)

## 2.5 PC-410

### 2.5.1 PC-410

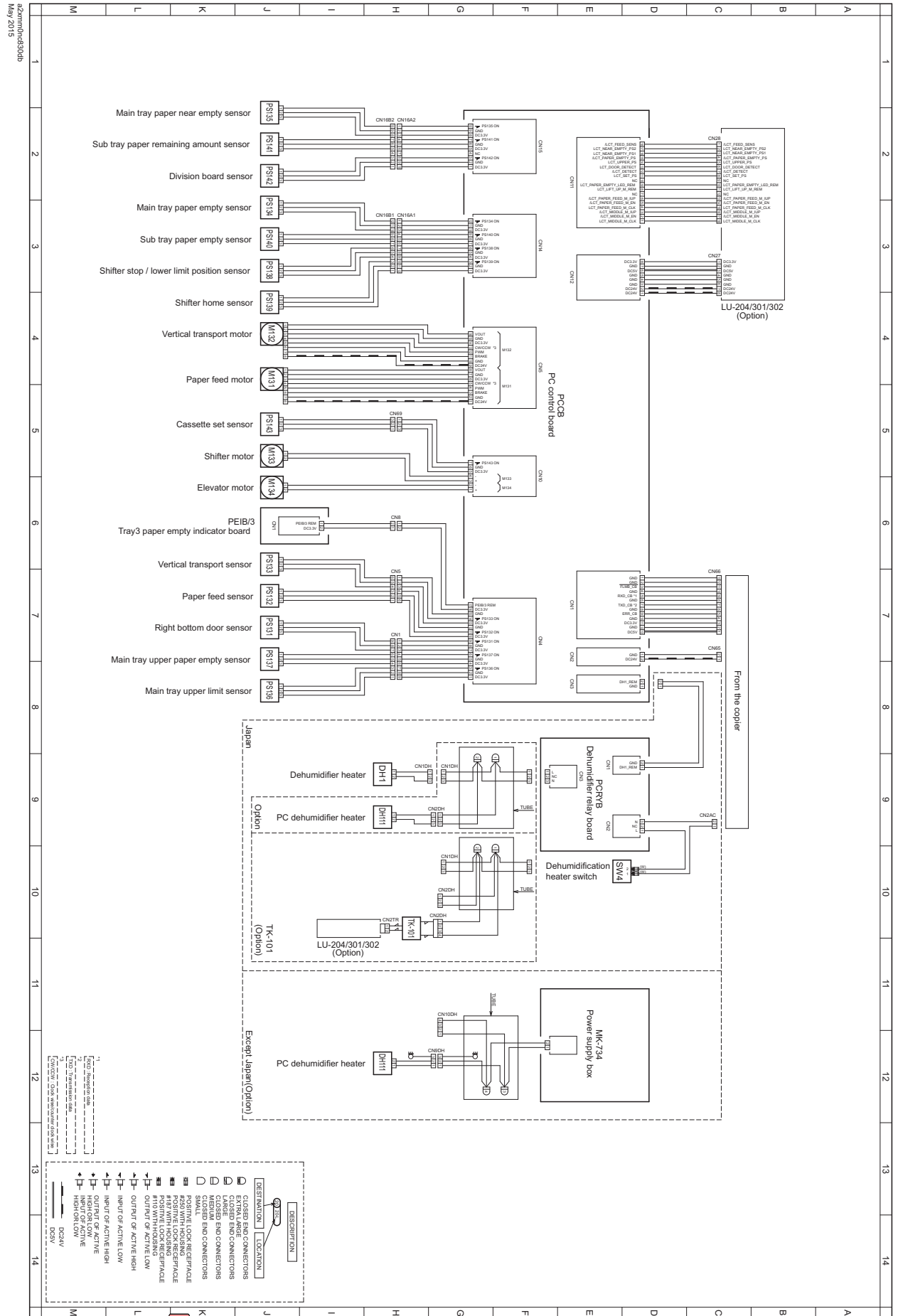


- PC-410 Wiring diagram (a2[illegible]n0nc830db.pdf 1.3 MB)

## 2.6 LU-302

### 2.6.1 LU-302

a87vm0nc810da
May 2015

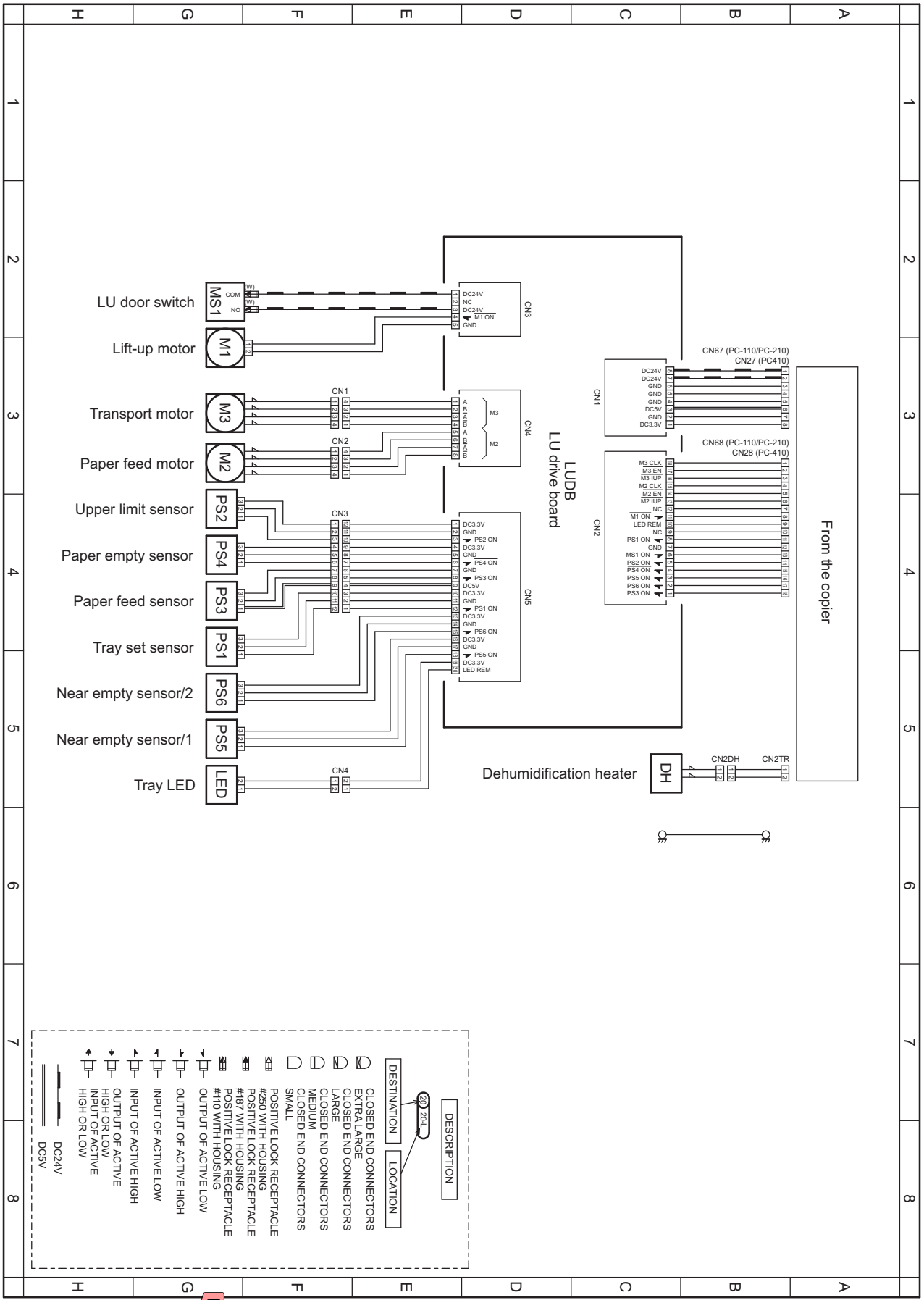


- LU-302 Wiring diagram (a87vm0nc810da.pdf 1.1 MB)

## 2.7 FS-533

### 2.7.1 FS-533

FS-533 Overall wiring diagram

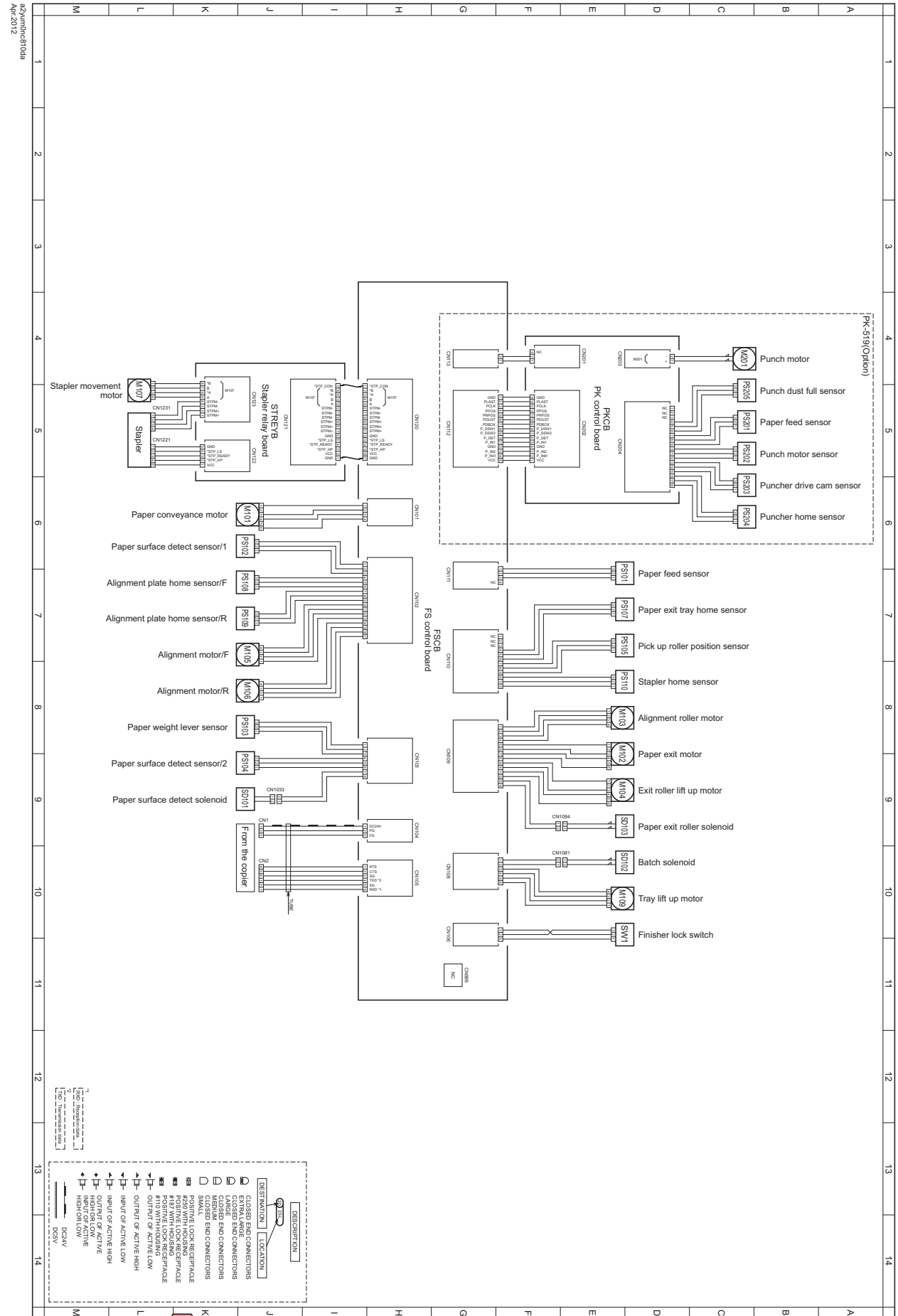


- FS-533 Wiring diagram (a2[illegible]0nc810da.pdf 1.3 MB)

## 2.8 FS-534

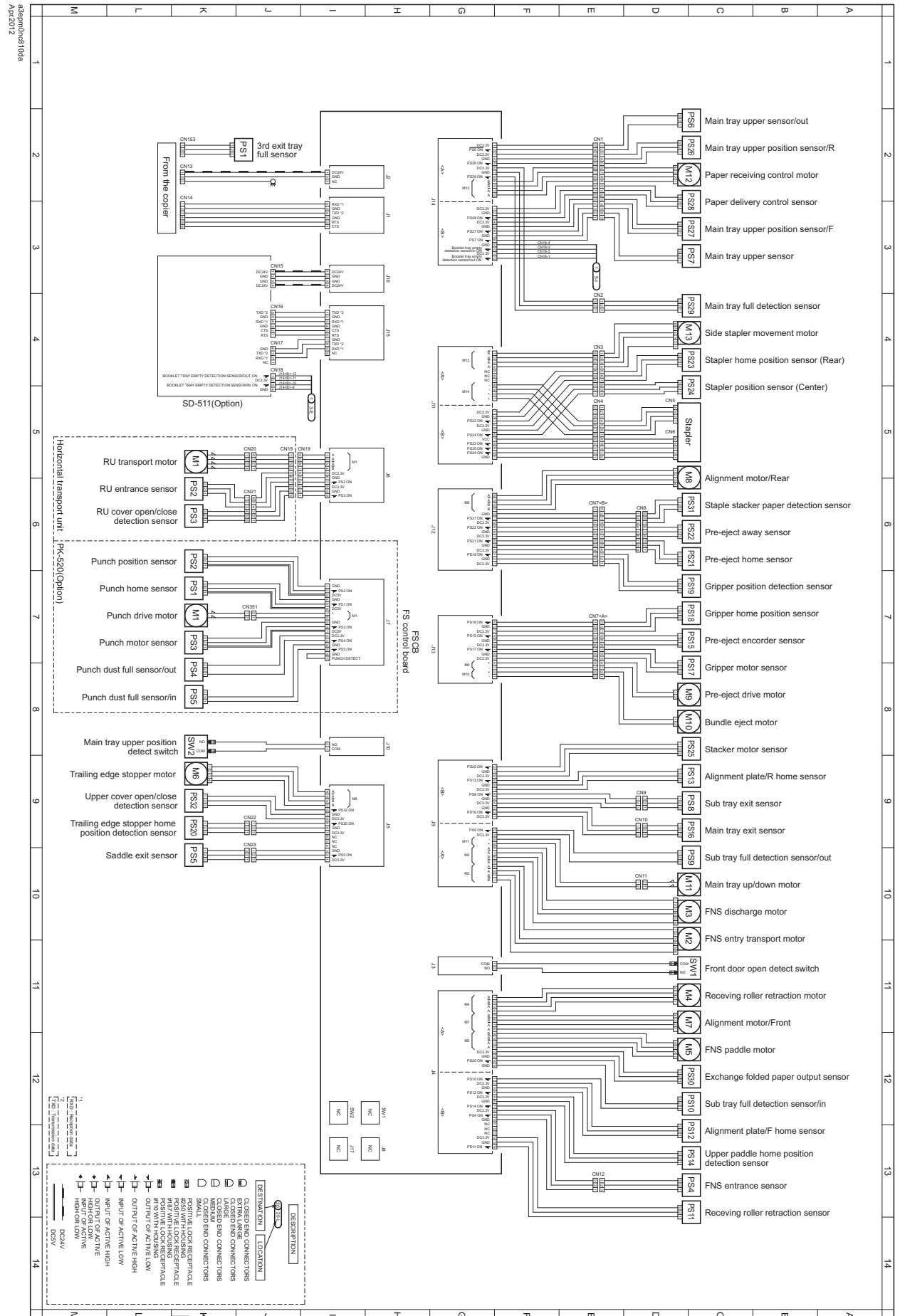


- FS-534 Wiring diagram (a3epmhnc810da.pdf 2.0 MB)

## 2.9 FS-534SD

A3ER-B001-0A
Dec.2011

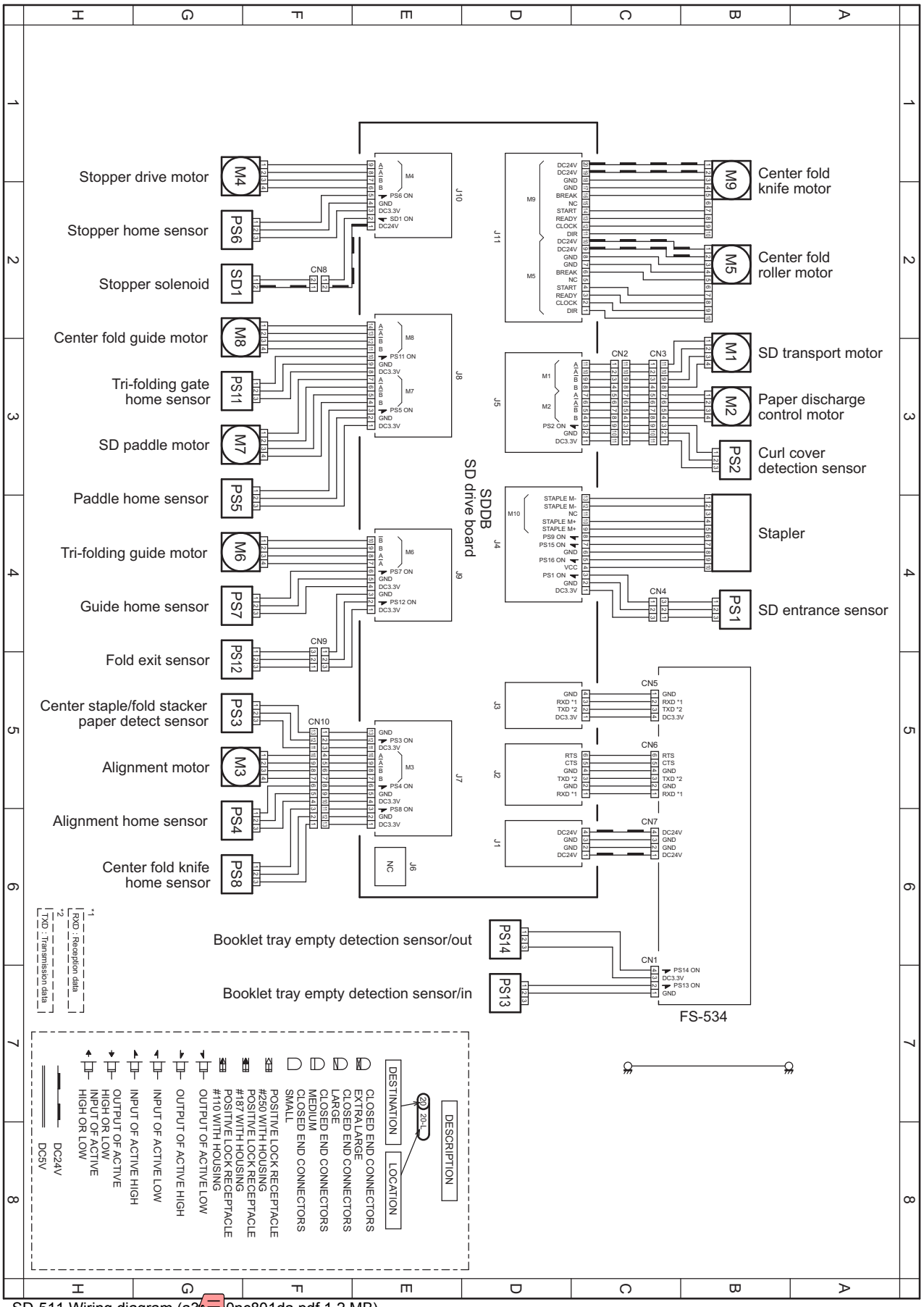


- SD-511 Wiring diagram (a3[illegible]0nc801da.pdf 1.2 MB)

## 2.10 JS-506

### 2.10.1 JS-506

a2yvm0nc810da
Apr.2012

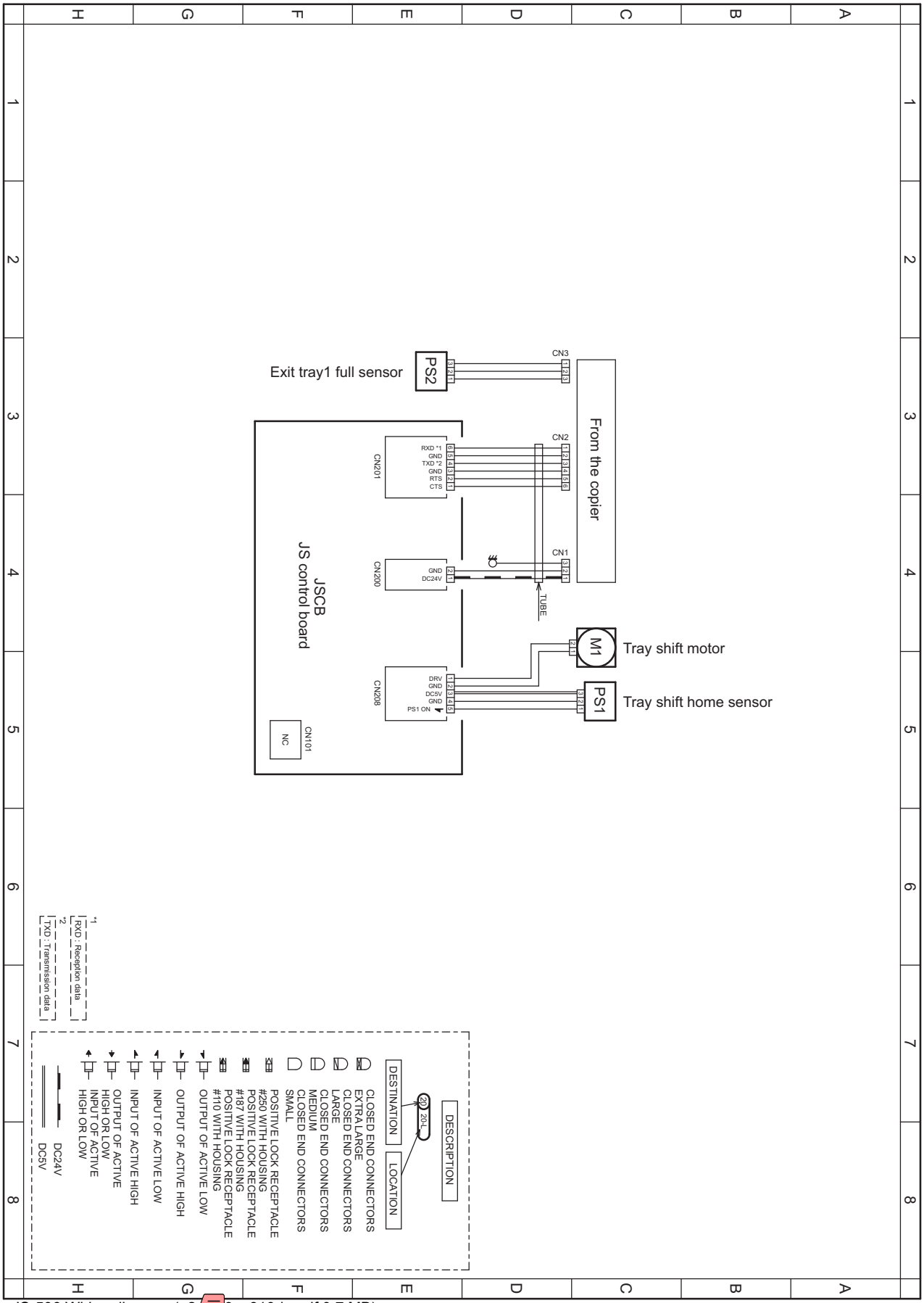


- JS-506 Wiring diagram (a2yvm0nc810da.pdf 0.7 MB)

# O THEORY OF OPERATION C368/C308/C258

## 1. INTERFACE SECTION

### 1.1 Configuration

#### 1.1.1 Front side

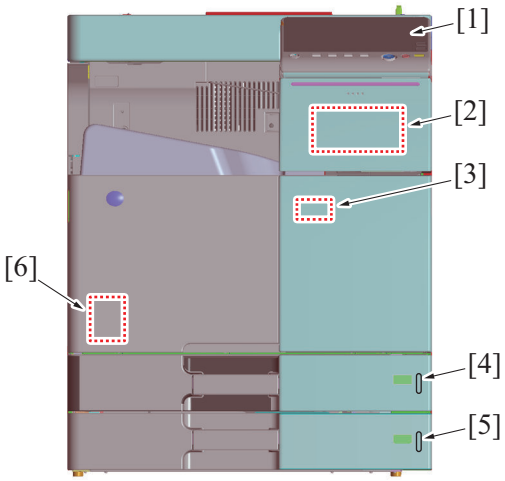


| | | | |
|---|---|---|---|
| [1] | Control panel | [2] | IC card reading position *2 |
| [3] | Total counter *1 | [4] | Tray 1 paper remaining level display (Blinking: near empty, Lit up: empty) |
| [5] | Tray 2 paper remaining level display (Blinking: near empty, Lit up: empty) | [6] | Main power switch (SW1) |

- *1: Japan only
- *2: When a MFP main body is equipped with an optional authentication unit AU-201 and MK-735.

**(1) Front door inside**

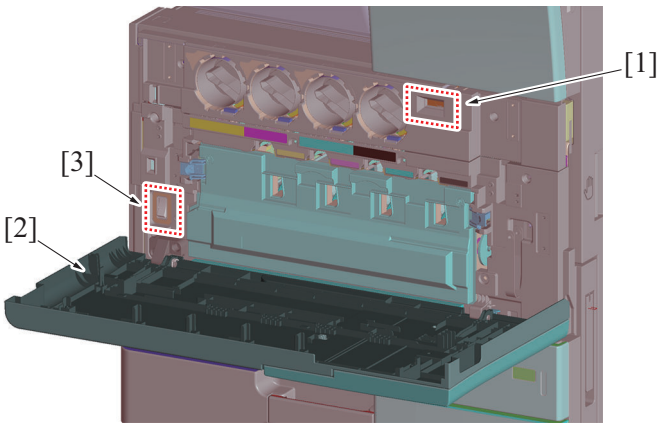


| | | | |
|---|---|---|---|
| [1] | Total counter * | [2] | Front door (open position) |
| [3] | Main power switch (SW1) | - | - |

- *: Japan only

### (2) Control panel section

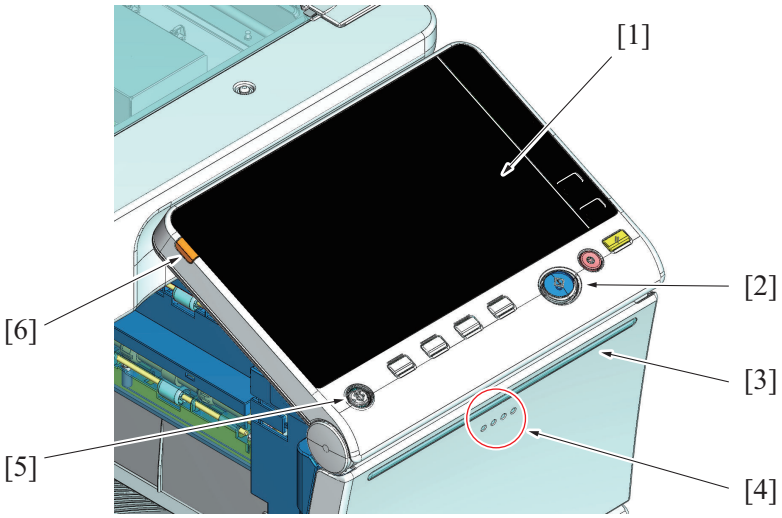


| | | | |
|---|---|---|---|
| [1] | Touch panel | [2] | Start key *1 |
| [3] | Operation status indicator section *1 | [4] | Data indicator *1 |
| [5] | Power key *1 | [6] | Warning Status indicator section *1 |

*1: For details of the control state of lighting and blinking, refer to O THEORY OF OPERATION 22. INDICATOR FUNCTION.

## 1.1.2 Right side

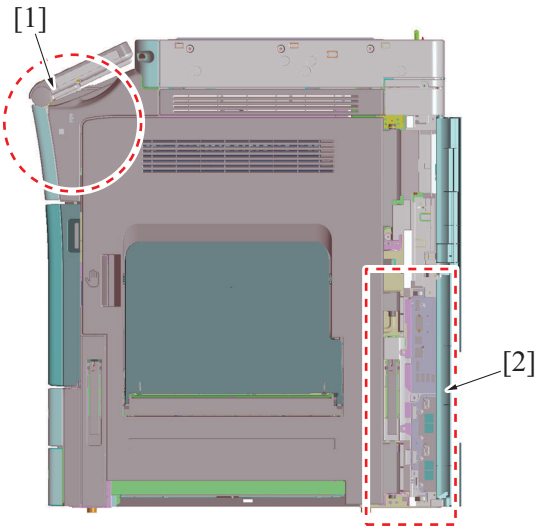


| | | | |
|---|---|---|---|
| [1] | Front side | [2] | Rear lower side |

### (1) Front side

**NOTE**

- **USB port [2] is extended from the rear lower side USB port by the USB cable. If the USB cable extended from the rear lower side USB port is unplugged, the front side USB port is no longer operational.**

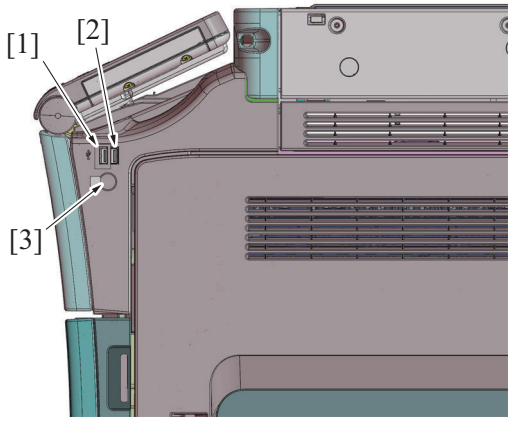

| | | | |
|---|---|---|---|
| [1] | USB port (Type A, optional) *1 | [2] | USB port (Type A, standard) *2 |
| [3] | Voice guidance output terminal *1 | - | - |

- *1: When the local interface kit EK-608/EK-609 is mounted.
- *2: Do not use this port for connecting to an optional authentication unit; use the rear lower USB port.

### (2) Rear lower side

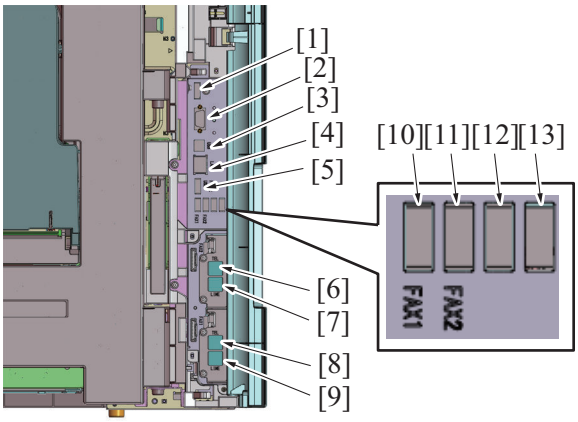


| | | | |
|---|---|---|---|
| [1] | Control panel connection connector | [2] | Serial port (for CS remote care modem connection) |
| [3] | USB port (Type B) USB2.0/1.1 | [4] | Network port (1000Base-T/100Base-TX/10Base-T) |
| [5] | USB extension port (USB extension cable to the USB board at the front side) | [6] | LINE terminal 2 (for telephone line 2) *2 |
| [7] | TEL terminal 2 (not used) | [8] | LINE terminal 1 (for telephone main line) *1 |
| [9] | TEL terminal 1 (for external telephone main line) *1 | [10] | FAX kit FK-514 connection port (for main line) *1 |
| [11] | FAX kit FK-514 connection port (for line 2) *2 | [12] | USB port (Type A) USB2.0/1.1 (for Authentication Unit or Upgrade Kit) |
| [13] | USB port (Type A) USB2.0/1.1 (for Authentication Unit or Upgrade Kit) | - | - |

- *1: When only one optional FK-514 unit is mounted
- *2: When two optional FK-514 units are mounted

**NOTE**

- **If only one optional FK-514 is mounted, always mount it to the main line position (lower side).**

## 1.1.3 Rear side

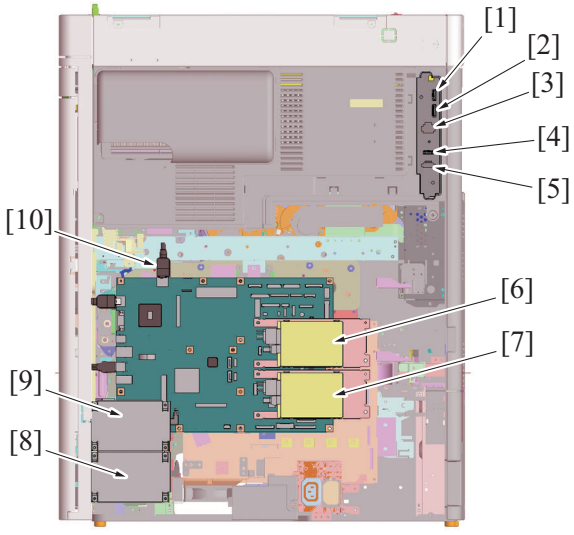


| | | | |
|---|---|---|---|
| [1] | Document feeder connection connector (for DF-704) | [2] | Document feeder connection connector (for DF-629/ DF-704) |
| [3] | Document feeder connection connector (for DF-629/ DF-704) | [4] | Finisher connection connector |
| [5] | Finisher connection connector | [6] | HDD (A) |
| [7] | HDD (B) * | [8] | FAX kit FK-514 (for main line) * |
| [9] | FAX kit FK-514 (for line 2) * | [10] | Scanner connection connector (image signal) |

- *: Optional hard disk HD-524

# 2. SCANNER SECTION

## 2.1 Configuration

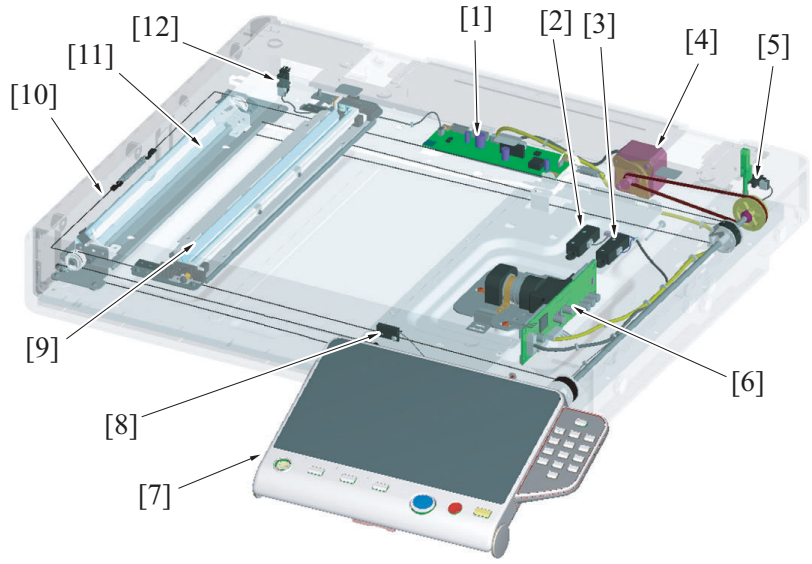


| | | | |
|---|---|---|---|
| [1] | Scanner drive board (SCDB) | [2] | Original size sensor/1 (PS204) |
| [3] | Original size sensor/2 (PS205) * | [4] | Scanner motor (M201) |
| [5] | Angle sensor (PS202) | [6] | CCD board (CCDB) |
| [7] | Control panel (capacitive touch panel) | [8] | Original cover sensor (RS201) |
| [9] | LED exposure unit (LU201) | [10] | Scanner cable |
| [11] | Mirror unit | [12] | Scanner home sensor (PS201) |

*: Option

## 2.2 Drive

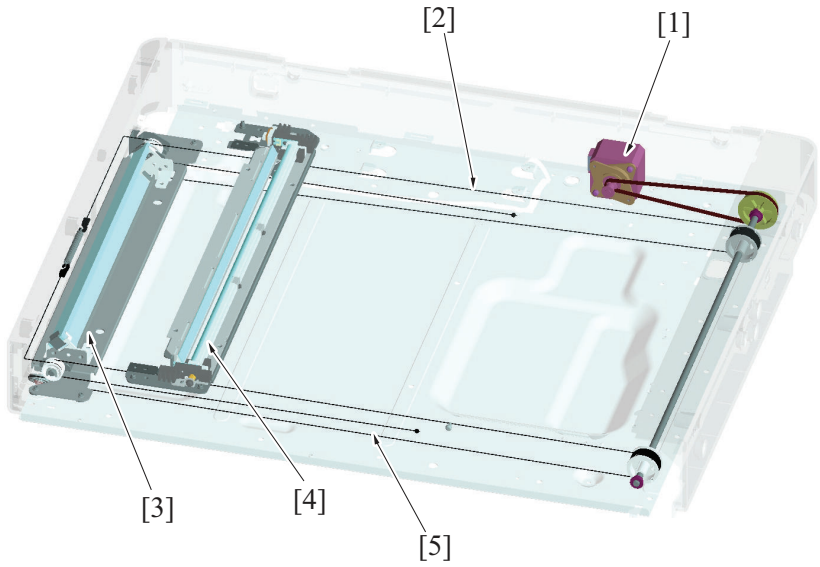


| | | | |
|---|---|---|---|
| [1] | Scanner motor (M201) | [2] | Scanner drive cable/R |
| [3] | Mirror unit | [4] | LED exposure unit (LU201) |
| [5] | Scanner drive cable/F | - | - |

## 2.3 Operation

### 2.3.1 LED exposure unit

- LEDs (Light Emitting Diodes) are used for the light source of the scanner section for power saving.
- LEDs mounted on the LED board on one side (rear side) of the LED exposure unit emit light.
- Light emitted from the LED travels along the light guide.
- The original is exposed to uniform, stable light by direct light that is emitted from both light guides.

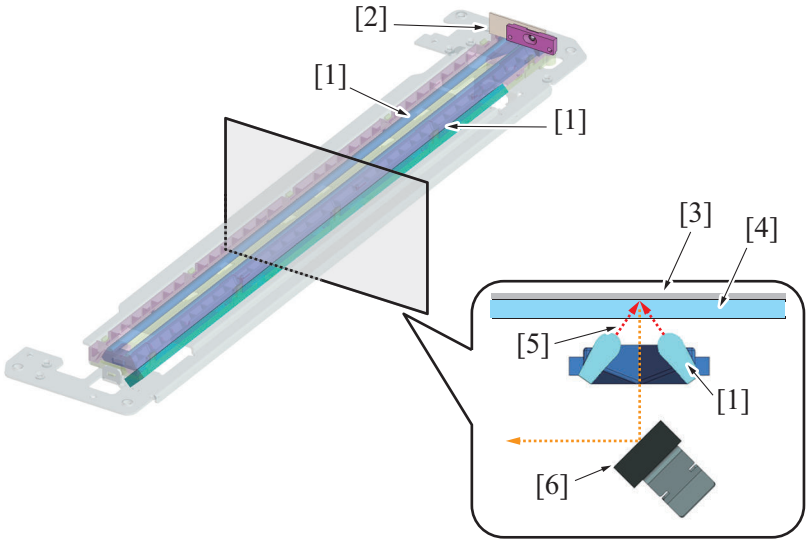


| | | | |
|---|---|---|---|
| [1] | Light guide | [2] | LED board |
| [3] | Original | [4] | Original glass |
| [5] | Direct light | [6] | Reflective mirror |

### 2.3.2 When the power is ON

1. When the power is turned ON, the LED lights up.
2. The LED exposure unit moves to the home position.
3. The LED exposure unit moves from the home position to the shading position (under the shading correction sheet).
4. The gain value of the CCD sensor output voltage to R, G, and B is adjusted.
5. After adjusting the gain value, a shading correction is performed.
6. The LED exposure unit moves in the return direction and stops at the home position.
7. When the DF is raised for placement of the original, the LED exposure unit moves to the original size detection position.

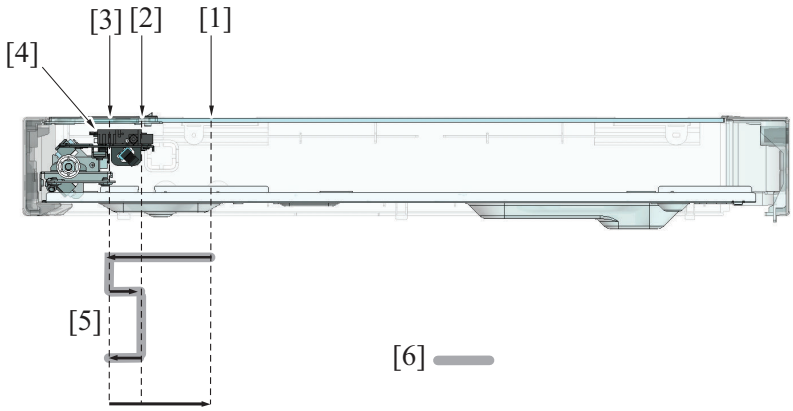


| | | | |
|---|---|---|---|
| [1] | Original size detection position | [2] | Shading position |
| [3] | Home position | [4] | LED exposure unit (LU201) |
| [5] | Shading correction | [6] | The LED turns ON |

### 2.3.3 Control when the Start key is pressed

#### (1) Original scanning mode

- Original scanning mode has two types: Original cover mode and DF mode.

##### (a) Original cover mode

1. Turning the Start key ON will turn the LED ON.
2. The LED exposure unit moves in the return direction and stops at the shading position. At the shading position, the gain adjustment is made.
3. The LED exposure unit moves in the return direction and stops at the scan start position.
4. To start a scan, the LED exposure unit moves from the scan start position to the leading edge of an original while performing shading correction.
   The exposure unit will start reading the original image from the leading edge.
   The unit will finish reading the image at the trailing edge of the original.
5. The LED will turn OFF when the reading is complete.
6. The LED exposure unit moves from the position of the trailing edge of the image to the home position.

It returns to the home position after moving from the shading position to the home position.
It moves from the home position to the original size detection position.
It scans only once even for the color-copies, since R, G, and B data will all be memorized in one scanning.

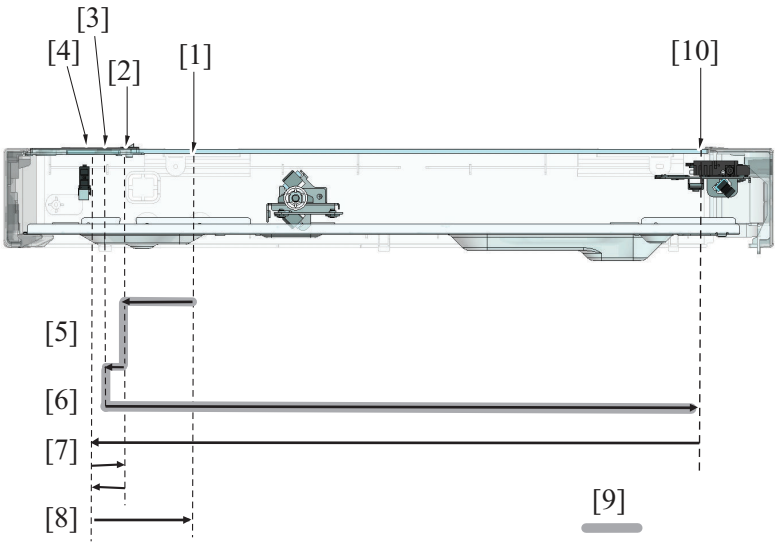


| | | | |
|---|---|---|---|
| [1] | Original size detection position | [2] | Shading position |
| [3] | Scan start position | [4] | Home position |
| [5] | Gain adjustment | [6] | Read original |
| [7] | Returns to the home position | [8] | Moves to the original size detection position |
| [9] | The LED turns ON | [10] | Trailing edge of the image |

**(b) DF mode (DF-629: 1st side/2nd side, DF-704: 1 side)**

- The original fed by the document feeder will be read at the DF original glass for. The LED exposure unit will move to the reading position and stops. The original will be read as the paper is transferred.

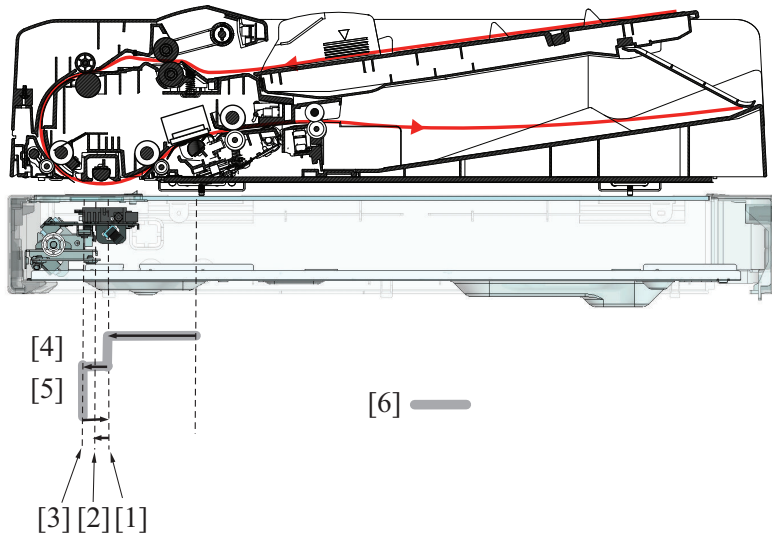


| | | | |
|---|---|---|---|
| [1] | Shading position | [2] | Home position |
| [3] | Original reading position | [4] | Shading correction |
| [5] | Read original | [6] | The LED turns ON |

**(2) Original scanning control**

- The light reflected off the exposed original reaches the CCD sensor via the lens.
- The CCD sensor outputs an electric signal (analog) that varies according to the intensity of the light.
- One CCD sensor has a photo receiver that individually responds to each of the three primary colors of R, G, and B.
- The electric signal is converted to digital data for each of R, G, and B by the CCD board (CCDB), becoming individual digital signals.
- Analog-to-digital conversion is made according to an instruction given by the MFP board (MFPB).

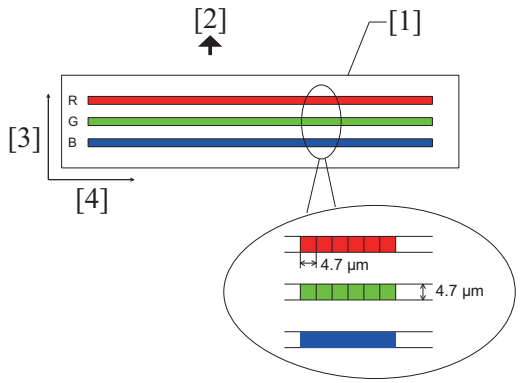


| | | | |
|---|---|---|---|
| [1] | CCD sensor | [2] | Scanning direction |
| [3] | Sub scanning direction | [4] | Main scanning direction |

#### (a) Calibration

The following adjustment and correction (calibration) are made before the original is scanned, so that the image of the original can be adequately read. For details, see "O.18.1 Scanner section image processing block diagram".

- Gain adjustment
- Shading correction

### 2.3.4 Original scanning area

- Original scanning areas vary depending on a scanning mode.

#### (1) Original cover mode

- Main scanning direction: Max. 297.0 mm (11 11/16 inches)
- Sub scanning direction: Max. 431.8 mm (17 inches)

#### (2) DF mode

##### (a) Scanning at 400 dpi or less

- Main scanning direction: Max. 297.0 mm (11 11/16 inches)
- Sub scanning direction: Max. 1,000.0 mm* (39 3/8 inches*)

**NOTE**

- ***: FAX mode only**

##### (b) Scanning at 600 dpi

- Main scanning direction: Max. 297.0 mm (11 11/16 inches)
- Sub scanning direction: Max. 432.0 mm (17 inches)

### 2.3.5 Original size detection control

#### (1) Detection method

- For the sub scanning (length) direction, the fixed reflective original size sensor (one beam) is used.
- For the main scanning (width) direction, the CCD is used.
- A standard original size is determined by the state of the original size sensor, either the activated or deactivated state, and the width detected by the CCD.
- For a custom size, the control sets a smallest possible standard size that is larger than the custom size in question to thereby prevent void image.

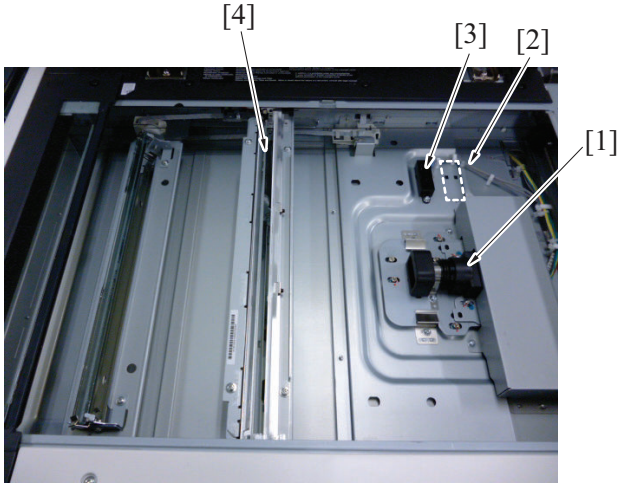

| | | | |
|---|---|---|---|
| [1] | CCD board (CCDB) | [2] | Original size sensor/2 (PS205) * |
| [3] | Original size sensor/1 (PS204) | [4] | LED exposure unit (LU201) |

- *: Option

### (2) Original size judgment

**NOTE**

- **Table 1 or 2 can be selected in the service mode.**

#### (a) Criterion (Japan)

Table1

| Original size sensor/1 (PS204) | Main scanning width (mm) | | | | | |
|---|---|---|---|---|---|---|
| | 0 to 130.0 | Up to 153.0 | Up to 187.0 | Up to 215.0 | Up to 262.0 | 262.1 or over |
| OFF | No original | A5S | B5S | A4S | B5 | A4 |
| ON | A3 | B4 | B4 | B4 | B4 | A3 |

Table2

| Original size sensor/1 (PS204) | Main scanning width (mm) | | | | | | | | |
|---|---|---|---|---|---|---|---|---|---|
| | 0 to 130.0 | Up to 143.9 | Up to 153.0 | Up to 187.0 | Up to 213.0 | Up to 220.9 | Up to 262.0 | Up to 284.4 | 284.5 or over |
| OFF | No original | $5^1/_2$×$8^1/_2$S | A5S | B5S | A4S | $8^1/_2$×11S | B5 | $8^1/_2$×11 | A4 |
| ON | A3 | $8^1/_2$×14 | $8^1/_2$×14 | $8^1/_2$×14 | $8^1/_2$×14 | $8^1/_2$×14 | B4 | 11×17 | A3 |

#### (b) Criterion (for China and countries using the metric)

Table1

| Original size sensor | | Main scanning width (mm) | | | | | | | | |
|---|---|---|---|---|---|---|---|---|---|---|
| /1 (PS204) | /2 (PS205) | 0 to 130.0 | Up to 153.0 | Up to 187.0 | Up to 200.0 | Up to 215.0 | Up to 225.0 | Up to 261.5 | Up to 275.0 | 275.1 or over |
| OFF | - | No original | A5S | B5S | 16K S | A4S | B5 | B5 | 16K | A4 |
| ON | - | A3 | FLS | FLS | FLS | FLS | FLS | B4 | 8K | A3 |

Table2

| Original size sensor | | Main scanning width (mm) | | | | | | | | | | | |
|---|---|---|---|---|---|---|---|---|---|---|---|---|---|
| /1 (PS204) | /2 (PS205) | 0 to 130.0 | Up to 143.9 | Up to 153.0 | Up to 187.0 | Up to 200.0 | Up to 213.0 | Up to 220.9 | Up to 225.0 | Up to 261.5 | Up to 274.7 | Up to 284.4 | 284.5 or over |
| OFF | OFF | No original | $5^1/_2$×$8^1/_2$S | A5S | B5S | 16K S | A4S | $8^1/_2$×11S | B5 | B5 | 16K | $8^1/_2$×11 | A4 |
| ON | OFF | A3 | FLS | FLS | FLS | FLS | FLS | FLS | FLS | B4 | 8K | 11×17 | A3 |
| OFF | ON | A3 | $8^1/_2$×14 | $8^1/_2$×14 | $8^1/_2$×14 | $8^1/_2$×14 | $8^1/_2$×14 | $8^1/_2$×14 | B4 | B4 | 8K | 11×17 | A3 |
| ON | ON | A3 | $8^1/_2$×14 | $8^1/_2$×14 | $8^1/_2$×14 | $8^1/_2$×14 | $8^1/_2$×14 | $8^1/_2$×14 | B4 | B4 | 8K | 11×17 | A3 |

#### (c) Criterion (for countries using inch)

Table1

| Original size sensor | | Main scanning width (mm) | | | |
|---|---|---|---|---|---|
| /1 (PS204) | /2 (PS205) | 0 to 130.0 | Up to 144.7 | Up to 220.9 | 221.0 or over |
| OFF | - | No original | $5^1/_2$×$8^1/_2$S | $8^1/_2$×11S | $8^1/_2$×11 |
| ON | - | 11×17 | $8^1/_2$×14 | $8^1/_2$×14 | 11×17 |

Table2

| Original size sensor | | Main scanning width (mm) | | | | | | | | | |
|---|---|---|---|---|---|---|---|---|---|---|---|
| /1 (PS204) | /2 (PS205) | 0 to 130.0 | Up to 143.9 | Up to 153.0 | Up to 187.0 | Up to 213.0 | Up to 220.9 | Up to 225.0 | Up to 262.0 | Up to 284.4 | 284.5 or over |
| OFF | OFF | No original | $5^1/_2$×$8^1/_2$S | A5S | B5S | A4S | $8^1/_2$×11S | B5 | B5 | $8^1/_2$×11 | A4 |
| ON | OFF | A3 | FLS | FLS | FLS | FLS | FLS | FLS | B4 | 11×17 | A3 |
| OFF | ON | A3 | $8^1/_2$×14 | $8^1/_2$×14 | $8^1/_2$×14 | $8^1/_2$×14 | $8^1/_2$×14 | B4 | B4 | 11×17 | A3 |

| | | | | | | | | | | | |
|---|---|---|---|---|---|---|---|---|---|---|---|
| OFF | ON | A3 | 8 1/2×14 | 8 1/2×14 | 8 1/2×14 | 8 1/2×14 | 8 1/2×14 | B4 | B4 | 11×17 | A3 |

### (3) Detection timing

- The size in the sub scanning (length) direction is determined by the states of the original size sensors when the angle sensor is activated from the deactivated state.
- Detection is made twice for the main scanning (width) direction, one when the angle sensor is activated and the other when the original cover sensor is activated.
- The original size is reset when the original cover sensor is deactivated from activated state as a result of the DF being raised.

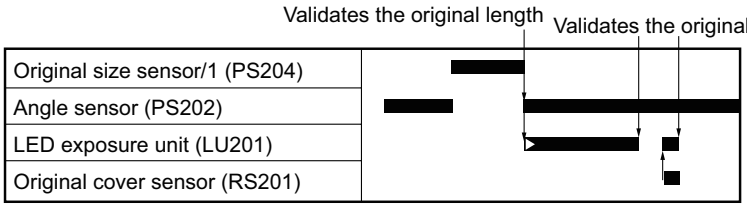


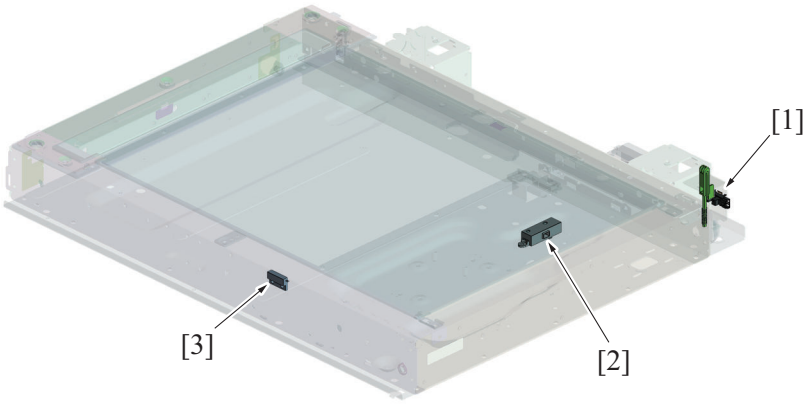


| | | | |
|---|---|---|---|
| [1] | Angle sensor (PS202) | [2] | Original size sensor/1 (PS204) |
| [3] | Original cover sensor (RS201) | - | - |

## 2.3.6 Image processing

The image processing has following items. For details, see “O.18.1 Scanner section image processing block diagram”.

### Scanner section image processing block diagram

- Photoelectric conversion
- Analog-to-digital conversion

# 3. WRITE SECTION (PH SECTION)

## 3.1 Configuration

PH unit



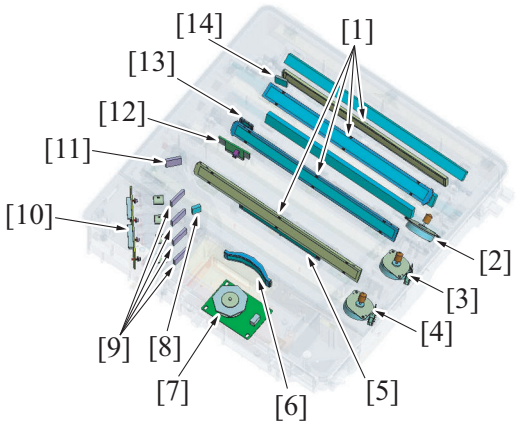


| | | | |
|---|---|---|---|
| [1] | G3 lens | [2] | Skew correction motor/C (M15) |
| [3] | Skew correction motor/M (M16) | [4] | Skew correction motor/Y (M17) |
| [5] | G2 lens | [6] | G1 lens |
| [7] | Polygon motor (M14) | [8] | Cylindrical lens |
| [9] | Synthetic mirror (Y,M,C,K) | [10] | Laser drive board (LDDB) |
| [11] | Return mirror (light source) | [12] | Index board (INDEXB) |
| [13] | Index lens | [14] | Index mirror |

## 3.2 Operation

### 3.2.1 Outline

- The surface of the photo conductor is irradiated with a laser light and an electrostatic latent image is thereby formed.
- The PH unit has a four color exposure unit single-piece configuration. A semiconductor laser is provided for each of four different colors. A single polygon motor is used to make a scan.
- The polygon mirror has seven faces.
- A rotating polygon mirror is irradiated with a laser light emitted from the laser diode on the laser drive board to let the laser light scan.

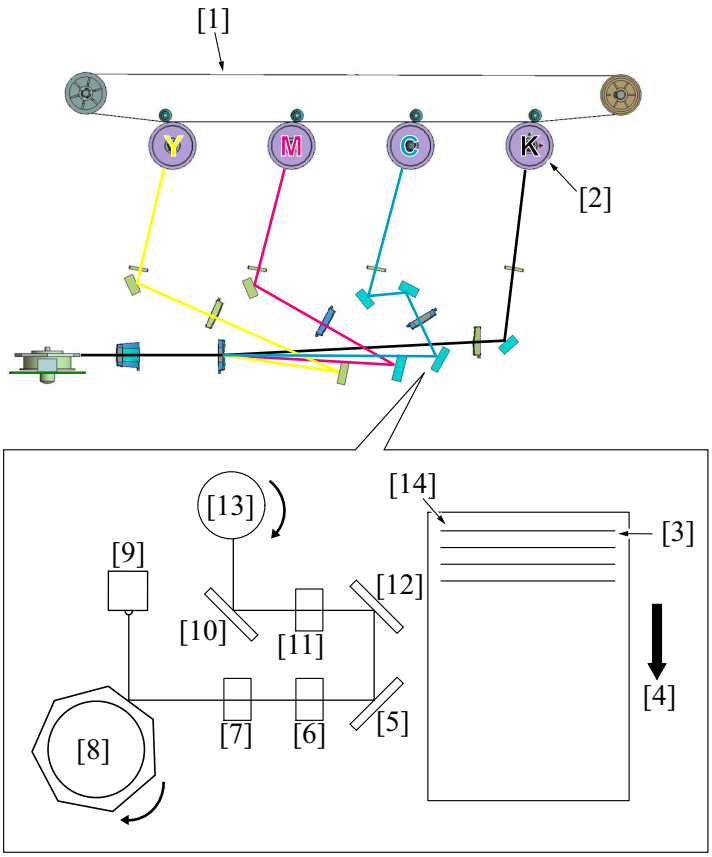


| | | | |
|---|---|---|---|
| [1] | Transfer belt | [2] | Photo conductor K |
| [3] | One line, One scan | [4] | Photo conductor rotation direction |
| [5] | Return mirror/1 | [6] | G2 lens |
| [7] | G1 lens | [8] | Polygon mirror |
| [9] | Laser diode | [10] | Return mirror/3 |
| [11] | G3 lens | [12] | Return mirror/2 |
| [13] | Photo conductor | [14] | Beam |

### 3.2.2 Laser exposure process

1. The laser light of each color enters the cylindrical lens via the synthetic mirror and return mirror (light source).
2. At the cylindrical lens, each laser light is condensed in the vicinity of the polygon mirror.
3. Since the angle of incidence for each color of laser light varies, the laser light reflected by the polygon mirror is reflected in a different angle for each color.
4. The condensing angle of each color of laser light is corrected by the G1 and G2 lenses and then reaches each return mirror.
5. The K laser light is condensed on the photo conductor surface via the G3 lens and return mirror/1. The Y laser light is condensed on the photo conductor surface via the return mirror/1, G3 lens, and return mirror/2. The M laser light is condensed on the photo conductor surface via the return mirror/1, G3 lens, and return mirror/2. The C laser light is condensed on the photo conductor surface via the return mirror/1, G3 lens, return mirror/2, and return mirror/3.

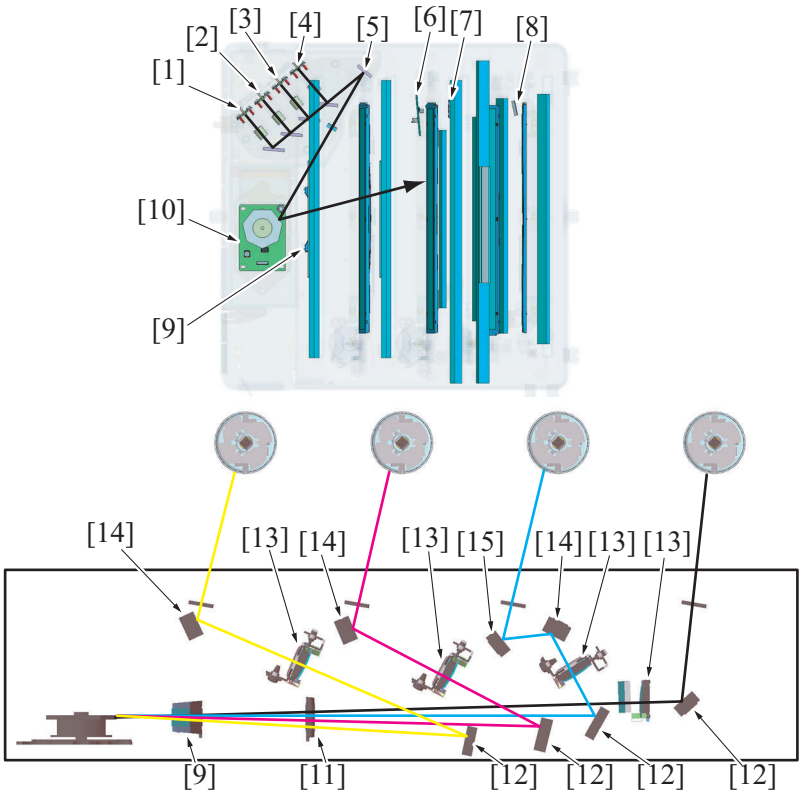


| | | | |
|---|---|---|---|
| [1] | Laser diode/K (LD/K) | [2] | Laser diode/C (LD/C) |
| [3] | Laser diode/M (LD/M) | [4] | Laser diode/Y (LD/Y) |
| [5] | Return mirror (light source) | [6] | Index board (INDEXB) |
| [7] | Index lens | [8] | Index mirror |
| [9] | G1 lens | [10] | Polygon motor (M14) |
| [11] | G2 lens | [12] | Return mirror/1 |
| [13] | G3 lens | [14] | Return mirror/2 |
| [15] | Return mirror/3 | - | - |

### 3.2.3 Laser emission timing

- After a print cycle has been started, when the stable rotation signals of photo conductor and polygon motor are detected, a laser ON signal is output from the MFP board.
- The laser ON signal causes each laser diode to turn ON and emit a laser beam.
- After passing through the return mirror (light source), cylindrical lens, polygon mirror, G1 lens, G2 lens, index mirror, and index lens, the K laser light is applied to the index board. This generates an index signal.
- This index signal has a function of keeping the same laser light emission timing per every one line in the main scanning direction.
- The index signal is generated with the K laser light only. The laser light emission timing for other colors is determined with reference to K.
- If the index signal is not detected within a predetermined period of time, the machine determines that it is a laser emission fault, displaying “trouble code: C4501 laser malfunction”.
- The machine continuously monitors the index signal. If the index signal cannot be detected at regular intervals, the machine determines that it is a laser emission fault, displaying “trouble code: C4501 laser malfunction”.

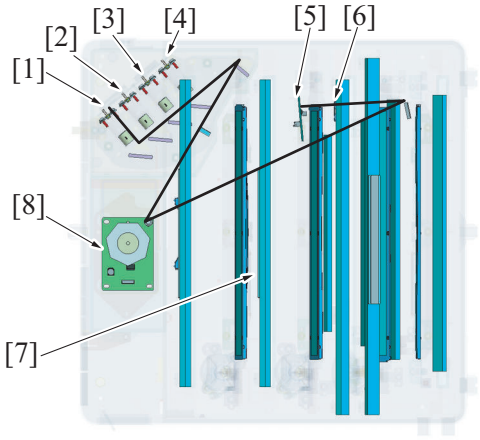


| | | | |
|---|---|---|---|
| [1] | Laser diode/K (LD/K) | [2] | Laser diode/C (LD/C) |
| [3] | Laser diode/M (LD/M) | [4] | Laser diode/Y (LD/Y) |
| [5] | Index board (INDEXB) | [6] | Index lens |

| | | | |
|---|---|---|---|
| [7] | G2 lens | [8] | Polygon motor (M14) |

### 3.2.4 Laser emission stop

Emission of the laser beam is stopped if any of the following conditions is encountered during printing:

- End of a print job
- Laser emission of Y, M, and C is stopped if the print mode is changed from color to black during printing.
- The front door or any other door is opened.
- A misfeed occurs.
- A malfunction occurs.

### 3.2.5 Laser emission area

#### (1) Main scanning direction

- The print start position in the main scanning direction is determined by the main scanning print start signal (/HSYNC) that is output from the MFP board and the width of the paper.
- The laser emission area is determined by the paper size. The area of 3 mm/0.118 inch on both edges of the paper is, however, the void image area.

#### (2) Sub scanning direction

- The print start position in the sub scanning direction is determined with the image write signal (/TOD) that is output from the MFP board. Also, it is determined with the system speed.
- The laser emission area is determined by the paper size. However, there are void areas that are 4.2 mm/0.165 inch from the leading edge and 3 mm/0.118 inch from the trailing edge of paper. (With the thin paper, the area of 4.2 mm/0.165 inch from the leading edge of paper is the void image area.)

| Modes | Void image area | |
|---|---|---|
| | Main scanning direction | Sub scanning direction |
| Copy | 3 mm (1/8 inches) from the edge of the paper | 4.2 mm (3/16 inches) from the leading edge of the paper |
| | 3 mm (1/8 inches) from the edge of the paper | 3 mm (1/8 inches) from the trailing edge of the paper |
| PC Print | 4.2 mm (3/16 inches) from the edge of the paper | 4.2 mm (3/16 inches) from the leading edge of the paper |
| | 4.2 mm (3/16 inches) from the edge of the paper | 4.2 mm (3/16 inches) from the trailing edge of the paper |

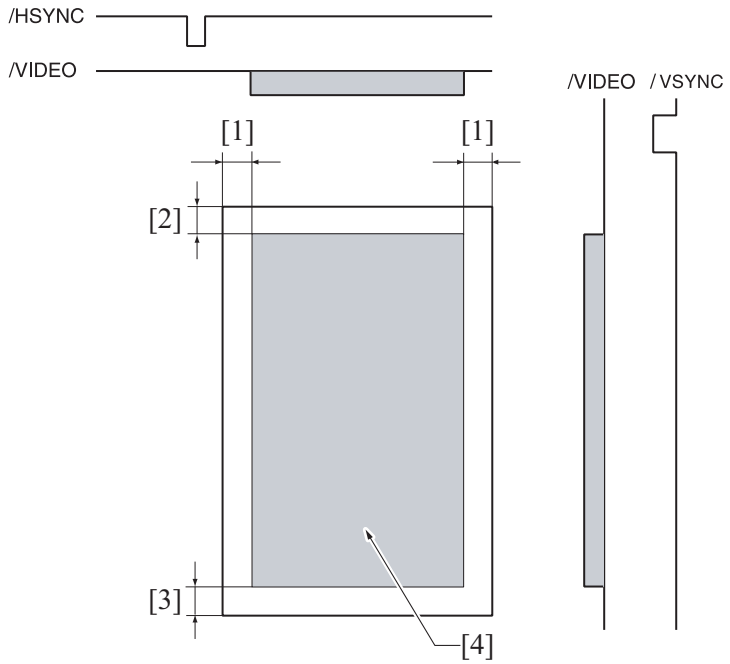


| | | | |
|---|---|---|---|
| [1] | Void image area at edge of paper | [2] | Void image area at leading edge of paper |
| [3] | Void image area at trailing edge of paper | [4] | Laser emission area |

### 3.2.6 Color registration control (color shift correction) system

#### (1) Overview of the registration control

- In a tandem engine, each four different color has an independent image reproduction process. Color shift may occur because of variations in part accuracy. The color registration control system automatically detects color shift and correct color shift in the main and sub scanning directions.
- The color shift detection sequence proceeds as follows. A pattern each is produced at the front and rear on the transfer belt. Each of IDC sensors at the front and rear reads the corresponding pattern. The amount of color shift in each of the sub scanning and main scanning directions is then calculated and stored in memory.

- The amount of color shift in the sub scanning direction is read from the pattern falling within the sub scanning detection range. That in the main scanning direction is read from the entire pattern.
- From data readings, the machine calculates how much the position of each of the different colors should be corrected. Based on the calculated data, the machine controls each dot during image output, thereby correcting the color shift amount.

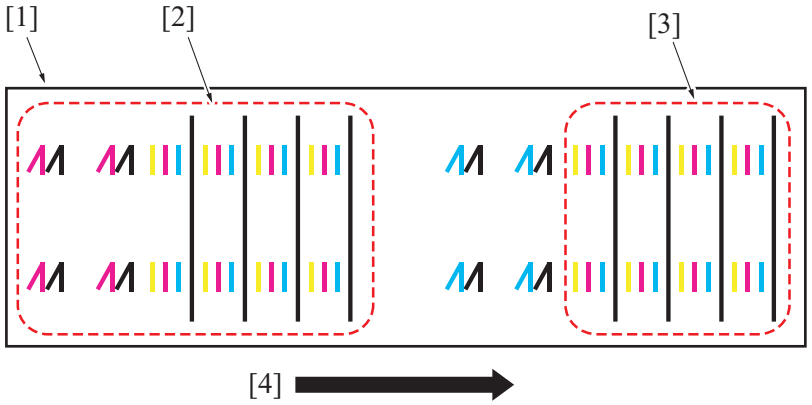


| | | | |
|---|---|---|---|
| [1] | Transfer belt | [2] | Detection area for main scanning direction |
| [3] | Detection area for sub scanning direction | [4] | Movement direction of the transfer belt |

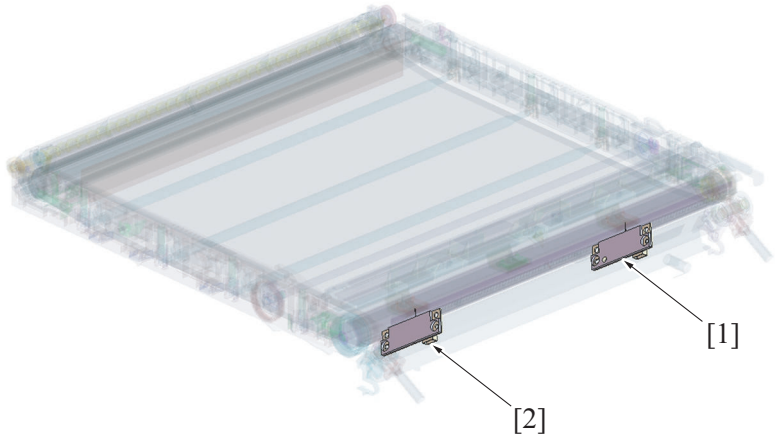


| | | | |
|---|---|---|---|
| [1] | IDC sensor/Rr (IDCS/Rr) | [2] | IDC sensor/Fr (IDCS/Fr) |

### (2) Types of color shift

- Color shift is misalignment of the images of three different colors, yellow (Y), magenta (M), and cyan (C), with respect to the image of black (K).
- Four different types of color shift can occur: color shift in the main scan direction, color shift due to overall scaling error in the main scan direction, color shift in the sub scan direction, and image skew.

### (3) Correction of color shift in the main scan direction

- If the image of each color (Y, M, C) is misaligned with respect to the image of black (K) in the main scan direction, changing the write start timing in the main scan direction can correct the color shift. Color shift correction needs to be performed separately for the respective colors (Y, M, C).
- Color shift correction control is activated when the image stabilization sequence is started.

* When the image of magenta is misaligned with respect to the image of black (K) in the sub scan direction

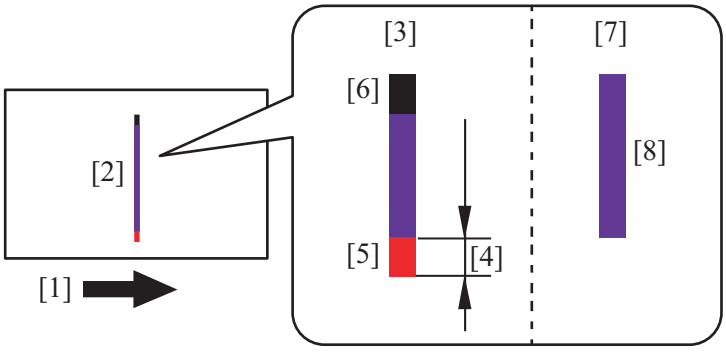


| | | | |
|---|---|---|---|
| [1] | Rotational direction of the transfer belt | [2] | Transfer belt |

| | | | |
|---|---|---|---|
| [3] | Before correction | [4] | Color shift |
| [5] | Magenta (M) | [6] | Black (K) |
| [7] | After correction | [8] | No color shift |

### (4) Correction of color shift due to overall scaling error in the main scan direction

- If the image of each color (Y, M, C) and the image of black (K) vary in length in the main scan direction, changing the clock frequency of the laser diode can correct the length difference in the main scan direction. Color shift correction needs to be performed separately for the respective colors (Y, M, C).
- Color shift correction control is activated when the image stabilization sequence is started.

* When the image of magenta is longer than the image of black (K)

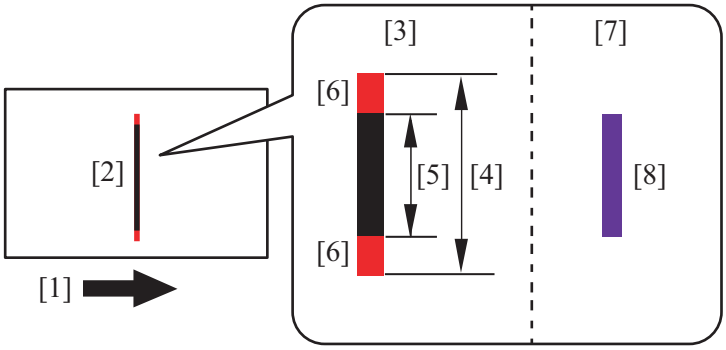


| | | | |
|---|---|---|---|
| [1] | Rotational direction of the transfer belt | [2] | Transfer belt |
| [3] | Before correction | [4] | Magenta (M) |
| [5] | Black (K) | [6] | Color shift |
| [7] | After correction | [8] | No color shift |

### (5) Correction of color shift in the sub scan direction

- If the image of each color (Y, M, C) is misaligned with respect to the image of black (K) in the sub scan direction, changing the write start timing in the sub scan direction can correct the color shift. Color shift correction needs to be performed separately for the respective colors (Y, M, C).
- Color shift correction control is activated when the image stabilization sequence is started.

* When the image of magenta is misaligned with respect to the image of black (K) in the sub scan direction

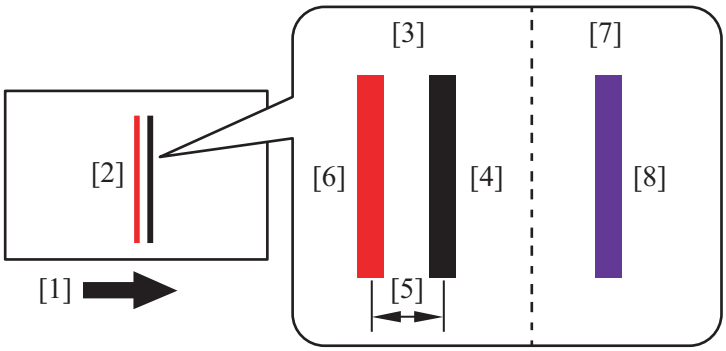


| | | | |
|---|---|---|---|
| [1] | Rotational direction of the transfer belt | [2] | Transfer belt |
| [3] | Before correction | [4] | Black (K) |
| [5] | Color shift | [6] | Magenta (M) |
| [7] | After correction | [8] | No color shift |

### (6) Skew (image skew)

- If the image of each color (Y, M, C) is tilted against the image of black (K) in the sub scanning direction, the image skew can be corrected by tilting the G3 lens of the print head unit. Image skew correction needs to be performed separately for the respective colors (Y, M, C).
- Image skew is adjusted at timing when the image stabilization sequence is started.

* When the image of magenta is tilted against the image of black (K)

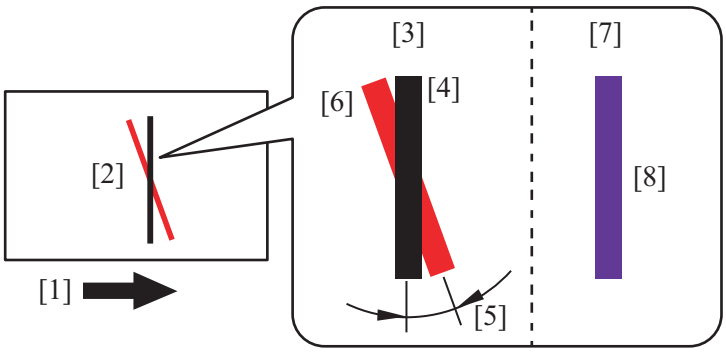


| | | | |
|---|---|---|---|
| [1] | Rotational direction of the transfer belt | [2] | Transfer belt |
| [3] | Before correction | [4] | Black (K) |
| [5] | Color shift | [6] | Magenta (M) |
| [7] | After correction | [8] | No color shift |

### 3.2.7 Color skew correction control

- Temperature may change inside the print head unit and the components can change over time. This may cause color skew problems. To prevent the problems, individual G3 lenses that correspond to Y, M, and C respectively have a color skew auto adjustment mechanism.
- When the skew correction motor runs, the G3 lenses moves up and down to perform an automatic color skew correction.

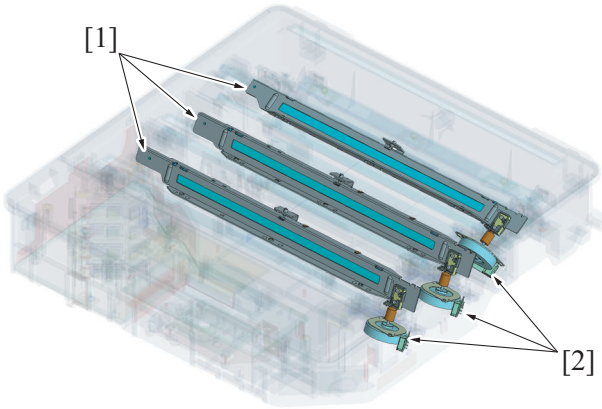


| | | | |
|---|---|---|---|
| [1] | G3 lens | [2] | Skew correction motor |

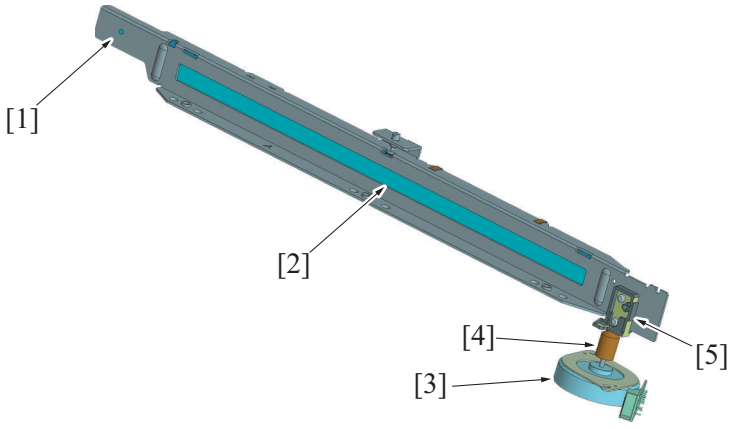


| | | | |
|---|---|---|---|
| [1] | G3 lens tilting shaft | [2] | G3 lens: The lens is tilted to correct color skew. |
| [3] | Skew correction motor | [4] | Drive gear |
| [5] | G3 lens drive cam | - | - |

#### (1) Skew adjustment method

- The following describe the direction in which the beam moves by the skew correction motors.
- When the skew correction motors rotates, the G3 lens moves in the direction of the arrow that is illustrated below, so that the beam moves.
- Only cyan uses a greater number of turnover mirrors, one more than yellow or magenta does, which results in the direction in which the beam moves being different from that of yellow and magenta.

Skew adjustment direction: Direction in which the beam moves when the skew correction motor/Y, M, C rotates clockwise

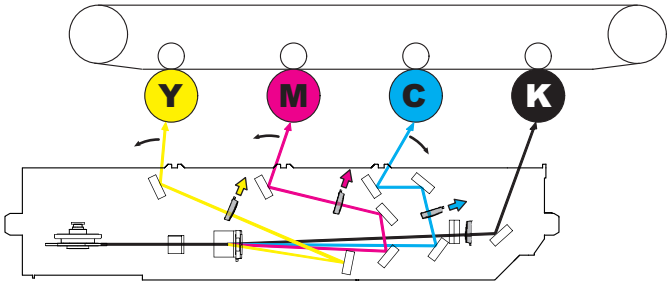


### (2) Skew correction motor adjustment value panel display

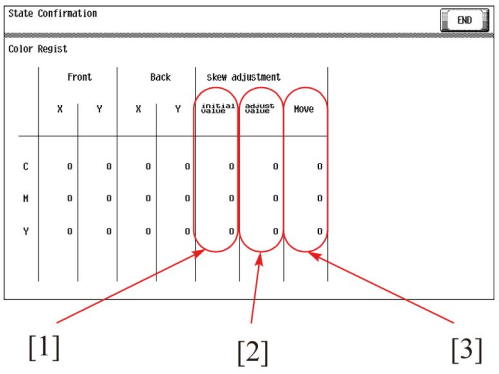


| | | | |
|---|---|---|---|
| [1] | Select [Service Mode] -> [Machine] -> [Print Head Skew Adj.] and call [Adjust value] (default adjustment value unique to the print head) to the screen, in steps. | [2] | Shows the skew correction value after the image stabilization process, in steps. |
| [3] | Shows the skew correction value after the image stabilization process relative to that of the last image stabilization process, in steps. | - | - |

### (3) Operation timing

- The color registration control (color shift correction) and the color skew correction control operate at one time.
- The color skew amount is calculated for each color using the numeric value calculated with the sub scanning registration pattern detected and based on the previous correction data.

## 3.2.8 Skew adjustment/skew adjustment reset

- There are cases where the “color skew correction control” cannot be executed for some reason.
  The machine provides functions that allow you to reset the “skew adjustment data” against these situations.
- For details of the Service Mode, see “I.5.4.9 Print Head Skew Adj..”

### (1) Possible conditions and causes

- The print head unit is replaced with a new one.
- The alarm code “P-14: skew correction trouble” is displayed.
- A door is opened or the main power switch is turned OFF during color skew correction control, causing the skew correction sequence to be halted; as a result, the current position of the skew correction motor is unknown.
- The backup position information of the skew adjustment motor settings in the machine is lost operations such as replacement of the SSD board.

## 3.2.9 PH unit temperature detection control

- The temperature inside the PH unit is measured at intervals of 30 sec. by the PH temperature sensor mounted in the PH unit.
- The detected temperature data is recorded to form part of the environmental information data and used for controlling, for example, color registration, 1st transfer output determination, and transfer roller cleaning.

## 3.2.10 PH window cleaning

- The PH window, if contaminated, blocks the path of the laser beam and the surface of the photo conductor can no longer be exposed properly. This could result in image problems, including white bands or white lines on the print image.
- The PH window is provided with a cleaning guide that prevents any image problem caused by a dirty PH window from occurring.

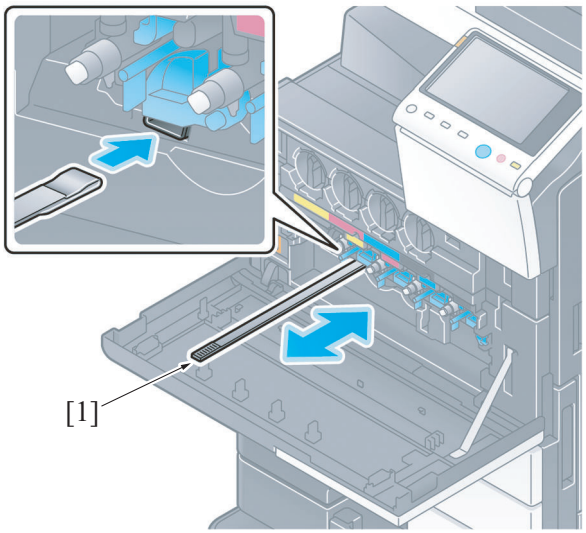


| | | | |
|---|---|---|---|
| [1] | PH window cleaning tool | - | - |

#### (1) PH window cleaning procedures

- Slowly pull to the front the PH window cleaning tool and push it back into the original position. This allows the cleaning material mounted on the PH window cleaning tool to remove any foreign matter from the surface of the PH window.
- The machine is not equipped with any mechanism that automatically cleans the PH window. This makes it necessary to clean the PH window manually at regular intervals.

#### (2) PH window cleaning timing

- Clean the PH window of each color when the drum unit/K is replaced with a new one.

### 3.2.11 Image processing

The following image processing procedures relating to the write section are available. For details, see “O.18.1 Scanner section image processing block diagram”.

#### (1) Write section image processing block diagram

- Resolution conversion processing in the main scanning direction/movement processing
- Resolution conversion processing in the sub scanning direction
- Main scanning position correction
  Speed conversion
  Modulation

# 4. PHOTO CONDUCTOR SECTION

## 4.1 Configuration

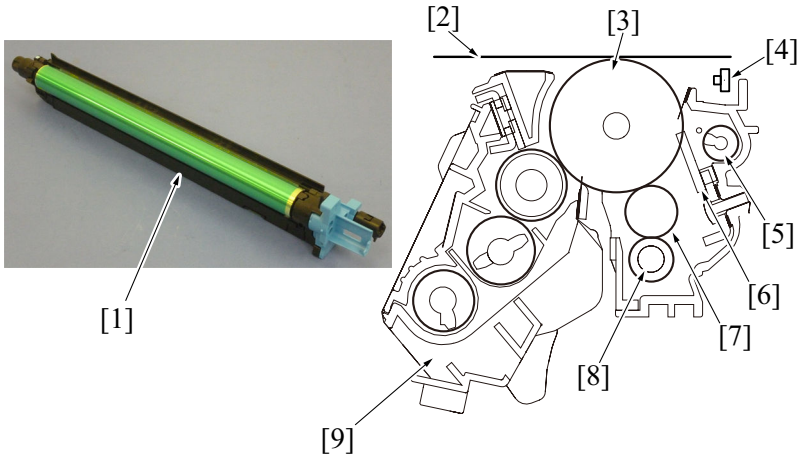


| | | | |
|---|---|---|---|
| [1] | Drum unit | [2] | Transfer belt |
| [3] | Photo conductor | [4] | Erase LED |
| [5] | Toner collecting screw | [6] | Cleaning blade |
| [7] | Charging roller | [8] | Cleaning roller |
| [9] | Developing unit | - | - |

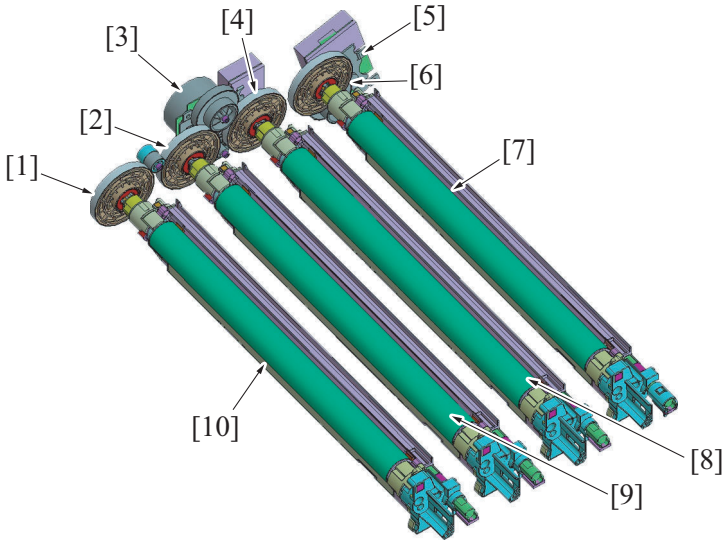


| | | | |
|---|---|---|---|
| [1] | Color PC drive gear/Y | [2] | Color PC drive gear/M |
| [3] | PC motor (M2) | [4] | Color PC drive gear/C |
| [5] | Transport motor (M1) | [6] | PC drive gear/K |
| [7] | Drum unit/K | [8] | Drum unit/C |
| [9] | Drum unit/M | [10] | Drum unit/Y |

## 4.2 Drive

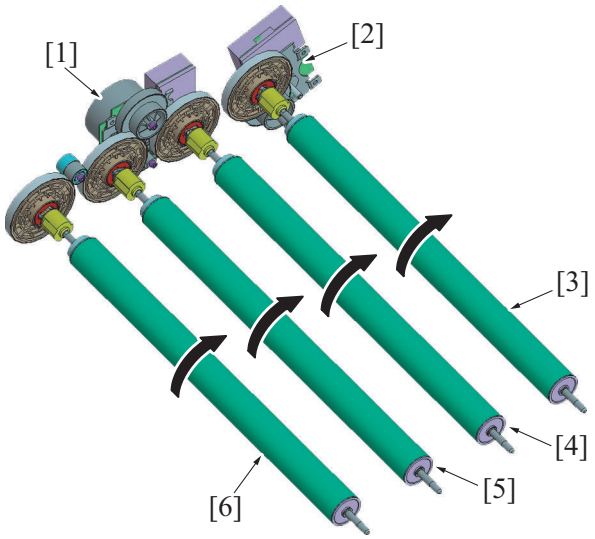


| | | | |
|---|---|---|---|
| [1] | PC motor (M2) | [2] | Transport motor (M1) |
| [3] | Photo conductor/K | [4] | Photo conductor/C |
| [5] | Photo conductor/M | [6] | Photo conductor/Y |

## 4.3 Operation

### 4.3.1 Photo conductor drive mechanism

- Two independent photo conductor motors (for color and black) are used for the drive mechanism to suppress incorrect color registration and uneven pitch.

#### (1) Photo conductor/K drive mechanism

- The transport motor drives the photo conductor/K.
- The transport motor is the common source that provides drive to manual bypass feed, tray feed, registration roller, transfer belt, and others.
- Drive is transmitted to the photo conductor when the triangular-prism-shaped shaft is engaged with the mating coupling part.

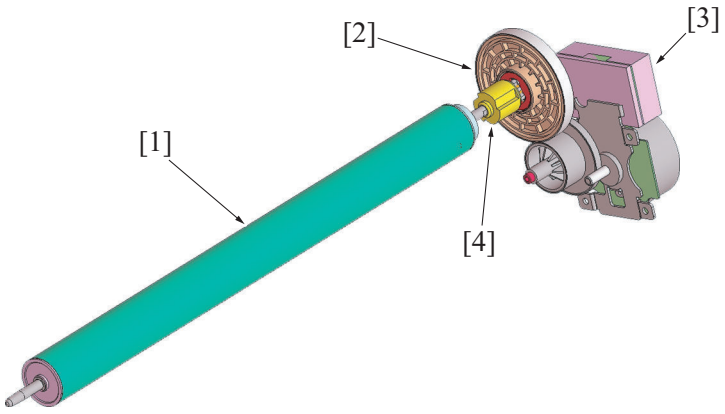


| | | | |
|---|---|---|---|
| [1] | Photo conductor/K | [2] | Photo conductor drive gear/K |
| [3] | Transport motor (M1) | [4] | Coupling |

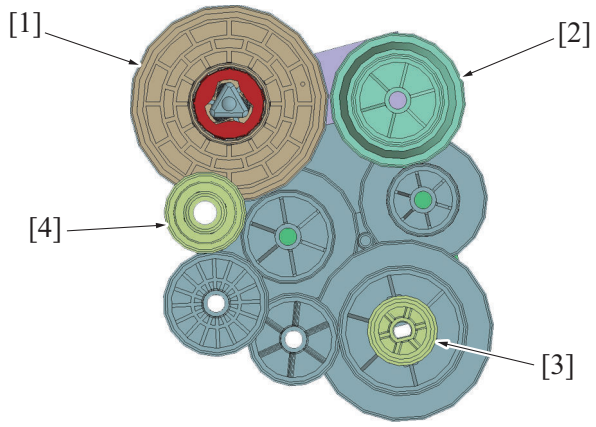


| | | | |
|---|---|---|---|
| [1] | Photo conductor drive gear/K | [2] | Transfer belt drive gear |
| [3] | Registration roller drive gear | [4] | Developing unit drive gear |

### (2) Photo conductor/Y, M, C drive mechanism

- The photo conductors/Y, M, C are driven by the PC motor.
- Drive is transmitted to each of the photo conductors when the triangular-prism-shaped shaft is engaged with the mating coupling part.

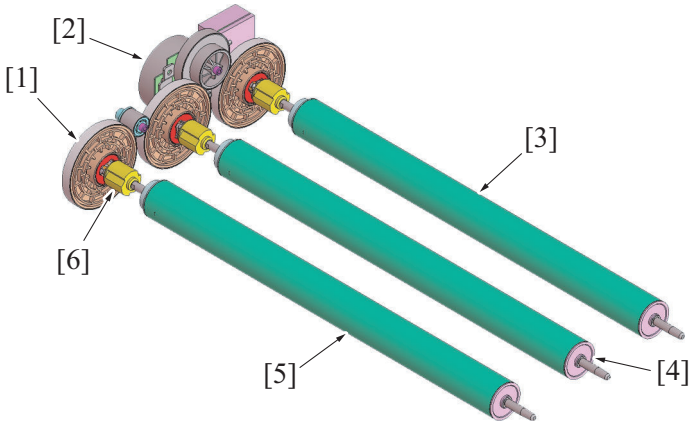


| | | | |
|---|---|---|---|
| [1] | Color photo conductor drive gear/Y | [2] | PC motor (M2) |
| [3] | Photo conductor/C | [4] | Photo conductor/M |
| [5] | Photo conductor/Y | [6] | Coupling |

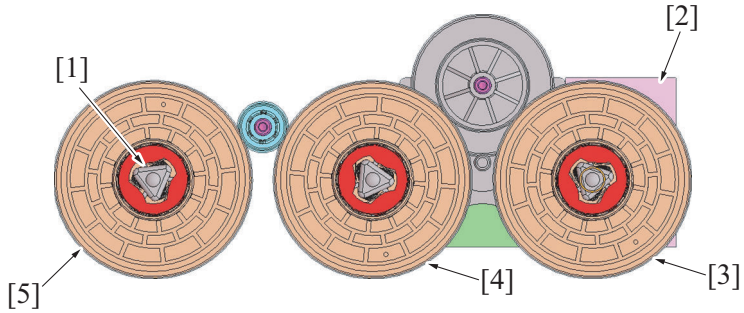


| | | | |
|---|---|---|---|
| [1] | Triangular-prism-shaped coupling part | [2] | PC motor (M2) |
| [3] | Color photo conductor drive gear/C | [4] | Color photo conductor drive gear/M |
| [5] | Color photo conductor drive gear/Y | - | - |

## 4.3.2 Erase LED control

- The toner image on the photo conductor is transferred to the transfer belt. (1st transfer)
  The potential left on the photo conductor after the toner image is transferred is neutralized by turning ON the erase LED and any potential left on the surface of the photo conductor is neutralized.
- The neutralization of any residual potential on the photo conductor helps improve cleaning performance of toner left on the surface of the photo conductor.

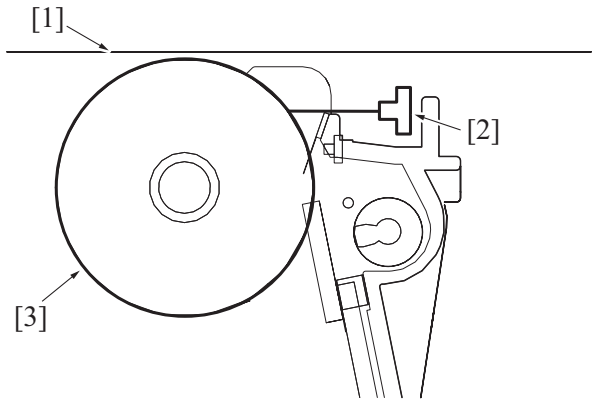


| | | | |
|---|---|---|---|
| [1] | Transfer belt | [2] | Erase LED |
| [3] | Photo conductor | - | - |

#### (1) Erase LED ON timing

- The erase LED is turned ON when the photo conductor starts rotating.

#### (2) Erase LED OFF timing

- The erase LED is turned OFF after the lapse of a predetermined period of time after the corona charge output has been shut down. (That is, the erase lamp is turned OFF after all charge left on the surface of the photo conductor is neutralized.)

### 4.3.3 Photo conductor cleaning

- The toner image on the photo conductor is transferred to the transfer belt. (1st transfer)
  Part of the toner image that is not transferred is left on the surface of the photo conductor. The residual toner is scraped off by the cleaning blade.
- Toner, which has been scraped off the surface of the photo conductor, is conveyed by the toner collecting screw toward to the front of the machine. It is discharged in the waste toner box.
- The waste toner collected in the waste toner box is disposed of when a waste toner box which is detected to be full of waste toner is replaced with a new one and the used waste toner box is discarded.

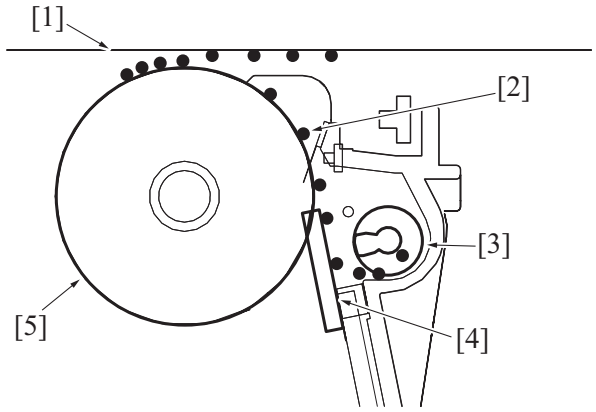


| | | | |
|---|---|---|---|
| [1] | Transfer belt | [2] | Waste toner |
| [3] | Toner collecting screw | [4] | Cleaning blade |
| [5] | Photo conductor | - | - |

#### (1) Cleaning blade

- The cleaning blade is pressed up against the surface of the photo conductor at all times. No cleaning blade retraction mechanism is provided.
- The cleaning blade scrapes residual toner off the surface of the photo conductor as the photo conductor is rotated.
- The toner collecting screw conveys the toner scraped off the surface of the photo conductor.

#### (2) Toner conveyance/collection mechanism

- The toner collecting screw is rotated by the driving force transmitted from the photo conductor. (The toner collecting screw rotates in time with the rotation of the photo conductor.)
- Rotation of the toner collecting screw conveys toner scraped off the surface of the photo conductor toward the front of the machine.
- The toner conveyed to the front of the machine is discharged via the toner collecting port into the waste toner box.
- The toner collecting port is provided with a shutter mechanism.
  Mounting the waste toner box pushes the shutter at the toner collecting port, opening the toner collecting port. The shutter is closed by the waste toner box removal and prevents the toner spilling from the toner collecting port.

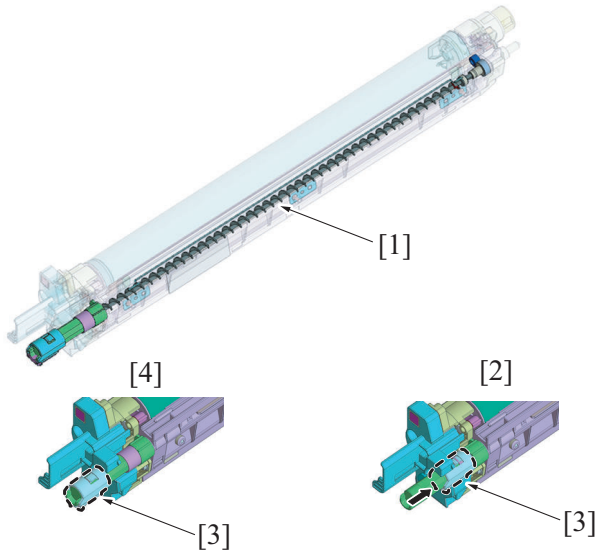


| | | | |
|---|---|---|---|
| [1] | Toner collecting screw | [2] | Shutter open |
| [3] | Shutter | [4] | Shutter close |

### 4.3.4 Electrostatic charger control

- A charging roller is used in the electrostatic charger.
- The charging roller does not apply high voltages in comparison to a comb electrode and generates no ozone, so that no ozone filter is mounted.

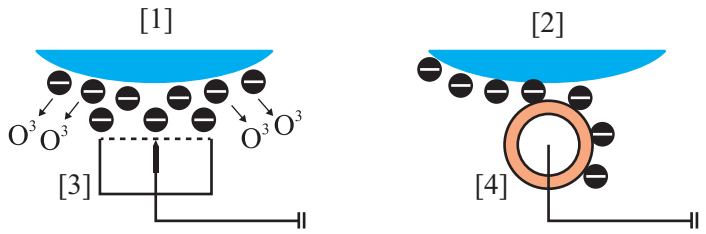


| | | | |
|---|---|---|---|
| [1] | Comb electrode charge | [2] | Roller charging |
| [3] | Comb electrode | [4] | Charging roller |

#### (1) Charge application start timing

- Charge is applied to the electrostatic charger application terminal when the photo conductor (transport motor and PC motor) drive motor starts rotating at a steady speed.

#### (2) Charge application end timing

- Application of the charge to the electrostatic charger application terminal is terminated when the surface of the photo conductor which faces the transfer belt as the 1st transfer output is turned OFF moves past the charging position.

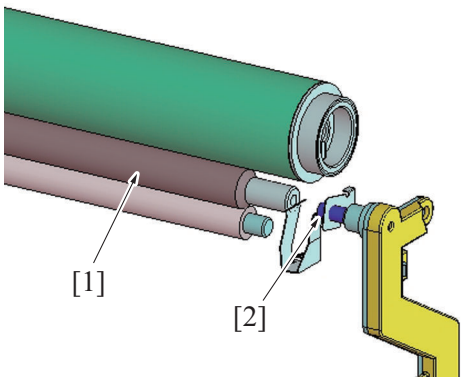


| | | | |
|---|---|---|---|
| [1] | Charging roller | [2] | Electrostatic charger application terminal |

### 4.3.5 Charging roller cleaning

- If the charging roller becomes contaminated, the surface of the photo conductor can no longer be charged uniformly, so that uneven charge occurs. Uneven charge of the photo conductor results in irregular streaks or other print image defects.
- The cleaning roller rotates by following the rotation of the charging roller, continuously cleaning contamination from the charging roller surface.

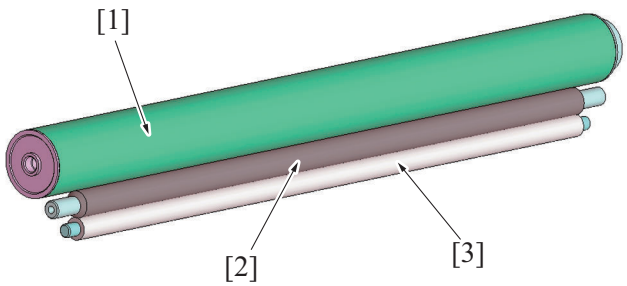


| | | | |
|---|---|---|---|
| [1] | Photo conductor | [2] | Charging roller |
| [3] | Cleaning roller | - | - |

### 4.3.6 Drum unit detection

The drum unit of each color of toner is provided with a DC set board. The board detects set of the corresponding drum unit.

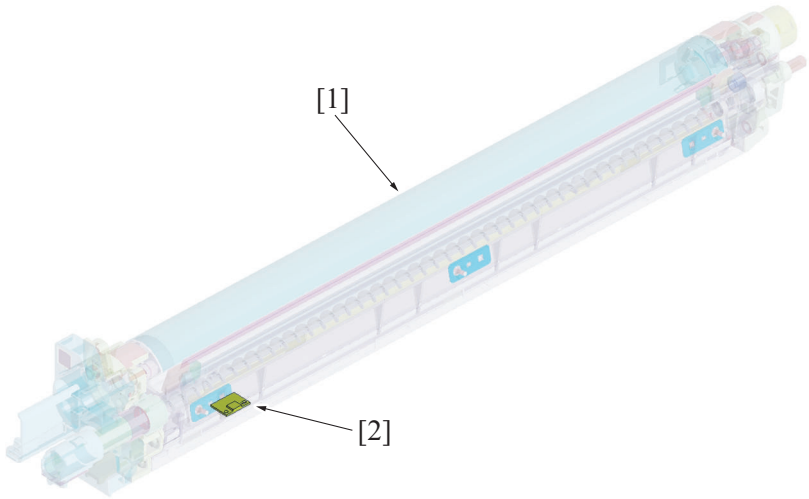


| | | | |
|---|---|---|---|
| [1] | Drum unit | [2] | DC set board |

#### (1) Unit mounting detection

##### (a) Detection timing

- The unit mounting detection control is performed under any of the following conditions:
  “The power switch is turned ON (with the front door and right door are closed)”
  “The front door or right door is opened and closed with the power switch in ON position”

##### (b) Operation when it is detected that no units are mounted

- The message “Drum Unit Installation Error” appears on the control panel and the machine prohibits initiation of any new print cycle.
  The message “Drum Unit Installation Error” disappears as soon as a drum unit is mounted.

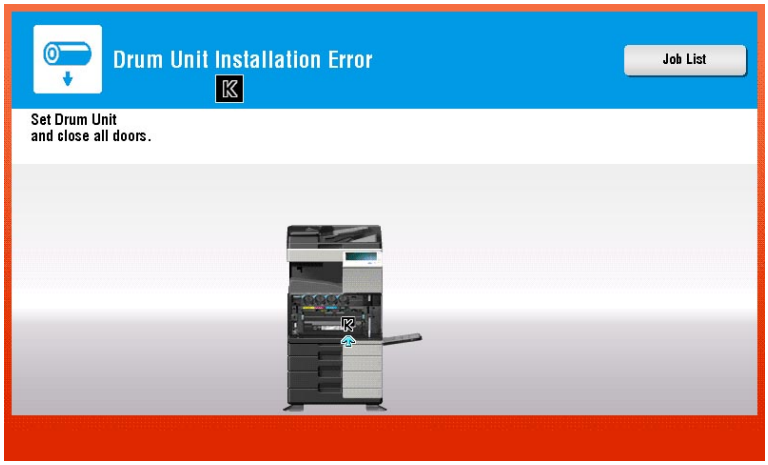


### (2) New article detection

#### (a) Detection timing

- The new article detection control is performed if it is determined through the “unit mounting detection” control that the drum unit is correctly mounted in place.

#### (b) Operation when the drum unit is determined not to be new

- The new article detection control is terminated.

#### (c) Operation when the drum unit is determined to be new

- The life counter of the drum unit is reset to zero and the control proceeds to the life detection control.
- The result of the new article detection is recorded in the eMMC board of the main body.
- The life counter is available for the drum unit of each color. The counter value is recorded in the eMMC board of the main body.

### (3) New article detection-disabled mode

- No new article detection control is performed for the drum unit when the new article detection-disabled mode is used.
- The new article detection-disabled mode should be used only for troubleshooting purposes.

**NOTE**

- **See “I.7.3.9 Engine FW DipSW” for more detailed operating precautions.**

## 4.3.7 Drum unit life detection

**NOTE**

- **On this machine, [Display] is specified by default for the near life or life display.**
- **[Off] is specified by default for the life stop display, when the life stop is reached this machine does not stop and printing is possible.**
- **To confirm the life of each unit from the Life value of consumables and parts, and from [Service Mode] -> [Counter] -> [Life].**

### (1) Counter life determination

- Each of the printed counter and the drum rotation time counter has its own threshold value to determine its own life. If the printed counter or drum rotate time counter value reaches the threshold, the machine determines that the drum unit has reached a new state.

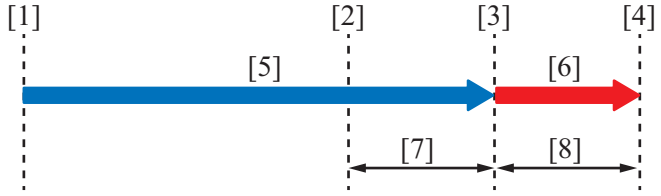


| | | | |
|---|---|---|---|
| [1] | New article (starts to be used) | [2] | Near life display |
| [3] | Life display | [4] | Life stop display |
| [5] | Image guaranteed range | [6] | Outside image guaranteed range |
| [7] | Near life display period | [8] | Life display period |

### (2) Near life detection

- The near life has been reached when either the print counter or drum rotation time counter has reached the near life threshold value.

#### (a) Near life display setting

- [Display] is specified by default for the near life display.
- When CS Remote Care is connected, the connection destination is notified irrespective of whether the display is Display/Do Not Display.
  When CS Remote Care is not connected, specify the near life reach display as necessary.

### (b) Near life display timing

- The near life timing specifies whether to display the near life on the estimated life end date that is specified in Check Consumables List as start.
  Specify with settings of [Service Mode] -> [System 2] -> [Unit Change] -> [Warning display] -> [Pre-Near Life Display Setting].
  Print the Check Consumables List with settings of [Utility] -> [Check Consumables List] -> [Print List].
  The estimated life end date calculates and displays the predicted end date when the remaining use amount of the consumable part reaches 30 %.

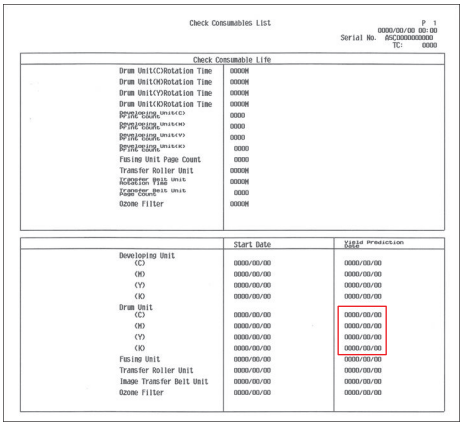


NOTICE
- When the near life display timing is specified to [+6], the near life is displayed 6 months before the estimated life end date. When it is specified to [0], the near life is not displayed.

## (3) Life detection

- The life has been reached when either the print counter or drum rotation time counter has reached the life threshold value.

### (a) Life display setting

On this machine, since the life display is specified to [Display] by default, a display appears when the life is reached.
Configure the reaching life display settings as necessary. [Service Mode] -> [System 2] -> [Unit Change] -> [Near Life Display Settings]

## (4) Life stop detection

The life is stopped when either the print counter value or the drum rotation time counter value has reached the life stop threshold value.

### (a) Life stop display setting

- On this machine, since the life warning display and the life stop are specified to [Off] by default, a warning display does not appear and the print job does not stop even when the life is reached.
  Configure the life stop settings as necessary. [Service Mode] -> [Enhanced Security] -> [Life Stop Setting]

### (b) Life stop display

- When it reached the life stop, and the life display is specified to [On] with the life stop display settings, the life warning appears and the print job is prohibited.

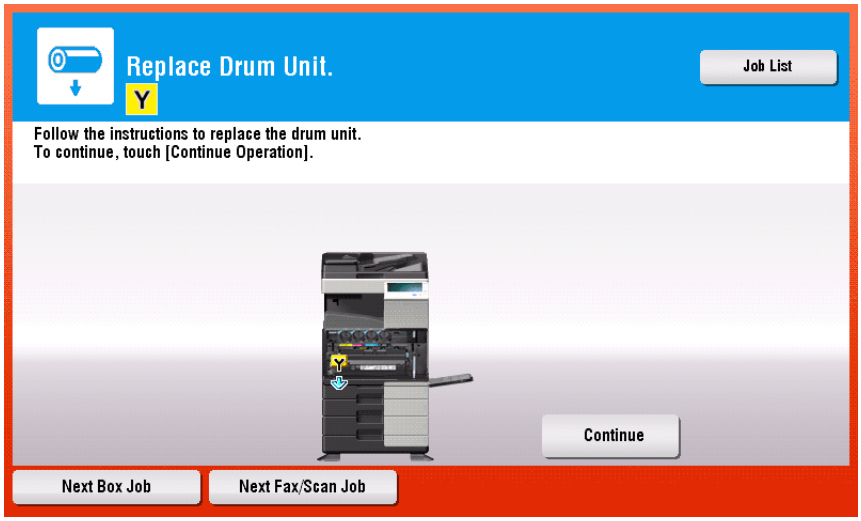


**NOTE**
- **When the color drum unit reaches its life and a print job is disabled, touching the [Continue] key allows the print job to be restarted in black.**
- **The life stop screen differ from the screen that “User” is selected on System2/Unit Change in Service Mode.**

### 4.3.8 Number of field standard printed pages

- The number of field standard printed pages is specified for this machine based on calculation made by assuming field standard job modes as determined using the print volume and use conditions of the user. Note, however, that the number of printed pages of the drum unit varies depending on how the user uses the machine.
- For details, see “F.5.1 Life value of consumables and parts”.

# 5. DEVELOPING SECTION

## 5.1 Configuration

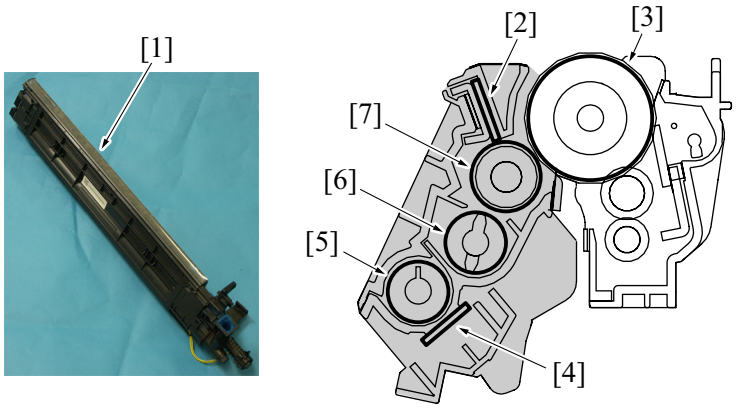


| | | | |
|---|---|---|---|
| [1] | Developing unit | [2] | Doctor blade |
| [3] | Photo conductor | [4] | TCR sensor |
| [5] | Toner supply screw 1 | [6] | Toner supply screw 2 |
| [7] | Developing roller | - | - |

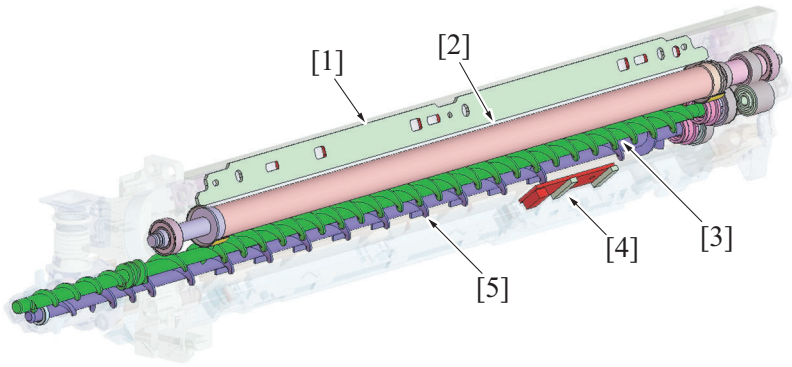


| | | | |
|---|---|---|---|
| [1] | Doctor blade | [2] | Developing roller |
| [3] | Toner supply screw 2 | [4] | TCR sensor |
| [5] | Toner supply screw 1 | - | - |

## 5.2 Drive

### 5.2.1 Developing section/K drive mechanism

- Drive force from the transport motor is transmitted to each gears so that the developing roller/K is driven.

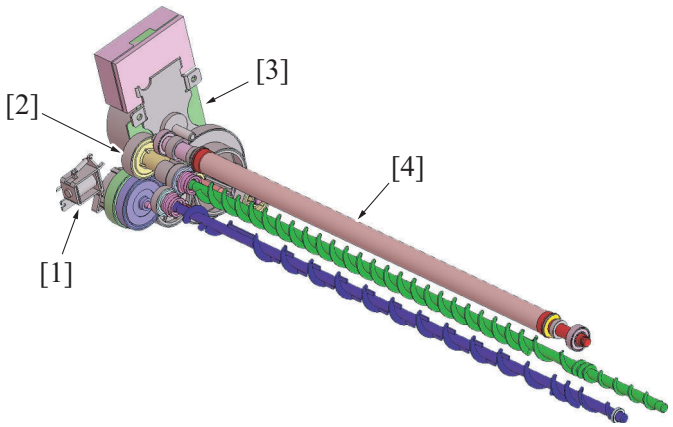


| | | | |
|---|---|---|---|
| [1] | Developing solenoid (SD4) | [2] | Developing drive gear/K |
| [3] | Transport motor (M1) | [4] | Developing roller/K |

### 5.2.2 Developing section/Y, M, C drive mechanism

- Drive force from the developing motor is transmitted to the color dev. unit engaged gear so that the developing section/Y, M, C is driven. Rotation of the developing motor transmits drive to the developing drive gear Y/M/C, which drives each of the developing rollers.

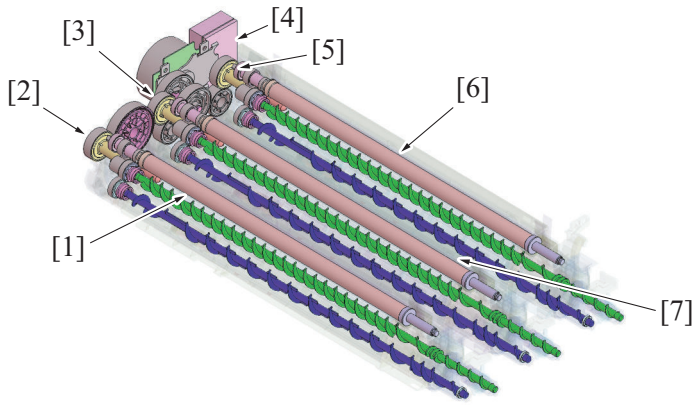


| | | | |
|---|---|---|---|
| [1] | Developing roller/Y | [2] | Developing drive gear/Y |
| [3] | Developing drive gear/M | [4] | Developing motor (M21) |
| [5] | Developing drive gear/C | [6] | Developing roller/C |
| [7] | Developing roller/M | - | - |

## 5.3 Operation

### 5.3.1 Developing unit pressure/releases mechanism

- A mechanism is provided that releases the developing unit from the PC drum to prevent the photo conductor from being damaged when the drum unit is to be removed.
- Rotating the release lever clockwise will cause the rib fixed to the lever to fit into the groove in the developing unit, so that the developing unit is pressed against the drum unit.
- Rotating the release lever counterclockwise will cause the rib fixed to the lever to leave the groove in the developing unit, so that the developing unit is released from the drum unit.

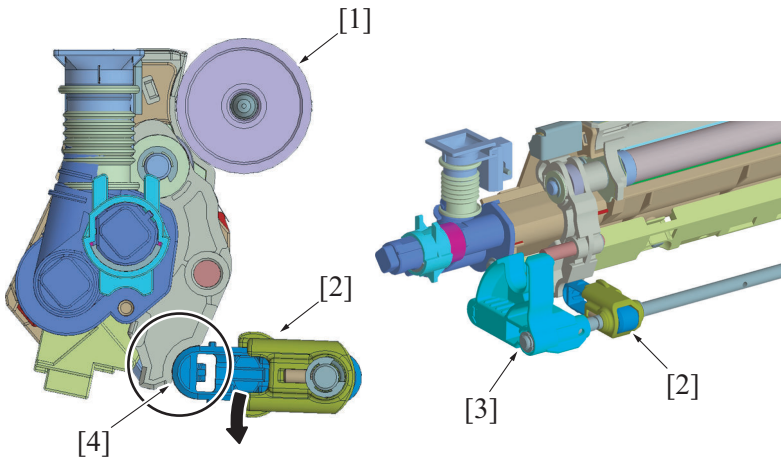


| | | | |
|---|---|---|---|
| [1] | Photo conductor | [2] | Rib |
| [3] | Release lever | [4] | Groove |

### 5.3.2 Developer flow

1. Toner replenished via the toner replenishing port located at the front side of the machine is fed to the toner supply screw 1.
2. The developer is conveyed toward the rear of the unit, while being agitated and electrically charged, by the toner supply screw 1.
3. The TCR sensor is equipped on the underside of the developing unit detects toner to carrier (T/C) ratio during this time. If the T/C ratio is lower than a predetermined value, toner is replenished.
4. The developer, fed to the rear of the developing unit, is conveyed further onto the toner supply screw 2.
5. The developer fed to the toner supply screw 2 is conveyed onto the developing roller because of the magnetic pole positioning of the developing roller.
6. The doctor blade then controls the height of the developer brush to ensure that the developer on the developing roller levels out.
7. Only the toner contained in the developer sticks to the electrostatic latent image on the surface of the photo conductor. The developer that is left on the developing roller is returned to the toner supply screw 2 by the magnetic pole positioning of the developing roller.
8. The part of the circulating developer is collected in the waste toner box through the toner collecting port located at the front side of the toner supply screw 2. The toner collecting port is provided with a shutter mechanism. Mounting the waste toner box pushes the shutter at the toner collecting port, opening the toner collecting port. Removing the waste toner box, on the other hand, closes the shutter and toner is

thereby prevented from spilling from the toner collecting port. (For more details, see O.5.3.3 Auto refining developing system and O.9.3.6 Waste toner spillage prevention shutter.)

**NOTE**

- **The toner replenishing port of the developing unit is not provided with a shutter mechanism. (The toner hopper section is equipped with a shutter.)**
- **When removing the developing unit, the developing unit must be held in a horizontal position with care not to allow toner to spill from the toner replenishing port.**

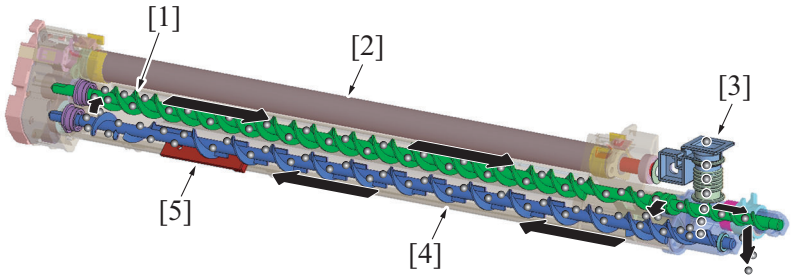


| | | | |
|---|---|---|---|
| [1] | Toner supply screw 2 | [2] | Developing roller |
| [3] | Toner replenishing port | [4] | Toner supply screw 1 |
| [5] | TCR sensor | - | - |

### 5.3.3 Auto refining developing system

- The developing unit (Y/M/C/K) incorporates the auto refining developing system.
- The bottle of toner cartridge is packed with both toner and carrier and the developing unit is replenished with fresh carrier at the same time that it is replenished with toner.
- Excess carrier in the developing unit is discharged, thereby inhibiting carrier left in the developing unit from being deteriorated and maintaining stable image quality for an extended period of time.

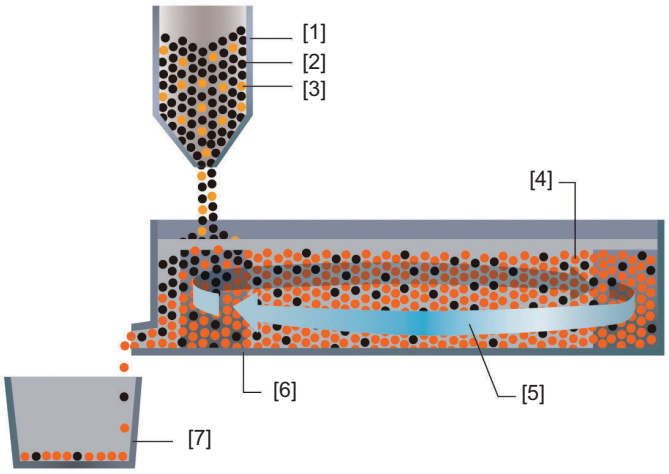


| | | | |
|---|---|---|---|
| [1] | Toner bottle | [2] | Toner |
| [3] | New carrier | [4] | Low degree of deterioration of entire carrier |
| [5] | Circulation and agitation | [6] | Developing unit |
| [7] | Waste toner box | - | - |

### 5.3.4 Developing bias

- The developing bias voltage (Vdc) is applied to the developing roller so that an adequate amount of toner is attracted onto the surface of the photo conductor.
- In addition to the negative DC component, AC voltage is applied during development to help toner to be attracted more easily to the surface of the photo conductor. This AC component is applied only while development is taking place. At any other timing, only the DC (-) Vdc is applied.
- The developing bias (Vdc) is supplied from high voltage unit.
- The developing bias voltage supplied from the high voltage unit is applied to the developing roller of each color of toner via the metal shaft of the developing drive gear.
- See "IMAGE FORMING CONTROL" for the timing to apply the bias voltage.

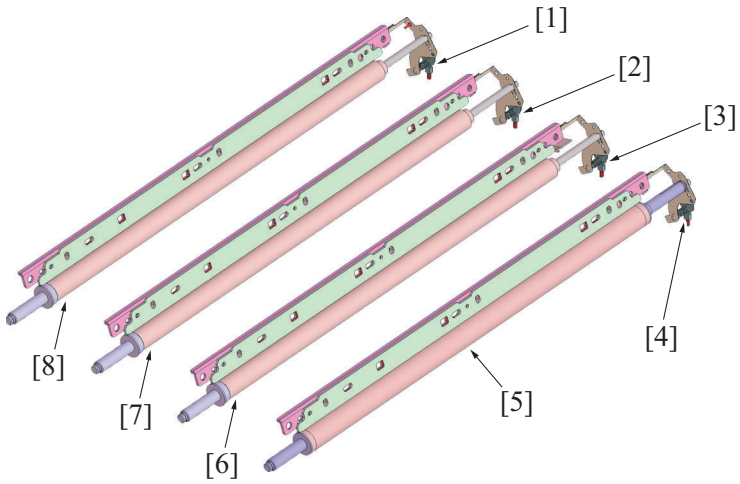


| | | | |
|---|---|---|---|
| [1] | Developing bias voltage application terminal/Y | [2] | Developing bias voltage application terminal/M |
| [3] | Developing bias voltage application terminal/C | [4] | Developing bias voltage application terminal/K |
| [5] | Developing roller/K | [6] | Developing roller/C |
| [7] | Developing roller/M | [8] | Developing roller/Y |

### (1) Service Mode

#### (a) Grad/Dev AC Bias V Selection

- The “Grad/Dev AC Bias V” can be changed by changing the setting of “Imaging Process Adjustment/ Grad/Dev AC Bias V Selection” of the Service Mode. This provides development performance that responds to various types of environment of the users.
- Turning ON the “Grad/Dev AC Bias V Selection” allows the “Grad/Dev AC Bias V” to be decreased down to a voltage value lower than the ordinary specified value.
- With the ordinary specified value set for the “Grad/Dev AC Bias V” in low atmospheric pressure environments, such as at high altitudes, leak could occur, resulting in white dots. Leak, and thus white dots on the image, can be prevented from occurring by lowering the “Grad/Dev AC Bias V”.
- For details of the Service Mode, see “I.5.6.11 Grad/Dev AC Bias V Selection.”

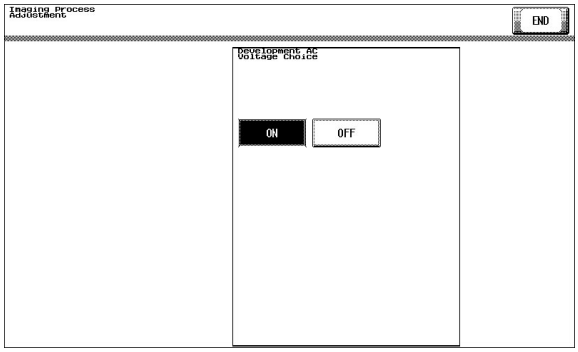


## 5.3.5 Toner scattering prevention

- The toner scattering prevention plate and toner scattering prevention sheet are equipped in an area around the developing roller, functioning to prevent toner from scattering.

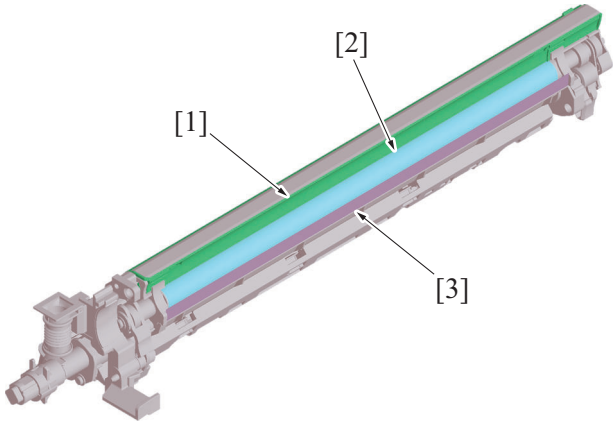


| | | | |
|---|---|---|---|
| [1] | Toner scattering prevention plate | [2] | Developing roller |

| | | | |
|---|---|---|---|
| [3] | Toner scattering prevention sheet | - | - |

### 5.3.6 Developing cooling

- The transfer belt cleaner cooling fan is provided to circulate air through the inside of the machine, so that the areas around the developing unit, drum unit, toner hopper, and the transfer belt unit can be cooled.
- See "FAN CONTROL" for air path and detailed information

### 5.3.7 Toner density control

- The TCR sensor is mounted on the underside of each of the developing sections. The TCR sensor for C, M, Y and K is a non-contact magnetic type. Each of these sensors detects toner-to-carrier ratio (TC) of the developer. The reading is used for determining the amount of toner supplied.
- Only when a new developing unit is installed in the machine, an automatic adjustment (calibration) is made of each of these TCR sensors. The automatic adjustment of TCR sensors cannot be done at your own discretion.
- The target TC ratio is 6.5 ± 1.5%.
- The magnetic permeability (powder density) of the carrier in the developer is measured to determine the TC ratio.
- The TCR sensor is integrated with the developing unit. When the TCR sensor is to be replaced with a new one, the entire developing unit must be replaced.
- For replenishment of toner to the developing unit, see “O.6.3.4 Auxiliary toner replenishing control for toner hopper”.

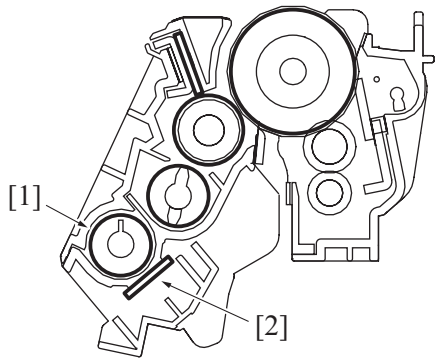


| | | | |
|---|---|---|---|
| [1] | Toner supply screw 1 | [2] | TCR sensor |

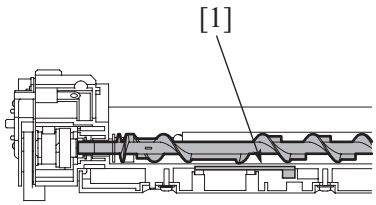


| | | | |
|---|---|---|---|
| [1] | TCR sensor | - | - |

### 5.3.8 Developing unit detection

- The developing unit of each color of toner is provided with a TCR sensor. The sensor detects different states of the corresponding developing unit.

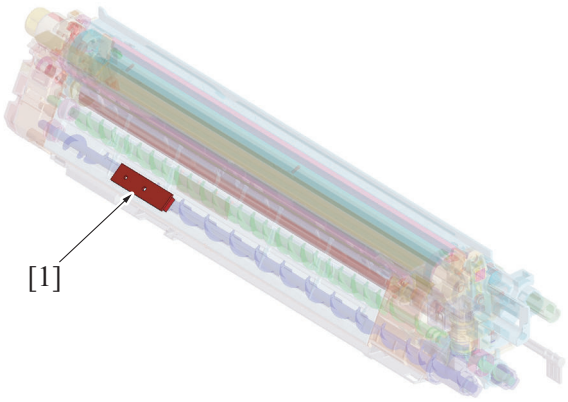

| | | | |
|---|---|---|---|
| [1] | TCR sensor | - | - |

### (1) Unit mounting detection

- The TCR sensor detects the mounting condition of the developing unit.
- When developing unit is detected in the mounted condition, control now proceeds to the “new article detection control”.

#### (a) Detection timing

- The unit mounting detection control is performed under any of the following conditions:
  “The power switch is turned ON (with the front door and right door are closed)”
  “The front door or right door is opened and closed with the power switch in ON position”

#### (b) Operation when it is detected that no units are mounted

- The message “Developing Unit Installation Error” appears on the control panel and the machine prohibits initiation of any new print cycle. The message “Developing Unit Installation Error” disappears as soon as a developing unit is mounted.

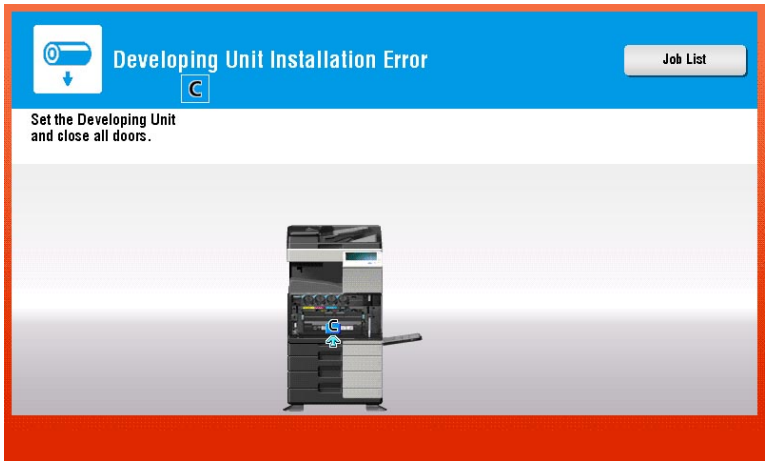


### (2) New article detection

- The TCR sensor detects whether the developing unit is new or not.

#### (a) Detection timing

- The new article detection control is performed if it is determined through the “unit mounting detection” control that the developing unit is correctly mounted in place.

#### (b) Operation when the developing unit is determined not to be new

- The new article detection control is terminated.

#### (c) Operation when the developing unit is determined to be new

- The TCR sensor automatic adjustment control (calibration) is performed.
- The image stabilization control is performed.
- The life counter of the developing unit is reset to zero.
- After the above controls are performed, the operation proceeds to the life detection control.
- The result of the new article detection is recorded in the eMMC board of the main body.
- The life counter is available for the developing unit of each color. The counter value is recorded in the eMMC board of the main body.

### (3) New article detection-disabled mode

- The new article detection-disabled mode is used when a new developing unit is temporarily used for performing troubleshooting procedures of a machine.
- No new article detection control is performed for the developing unit when the new article detection-disabled mode is used.
- The new article detection-disabled mode should be used only for troubleshooting purposes.

**NOTE**

- **See “I.7.3.9 Engine FW DipSW” for more detailed operating precautions.**

## 5.3.9 Developing unit life detection

**NOTE**

- **On this machine, [Display] is specified by default for the life display.**
- **[Off] is specified by default for the life stop display, when the life stop is reached this machine does not stop and printing is possible.**
- **To confirm the life of each unit from the Life value of consumables and parts, and from [Service Mode] -> [Counter] -> [Life].**

### (1) Counter life determination

- If the developing unit printed counter reaches the threshold, the machine determines that the developing unit has reached a new state.

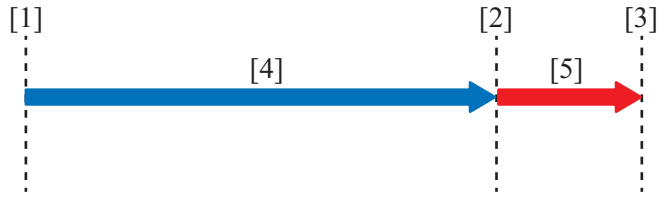


| | | | |
|---|---|---|---|
| [1] | New article (starts to be used) | [2] | Life display |
| [3] | Life stop display | [4] | Image guaranteed range |
| [5] | Outside image guaranteed range | - | - |

### (2) Life detection

- The life has been reached when the developing unit print counter has value reached the life threshold value.

#### (a) Life display setting

- On this machine, since the life display is specified to [Display] by default, a display appears when the life is reached. Configure the reaching life display settings as necessary. [Service Mode] -> [System 2] -> [Unit Change] -> [Near Life Display Settings]

### (3) Life stop detection

- The life is stopped when the developing unit print counter value has reached the life stop threshold value.

#### (a) Life stop display setting

- On this machine, since the life display and the life stop are specified to [Off] by default, a warning display does not appear and the print job does not stop even when the life is reached.
- Configure the life stop settings as necessary. [Service Mode] -> [Enhanced Security] -> [Life Stop Setting]

#### (b) Life stop display

- When it reached the life stop, and the life display is specified to [On] with the life stop display settings, the life warning appears and the print job is prohibited.

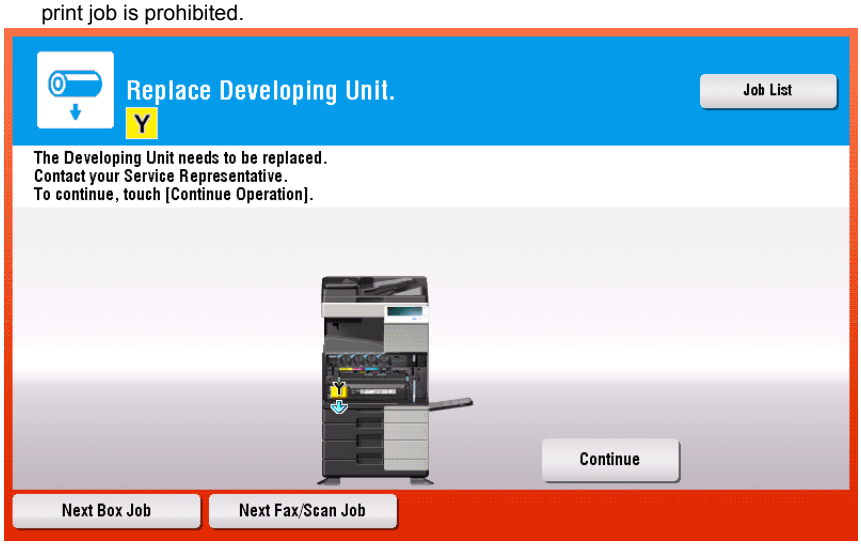


**NOTE**

- **When the developing unit reaches its life and a print job is disabled, touching the [Continue] key allows the print job to be restarted in black.**

## 5.3.10 Number of field standard printed pages

- The number of field standard printed pages is specified for this machine based on calculation made by assuming field standard job modes as determined using the print volume and use conditions of the user. Note, however, that the number of printed pages of the developing unit varies depending on how the user uses the machine.
- For details, see “F.5.1 Life value of consumables and parts”.

# 6. TONER SUPPLY SECTION

## 6.1 Configuration

Toner cartridge

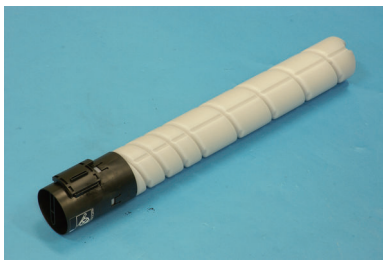

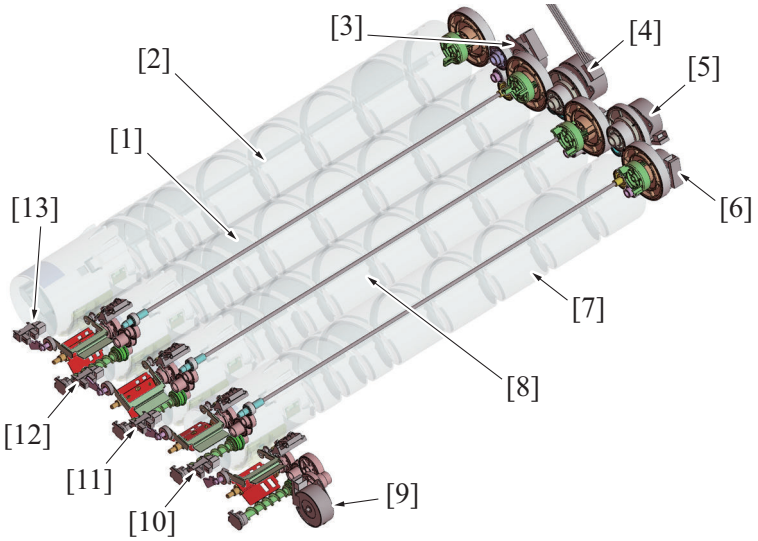


| | | | |
|---|---|---|---|
| [1] | Toner cartridge/M | [2] | Toner cartridge/Y |
| [3] | Toner supply motor/Y (M9) | [4] | Toner cartridge motor/Y,M,C (M10) |
| [5] | Toner cartridge motor/K (M25) | [6] | Toner supply motor/C (M7) |
| [7] | Toner cartridge/K | [8] | Toner cartridge/C |
| [9] | Toner supply motor/K (M6) | [10] | Toner empty sensor/K (PS31) |
| [11] | Toner empty sensor/C (PS32) | [12] | Toner empty sensor/M (PS33) |
| [13] | Toner empty sensor/Y (PS34) | - | - |

## 6.2 Drive

### 6.2.1 Toner cartridge drive

- The toner cartridge motor rotates to drive the toner cartridge. The interior of the toner cartridge is in spiral form. As the toner cartridge rotates, toner inside the toner cartridge is conveyed toward the toner replenishing port that is located at the front side. So that the toner hopper is replenished with the toner from the toner cartridge.
- The toner cartridge motor/Y,M,C drives the toner cartridge/Y,M,C; and the toner cartridge motor/K drives the toner cartridge/K. The toner cartridge drive is switched depending on the color and monochrome print applications.

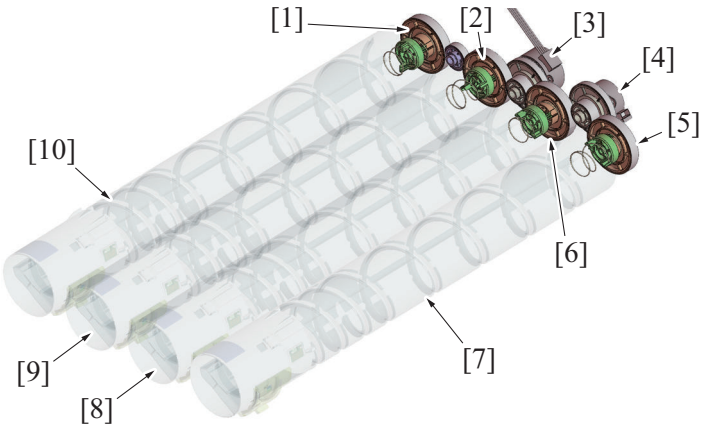

| | | | |
|---|---|---|---|
| [1] | Toner cartridge drive gear/Y | [2] | Toner cartridge drive gear/M |
| [3] | Toner cartridge motor/Y,M,C (M10) | [4] | Toner cartridge motor/K (M25) |
| [5] | Toner cartridge drive gear/K | [6] | Toner cartridge drive gear/C |
| [7] | Toner cartridge/K | [8] | Toner cartridge/C |
| [9] | Toner cartridge/M | [10] | Toner cartridge/Y |

### 6.2.2 Toner hopper drive

- Rotation of the toner supply motor causes the toner agitating blade and toner conveying screw inside the toner hopper to rotate.
- Toner conveyed into the toner hopper is agitated by the toner agitating blade.
- As the toner conveying screw rotates, toner is conveyed onto the toner replenishing port located at the front side inside the toner hopper, so that the toner is fed into the developing unit via the toner replenishing pipe.

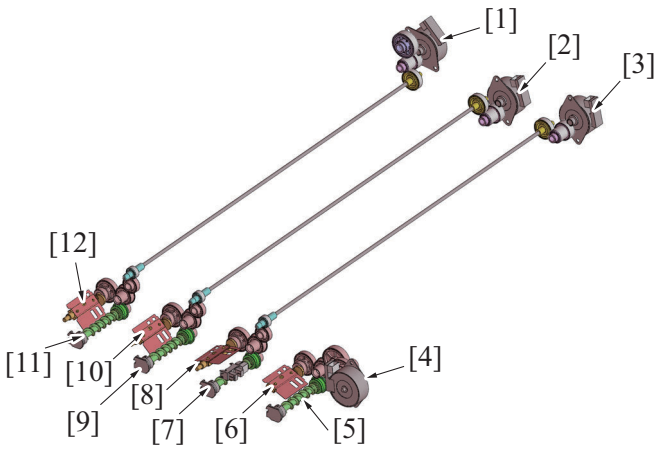


| | | | |
|---|---|---|---|
| [1] | Toner supply motor/Y (M9) | [2] | Toner supply motor/M (M8) |
| [3] | Toner supply motor/C (M7) | [4] | Toner supply motor/K (M6) |
| [5] | Toner conveying screw/K | [6] | Toner agitating blade/K |
| [7] | Toner conveying screw/C | [8] | Toner agitating blade/C |
| [9] | Toner conveying screw/M | [10] | Toner agitating blade/M |
| [11] | Toner conveying screw/Y | [12] | Toner agitating blade/Y |

## 6.3 Operation

### 6.3.1 Toner replenishing overview

- The toner replenishing mechanism in this machine has a two-step replenishing structure. One is replenishing the toner hopper with the toner from the toner cartridge. The other one is replenishing the developing unit with the toner from the toner hopper.
- The toner cartridge incorporates the auto refining developing system for all colors.
- The interior of the toner cartridge is packed with both toner and carrier. The developing unit is replenished with fresh carrier at the same time of replenishing the toner. Excess carrier in the developing unit is discharged, thereby inhibiting carrier left in the developing unit from being deteriorated and maintaining stable image quality for an extended period of time.
- For details of the auto refining developing system, see “O.5.3.3 Auto refining developing system”.

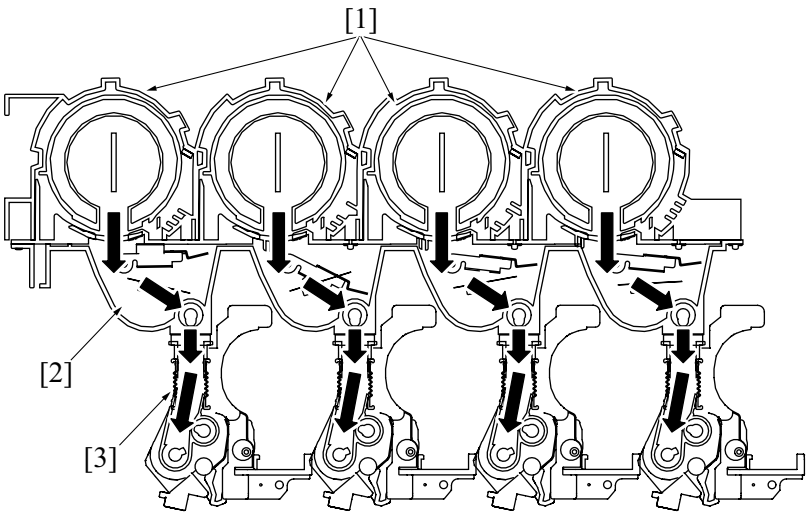


| | | | |
|---|---|---|---|
| [1] | Toner cartridge | [2] | Toner hopper |
| [3] | Toner replenishing pipe | - | - |

### 6.3.2 Toner replenishing from toner bottle to toner hopper

#### (1) Toner replenishing mechanism

- The toner replenishing from the toner cartridge to the toner hopper is determined by unblocking and blocking the toner empty sensor.
- If the toner empty sensor is blocked a predetermined number of times, the machine determines that it is in a near empty condition. So that, the toner cartridge motor is energized and a toner replenishing sequence is started.
- The toner hopper for each color of toner is provided with a toner empty sensor.
- Each toner empty sensor is blocked or unblocked by an actuator dedicated to it. The detection plate is moved up and down by a cam that is mounted coaxially with the toner agitating blade. The actuator that is mounted on the detection plate is operatively associated with the up-and-down movement that is detected using the toner empty sensor.

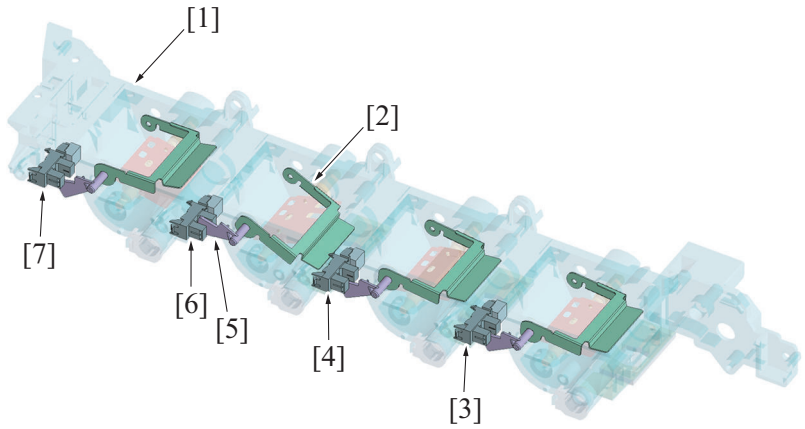


| | | | |
|---|---|---|---|
| [1] | Toner hopper | [2] | Detection plate |
| [3] | Toner empty sensor/K (PS31) | [4] | Toner empty sensor/C (PS32) |
| [5] | Actuator | [6] | Toner empty sensor/M (PS33) |
| [7] | Toner empty sensor/Y (PS34) | - | - |

#### (2) Toner replenishing control

- The toner replenishing control is started when the drive of the toner cartridge motor is started.
- The output of the toner empty sensor is monitored for a predetermined period of time.
  If the toner empty sensor is turned ON from the OFF state, during the predetermined period of time, the machine determines that the “toner hopper runs out of toner (or there is only a small amount of toner left in the toner hopper)” and increments the near empty counter by one. Next, the toner cartridge motor is rotated for a predetermined period of time, so that toner is supplied from the toner cartridge to the toner hopper.
- If the toner empty sensor remains OFF, the machine determines that “toner is still available for use in the toner hopper”, resetting the near empty counter to zero.
- These operations are repeated and, when the near empty counter reaches 3 or more, the machine determines that the toner hopper is in the near empty condition.

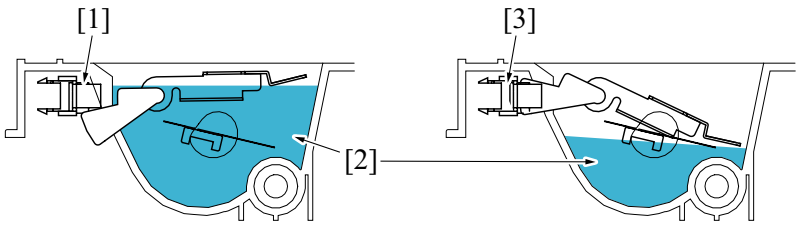


| | | | |
|---|---|---|---|
| [1] | Toner empty sensor: OFF | [2] | Toner |
| [3] | Toner empty sensor: ON | - | - |

### 6.3.3 Toner replenishing from toner hopper to developing unit

#### (1) Toner replenishing control

- Control of replenishing the developing unit with toner from the toner hopper is performed only when the developing unit is driven.
- The toner replenishing time (the amount of toner supplied) during the toner replenishing control is determined based on the T/C ratio detected by the TCR sensor (noncontact magnetic type) disposed at the developing unit for each color of toner and the amount of toner to be consumed (estimated) for the image to be printed.
- If replenishing is interrupted by a paper misfeed, the front door opened or closed, or any similar event, the required replenishing time is carried forward to the next replenishing control sequence.

- For details of the TCR sensor, see "O.5.3.7 Toner density control".

### (2) Toner replenishing mechanism

- Four toner supply motors drive the toner conveying screws and the toner agitating blades provided in the toner hoppers of four different colors of toner.
- The toner supply motor of each color drives the toner conveying screw and the toner agitating blade.
- The toner agitating blade rotates to agitate toner in the toner hopper.
- The toner conveying screw rotates to replenish the developing unit with toner.

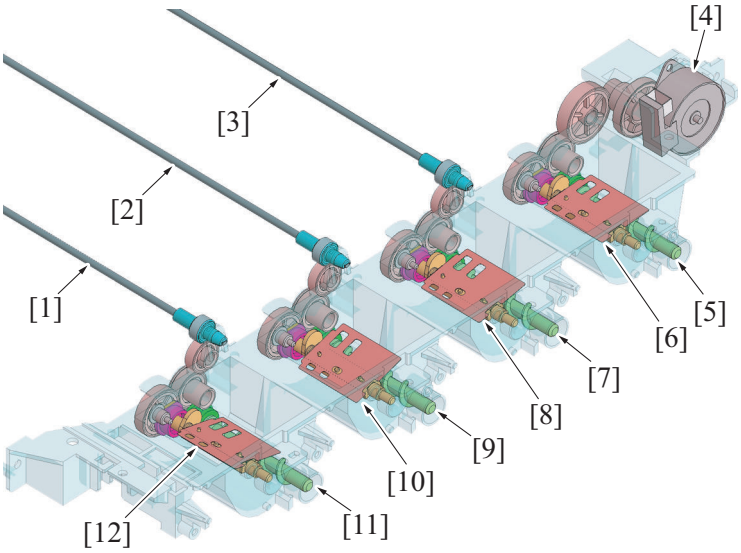


| | | | |
|---|---|---|---|
| [1] | Drive from toner supply motor/Y | [2] | Drive from toner supply motor/M |
| [3] | Drive from toner supply motor/C | [4] | Toner supply motor/K (M6) |
| [5] | Toner conveying screw/K | [6] | Toner agitating blade/K |
| [7] | Toner conveying screw/C | [8] | Toner agitating blade/C |
| [9] | Toner conveying screw/M | [10] | Toner agitating blade/M |
| [11] | Toner conveying screw/Y | [12] | Toner agitating blade/Y |

### (3) Toner agitating blade drive

1. Toner conveying screw is rotated by the driving of the toner supply motor.
2. The rotation of the toner conveying screw is transmitted to the toner agitating blade drive gear, which results in the toner agitating blade being rotated. The toner agitating blade rotates to agitate toner in the toner hopper.
3. The cam mounted coaxially with the toner agitating blade moves the detection plate and actuator up and down.

*: For details of the toner empty sensor , see "O.6.3.9 Life control".

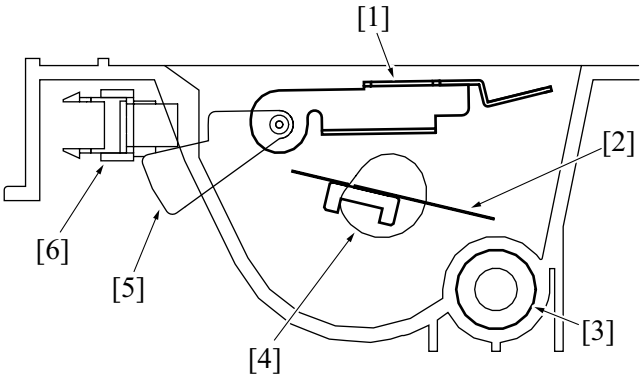


| | | | |
|---|---|---|---|
| [1] | Detection plate | [2] | Toner agitating blade |
| [3] | Toner conveying screw | [4] | Cam (operatively connected to toner agitating blade shaft) |
| [5] | Actuator | [6] | Toner empty sensor |

## 6.3.4 Auxiliary toner replenishing control for toner hopper

- If the amount of toner in the toner hopper is likely decreasing, control is performed to supply toner forcibly from the toner cartridge to the toner hopper.
- The machine prohibits initiation of any new print cycle while the auxiliary toner replenishing control is being executed.

#### (1) Toner hopper auxiliary toner replenishing control execution timing

- Rotate the toner cartridge motor for a predetermined time to supply toner from the toner cartridge to the toner hopper under one of the following conditions:
  "The toner replenishing menu is performed from the Service Mode"
  "The toner cartridge is replaced with a new one after a toner empty condition is detected in the toner cartridge (toner empty reset control is performed)"
  "The developing unit is replaced with a new one (developing unit new article detection control is performed)"
  "The toner replenishing menu is manually performed from the Service Mode"

#### (2) Toner hopper auxiliary toner replenishing control end timing

- The auxiliary toner replenishing control is terminated under any of the following conditions:
  "A predetermined period of time elapses after the toner cartridge motor has been energized"
  "The front door is opened and closed"
  "An error or malfunction occurs"
  "The machine enters the power save or sleep mode"

### 6.3.5 Auxiliary toner replenishing control for developing unit

- If the T/C ratio detected by the TCR sensor is equal to, or lower than, a predetermined value at the start of a print cycle, initiation of the print cycle is prohibited and the developing unit is replenished with toner from the toner hopper until the T/C value reaches the predetermined value. (for a period of about 4 min. maximum)
- The auxiliary toner replenishing control for developing unit is terminated as soon as the predetermined T/C ratio is recovered.
  It is also terminated if the auxiliary toner replenishing control for developing unit is repeated ten sets. Also, it will be terminated when a toner empty condition is detected in the toner cartridge.

#### (1) Operation flow

- When the auxiliary toner replenishing control is performed, the following operations will also be performed. Agitate the toner hopper, calculate the T/C ration with the TCR sensor for each color, and replenish toner from toner cartridge to the toner hopper are performed.
- The auxiliary toner replenishing control is performed for a maximum of about 4 min.

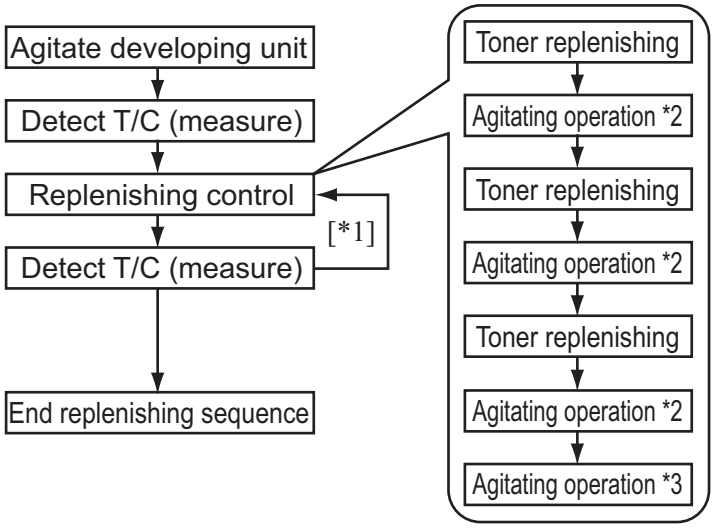


- *1: If a predetermined T/C is not reached, return to replenishing control. (a maximum of 10 times)
- *2: Agitate developing unit during replenishing
- *3: Agitate developing unit after replenishing

### 6.3.6 Toner spillage prevention shutter

#### (1) Toner cartridge

##### (a) Mounting

- The shutter of the toner replenishing port is opened when the handle of the toner cartridge is rotated clockwise to the toner replenishing position after the toner cartridge has been inserted into the toner cartridge mounting portion.
- The toner cartridge motor rotates to drive the toner cartridge.
- As the toner cartridge rotates, toner inside the toner bottle is conveyed toward the toner replenishing port, so that the toner hopper is replenished with toner.

##### (b) Removal

- The shutter at the toner replenishing port must be closed when the toner cartridge is to be removed.
- Rotating the handle of the toner cartridge counterclockwise to the cartridge removal position closes the shutter of the toner replenishing port. The toner cartridge can be removed when the toner replenishing port of the toner cartridge is closed.

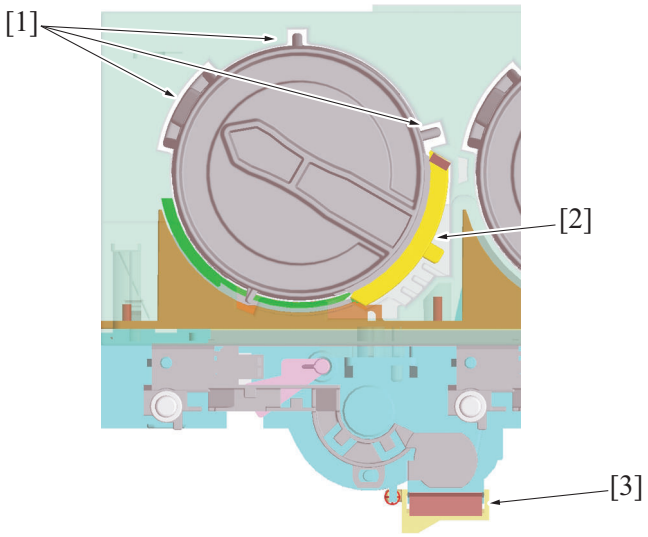


| | | | |
|---|---|---|---|
| [1] | Toner cartridge positioning protrusion | [2] | Toner cartridge toner spillage prevention shutter |
| [3] | Toner hopper toner spillage prevention shutter | - | - |

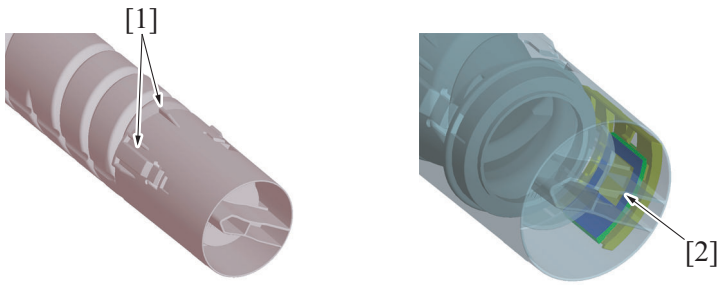


| | | | |
|---|---|---|---|
| [1] | Toner cartridge positioning protrusion | [2] | Toner cartridge toner replenishing port (toner cartridge removal position) |

### (2) Toner hopper

- The toner replenishing port of the toner hopper of each color of toner is provided with a toner spillage prevention shutter that prevents toner from spilling during removal or reinstallation of the developing unit.
- Mounting the developing unit pushes the shutter at the toner replenishing port, opening the toner replenishing port. Removing the developing unit, on the other hand, closes the shutter and toner is thereby prevented from spilling from the toner replenishing port.

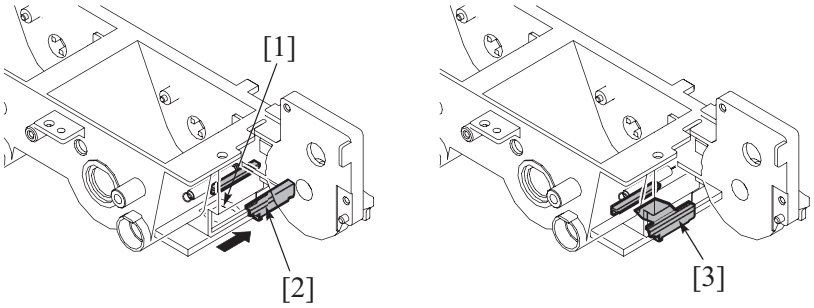


| | | | |
|---|---|---|---|
| [1] | Toner replenishing port | [2] | Toner hopper toner spillage prevention shutter (opened: toner replenishing position) |
| [3] | Toner hopper toner spillage prevention shutter (closed: developing unit removal position) | - | - |

## 6.3.7 Toner cartridge cooling mechanism

- The machine is equipped with a toner cartridge cooling fan to equipped cooling to the toner cartridge area and the fusing section.
- The toner cartridge cooling fan sucks air from the rear side of the main body and pushes it in between the fusing unit and the toner cartridge/K.

- Creation of air flow between the fusing unit and toner cartridge may make the heat generates from the fusing unit hardly reach the toner cartridge area. It limits the increase in temperature of the toner cartridge area.

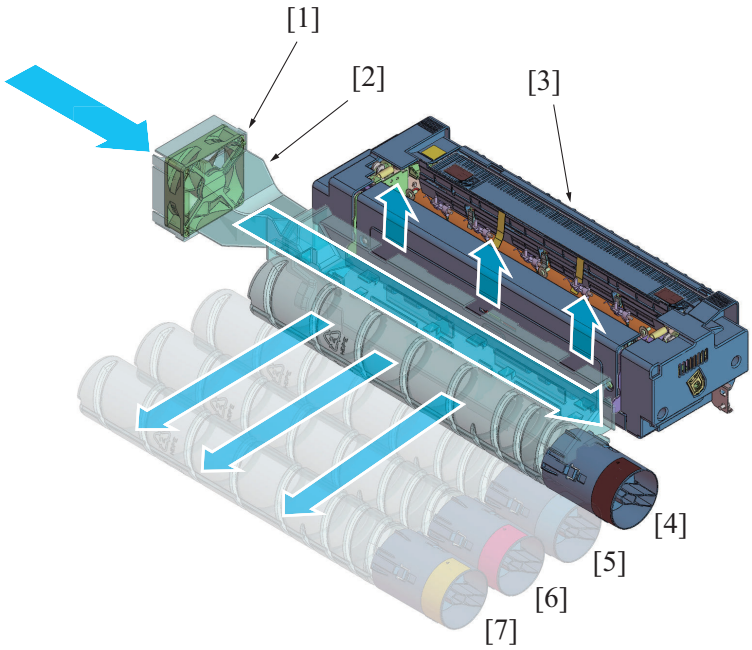


| | | | |
|---|---|---|---|
| [1] | Toner cartridge cooling fan (FM4) | [2] | Duct |
| [3] | Fusing unit | [4] | Toner cartridge/K |
| [5] | Toner cartridge/C | [6] | Toner cartridge/M |
| [7] | Toner cartridge/Y | - | - |

### 6.3.8 Front door mechanism

- The main power switch and total counter are mounted inside the front door.

#### (1) Front door locking mechanism

- The front door is provided with a locking mechanism.

##### (a) Unlocking the front door

- Pulling the front door to the front will release the door lock magnets (two) provided at the upper portion of the front door.

##### (b) Locking the front door

- Close the front door. When the front door is closed in its correct position, the door lock magnets (two) provided at the upper portion of the front door lock the front door in place.
- The front door is provided with a protrusion that detects the correct mounting of the toner cartridge. It prevents operation of the machine, when the toner replenishing shutter of the toner cartridge is closed.

#### (2) Front door open/close detection mechanism

- The front door switch detects that the front door is opened or closed.
- When the front door is closed, the open/close detection protrusion provided at the upper portion on the left side of the front door presses the actuator of the front door switch. This turns ON the front door switch and the machine determines that the front door is closed.
- When the front door is opened, the front door switch actuator is released, which turns OFF the front door switch. The machine then determines that the front door is open and shows a message that prompts the operator to close the front door.
- When it is determined that the front door is open, use of all jobs but the fax reception job is prohibited. In addition, a paper misfeed results if the front door is opened during a print job.

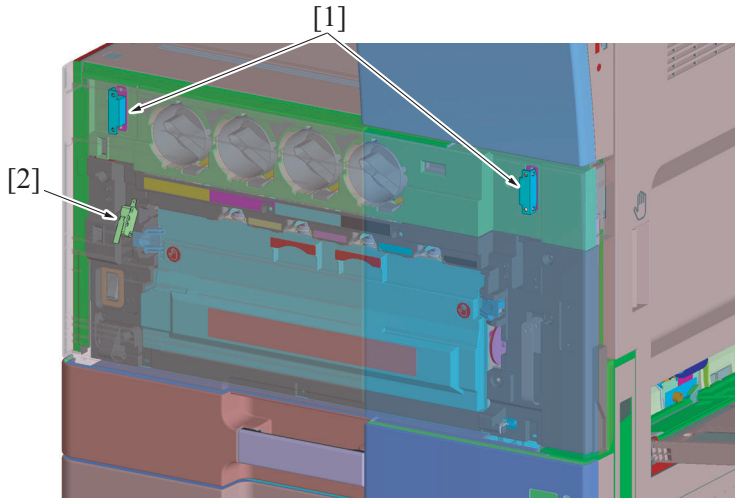


| | | | |
|---|---|---|---|
| [1] | Door lock magnet | [2] | Front door switch (SW2) |

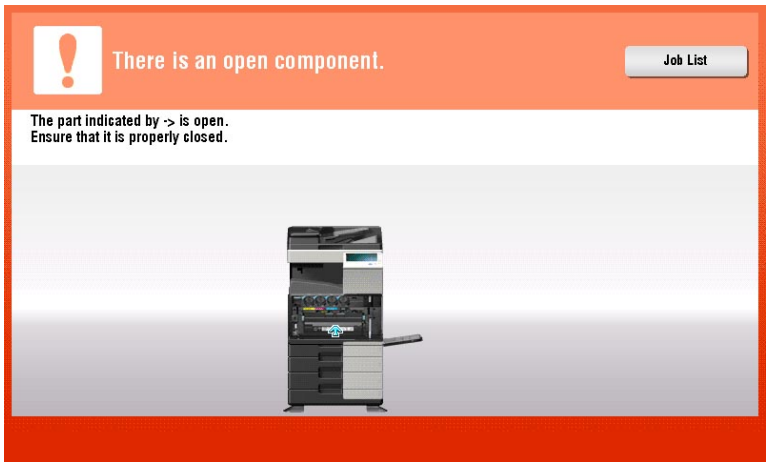


### 6.3.9 Life control

#### (1) Toner near empty detection

- The toner empty sensor provided for the toner hopper of each color of toner is used to determine the amount of toner still available for use in the toner hopper.
- The cam that is mounted coaxially with the detection plate moves up and down depending on the remaining amount of the toner. Thus, the toner empty sensor detects the condition.
- If the near empty counter exceeds 3 during control of replenishing the toner hopper with toner, a toner near empty condition is considered. As a result, it prompts to perform the toner empty control.
- For details of the toner replenishing control, see "O.6.3.2 Toner replenishing from toner bottle to toner hopper".

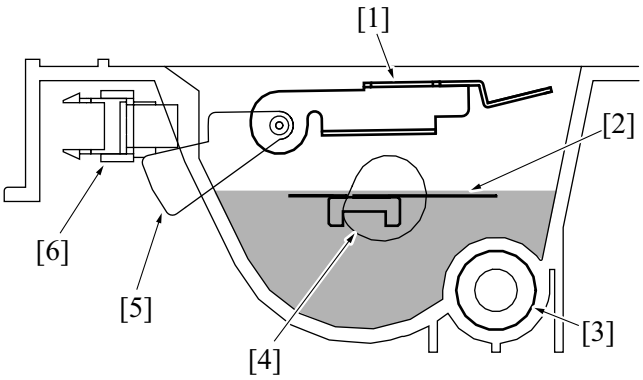


| | | | |
|---|---|---|---|
| [1] | Detection plate | [2] | Toner agitating blade |
| [3] | Toner conveying screw | [4] | Cam (operatively connected to toner agitating blade shaft) |
| [5] | Actuator | [6] | Toner empty sensor |

### (a) Toner near empty detection timing

- The toner replenishing control is started when the drive of the toner supply motor is started.
- The output of the toner empty sensor is monitored for a predetermined period of time.
  If the toner empty sensor is turned ON from the OFF state, during the predetermined period of time, the machine determines that the "toner hopper runs out of toner (or there is only a small amount of toner left in the toner hopper)" and increments the near empty counter by one.
- If the toner empty sensor remains OFF, the machine determines that "toner is still available for use in the toner hopper", resetting the near empty counter to zero.
- If the near empty counter is incremented by 3 or more through the foregoing operations repeatedly performed, the machine determines that the toner hopper is in a toner near empty condition and gives the message "Toner is low. Replace when indicated" on the control panel.

### (b) Toner near empty display

- The warning screen to be displayed when a toner near empty is detected can be enabled or disabled in the "System 2/ Unit Change" in the Service Mode.
- When the warning screen display is set to "Yes", the message notifying the user that the toner cartridge needs replacing soon is displayed. (Toner is low. Replace when indicated)
  Printing can be continued even after the message appears.
- When the warning screen display is set to "No", the message notifying the user that the toner cartridge needs replacing soon is not displayed. Printing can be continued without having the message displayed.

## (2) Toner empty detection

- The machine determines a toner empty condition by using the toner empty sensor provided for the toner hopper of each color of toner, the toner supply motor at the toner hopper, and the TCR sensor provided for the developing unit of each color of toner.

### (a) Toner empty detection timing

- The machine determines a toner empty condition when any of the following conditions is detected after a toner near empty condition has been detected. It then gives the message "Toner has been depleted. (snip)" on the control panel.
  1. The rotation time of the toner supply motor (amount of toner replenished) exceeds the predetermined value.
     Note, however, that the cumulative rotation time of the toner supply motor is reset to zero, if the event that "the toner hopper runs out of toner (or there is only a small amount of toner left in the toner hopper)" is not detected by the toner empty sensor within a predetermined period of time after the toner near empty condition has been detected.
  2. The TCR sensor detects a T/C ratio that is lower than a predetermined value.

### (b) Toner empty display

- The screen mode to be displayed when a toner empty is detected can be selected by specifying the person who replaces the unit in the "System 2/ Unit Change" in the Service Mode.
- When User is selected as the person, the message requesting toner cartridge replacement by user is displayed when a toner empty condition is detected. (Toner has been depleted. Replace the toner cartridge.)
- When Service is selected as the person, the message prompting service engineer to replace the toner cartridge is displayed. (Out of toner. Contact your service representative.)

## (3) Resetting the toner near empty and toner empty conditions

- Either the "auxiliary toner replenishing control for toner hopper" or "auxiliary toner replenishing control for developing unit" is performed (both may be performed in some cases) after a toner near empty condition and a toner empty condition have been detected.
- The toner near empty/empty display is reset when the control is normally terminated.
- Initiation of a new print cycle is prohibited during execution of the "auxiliary toner replenishing control for toner hopper" and "auxiliary toner replenishing control for developing unit".
- See the relevant pages for more details of the "Auxiliary toner replenishing control for toner hopper" and "Auxiliary toner replenishing control for developing unit".

List of controls

| Control name | Parts to be controlled | Description |
|---|---|---|
| Auxiliary toner replenishing control for developing unit | Developing unit | Recovers the T/C ratio of the developer in the developing unit. |
| Auxiliary toner replenishing control for toner hopper | Toner hopper | Recovers the amount of toner in the toner hopper. |

| Condition | Toner in unit | | Control to be executed | Printing after the end of the control |
|---|---|---|---|---|
| | Developing unit | Toner hopper | | |
| Near empty | Available | Decreasing | Auxiliary toner replenishing control for toner hopper | Empty display is reset if the amount of toner in the toner hopper is recovered. |
| Empty 1 | Available | Not available | | Empty display stays put if the amount of toner in the toner hopper is not recovered. |
| Empty 2 | Not available | Not available | Auxiliary toner replenishing control for toner hopper + auxiliary toner replenishing control for developing unit | Empty display is reset if the T/C ratio is recovered. |
| | | | | Empty display stays put if the T/C ratio is not recovered. |

### (a) Toner empty condition resetting timing

- The “auxiliary toner replenishing control for toner hopper” or “auxiliary toner replenishing control for developing unit” is executed under any of the following conditions after a toner near empty/toner empty condition has been detected:
  “The main power switch is turned ON”
  “Release in sub power off mode”
  “The front door or the like is opened and closed”

### (b) Precaution when replacing toner cartridge

- A mechanism for detecting the residual toner inside the bottle is not provided to the toner cartridge. Therefore, make sure that the toner near empty or toner empty message is displayed before replacing the new toner cartridge. Do not replace with the new toner cartridge until the toner near empty or toner empty message is displayed.
- The toner amount data (level gauge) of the control panel determines that “Toner cartridge is replaced with new one” after toner empty status changes to the normal status, and the “Toner amount data” is reset to zero. Therefore, in cases where the toner cartridge is replaced with a new one before the toner near empty or toner empty message is displayed, the “Toner amount data” fails to be cleared, which creates the conflicting indicators of “Toner amount data displayed” on the control panel and the “Toner current level” in the toner cartridge.
- Toner amount data displayed on the control panel may highlight the phenomenon of toner still remaining in the toner cartridge even though the toner empty indicator is activated.

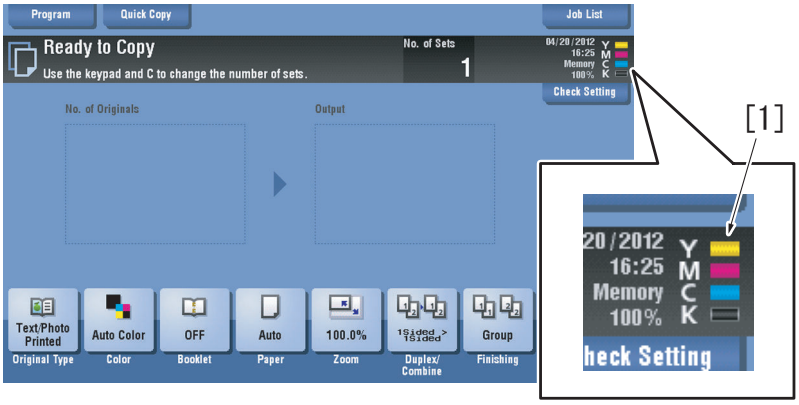


| | | | |
|---|---|---|---|
| [1] | Toner amount data (level gauge) | - | - |

# 7. 1ST TRANSFER SECTION

## 7.1 Configuration

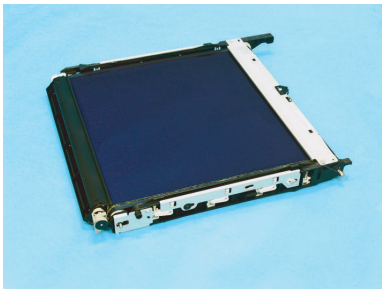

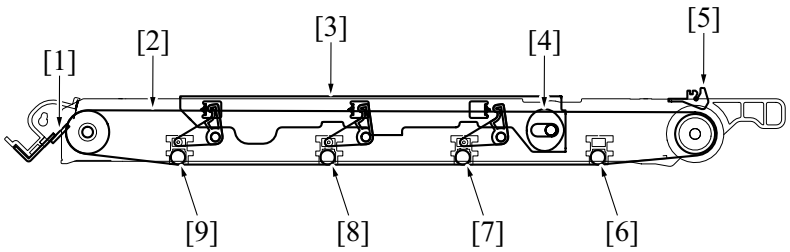


| | | | |
|---|---|---|---|
| [1] | Cleaning blade | [2] | Transfer belt |
| [3] | 1st transfer roller pressure mechanism | [4] | 1st transfer roller pressure cam |
| [5] | Separation claw | [6] | 1st transfer roller/K |
| [7] | 1st transfer roller/C | [8] | 1st transfer roller/M |
| [9] | 1st transfer roller/Y | - | - |

## 7.2 Drive

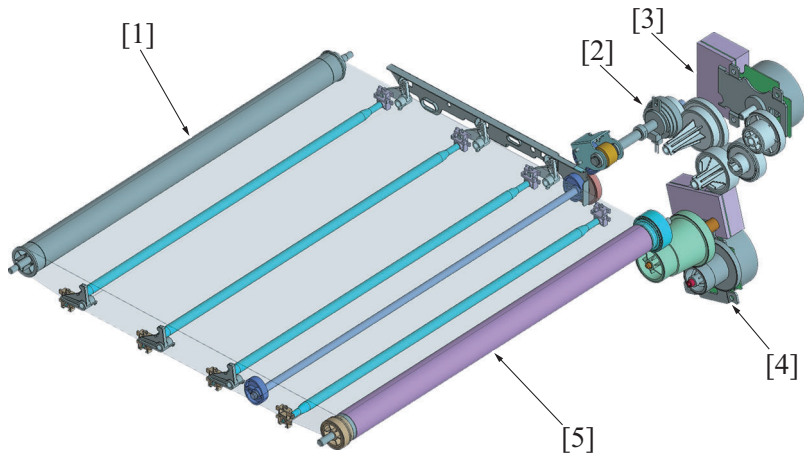


| | | | |
|---|---|---|---|
| [1] | Transfer belt driven roller | [2] | 1st transfer pressure clutch (CL5) |
| [3] | Fusing motor (M3) | [4] | Transport motor (M1) |
| [5] | Transfer belt drive roller | - | - |

## 7.3 Operation

### 7.3.1 Transfer belt drive

- The transfer belt drive roller is rotated by the driving force of the transport motor.

- Rotation of the transfer belt causes the transfer belt driven roller to rotate. The drive transmission gear located at the transfer belt driven roller rotates the waste toner conveying screw of the cleaning mechanism.

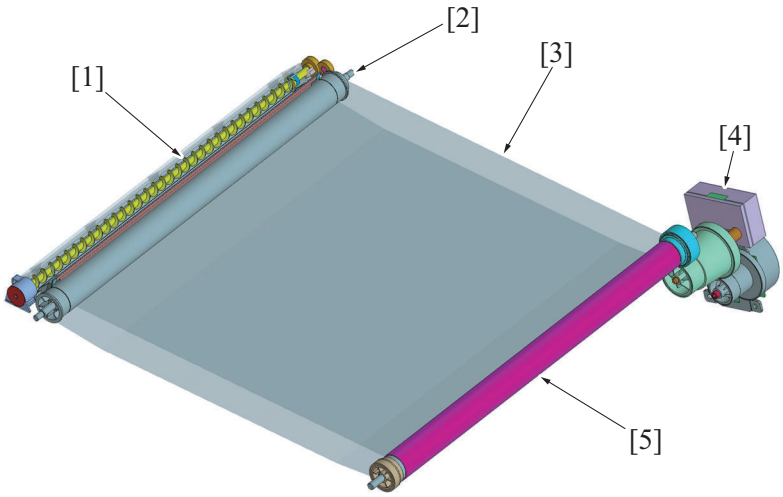


| | | | |
|---|---|---|---|
| [1] | Waste toner conveying screw | [2] | Transfer belt driven roller |
| [3] | Transfer belt | [4] | Transport motor (M1) |
| [5] | Transfer belt drive roller | - | - |

### 7.3.2 1st transfer roller control

- Pressure mechanism is equipped for pressing the 1st transfer rollers (Y, M, C) to inside the transfer belt at the 1st transfer.
- The 1st transfer roller (K) does not have pressure retraction mechanism. The 1st transfer roller (K) always presses the transfer belt to the PC drum (K).
- The driving force of the fusing motor is transmitted to the fusing drive release gear and transfer belt retraction clutch, thereby pressing the 1st transfer roller. The fusing drive release gear is moved to the drive coupling position when the right door is closed, so that the driving force can be transmitted. For more details of the fusing drive release mechanism, see “O.14.3.1 Fusing drive release mechanism”.

#### (1) 1st transfer roller pressure

- Rotation of the fusing motor is transmitted to the transfer belt retraction clutch via the fusing drive release gear.
- When the 1st transfer pressure clutch is turned ON, the rotation of the fusing motor is transmitted to the drive gear.
- Rotation of the drive gear rotates the pressure cam, so that the position of contact between the slide plate and the cam is varied.
- The 1st transfer roller pressure spring provided for the slide plate causes the slide plate to move to the pressure position. (Toward the transfer belt driven roller side.)
- The movement of the slide plate results in the 1st transfer roller drive arm being rotated. The rotation of the 1st transfer roller drive arm lowers the 1st transfer roller (Y, M, C), so that the transfer belt is pressed against the PC drum.
- When the slide plate moves to the pressure position, the leading edge of the slide plate pushes the actuator of the 1st transfer pressure sensor.
- The actuator blocks the 1st transfer pressure sensor and the slide plate movement is detected.
- The 1st transfer pressure clutch is turned OFF.
- The cam will stop rotating and the siding plate will stop.
- The 1st transfer roller (Y, M, and C) will stay being pressed.

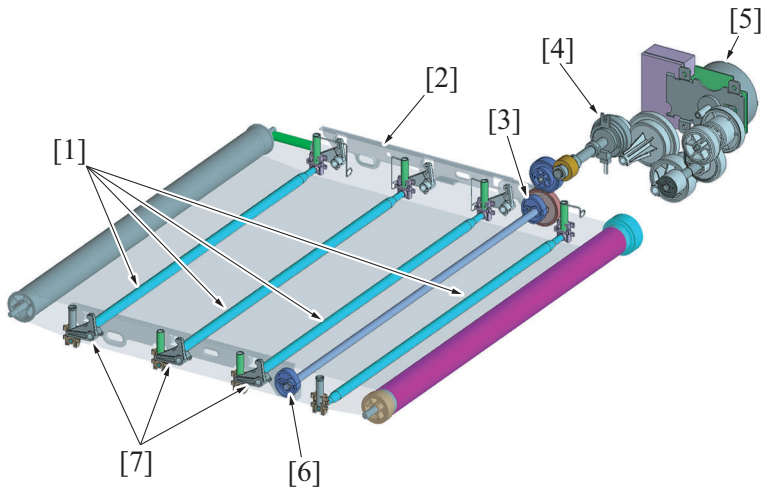


| | | | |
|---|---|---|---|
| [1] | 1st transfer roller Y/M/C/K | [2] | Slide plate |
| [3] | Pressure cam | [4] | 1st transfer pressure clutch (CL5) |

| | | | |
|---|---|---|---|
| [5] | Fusing motor (M3) | [6] | Pressure cam |
| [7] | 1st transfer roller drive arm Y/M/C/K | - | - |

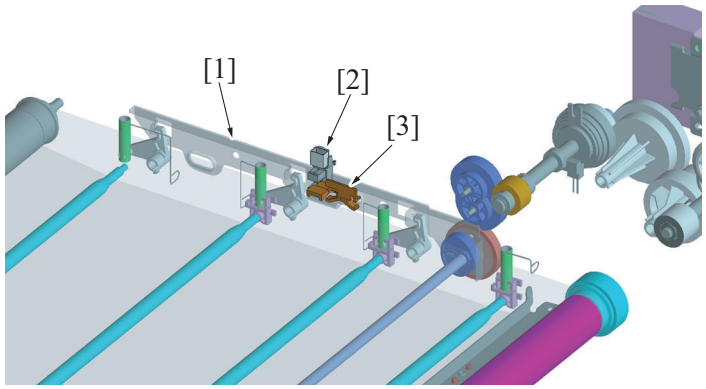


| | | | |
|---|---|---|---|
| [1] | Slide plate | [2] | 1st transfer pressure sensor (PS39) |
| [3] | Actuator | - | - |

### 7.3.3 Pressure/retraction control by print mode

- To extend the service life of the PC drum/Y, M, C, the transfer belt is retracted from the color PC drum in the black mode.
- In the black mode, the 1st transfer roller/Y, M, C is retracted and the color drum unit and color developing unit are stopped.
- The 1st transfer roller/K is pressed against the PC drum/K at all times in both black and color modes.

#### (1) Color mode

- In the color mode, the 1st transfer roller is where the PC drum is pressed against the transfer belt for all four colors of toner.

#### (2) Black mode

- In the black mode, the 1st transfer roller/Y, M, C is where the PC drum/Y, M, C leaves the transfer belt, while the 1st transfer roller/K is where the PC drum/K is pressed against the transfer belt. This allows the PC drum/Y, M, C to stop rotating in this mode.

Color mode

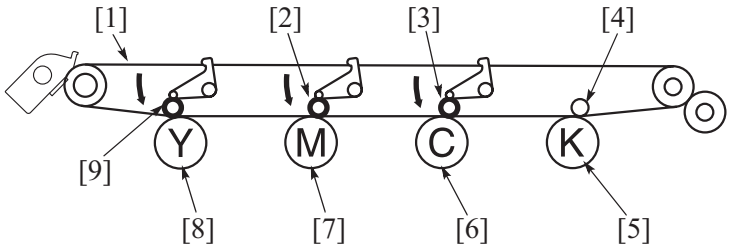


| | | | |
|---|---|---|---|
| [1] | Transfer belt | [2] | 1st transfer roller/M |
| [3] | 1st transfer roller/C | [4] | 1st transfer roller/K |
| [5] | Photo conductor/K | [6] | Photo conductor/C |
| [7] | Photo conductor/M | [8] | Photo conductor/Y |
| [9] | 1st transfer roller/Y | - | - |

Black mode

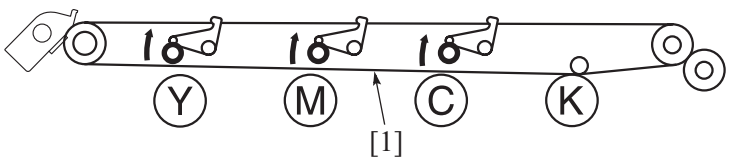


| | | | |
|---|---|---|---|
| [1] | Transfer belt (retraction position) | - | - |

#### (3) ACS mode

##### (a) ACS mode overview

- When making a copy, any desired copy mode can be selected from the control panel.
  (The default setting is the “auto color mode”.)
  The auto color mode is called the ACS (auto color selection) mode. (In PC print job, auto color as the setting item in the printer driver corresponds to the ACS.)
- In ACS mode, the machine analyzes the image data of the original scanned by the “scanner section” to determine whether the image data is colored or in black.

- Determining that it is a color original, the machine presses the 1st transfer roller and runs a color print job.
- Determining that it is a black original, the machine retracts the 1st transfer roller and runs a black print job.

### (b) Control of 1st transfer roller in ACS mode

- The number of sheets of continuous series of black originals is counted when color originals are changed to black originals.
- Pressure of the 1st transfer roller is controlled according to the number of sheets of continuous series of black originals during a multi-print cycle, thereby achieving both high print productivity and extended service life of consumables.
- "Control of 1st transfer roller in ACS mode" is executed only when a copy is made with "Auto Color" selected from the control panel. It is not executed when "Full Color", "Black", "2 Color", or "Single Color" is selected.
- The control is executed, for "PC print", only if the print cycle is run with "Auto Color" selected from the printer driver screen. It is not executed when "Full Color" or "Grayscale" is selected.
- The 1st transfer roller /Y, M, C is in the pressed position (color mode) in its initial state.

**NOTE**

- **The control of 1st transfer roller in the ACS mode is enabled only after the number of sheets of continuous series of black originals has been counted. It is therefore not an effective control for a copy print job involving only one copy set/stack. The control is effectively operable for the following print jobs: Since on the first copy, the control can be performed only for where the original is read and counted.**
  **"Copy print of the second copy set/stack and onward"**
  **"Copy print from a registered job"**
  **"PC print job"**

### (c) When the number of multi-copies is as specified or under

- ACS control starts counting the number of multi-copies of the black original when switched from the color original to the black original.
- The black printing will start with color mode. (with the 1st transfer roller /Y/M/C being pressed)
  Developing or transfer does not take place with the developing unit (Y, M, C), but, since the transfer belt is pressed, the PC drum and the developing roller are rotated as the transfer belt rotates.
  An advantage during pressure of the 1st transfer roller/Y, M, C is that the loss time produced as a result of retraction of the 1st transfer roller can be reduced relative to print productivity.

### (d) When the number of multi-copies is as specified or over

- The black printing will start when the color mode is complete and the 1st transfer roller /Y/M/C is retracted to be switched to the black mode.
  An advantage during retraction of the 1st transfer roller is that chance of the developing unit (Y, M, C) and drum unit (Y, M, C) being worn as a result of wasteful rotation can be reduced.

When printing in black with color mode (effecting black printing with the four PC drums rotating)

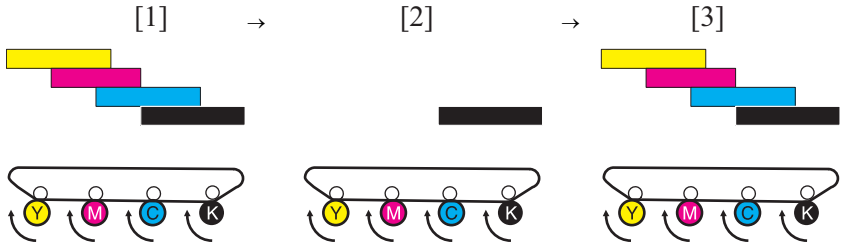


| | | | |
|---|---|---|---|
| [1] | Color mode | [2] | Color mode |
| [3] | Color mode | - | - |

Printing after switched to black mode

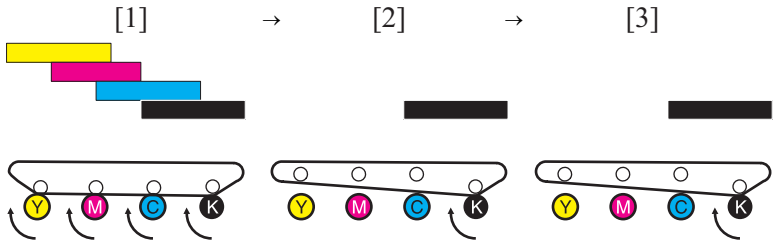


| | | | |
|---|---|---|---|
| [1] | Color mode | [2] | Black mode |
| [3] | Black mode | - | - |

### (e) C368/C308/C258 black original specified values

- Number of multiple black originals during plain paper printing

| Paper length | Black printing in color mode | Black printing after switched to black mode |
|---|---|---|
| 216 mm or less | 4 sheets or less | 5 sheets or more |
| Over 216 mm and up to 297 mm | 2 sheets or less | 3 sheets or more |
| Over 297 mm and up to 381 mm | 2 sheets or less | 3 sheets or more |
| Over 381 mm and up to 432 mm | 2 sheets or less | 3 sheets or more |
| Over 432 mm and up to 457 mm | 2 sheets or less | 3 sheets or more |

| | |
|---|---|
| Over 457 mm | Switched to black mode |

### (4) ACS mode control change with the software SW

- By changing the software SW 50 setting from "[00000000] at Bit assignment/ [00] at HEX assignment" to "[00000001] at Bit assignment/ [01] at HEX assignment", you can change the pressure control of the 1st transfer rollers.
- When the software SW 50 is set to "[00000001] at Bit assignment/ [01] at HEX assignment", the 1st transfer roller's default position is changed to the black mode (retracted position). When the setting is "[00000000] at Bit assignment/ [00] at HEX assignment", the default position of the 1st transfer roller/Y, M, C is at the color mode (pressed position).
- For users who mainly produce black prints, when "[00000001] at Bit assignment/ [01] at HEX assignment" is selected, the 1st transfer roller/Y, M, C can be at the retracted position more frequently, which helps to reduce the wearing out of PC drums caused by unnecessary rotation of color developing units and color drum units. The disadvantage of the setting ("[00000001] at Bit assignment/[01] at HEX assignment") is that the first copy time becomes longer for color print as the 1st transfer roller/Y, M, C is moved from the color mode to the black mode. Reduced productivity of the multi-print cycle could result depending on the condition.

#### (a) Case 1

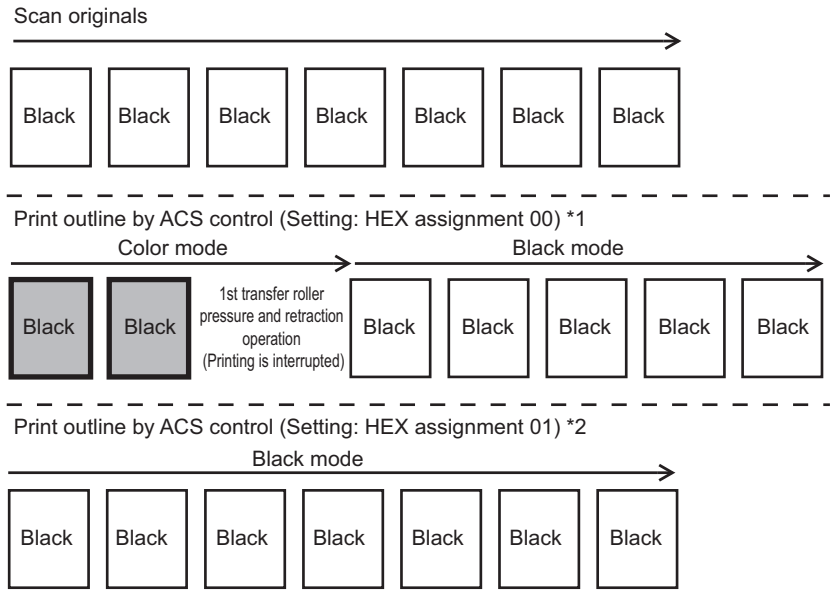


- *1: After printing black originals in the color mode, if the machine judges there are black originals more than a specified number, the 1st transfer roller/Y, M, C are switched to the black mode and black printing is resumed.
- *2: The 1st transfer rollers/Y, M, C remain in the black mode and black printing is made.

#### (b) Case 2

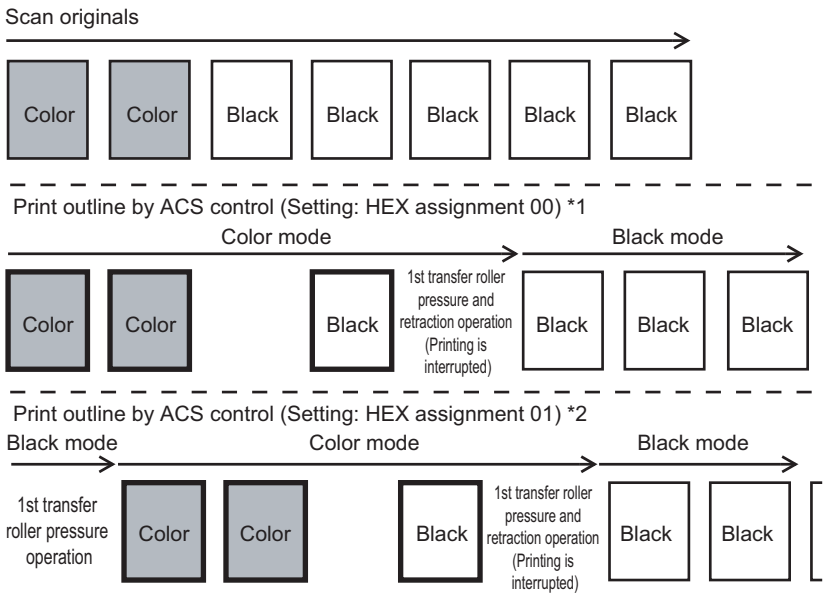

- *1: The 1st transfer roller/Y, M, C remains at the color mode and the color originals are printed in the color mode. If a machine interprets that there are black originals more than a predetermined number, the 1st transfer roller/Y, M, C is switched to the black mode and black printing is resumed.
- *2: The 1st transfer roller/Y, M, C is switched to the color mode and the color originals are printed in the color mode. If a machine interprets there are black originals more than a predetermined number, the 1st transfer roller/Y, M, C is switched to the black mode and black printing is resumed.

### 7.3.4 1st transfer control

- To transfer the toner image formed on the surface of the PC drum onto the transfer belt, the transfer current supplied from the high voltage unit is applied to the 1st transfer roller of each color.

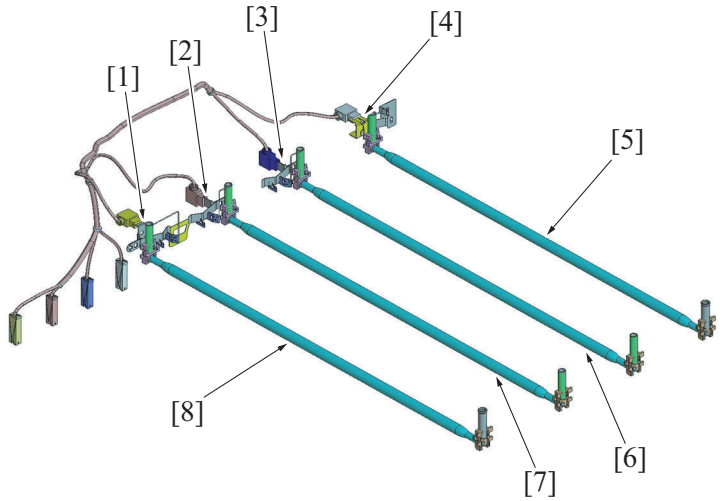


| | | | |
|---|---|---|---|
| [1] | 1st transfer current application terminal/Y | [2] | 1st transfer current application terminal/M |
| [3] | 1st transfer current application terminal/C | [4] | 1st transfer current application terminal/K |
| [5] | 1st transfer roller/K | [6] | 1st transfer roller/C |
| [7] | 1st transfer roller/M | [8] | 1st transfer roller/Y |

### 7.3.5 Transfer belt cleaning

- The toner image on the surface of the transfer belt is transferred onto the paper. (2nd transfer)
- Part of the toner image is left on the surface of the transfer belt after the 2nd transfer. A cleaning blade is provided on the transfer belt. It functions to remove the residual toner (waste toner).

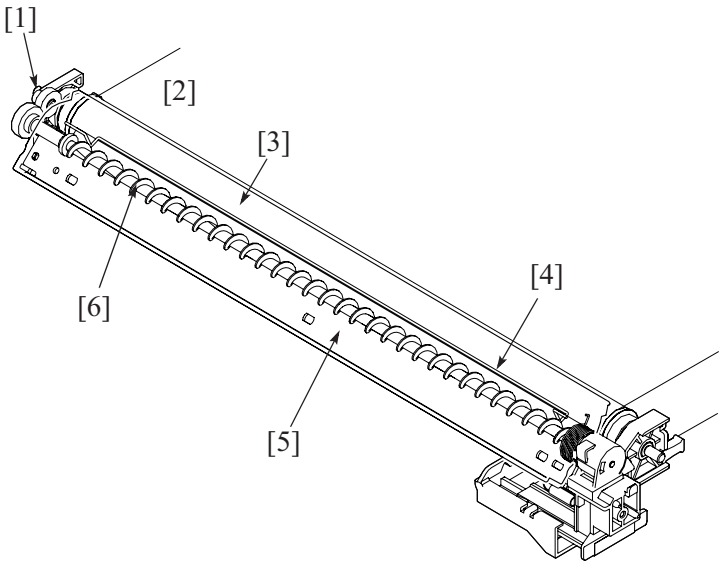


| | | | |
|---|---|---|---|
| [1] | Drive transmission gear | [2] | Transfer belt |
| [3] | Transfer belt driven roller | [4] | Caking-of-toner prevention blade |
| [5] | Cleaning blade | [6] | Toner collecting screw |

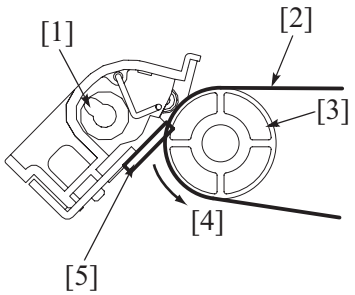


| | | | |
|---|---|---|---|
| [1] | Toner collecting screw | [2] | Transfer belt |
| [3] | Transfer belt driven roller | [4] | Transfer belt rotative direction (forward rotation) |
| [5] | Cleaning blade | - | - |

### (1) Cleaning blade

- The cleaning blade, of a fixed blade type, is pressed up against the surface of the transfer belt at all times. No cleaning blade retraction mechanism is provided.
- The waste toner on the surface of the transfer belt is scraped off as the transfer belt is rotated.

### (2) Waste toner conveying/collecting mechanism

- Drive for the toner collecting screw comes from the transfer belt driven roller. (The toner collecting screw rotates in time with rotation of the transfer belt.)
- The rotation of the toner collecting screw conveys waste toner scraped off the surface of the transfer belt toward the front of the machine.
- There is a caking-of-toner prevention blade installed. It prevents waste toner from caking at the toner collecting screw portion.
- The waste toner is discharged through the toner collecting port into the waste toner box.
- The waste toner is disposed of when a waste toner box which is detected to be full of waste toner is replaced with a new one and the used waste toner box is discarded.

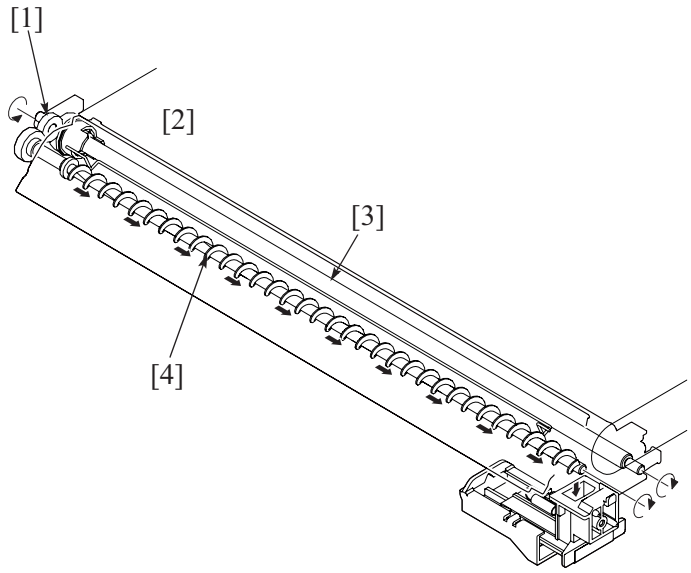


| | | | |
|---|---|---|---|
| [1] | Drive connecting gear | [2] | Transfer belt |
| [3] | Transfer belt driven roller | [4] | Toner collecting screw |

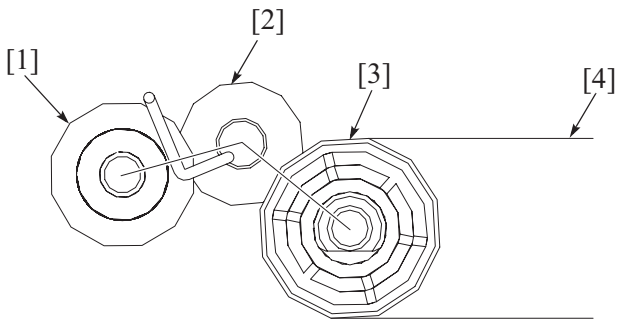

| | | | |
|---|---|---|---|
| [1] | Toner collecting screw | [2] | Drive connecting gear |
| [3] | Transfer belt driven roller | [4] | Transfer belt |

### 7.3.6 Waste toner spillage prevention shutter

- The toner collecting port is provided with a waste toner spillage prevention shutter that prevents waste toner from spilling during removal or reinstallation of the waste toner box.
- Mounting the waste toner box pushes the shutter at the toner collecting port, opening the toner collecting port. The shutter is closed by the waste toner box removal and prevents the toner spilling from the toner collecting port.

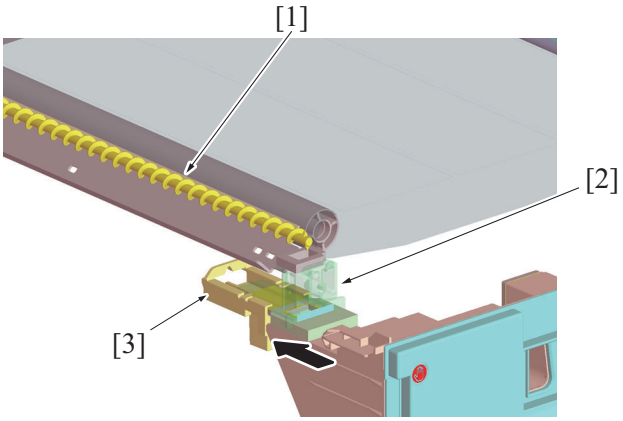


| | | | |
|---|---|---|---|
| [1] | Toner collecting screw | [2] | Toner collecting port |
| [3] | Shutter | - | - |

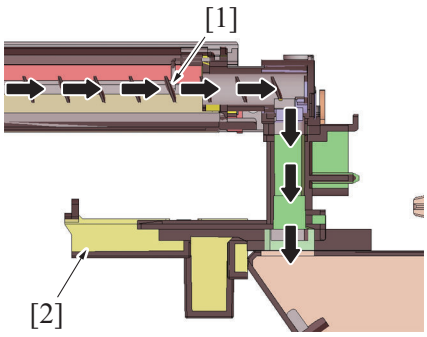


| | | | |
|---|---|---|---|
| [1] | Toner collecting screw | [2] | Shutter (open) |

### 7.3.7 Transfer belt cooling

- The transfer belt cleaner cooling fan is provided to circulate air through the inside of the machine, so that the areas around the developing unit, drum unit, toner hopper, and the transfer belt unit can be cooled.

#### (1) Air flow path

- Air around the developing unit and drum unit is drawn in.
- The air drawn in flows between the toner bottle and the transfer belt unit and is blown against the toner bottle/K.

#### (2) Transfer belt cleaner cooling fan rotation start timing

- The transfer belt cleaner cooling fan rotates at full speed under any of the following conditions:
  “During a print cycle”
  “During predrive after the power is turned ON”
  “During execution of image stabilization control”

#### (3) Transfer belt cleaner cooling fan rotation stop timing

- The transfer belt cleaner cooling fan stops rotating under any of the following conditions:
  “Upon completion of a print cycle”
  “Upon completion of predrive performed when the power is turned ON”
  “Upon completion of image stabilization control”

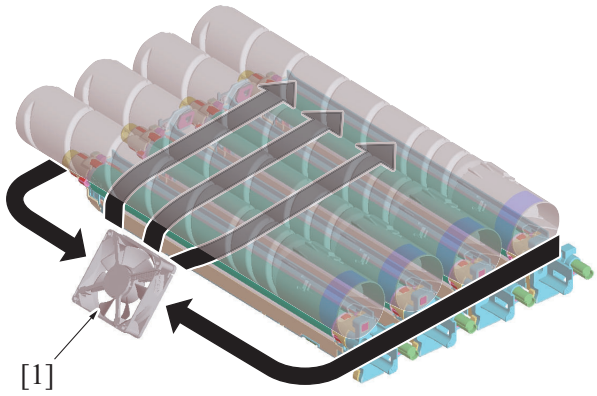


| | | | |
|---|---|---|---|
| [1] | Transfer belt cleaner cooling fan (FM2) | - | - |

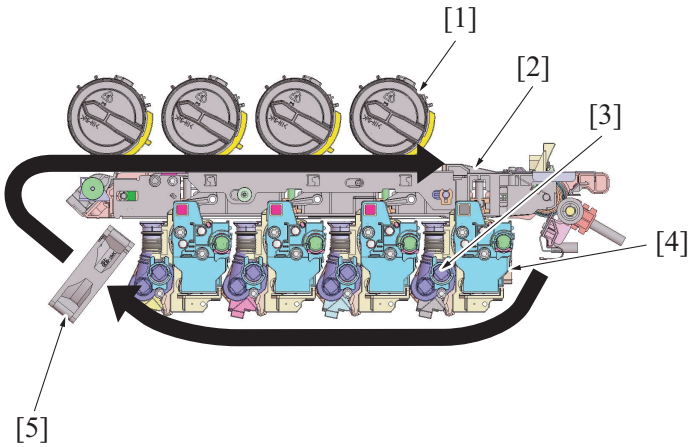


| | | | |
|---|---|---|---|
| [1] | Toner cartridge | [2] | Transfer belt unit |
| [3] | Developing unit | [4] | Drum unit |
| [5] | Transfer belt cleaner cooling fan (FM2) | - | - |

### 7.3.8 Cleaning blade foreign matter removal control

- The transfer belt is rotated backward to a small extent and then rotated forward to remove foreign matter (dust, toner, etc.) wedged between the transfer belt and the edge of the cleaning blade.

#### (1) Operation timing

- The backward rotation control is provided at the completion of every print job.

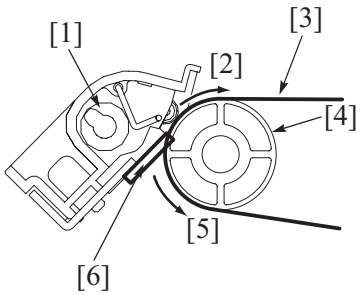


| | | | |
|---|---|---|---|
| [1] | Toner collecting screw | [2] | Backward rotation |
| [3] | Transfer belt | [4] | Transfer belt driven roller |
| [5] | Forward rotation | [6] | Cleaning blade |

### 7.3.9 Transfer belt new article detection

- The transfer belt unit is not provided with any new article detection mechanism. If the transfer belt is replaced with a new one, therefore, “New Release” must be performed in “Counter/ Life” of the Service Mode. For detailed operating procedures, see “I.5.17.2 Life”.

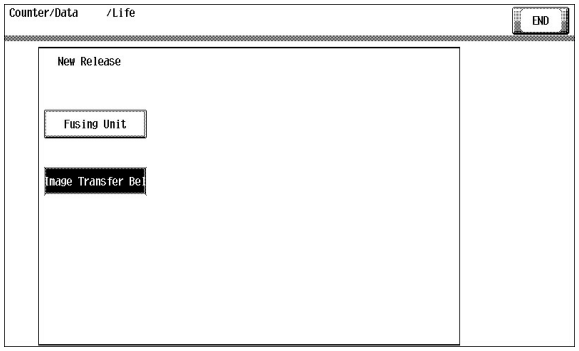


### 7.3.10 Transfer belt life detection

**NOTE**

- **On this machine, [Display] is specified by default for the life display.**
- **[Off] is specified by default for the life stop display, when the life stop is reached this machine does not stop and printing is possible.**
- **To confirm the life of each unit from the Life value of consumables and parts, and from [Service Mode] -> [Counter] -> [Life].**

#### (1) Counter life determination

- Each of the printed counter and the transfer belt rotation time counter has its own threshold value to determine its own life. If the printed counter or transfer belt rotate time counter value reaches the threshold, the machine determines that the transfer belt unit has reached a new state.

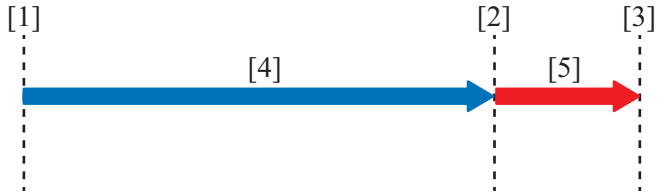


| | | | |
|---|---|---|---|
| [1] | New article (starts to be used) | [2] | Life display |
| [3] | Life stop display | [4] | Image guaranteed range |
| [5] | Outside image guaranteed range | - | - |

#### (2) Life detection

- The life has been reached when either the print counter or the transfer belt rotation time counter value has reached the life threshold value.

##### (a) Life display setting

- On this machine, since the life display is specified to [Display] by default, a display appears when the life is reached. Configure the reaching life display settings as necessary. [Service Mode] -> [System 2] -> [Unit Change] -> [Near Life Display Settings]

#### (3) Life stop detection

- The life is stopped when either the print counter or the transfer belt rotation time counter value has reached the life stop threshold value.

##### (a) Life stop display setting

- On this machine, since the life display and the life stop are specified to [Off] by default, a warning display does not appear and the print job does not stop even when the life is reached.
- Configure the life stop settings as necessary. [Service Mode] -> [Enhanced Security] -> [Life Stop Setting]

##### (b) Life stop display

- When it reached the life stop, and the life display is specified to [On] with the life stop display settings, the life warning appears and the print job is prohibited.

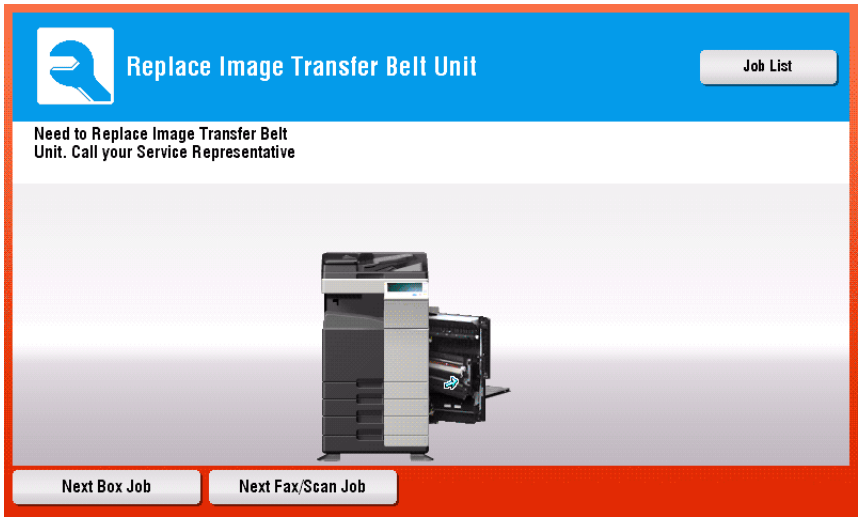
Replace Image Transfer Belt Unit
Job List
Need to Replace Image Transfer Belt Unit. Call your Service Representative
Next Box Job
Next Fax/Scan Job

# 8. 2ND TRANSFER SECTION

## 8.1 Configuration

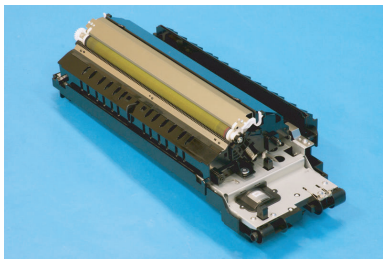

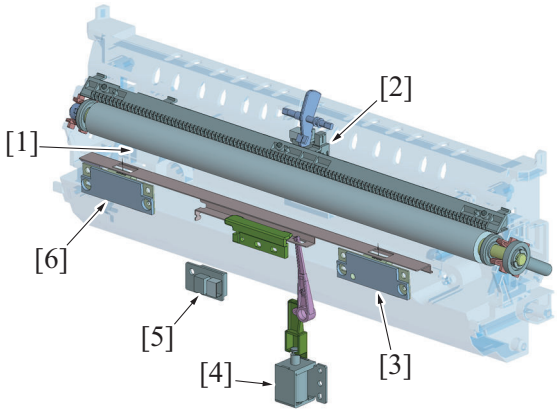


| | | | |
|---|---|---|---|
| [1] | 2nd transfer roller | [2] | Fusing loop sensor (PS2) |
| [3] | IDC sensor/Fr (IDCS/Fr) | [4] | IDC sensor shutter solenoid (SD2) |
| [5] | Temperature/humidity sensor (TEM/HUMS) | [6] | IDC sensor/Rr (IDCS/Rr) |

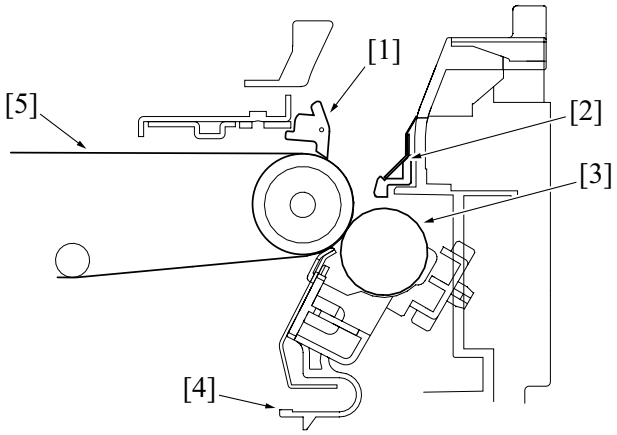


| | | | |
|---|---|---|---|
| [1] | Separation claw | [2] | Charge neutralizing needle |
| [3] | 2nd transfer roller | [4] | 2nd transfer roller lock release lever |
| [5] | Transfer belt | - | - |

## 8.2 Drive

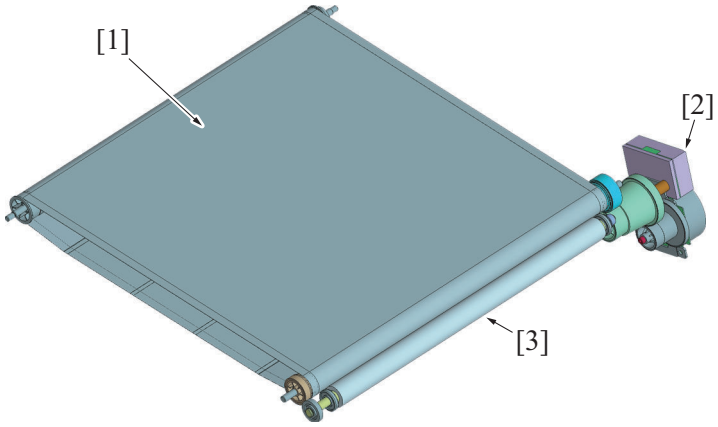


| | | | |
|---|---|---|---|
| [1] | Transfer belt | [2] | Transport motor (M1) |
| [3] | 2nd transfer roller | - | - |

## 8.3 Operation

### 8.3.1 2nd transfer control

- To transfer the toner image formed on the transfer belt onto the paper, the 2nd transfer voltage supplied from the high voltage unit is applied to the 2nd transfer roller.
- Resistance of the 2nd transfer roller changes with an environmental change, durability, and other factors. To maintain an optimum output voltage, fixed current is passed through the 2nd transfer roller and the voltage being outputted at that time is detected. An appropriate 2nd transfer voltage is determined based on the measured voltage and other information such as “type of paper used”, “temperature and humidity”, “color mode or black mode”, and “1-sided/2-sided”.

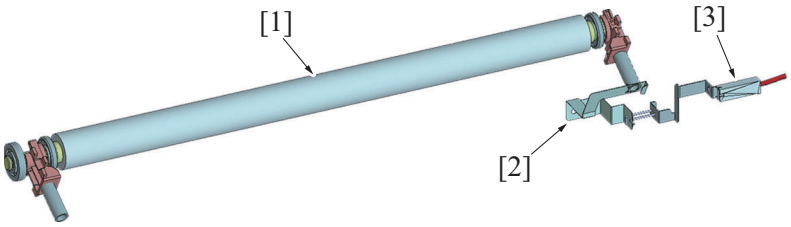


| | | | |
|---|---|---|---|
| [1] | 2nd transfer roller | [2] | 2nd transfer voltage conductive plate |
| [3] | 2nd transfer voltage application terminal | - | - |

#### (1) Execution timing

- The 2nd transfer control is executed when a print job is received under any of the following conditions:
  “Main power switch is turned ON”
  “Power key is pushed”
  “The machine exits the sleep mode”
  “The threshold value of a change in machine interior temperature is exceeded.”

#### (2) 2nd transfer control during image stabilization control

- In this machine, the 2nd transfer roller does not have a retraction mechanism, so that the transfer belt and 2nd transfer roller are pressed up against each other at all times.
- During image stabilization control, a toner image for adjustment purpose is formed on the surface of the transfer belt. A negative voltage is therefore applied to the 2nd transfer roller during image stabilization control. The amount of toner sticking to the 2nd transfer roller is thereby reduced.

### 8.3.2 Control of toner application to 2nd transfer roller

- In this machine, the 2nd transfer roller does not have a retraction mechanism, so that the transfer belt and 2nd transfer roller are pressed up against each other at all times.
- If a new 2nd transfer roller that has replaced an old one is left to stand idle for a long period of time, a substance contained in the new roller sticks to the surface of the transfer belt, which could result in noise in the print image.

- To prevent the substance contained in the 2nd transfer roller from sticking to the transfer belt, Y toner is applied to the surface of a new 2nd transfer roller at the time of replacement. (The Y toner image that corresponds to two complete revolutions of the transfer roller is formed on the surface of the transfer belt and is then transfer red onto the surface of the 2nd transfer roller.)
- The Y toner that is less noticeable is used for the toner to be applied, in consideration of back marking.

**(1) Execution timing**

- The control is executed when the life counter of the 2nd transfer roller in the service mode is reset to zero.

### 8.3.3 2nd transfer roller cleaning

- In order to remove the remaining toner on the 2nd transfer roller, -/+ (DC) charge is applied alternately to transfer the remaining toner on the 2nd transfer roller to the transfer belt. (The number of times that electrical charge is applied to the 2nd transfer roller is different depending on each situation.)
- The cleaning blade then scrapes off the toner on the surface of the transfer belt.

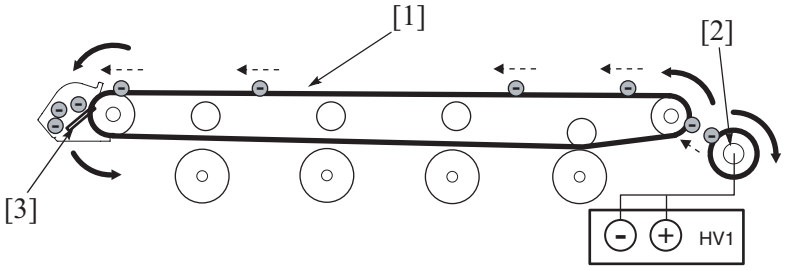


| | | | |
|---|---|---|---|
| [1] | Transfer belt | [2] | 2nd transfer roller |
| [3] | Cleaning blade | - | - |

### 8.3.4 Charge neutralization and separation of paper

- To neutralize any residual potential on the paper which has undergone the 2nd transfer process, there is a charge neutralizing needle mounted on the guide plate after the 2nd transfer roller. There is a resin guide that prevents the electrode from directly contacting the paper.
- The residual potential neutralized by the charge neutralizing needle is grounded via a conductive plate.
- In order to separate the paper from the transfer belt without fail after the 2nd transfer, a separation claw is mounted (center one point.)

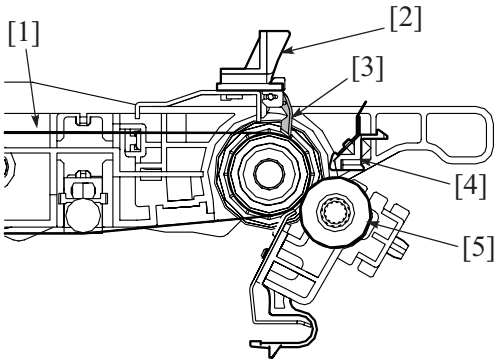


| | | | |
|---|---|---|---|
| [1] | Transfer belt | [2] | Paper winding prevention guide |
| [3] | Separation claw | [4] | Charge neutralizing needle |
| [5] | 2nd transfer roller | - | - |

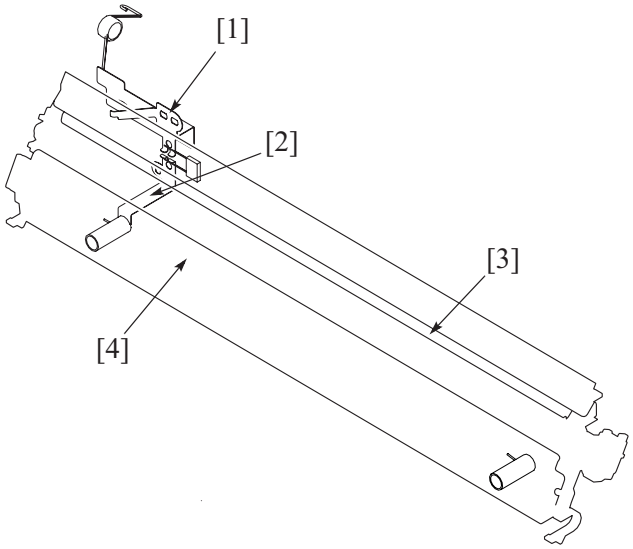


| | | | |
|---|---|---|---|
| [1] | Charge neutralizing needle conductive plate (ground) | [2] | Transfer paper guide conductive plate (ground) |

| | | | |
|---|---|---|---|
| [3] | Charge neutralizing needle | [4] | Transfer paper guide |

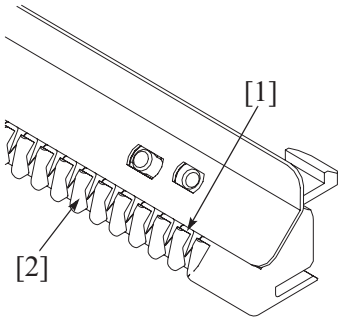


| | | | |
|---|---|---|---|
| [1] | Charge neutralizing needle | [2] | Resin guide |

### 8.3.5 Paper winding prevention guide

- The paper winding prevention guide prevents paper from being wound around the transfer belt again after its being separated from the transfer belt by the separation claw.

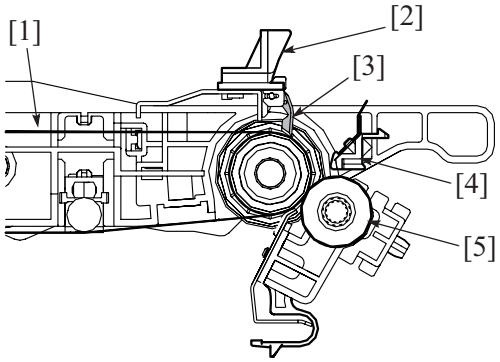


| | | | |
|---|---|---|---|
| [1] | Transfer belt | [2] | Paper winding prevention guide |
| [3] | Separation claw | [4] | Charge neutralizing needle |
| [5] | 2nd transfer roller | - | - |

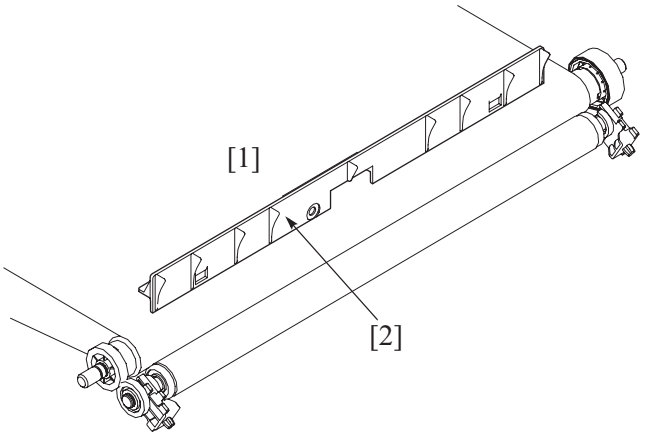


| | | | |
|---|---|---|---|
| [1] | Transfer belt | [2] | Paper winding prevention guide |

### 8.3.6 IDC sensor protection

- The IDC sensor can be contaminated with toner since it is located under the transfer belt. There is a shutter mechanism provided for the sensor to prevent it from being contaminated.
- The shutter is opened or closed by the IDC sensor shutter solenoid.

| IDC sensor shutter solenoid (SD2) | Shutter |
|---|---|
| OFF | Closed |
| ON | Open |

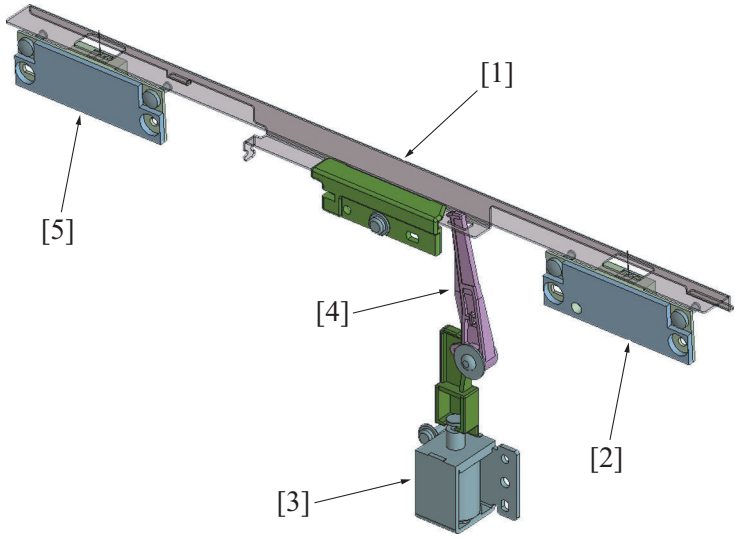


| | | | |
|---|---|---|---|
| [1] | IDC sensor shutter (open position) | [2] | IDC sensor/Fr (IDCS/Fr) |
| [3] | IDC sensor shutter solenoid (SD2) | [4] | Actuator for shutter |
| [5] | IDC sensor/Rr (IDCS/Rr) | - | - |

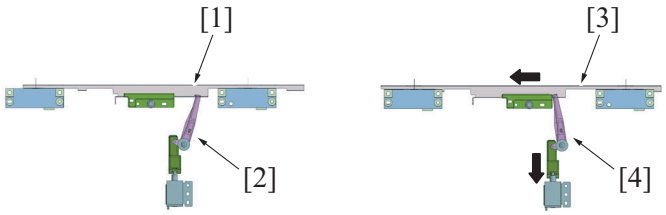


| | | | |
|---|---|---|---|
| [1] | IDC sensor shutter (close position) | [2] | IDC sensor shutter solenoid: OFF |
| [3] | IDC sensor shutter (open position) | [4] | IDC sensor shutter solenoid: ON |

### 8.3.7 2nd transfer roller new article detection

- The 2nd transfer roller (hereinafter referred to as the “transfer roller”) is not provided with any new article detection mechanism. If the transfer roller is replaced with a new one, therefore, “New Release” must be performed of the “Transfer Belt Unit” in “Counter/ Life” of the Service Mode. Performing “New Release” of the “Transfer Belt Unit” in life counter of the Service Mode will also reset the life counter of the transfer roller to zero.

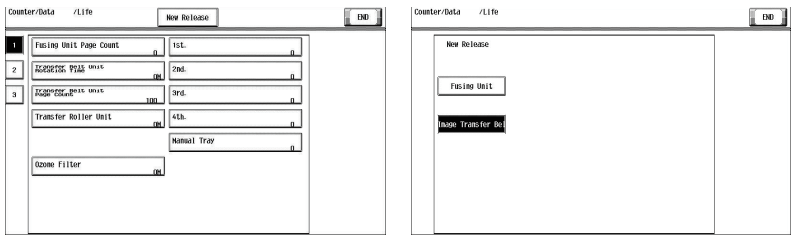


### 8.3.8 2nd transfer roller life detection

**NOTE**

- **On this machine, [Display] is specified by default for the life display.**
- **To confirm the life of each unit from the Life value of consumables and parts, and from [Service Mode] -> [Counter] -> [Life].**

#### (1) Counter life determination

- The life counter of the transfer roller controls detection of life of the 2nd transfer roller (hereinafter referred to as the “transfer roller”).
- The counter value is recorded in the eMMC board of the main body.

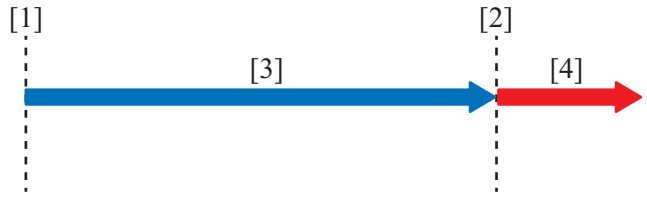


| | | | |
|---|---|---|---|
| [1] | New article (starts to be used) | [2] | Life display |
| [3] | Image guaranteed range | [4] | Outside image guaranteed range |

### (2) Life detection

- The life has been reached when the transfer roller counter value has reached the life threshold value.

#### (a) Life display setting

- On this machine, since the life display is specified to [Display] by default, a display appears when the life is reached. Configure the reaching life display settings as necessary. [Service Mode] -> [System 2] -> [Unit Change] -> [Near Life Display Settings]

### (3) Life stop detection

- The transfer roller does not detect the life stop.

# 9. TONER COLLECTING SECTION

## 9.1 Configuration

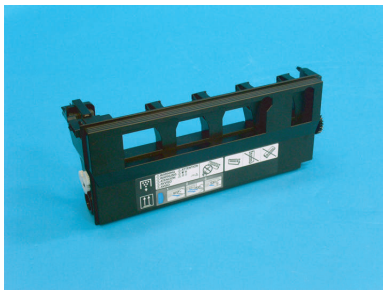

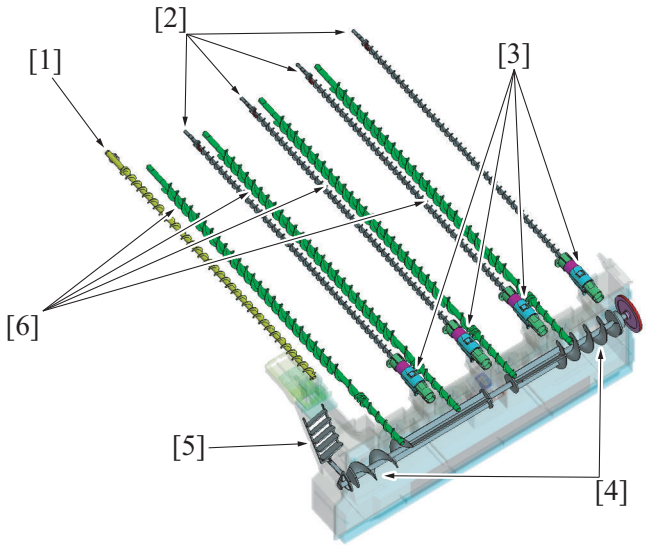


| | | | |
|---|---|---|---|
| [1] | Toner collecting screw (Transfer belt section) | [2] | Toner collecting screw (Drum unit/Y,M,C,K) |
| [3] | Toner collecting port (Drum unit/Y,M,C,K) | [4] | Toner collecting screw (Waste toner box) |
| [5] | Toner agitating blade | [6] | Toner supply screw (Developing unit) |

## 9.2 Drive

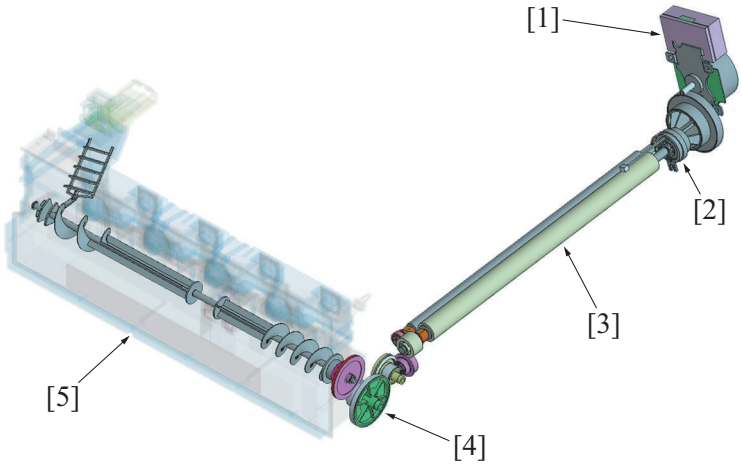


| | | | |
|---|---|---|---|
| [1] | Transport motor (M1) | [2] | Registration clutch (CL4) |
| [3] | Registration roller | [4] | Waste toner box drive gear |
| [5] | Waste toner box | - | - |

## 9.3 Operation

### 9.3.1 Waste toner box drive mechanism

- The waste toner box is driven by the transport motor.

- The driving force of the transport motor is transmitted to the registration roller via the registration clutch. The drive coupling gear mounted coaxially with the registration roller drives the waste toner box.

#### (1) Execution timing

- The waste toner box rotates in synchronism with the registration roller. For details on registration roller, see registration control section.

### 9.3.2 Control of waste toner conveyance through waste toner box

- Waste toner in the transfer belt unit and drum units, and excess toner in the developing unit are conveyed onto the waste toner box by the toner collecting screw.
- Waste toner and waste developer (waste carrier + waste toner) are collected through the toner collecting ports for the each units.
- The waste toner collecting port is provided with a toner agitating blade that prevents toner from stagnating.
- The toner agitating blade is moved up and down as the toner collecting screw rotates.
  * The toner collecting port for the developing unit is not provided with any toner agitating blade.
- Toner collecting screw 1 and toner collecting screw 2 (dedicated to the transfer belt toner collecting port) are installed in the waste toner box.
- The screws provided on toner collecting screw 1 function to convey waste toner stagnant in the box uniformly onto the central portion of the box.
- Toner collecting screw 2 functions to convey toner conveyed from the transfer belt unit uniformly onto the central portion of the box.
- There is a detection window for detecting a waste toner full condition provided at the central portion of the box. When the waste toner conveyed onto the central portion of the box exceeds a predetermined height, waste toner spills over the waste toner full condition detection section. For details, see “O.9.3.4 Waste toner box full detection”.

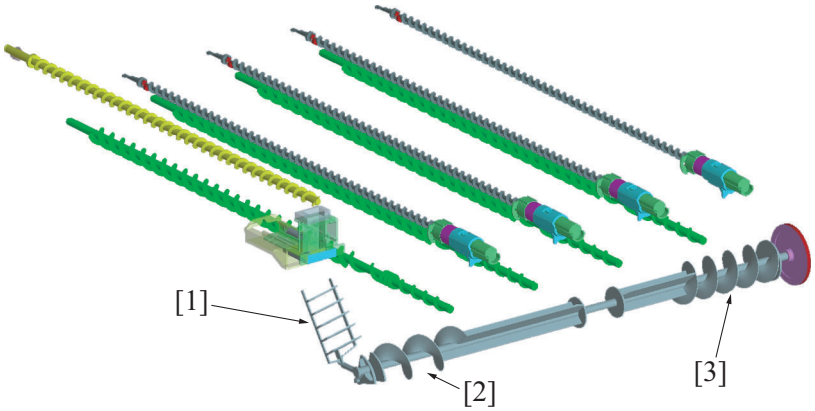


| | | | |
|---|---|---|---|
| [1] | Toner agitating blade | [2] | Toner collecting screw 2 (dedicated to the transfer belt toner collecting port) |
| [3] | Toner collecting screw 1 (Waste toner box) | - | - |

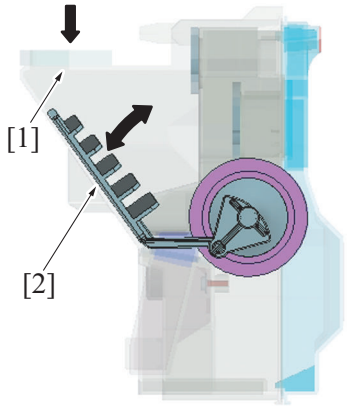


| | | | |
|---|---|---|---|
| [1] | Toner collecting port (Transfer belt unit) | [2] | Toner agitating blade |

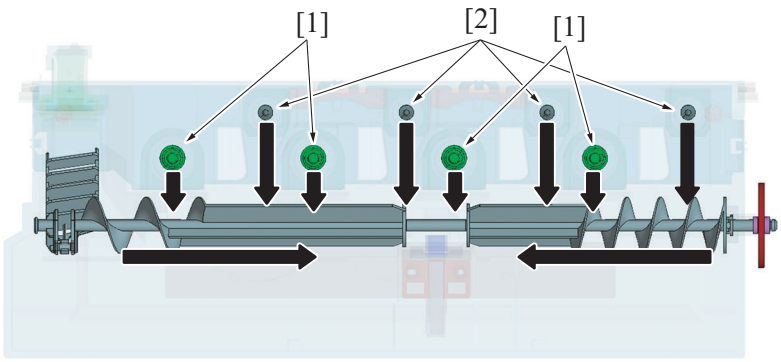


| | | | |
|---|---|---|---|
| [1] | Toner collecting port (Developing unit) | [2] | Toner collecting port (Drum unit) |

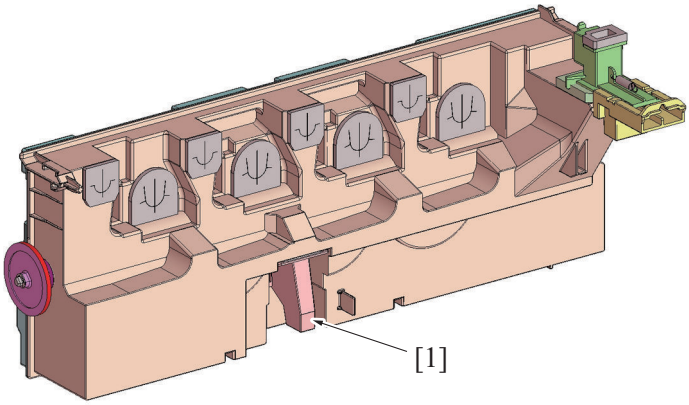


| | | | |
|---|---|---|---|
| [1] | Waste toner full condition detection window | - | - |

### 9.3.3 Waste toner box-in-position detection

- The waste toner box set sensor provided on the front side board detects mounting condition of the waste toner box. It prevents the machine from being operated with the waste toner box yet to be mounted in place.
- When the waste toner box is removed, the waste toner box set sensor is unblocked, which causes the machine to determine that the waste toner box is yet to be mounted.
- The machine, on determining that the waste toner box is yet to be mounted in place, prohibits initiation of a new print cycle.
- When the waste toner box is mounted, the waste toner box set sensor is blocked, which causes the machine to determine that the waste toner box is mounted in place.
- The machine, on determining that the waste toner box is mounted in place, resets the waste toner box yet-to-be-mounted display, enabling initiation of a new print cycle.

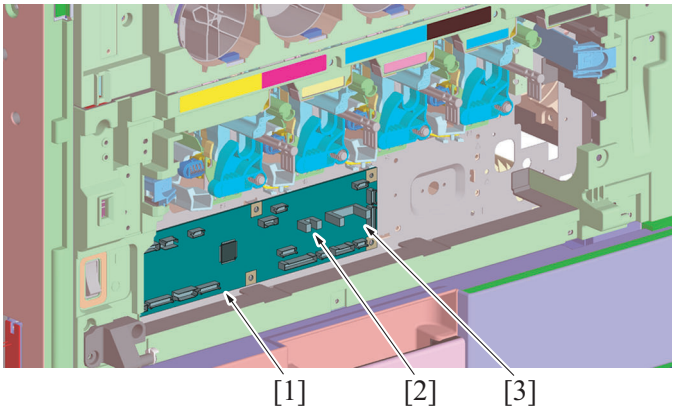


| | | | |
|---|---|---|---|
| [1] | Front side board (FRB) | [2] | Waste toner box set sensor (PS100) |
| [3] | Waste toner full sensor (PS101) | - | - |

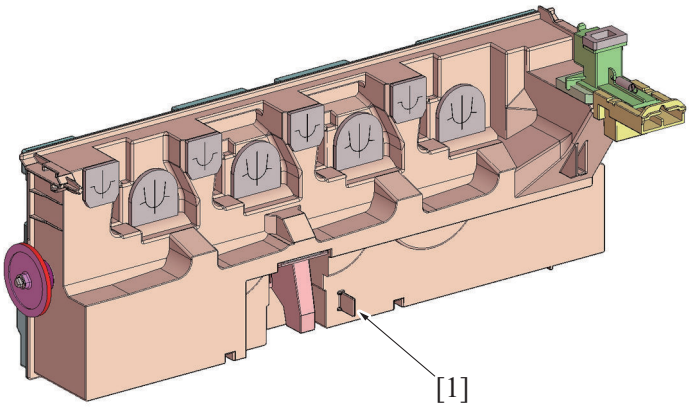


| | | | |
|---|---|---|---|
| [1] | Waste toner full box detection plate | - | - |

### (1) Execution timing

- The waste toner box full detection control is performed under any of the following conditions:
  “The power switch is turned ON”
  “The front door or right door is closed”

### (2) Waste toner box yet-to-be-mounted display

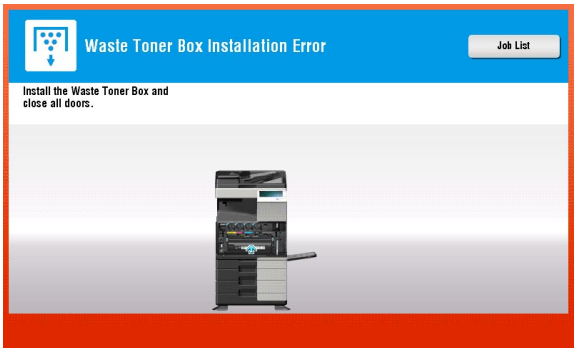


## 9.3.4 Waste toner box full detection

- The waste toner full sensor provided on the front side board is used to determine the amount of waste toner accumulated in the waste toner box.

### (1) Waste toner near-full

- The toner collecting screw provided in the waste toner box conveys waste toner in the box onto the central portion of the box. For details, see “O.9.3.2 Control of waste toner conveyance through waste toner box”.
- A detection window for detecting a waste toner full condition is equipped at the central portion of the waste toner box. When the waste toner conveyed onto the central portion of the box exceeds a predetermined height, waste toner spills over the waste toner full condition detection section.
- The machine determines that there is a waste toner near-full condition, if the waste toner full sensor is blocked by the waste toner stagnant over the waste toner full condition detection section for a predetermined period of time or longer.

#### (a) Execution timing

- The waste toner box near-full detection control is performed under any of the following conditions:
  “The machine determines that the waste toner box is mounted in place using the waste toner box set sensor.”
  “During a print cycle”
  “During execution of image stabilization control”

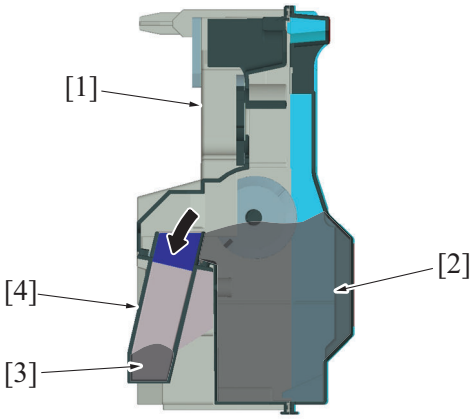


| | | | |
|---|---|---|---|
| [1] | Waste toner box | [2] | Waste toner |
| [3] | Waste toner | [4] | Waste toner full condition detection window |

### (2) Waste toner full condition

- When a waste toner near-full condition is detected, the “waste toner full detection counter” is incremented according to the image density information of the print image during each of subsequent print jobs.
- When the waste toner full detection counter reaches a threshold value, the machine determines that there is a waste toner full condition.

#### (a) Execution timing

- The waste toner box full detection control is performed under any of the following conditions:
  “The machine determines that the waste toner box is mounted in place using the waste toner box set sensor.”
  “The waste toner full sensor detects a waste toner near-full condition.”
  “During a print cycle”
  “During execution of image stabilization control”

### (3) Waste toner box life detection

| | | |
|---|---|---|
| Waste toner near-full | bizhub C368 | 31,000 sheets |
| | bizhub C308/C258 | 28,000 sheets |
| Waste toner full | bizhub C368 | 33,000 sheets |
| | bizhub C308/C258 | 30,000 sheets |

**NOTE**

- **The number of printed pages represents a value calculated from the toner consumption recorded when the machine is used in the standard job mode. It varies depending on how the user uses the machine.**
- **For details, see “F.5.2 Details of the life specifications”.**

### (4) Waste toner near-full and full displays

- The waste toner near-full display is given if the waste toner full sensor is blocked by the waste toner stagnant over the waste toner full condition detection section for a predetermined period of time or longer (though initiation of a new print cycle is enabled).
- When the waste toner full detection counter reaches the threshold value, the waste toner full display appears (and initiation of a new print cycle is prohibited).

**NOTE**

- **The contents of the waste toner near-full and waste toner full displays vary depending on the settings made in Consumable Life Reminder of the Service Mode.**

#### (a) Typical waste toner near-full display (typical)

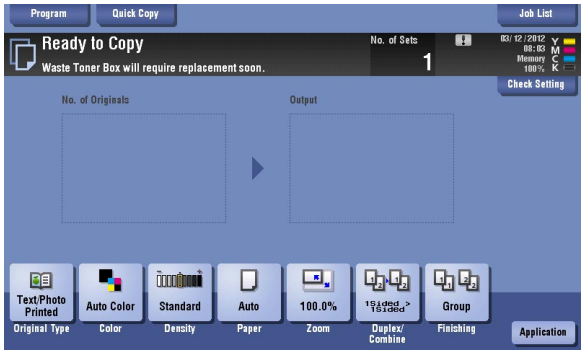

### (b) Typical waste toner full display (typical)

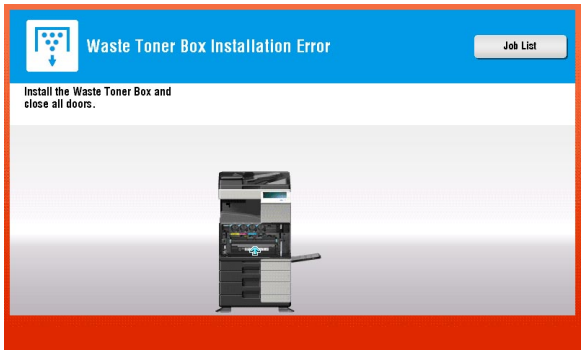


## 9.3.5 Waste toner box new article detection

- The waste toner box is not provided with any new article detection mechanism. Detection made by the waste toner full sensor is used for detecting a new waste toner box.
- When the waste toner full display appears, the existing waste toner box is replaced with a new one. When the waste toner full sensor remains unblocked for a predetermined period of time or more, the machine determines that the normal state is recovered (the old waste toner box is replaced with a new one).
- Determining that a new waste toner box has been mounted, the machine resets the waste toner full display, allowing the initiation of a new print cycle.

### (1) Timing at which to reset the waste toner full display

- The waste toner box full detection control is performed under any of the following conditions:
  “The waste toner full sensor detects a waste toner full condition.”
  “The power switch is turned ON”
  “The front door is closed”

## 9.3.6 Waste toner spillage prevention shutter

- The toner collecting port for the transfer belt unit is provided with a waste toner spillage prevention shutter that prevents waste toner that is transported from the transfer belt from spilling during removal or reinstallation of the waste toner box.
- Inserting the waste toner box into its mounting position pushes the shutter at toner collecting port of the waste toner box, thus opening the toner collecting port.
- Removing the waste toner box allows the shutter spring to close the shutter at the toner collecting port.

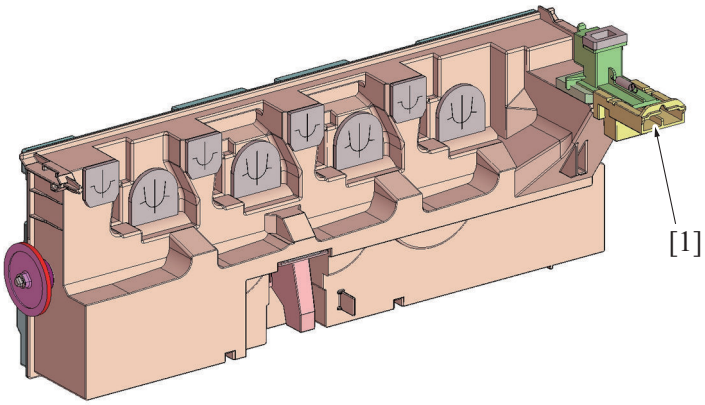


| | | | |
|---|---|---|---|
| [1] | Toner collecting port | - | - |

# 10. PAPER FEED SECTION (MANUAL BYPASS TRAY)

## 10.1 Configuration

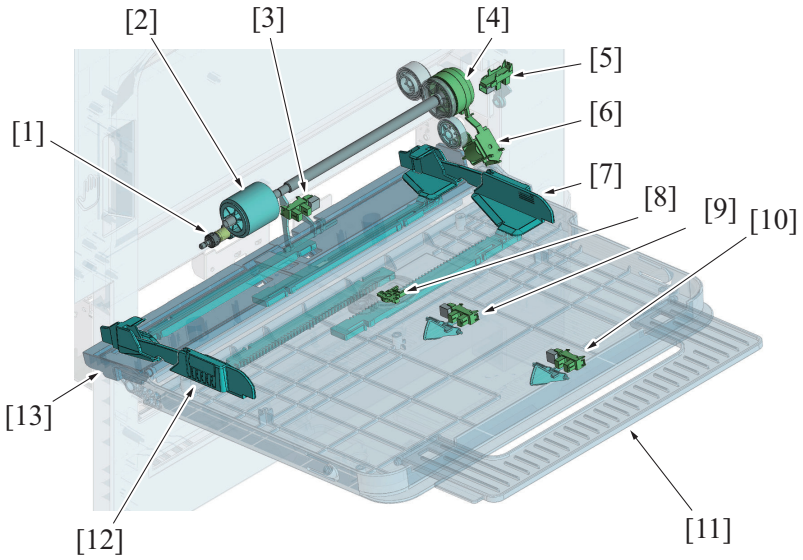


| | | | |
|---|---|---|---|
| [1] | Manual bypass tray separation roller | [2] | Manual bypass tray feed roller |
| [3] | Bypass paper empty sensor (PS27) | [4] | Bypass paper feed clutch (CL7) |
| [5] | Bypass lift-up position sensor (PS26) | [6] | Bypass pick-up solenoid (SD1) |
| [7] | Paper guide (rear side) | [8] | Bypass CD paper size VR (VR1) |
| [9] | Bypass FD paper size sensor/1 (PS28) | [10] | Bypass FD paper size sensor/2 (PS29) |
| [11] | Sub tray | [12] | Paper guide (front side) |
| [13] | Paper lift-up plate | - | - |

## 10.2 Drive

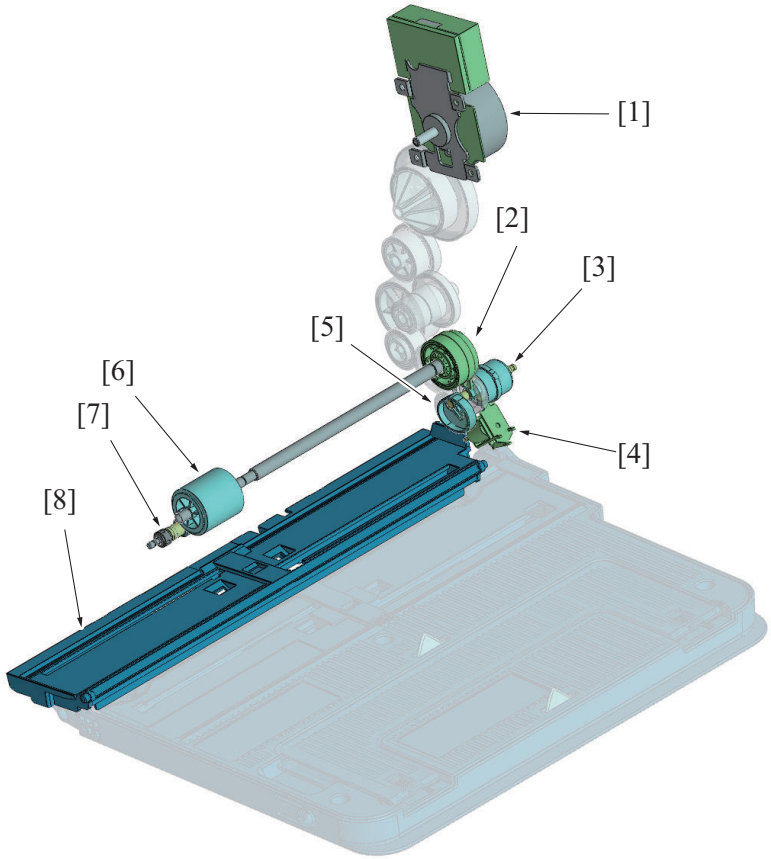


| | | | |
|---|---|---|---|
| [1] | Transport motor (M1) | [2] | Bypass paper feed clutch (CL7) |
| [3] | Paper lift-up plate clutch (mechanical) | [4] | Bypass pick-up solenoid (SD1) |
| [5] | Paper lift-up cam | [6] | Manual bypass tray feed roller |

| | | | |
|---|---|---|---|
| [7] | Manual bypass tray separation roller | [8] | Paper lift-up plate |

## 10.3 Operation

### 10.3.1 Up/down control

- The paper lift-up plate is moved up and down by the transport motor.

#### (1) Up operation

- The bypass pick-up solenoid is energized for a predetermined period of time during rotation of the transport motor. This unlocks the paper lift-up plate clutch and the driving force of the transport motor is transmitted to the paper lift-up cam.
- As the paper lift-up cam rotates, the paper lift-up plate which has so far been pushed down by the paper lift-up cam is raised to the paper feed position by the spring.

#### (2) Down operation

- The bypass pick-up solenoid is energized for a predetermined period of time during rotation of the transport motor. This rotates the paper lift-up cam, so that the cam pushes the paper lift-up plate down into its standby position.

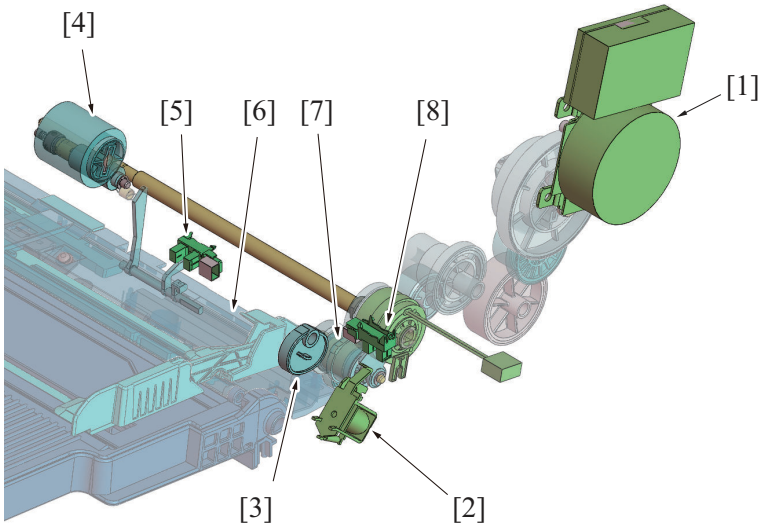


| | | | |
|---|---|---|---|
| [1] | Transport motor (M1) | [2] | Bypass pick-up solenoid (SD1) |
| [3] | Paper lift-up cam | [4] | Manual bypass tray feed roller |
| [5] | Bypass paper empty sensor (PS27) | [6] | Paper lift-up plate |
| [7] | Paper lift-up plate clutch (mechanical) | [8] | Bypass lift-up position sensor (PS26) |

#### (3) Operation timing

##### (a) Move to paper feed position (up)

- At the start of a manual bypass paper feed sequence, the paper lift-up plate is raised to the paper feed position.
- After the lapse of a predetermined period of time, the bypass pick-up solenoid is deenergized. The paper lift-up plate is stopped at the paper feed position.
- The actuator of bypass lift-up position sensor rotates in synchronism with the paper lift-up cam. When the paper lift-up plate is raised, the actuator rotates to thereby unblock the bypass lift-up position sensor. Then, the machine determines that the paper lift-up plate is raised to the paper feed position.
- If the bypass lift-up position sensor remains unblocked even after the bypass pick-up solenoid has been deenergized, the machine determines that the paper lift-up plate is at the paper feed position.
- As the paper level lowers during paper feed, the spring pushes up the paper lift-up plate, so that the paper stack is pushed up to the optimum paper feed position.

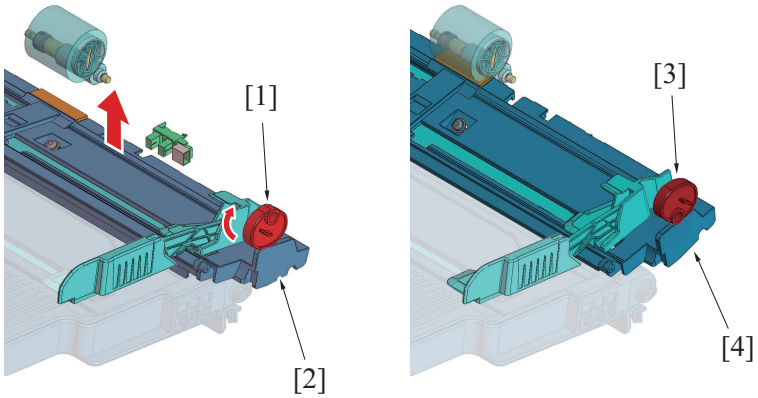


| | | | |
|---|---|---|---|
| [1] | Paper lift-up cam (standby position) | [2] | Paper lift-up plate (standby position) |

| | | | |
|---|---|---|---|
| [3] | Paper lift-up cam (paper feed position) | [4] | Paper lift-up plate (paper feed position) |

#### (b) Move to standby position (down)

- The paper lift-up plate is lowered if there is no print job that uses the manual bypass trays and the paper exit sensor detects a sheet of paper fed from the manual bypass tray.
- The paper lift-up plate is lowered if the above conditions are met even during execution of another job.
- If a bypass paper empty condition is detected at the paper feed position, the paper lift-up plate is lowered to the standby position.
- If a paper misfeed occurs, the paper lift-up plate is stopped at the paper feed position. When the transport motor rotates stably after the misfeed is cleared, the paper lift-up plate is lowered to the standby position.
- After the lapse of a predetermined period of time, the bypass pick-up solenoid is deenergized. The paper lift-up plate is stopped at the standby position. As the paper lift-up plate lowers, the bypass lift-up position sensor is blocked. The machine determines that the paper lift-up plate is at the standby position based on the fact that the bypass lift-up position sensor is blocked even after the bypass pick-up solenoid has been deenergized.

### 10.3.2 Paper feed control

#### (1) Pick-up control

- Paper feed operations of the manual bypass tray are driven by the transport motor.
- The bypass pick-up solenoid is energized by a print start signal and the paper is raised to the paper feed position.
- After the paper is raised to the paper feed position, the bypass paper feed clutch is energized.
- When the bypass paper feed clutch is energized, the drive from the transport motor is transmitted to the manual bypass tray paper feed roller, so that the paper can be fed in.
- The manual bypass tray paper feed roller feeds the paper onto the registration roller.
- When the paper fed from the manual bypass tray is reached onto the registration roller, the bypass paper feed clutch is deenergized to stop the manual bypass tray paper feed roller from rotating.
- The bypass pick-up solenoid is energized and the paper is lowered to the standby position.
- If the registration sensor does not detect paper even after the lapse of a predetermined period of time, the machine determines that there is a paper misfeed at the manual bypass tray. Note, however, that the paper feed sequence is repeated a second time if a paper misfeed is detected. If the registration sensor is still unable to detect paper, the machine determines that there is a paper misfeed at the manual bypass tray. (Paper feed retry control)

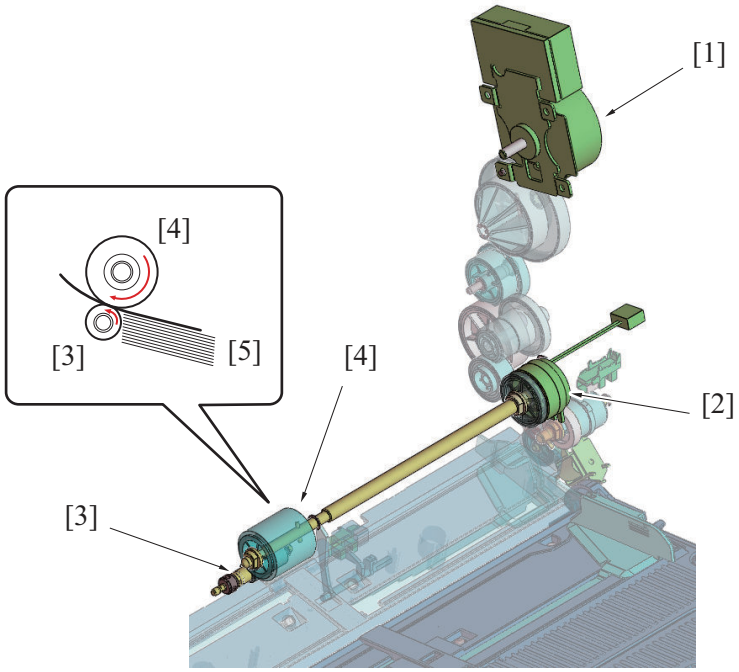


| | | | |
|---|---|---|---|
| [1] | Transport motor (M1) | [2] | Bypass paper feed clutch (CL7) |
| [3] | Manual bypass tray separation roller | [4] | Manual bypass tray feed roller |
| [5] | Paper | - | - |

#### (2) Separation control

- The manual bypass tray separation roller is pressed up against, and driven by, the manual bypass tray feed roller. A torque limited is equipped on the shaft of the manual bypass tray separator roller.
- The acting pressure of the manual bypass tray feed roller/manual bypass tray separation roller/torque limiter serves as the limit torque for preventing double feed.
- When there is no sheet of paper or only one sheet of paper between the manual bypass tray separation roller and manual bypass tray feed roller, the limit torque is exceeded and the manual bypass tray separation roller follows the rotation of the manual bypass tray paper feed roller.
- If there are two or more sheets of paper between the manual bypass tray separation roller and manual bypass tray feed roller, the limit torque is greater than the friction force of the paper, so that the manual bypass tray separation roller stops rotating.
- Because of the stationary manual bypass tray separation roller, the lower sheet of paper in contact with the manual bypass tray separation roller is not fed in, so that the first sheet of paper is properly separated from the second sheet of paper.

### (3) Periodical replacement parts

- The manual bypass tray feed roller and manual bypass tray separation roller are periodical replacement parts. These two rollers must be replaced with new ones at the same time.
- Neither the manual bypass tray feed roller nor manual bypass tray separation roller is provided with a new article detection mechanism. When the two rollers are replaced with new ones, the “Manual Tray” counter must be reset to zero using “Counter/Life” of the Service Mode.
- The number of times the manual bypass tray has been subjected to paper feed operations can be checked with the “Manual Tray” counter of the Service Mode.

| | |
|---|---|
| Periodical replacement cycle | Paper feed operations 200,000 times |

- For details of the applicable replacement procedures for the manual bypass tray feed roller and manual bypass tray separation roller and the Service Mode, see “F.6.7.3 Replacing the manual bypass tray feed roller, manual bypass tray separation roller assy”.

Manual bypass tray feed roller

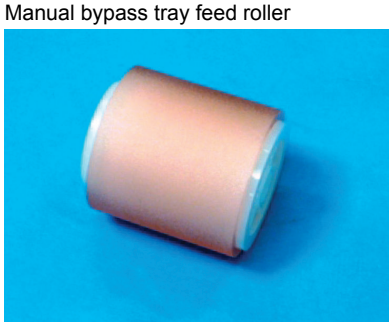

Manual bypass tray separation roller assy

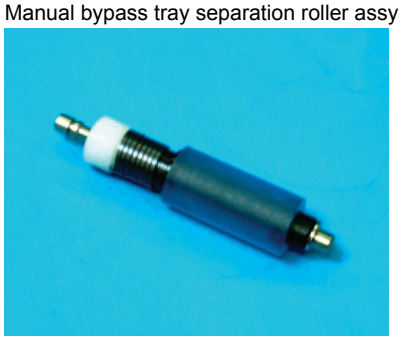

## 10.3.3 Paper size detection control

- The standard size of the paper loaded in the manual section is detected automatically by the combination of ON or OFF positions of the two bypass FD paper size sensors and the bypass CD paper size VR.
- The two bypass FD paper size sensors are mounted in positions at which they can detect length even with the sub tray closed.
- The size detection gear rotates by the moving of the paper guide. The bypass CD paper size VR mounted on the same axis as the size detection gear detects the paper width.
- The machine supports detection of SRA3 size.
- Irregular paper sizes and postcard can be used by entering the custom size.

**NOTE**

- **The paper guide has been extended to inhibit "paper skew" caused when the paper is fed and "paper jam due to paper skew".**

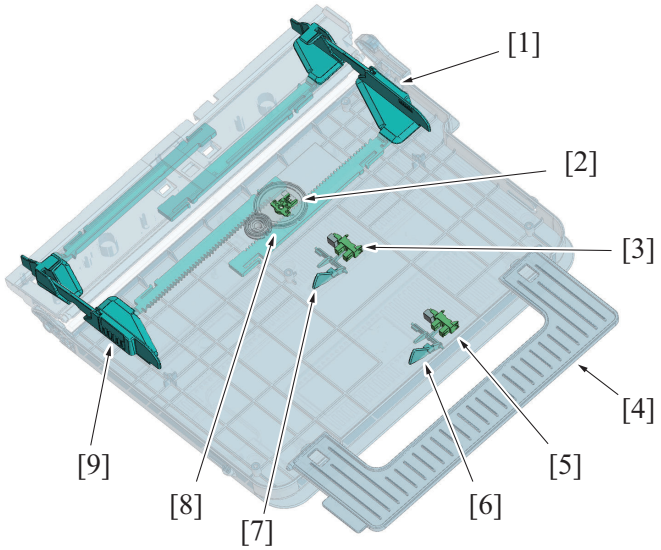


| | | | |
|---|---|---|---|
| [1] | Paper guide (rear side) | [2] | Bypass CD paper size VR (VR1) |
| [3] | Bypass FD paper size sensor/1 (PS28) | [4] | Sub tray |
| [5] | Bypass FD paper size sensor/2 (PS29) | [6] | Actuator/2 |
| [7] | Actuator/1 | [8] | Size detection gear |

| | | | |
|---|---|---|---|
| [9] | Paper guide (front side) | - | - |

### (1) Sheet size determination

| Paper size detected | Bypass FD paper size sensor/1 | Bypass FD paper size sensor/2 | Bypass CD paper size VR |
|---|---|---|---|
| | | | Unit: mm |
| A6S | OFF | OFF | Less than 115 |
| B6S | | | 115 to 144 inclusive |
| A5 * | | | 196 to 225 inclusive * |
| Invoice (5 1/2 × 8 1/2) * | | | |
| B5 * | | | 242 to 268 inclusive * |
| Executive (7 1/4 × 10 1/2) * | | | |
| A5S * | ON | OFF | 133 to 164 inclusive * |
| Invoice S (5 1/2 × 8 1/2 S)* | | | |
| B5S * | | | 169 to less than 196 * |
| Executive S (7 1/4 × 10 1/2 S) * | | | |
| A4S * | | | 196 to 225 inclusive * |
| Letter S (8 1/2 x 11S) * | | | |
| Letter (8 1/2 × 11) | | | 255 to less than 288 |
| A4 | | | 288 to 330 inclusive |
| Legal (8 1/2 × 14) | ON | ON | 201 to 231 inclusive |
| B4 | | | 242 to less than 268 |
| Ledger (11 × 17) | | | 268 to less than 288 |
| A3 | | | 288 to less than 301 |
| A3 wide (12 × 18) | | | 301 to 312.5 inclusive |
| SRA3 | | | Over 312.5 and up to 330 |

- *: When the area is in inches, the size is detected in inches; for other areas, A/B size is detected.

## 10.3.4 Paper empty detection control

- When the paper is loaded in the manual bypass tray, the paper empty detection actuator is pressed by the leading edge of the paper. The paper empty detection actuator is pressed to unblock the bypass paper empty sensor.
- When there is no paper on the manual tray, the paper empty detection actuator is raised. The paper empty detection actuator is returned to its original position to thereby block the bypass paper empty sensor.

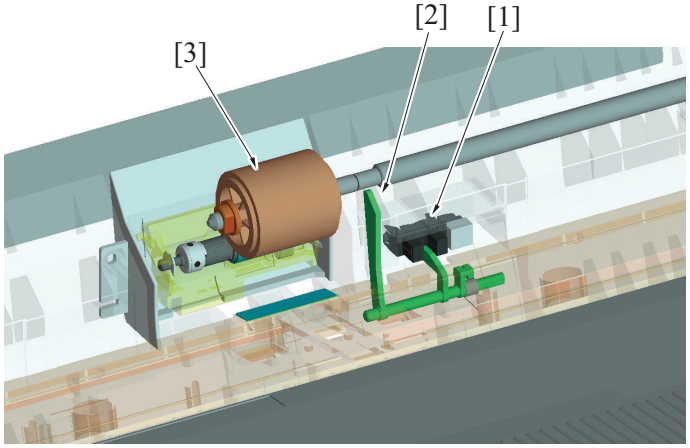


| | | | |
|---|---|---|---|
| [1] | Bypass paper empty sensor (PS27) | [2] | Actuator |
| [3] | Manual bypass tray feed roller | - | - |

## 10.3.5 Paper separation pressure switching mechanism

- Paper misfeed may infrequently occur at use of 300g thick paper. (Paper separation pressure is too low for thick paper)
- Switch the pressure (paper separation pressure) of the manual bypass tray separation roller pressing down on the manual bypass tray feed roller to increase the paper separation pressure and reduce a paper misfeed.
- For details about the adjustment procedure, see I.11.2.3 Separator roller pressure adjustment of the bypass tray.

**NOTE**

- **It does not require to switch the paper separation pressure if paper misfeeds do not occur even at use of 300g thick paper.**
- **Use of plain paper under high-temperature, high-humidity environment after the paper separation pressure is switched may cause a paper misfeed infrequently. (Paper separation pressure is too high for plain paper)**

# 11. PAPER FEED SECTION

## 11.1 Configuration

### 11.1.1 Tray 1

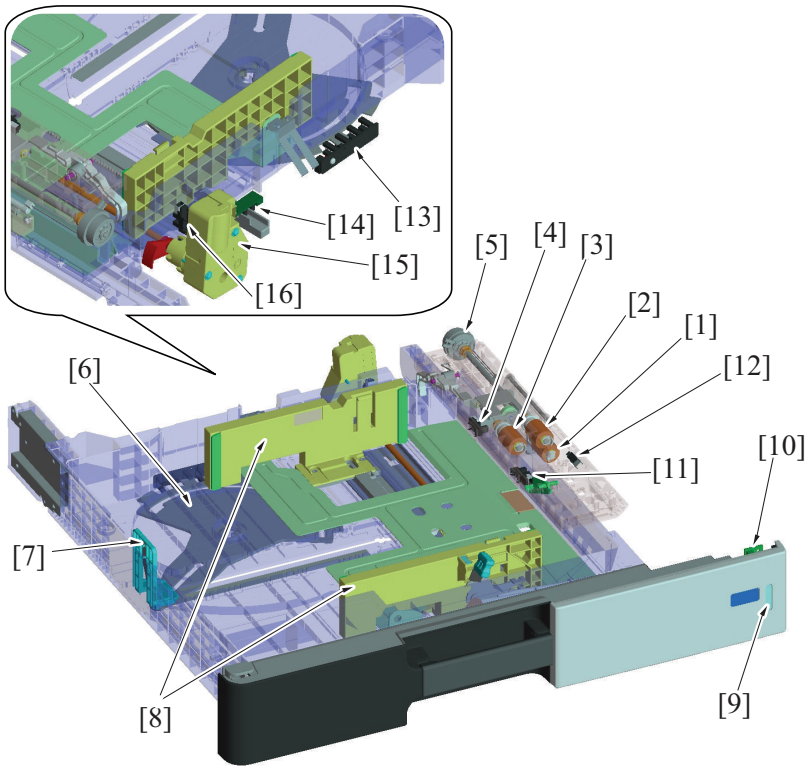


| | | | |
|---|---|---|---|
| [1] | Tray 1 separation roller | [2] | Tray 1 feed roller |
| [3] | Tray 1 pick-up roller | [4] | Tray 1 upper limit sensor (PS25) |
| [5] | Tray 1 paper feed clutch (CL3) | [6] | Paper length detection plate |
| [7] | Paper length guide | [8] | Paper width guide |
| [9] | Machine condition monitor window | [10] | Tray 1 empty indicator board (PEIB/1) |
| [11] | Tray 1 paper empty sensor (PS24) | [12] | Tray 1 paper feed sensor (PS23) |
| [13] | Tray 1 FD paper size board (FDPSB/1) | [14] | Tray 1 CD paper size board (CDPSB/1) |
| [15] | Tray 1 lift-up motor (M12) | [16] | Tray 1 paper near empty sensor (PS11) |

### 11.1.2 Tray 2

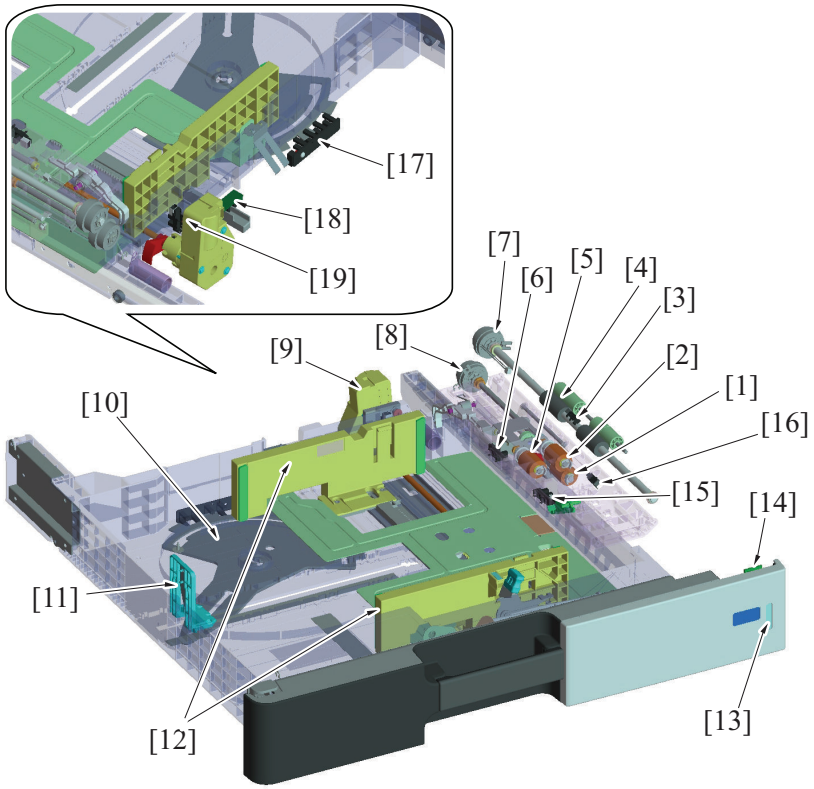


| | | | |
|---|---|---|---|
| [1] | Tray 2 separation roller | [2] | Tray 2 feed roller |
| [3] | Tray 2 vertical transport sensor (PS19) | [4] | Vertical transport roller |
| [5] | Tray 2 pick-up roller | [6] | Tray 2 upper limit sensor (PS22) |
| [7] | Tray 2 vertical transport clutch (CL2) | [8] | Tray 2 paper feed clutch (CL1) |
| [9] | Tray 2 lift-up motor (M13) | [10] | Paper length detection plate |
| [11] | Paper length guide | [12] | Paper width guide |
| [13] | Machine condition monitor window | [14] | Tray 2 empty indicator board (PEIB/2) |
| [15] | Tray 2 paper empty sensor (PS21) | [16] | Tray 2 paper feed sensor (PS20) |
| [17] | Tray 2 FD paper size board (FDPSB/2) | [18] | Tray 2 CD paper size board (CDPSB/2) |
| [19] | Tray 2 paper near empty sensor (PS12) | - | - |

## 11.2 Drive

### 11.2.1 Drive

- Drive parts are arranged in the same way in tray 1 and tray 2. If the description that follows is not identified with tray 1 or tray 2, it is applicable to both tray 1 and tray 2 in terms of mechanism and control.
- Transport motor drives the tray1 and 2 paper feed roller section.
- The drive section of each tray has a clutch that controls rotation of the paper feed roller section.

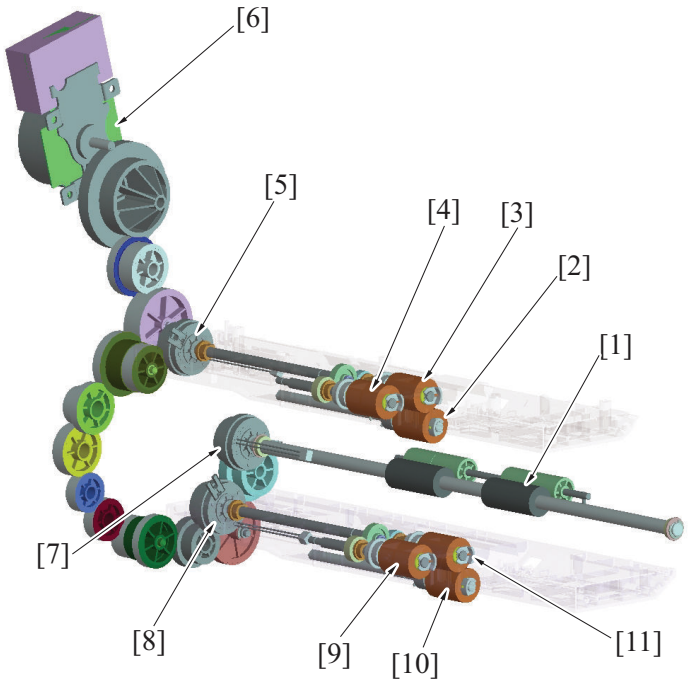


| | | | |
|---|---|---|---|
| [1] | Vertical transport roller | [2] | Tray 1 separation roller |
| [3] | Tray 1 feed roller | [4] | Tray 1 pick-up roller |
| [5] | Tray 1 paper feed clutch (CL3) | [6] | Transport motor (M1) |
| [7] | Tray 2 vertical transport clutch (CL2) | [8] | Tray 2 paper feed clutch (CL1) |
| [9] | Tray 2 pick-up roller | [10] | Tray 2 separation roller |
| [11] | Tray 2 feed roller | - | - |

### 11.2.2 Layout of sensors and rollers

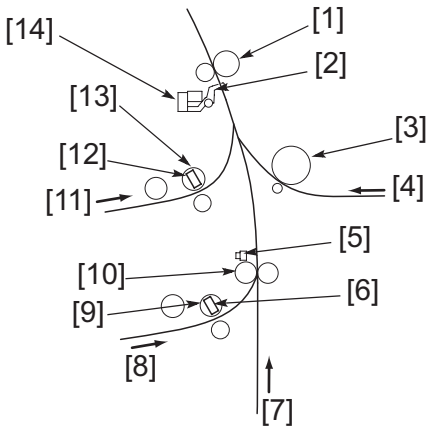


| | | | |
|---|---|---|---|
| [1] | Registration roller | [2] | Actuator of registration roller |
| [3] | Manual bypass tray feed roller | [4] | Paper feeding from manual bypass tray |
| [5] | Tray 2 vertical transport sensor (PS19) | [6] | Tray 2 paper feed sensor (PS20) |
| [7] | Paper feeding from optional paper feed unit | [8] | Paper feeding from tray 2 |
| [9] | Tray 2 feed roller | [10] | Tray 2 vertical transport roller |
| [11] | Paper feeding from tray 1 | [12] | Tray 1 paper feed sensor (PS23) |
| [13] | Tray 1 paper feed roller | [14] | Registration sensor (PS1) |

## 11.3 Operation

### 11.3.1 Up/down control

- Tray 1 and tray 2 are controlled in the same control procedure.

#### (1) Up operation

- The paper lift-up plate B is located under the paper lift-up plate A.
- The lift-up plate drive shaft of the tray 1/2 lift-up motor is connected to paper lift-up plate B.
- When the drive shaft of the tray 1/2 lift-up motor rotates, paper lift-up plate B raises paper lift-up plate A.

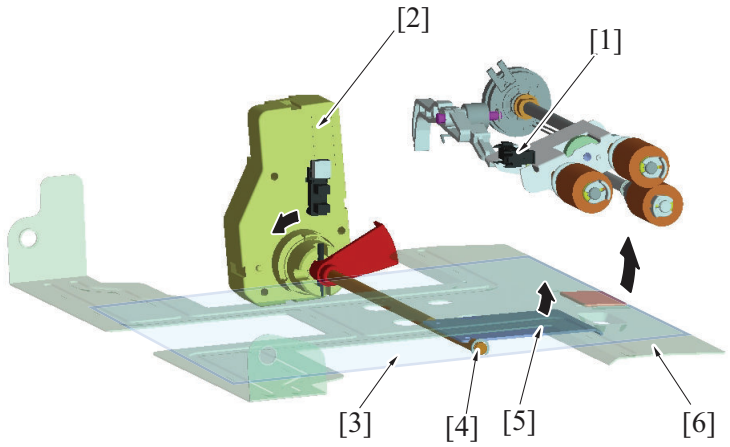


| | | | |
|---|---|---|---|
| [1] | Tray 1 upper limit sensor (PS25) / Tray 2 upper limit sensor (PS22) | [2] | Tray 1 lift-up motor (M12) / Tray 2 lift-up motor (M13) |
| [3] | Paper | [4] | Lift-up plate drive shaft |
| [5] | Paper lift-up plate B | [6] | Paper lift-up plate A |

### (2) Down operation

- When the tray is slid out of the machine, the coupling of tray 1/2 lift-up motor and the lift-up plate drive shaft are disconnected from each other.
- When the driving force of tray 1/2 lift-up motor is released from the lift-up plate drive shaft, the paper lift-up plate starts lowering by its own weight.

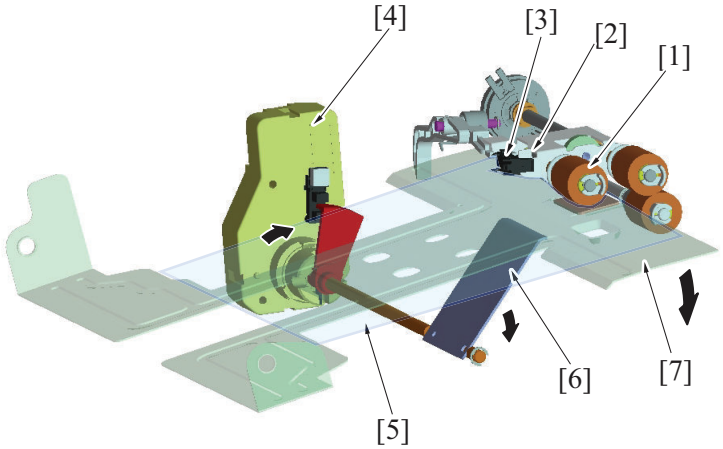


| | | | |
|---|---|---|---|
| [1] | Pick-up roller | [2] | Light blocking plate of upper limit sensor |
| [3] | Tray 1 upper limit sensor (PS25) / Tray 2 upper limit sensor (PS22) | [4] | Tray 1 lift-up motor (M12) / Tray 2 lift-up motor (M13) |
| [5] | Paper | [6] | Paper lift-up plate B |
| [7] | Paper lift-up plate A | - | - |

### (3) Operation timing

#### (a) When the tray is slid in

- When the tray is slid into the machine, the sensor on the tray 1/2 FD paper size board is blocked. The machine then determines that the tray is slid into position.
- The paper lift-up plate is lowering when the tray is slid out, so that the tray 1/2 upper limit sensor is unblocked.
- Determining after tray insertion that the tray 1/2 upper limit sensor is unblocked, the machine lets the tray 1/2 lift-up motor rotate to start the up operation of the paper lift-up plate.
- When the paper stack is raised to a predetermined height after the up operation of the paper lift-up plate has been started, the tray 1/2 upper limit sensor is blocked.
- Determining that the tray 1/2 upper limit sensor is blocked, the machine stops the tray 1/2 lift-up motor to complete the up operation of the paper lift-up plate.
- Control is provided to make sure that only one tray performs the up operation at one time.
- If the tray is slid out during the up operation of the paper lift-up plate and accordingly the sensor on the tray 1/2 FD paper size board is unblocked, the up operation of the paper lift-up plate is terminated.

#### (b) During a print cycle

- When the amount of paper decreases as the unit keeps printing, the pick-up roller will gradually come down to unblock the tray 1/2 upper limit sensor. The tray 1/2 lift-up motor will rotate again to lift up the paper lift-up plate.
- When the tray 1/2 upper limit sensor is blocked, the tray 1/2 lift-up motor will stop to stop lift-up the paper lift-up plate.

- The sequence of these operations is repeated to keep constant the pressure between the pick-up roller and paper stack (paper take-up pressure) regardless of the amount of paper still available for use.

### 11.3.2 Paper feed control

- Tray 1 and tray 2 are controlled in the same control procedure.

#### (1) Pick-up control

- The tray 1/2 paper feed clutch is energized after the lapse of a predetermined period of time after the print start signal.
- The driving force of the transport motor is transmitted to the pick-up roller and paper feed roller when the tray 1/2 paper feed clutch is energized. These rollers rotate to pick up and feed a sheet of paper into the machine.

#### (2) Separation control

- The separation roller is pressed up against the feed roller by the pressure of a spring and an acting pressure generated from torque of the torque limiter.
- The acting pressure of the feed roller/separation roller/torque limiter serves as the limit torque for preventing double feed.
- When there is no sheet of paper or only one sheet of paper between the separation roller and feed roller, the limit torque is exceeded and the separation roller follows the rotation of the feed roller.
- If there are two or more sheets of paper between the separation roller and feed roller, the limit torque is greater than the friction force of the paper, so that the separation roller is not rotated.
- The separation roller causes the lower sheet of paper in contact with the separator roller to be pushed backward in the direction of the tray, so that the lower sheet of paper is properly separated.
- Only the upper paper contacting the feed roller is conveyed to the registration section.

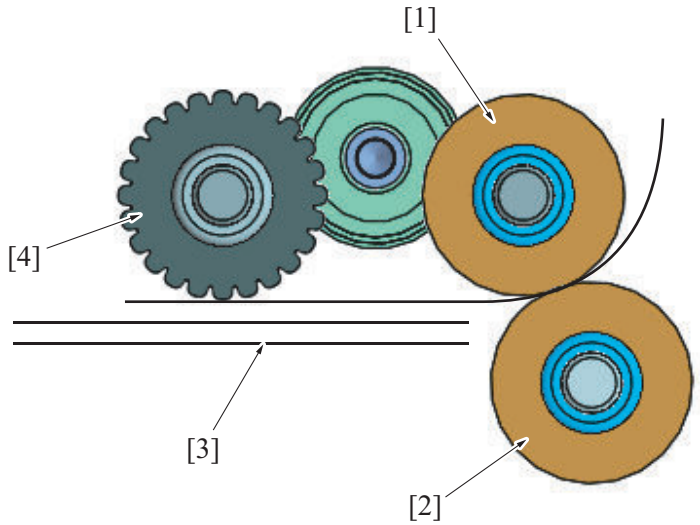


| | | | |
|---|---|---|---|
| [1] | Feed roller | [2] | Separation roller |
| [3] | Paper | [4] | Pick-up roller |

#### (3) Paper feed retry control

- If the specified sensor is unable to detect the paper even after the lapse of a predetermined period of time after the start of the paper feed sequence, the machine determines that there is a paper misfeed. To reduce possibility of paper misfeed, if a paper misfeed is detected during a print job under the following conditions, the paper feed sequence is performed again (retry) only once. The feed roller is temporarily stopped, and is then turned again. A paper misfeed results if the specified sensor is still unable to detect the paper even after the paper feed retry sequence, the machine determines that there is a paper misfeed.

| Paper port | Paper feed retry control | Sensor name |
|---|---|---|
| Manual bypass tray | Only in black mode | Registration sensor |
| Tray 1 | No retry control is performed. | |
| Tray 2 | Only in black mode | Tray 2 vertical transport sensor |
| Tray 3 (Option: PC-110/210) | Retry control is performed both in color and black mode. | Tray 3 vertical transport sensor |
| Tray 4 (Option: PC-210) | | Tray 4 vertical transport sensor |
| LCC (Option: PC-410) | | Vertical transport sensor |
| LCT (Option: LU-302) | | LU paper feed sensor |

#### (4) Feed roller stop control

- During multi-print cycles, the target printed pages number is maintained due to correction of the transport speed variations and a proper paper-to-paper distance.
- The feed roller stop control is performed only during paper feed from tray 1 or tray 2.
- Time it takes the paper feed sensor to be activated after the start of a paper feed sequence is measured. If the distance between two sheets of paper is determined to be narrow, the feed roller is stopped once, so that a proper paper-to-paper distance can be achieved.

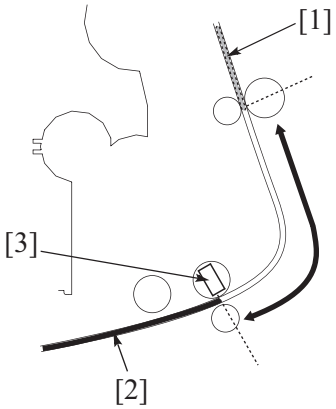


| | | | |
|---|---|---|---|
| [1] | Preceding sheet | [2] | Sheet of paper being controlled |
| [3] | Paper feed sensor | - | - |

### (5) Vertical transport roller speed reduction control

- In the same manner as with the feed roller speed reduction control, control is performed to reduce the speed of the vertical transport roller during a multi-print cycle, thereby maintaining a proper paper-to-paper distance.
- The vertical transport roller speed reduction control is performed during paper feed from tray 3, tray 4, or LCT.
- Time it takes the vertical transport sensor to be activated after the start of a paper feed sequence is measured. If the distance between two sheets of paper is determined to be narrow, the vertical transport roller is decelerated for a predetermined period of time, so that a proper paper-to-paper distance can be achieved.

### (6) Paper feed control

#### (a) Tray 1

- The tray 1 feed roller feeds the paper onto the registration roller.
- The tray 1 paper feed sensor located downstream of the tray 1 feed roller detects the paper fed from the feed roller.
- When the paper fed from the feed roller moves past the registration roller and reaches a predetermined position, the tray 1 paper feed clutch is deenergized to disconnect the driving force of the transport motor. The pick-up roller and feed roller follow the movement of the paper, continuing rotating. The pick-up roller and feed roller stop rotating as soon as the paper moves past them.
- If the registration sensor is unable to detect paper even after the lapse of a predetermined period of time, the machine determines that there is a paper misfeed at tray 1.

#### (b) Tray 2

- The tray 2 feed roller feeds the paper onto the tray 2 vertical transport roller.
- The tray 2 paper feed sensor located downstream of the tray 2 feed roller detects the paper fed from the tray 2 feed roller.
- When the tray 2 vertical transport sensor located downstream of the tray 2 vertical transport roller along the paper path detects the leading edge of the paper fed from the feed roller, the tray 2 paper feed clutch is deenergized to disconnect the driving force of the transport motor. The pick-up roller and feed roller follow the movement of the paper, continuing rotating. The pick-up roller and feed roller stop rotating as soon as the paper moves past them.
- If the tray 2 vertical transport sensor is unable to detect the leading edge of paper even after the lapse of a predetermined period of time, the machine determines that there is a paper misfeed at tray 2.

### (7) Paper misfeed display

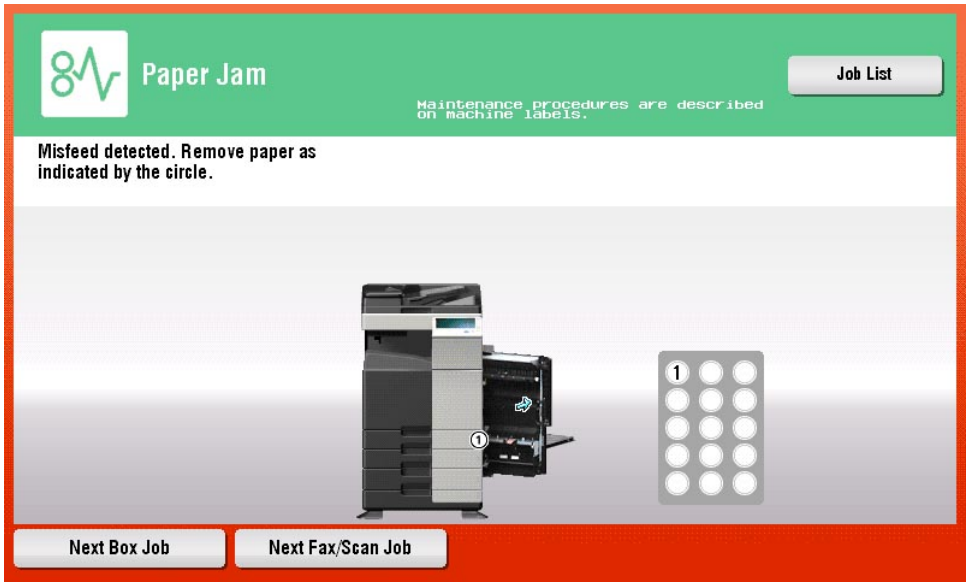

**NOTE**

- **The setting for the paper misfeed display can be made using "System 2/JAM Code Display Setting" of the Service Mode, by either enabling or disabling the JAM code display.**

### (8) Downstream exit control during multi-print cycle

- The following terms are used for convenience' sake throughout this chapter.
  Upstream: Refers to the source side of paper supply relative to the paper feeding direction
  Downstream: Refers to the destination side of paper transport relative to the paper feeding direction
- If a paper misfeed occurs at the paper feed section which is upstream in paper transport, the print cycle is not brought to an immediate stop; rather, the machine allows a sheet of paper, for which the print cycle is to be completed at a downstream side, to continue undergoing the current print cycle and feeds the printed page out after completion of the current print cycle.

#### (a) Types of paper misfeed governed by downstream exit control

| | |
|---|---|
| Misfeed at tray 1 paper feed section | Misfeed at LCC (PC-410) paper feed section |
| Misfeed at tray 2 paper feed section | Misfeed at LCT (LU-302) paper feed section |
| Misfeed at tray 3 paper feed section | Misfeed at manual bypass tray paper feed section |
| Misfeed at tray 4 paper feed section | Misfeed at vertical transport section |

#### (b) 1-sided printing

- In consecutive 1-sided printing, the paper causes a jamming at the paper feed tray section.
- 1st sheet after an image transfer is remained at the paper exit section.
- 2nd sheet before an image transfer is remained at the transfer section and the vertical transport section.

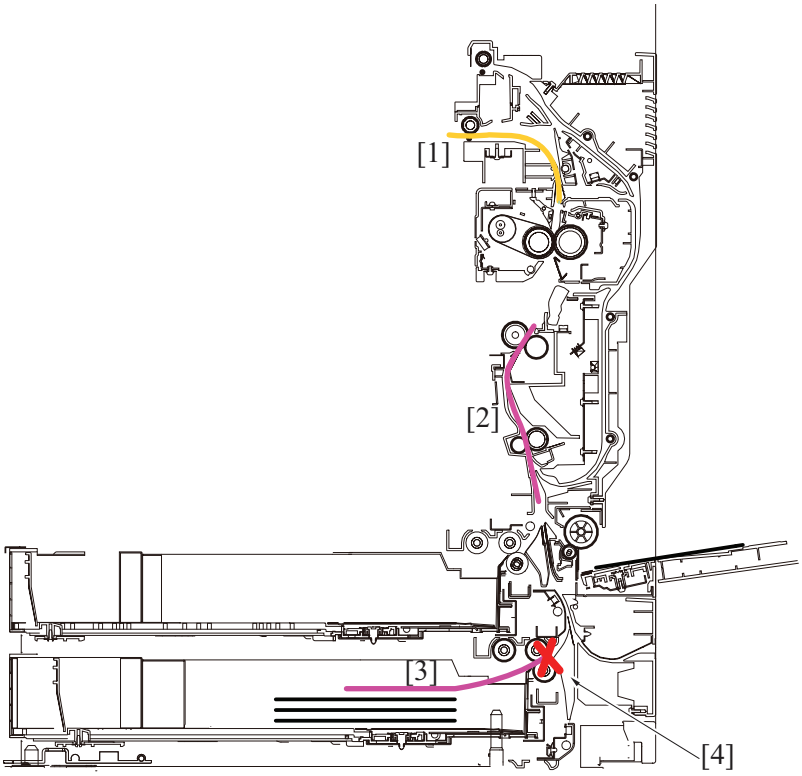


| | | | |
|---|---|---|---|
| [1] | Sheet after a 1-sided image transfer | [2] | Sheet before a 1-sided image transfer |
| [3] | Jamming paper | [4] | Jamming |

Operation

1. Stop feed/transport operation for jamming paper [3].
2. Exit paper [1].
3. Transfer and fuse image onto, and exit, sheet [2].

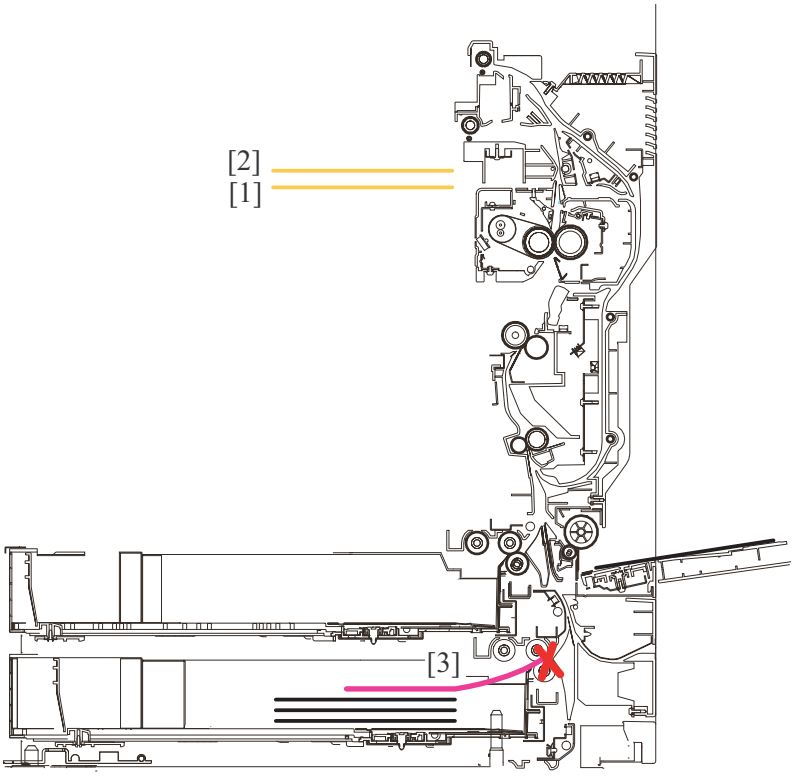


### (c) 2-sided printing

- In consecutive 2-sided printing, the paper causes a jamming at the paper feed tray section.
- One sheet after a 2-sided image transfer is remained at the paper exit section.
- Two sheets before a 1-sided image fusing is remained at the duplex section.
- One sheet before an image transfer is remained at the vertical transport section and the registration section.

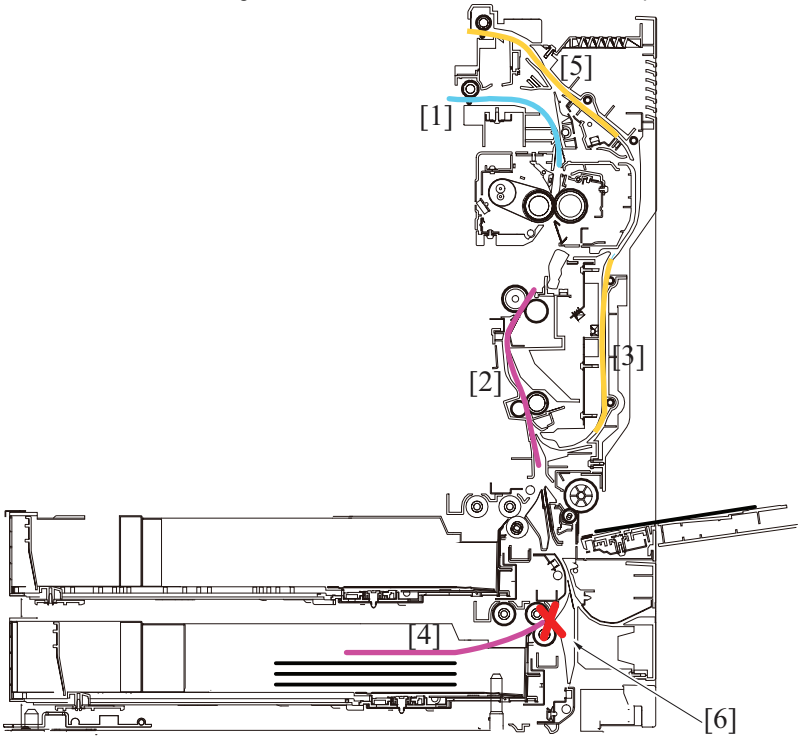


| | | | |
|---|---|---|---|
| [1] | Sheet after a 2-sided image transfer | [2] | Sheet before a 1-sided image transfer |
| [3] | Sheet after a 1-sided image transfer | [4] | Jamming paper |
| [5] | Sheet after a 1-sided image transfer | [6] | Jamming |

Operation

1. Stop feed/transport operation for jamming paper [4].
2. Exit paper [1].
3. Transfer and fuse 2-side image onto, and exit, sheets [3] and [5] located at the reverse/duplex section.
4. Print 2-side image onto, and exit, sheet [2] located before image transfer.

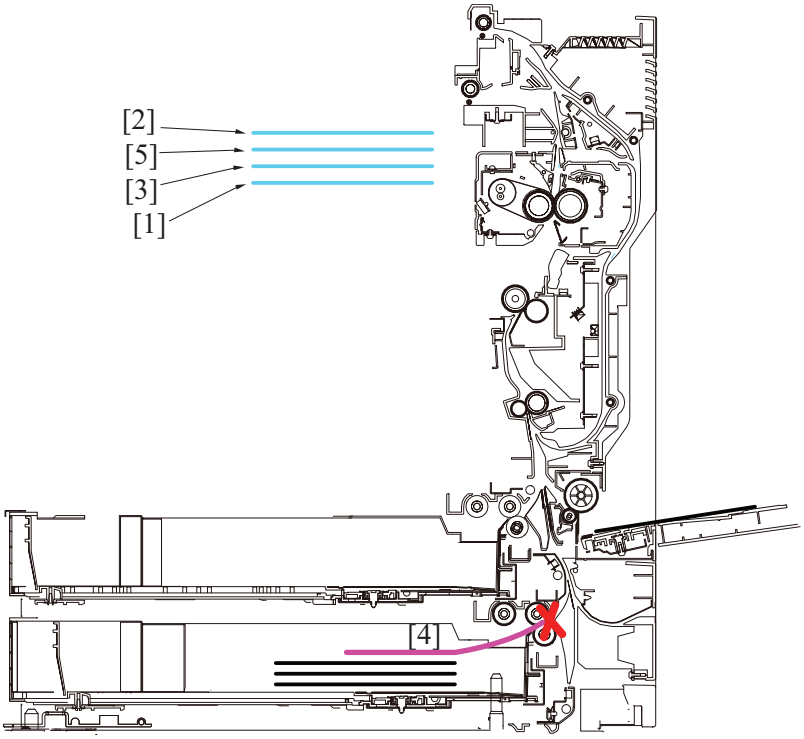


### (9) Periodical replacement parts

- The pick-up roller, feed roller, and separation roller are periodical replacement parts. These three rollers must be replaced with new ones at the same time.
- None of the pick-up roller, feed roller, and separation roller is provided with a new article detection mechanism. When the three rollers are replaced with new ones, the “1st.” or “2nd.” counter must be reset to zero using “Counter/ Life” of the Service Mode.
- The number of times tray 1/tray 2 has been subjected to paper feed operations can be checked with the “1st./2nd.” counter of the Service Mode.

| | |
|---|---|
| Periodical replacement cycle | Paper feed operations 300,000 times |

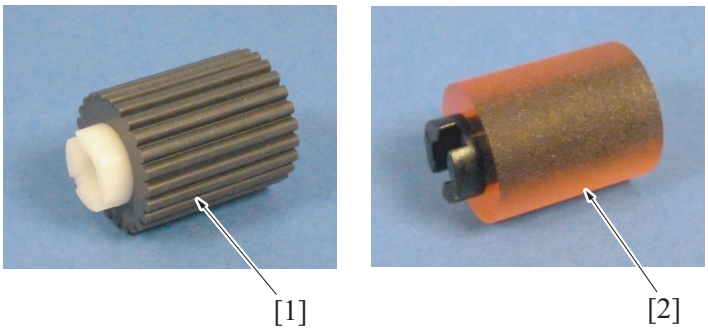


| | |
|---|---|
| [1] Pick-up roller | [2] Feed roller/Separation roller |

- To improve exchangeability, the pick-up roller, feed roller, and separation roller are held in position on one side. At the time of replacement, remove the paper feed tray and remove the C-clip on one side. It allows each of the three rollers to be removed.
- For details of the applicable replacement procedures for the pick-up roller, feed roller, and separation roller and the Service Mode, see “F.6.7.1 Replacing the tray 1 feed roller, tray 1 pick-up roller, tray 1 separation roller” and “F.6.7.2 Replacing the tray 2 feed roller, tray 2 pick-up roller, tray 2 separation roller.”

## 11.3.3 Paper pick-up pressure switching mechanism

- A paper misfeed may infrequently occur, if lightweight 52 g recycled paper, or the like, is used under high temperature, high humidity environment. (Paper pick-up pressure is too high for the thin paper)
- Replacement of the pick spring that is mounted to paper feed unit 2 may lower the paper pick-up pressure and reduce the paper misfeed.
- For the replacement procedure, see "I.11.2.2 Pick-up pressure adjustment of the tray 1/2".

**NOTE**

- **Since the spring is available to the recommended thin paper (CS520), replacement is not required.**
- **At using plain paper under high-temperature, high-humidity environment or feeding thick paper after replacement of the pick-up spring, a paper misfeed may infrequently occur. (Paper pick-up pressure is too low for the thick paper)**

## 11.3.4 Paper size detection control

### (1) Paper width detection (CD)

- The size in paper width is detected with the combination of ON/OFF the transmission type photosensors 1, 2 on the CD paper size board.
- The CD paper size sensor is unblocked or blocked according to the position of the paper width detection plate connected to the paper width guide plate.

### (2) Paper length detection (FD)

- The size in paper length is detected with the combination of ON/OFF transmission type photosensors 1 to 4 on the FD paper size board.
- The FD paper sensor is unblocked or blocked by the paper length detection plate position connected to the paper length guide plate.
- The sensor on the FD paper size board also functions to detect whether the tray is mounted.

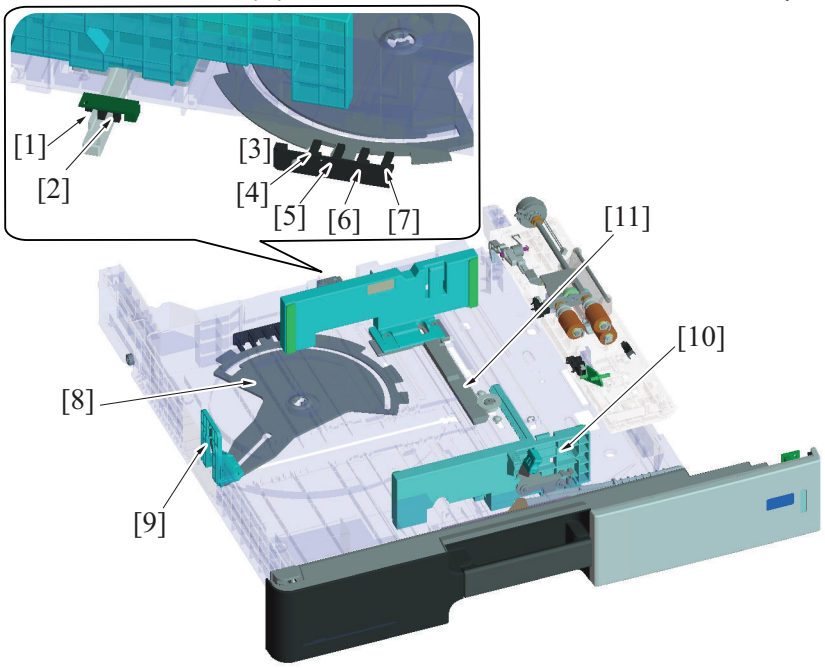


| | | | |
|---|---|---|---|
| [1] | CD paper sensor/2 | [2] | CD paper sensor/1 |
| [3] | FD paper size board | [4] | FD paper sensor/1 |
| [5] | FD paper sensor/2 | [6] | FD paper sensor/3 |
| [7] | FD paper sensor/4 | [8] | Paper length detection plate |
| [9] | Paper length guide | [10] | Paper width guide |
| [11] | Paper width detection plate | - | - |

### (3) Sheet size determination

- The 2 CD paper size sensors detect the paper width, and the 4 FD paper size sensors detect the paper length. Paper size is determined with the combination of the above paper width and paper length.

| Paper size | FD paper size board | | | | CD paper size board | |
|---|---|---|---|---|---|---|
| | Sensor 4 | Sensor 3 | Sensor 2 | Sensor 1 | Sensor/2 | Sensor/1 |
| SRA3 (*1) | H | L | L | H | H | H |
| A3 Wide (*1) | H | L | L | H | L | H |
| A3 | L | L | H | L | L | H |
| B4 | L | H | H | H | L | H |
| A4S | H | H | L | L | L | L |
| A4 | H | L | L | H | L | H |
| B5S | L | H | H | L | L | L |
| B5 | L | H | L | L | L | H |
| A5S (*2) | H | L | H | L | L | L |
| Invoice S (*2) | H | L | H | L | L | L |
| Ledger (11×17) | L | L | H | L | H | H |
| Legal (8 1/2x14) | L | H | H | H | L | L |
| Letter S (8 1/2x11 S) | L | L | L | H | L | L |
| Letter (8 1/2x11) | H | L | H | L | H | H |
| FLS S (*3) | H | H | H | H | L | L |
| 8K S (270 mm x 390 mm) | L | H | L | H | H | H |
| 16K (270 mm × 195 mm) | L | H | H | L | H | H |

- *1: SRA3 and A3 Wide are support only from the tray 2 and the bypass tray.
- *2: For regions using inches, Invoice S size is detected. For other regions, A5S size is detected.
- FLS can be configured with one of the following paper sizes from Foolscap Size Setting in Service Mode.
  - 8 1/2×13 1/2, 8×13, 8 1/4×13, 8 1/2×13

### (a) Sensor states

| Sensor | Physical state | |
|---|---|---|
| | HIGH signal | LOW signal |
| FD paper size board : Sensors 1 to 4 | Blocked | Unblocked |
| CD paper size board: Sensor 1 or 2 | | |

## 11.3.5 Remaining paper detection control

- The remaining paper detection control is performed under any of the following conditions:
  - "Tray 1/tray 2 is closed in position"
  - "The up/down control of the paper lift-up plate is completed"

### (1) Paper near-empty detection

- The tray 1/2 near empty sensor detects a paper near-empty condition of the tray.
- As paper is consumed, the paper lift-up plate is raised. This raises the near empty detection actuator provided at the lift-up plate drive shaft of the lift-up motor.

When a sufficient amount of paper is loaded

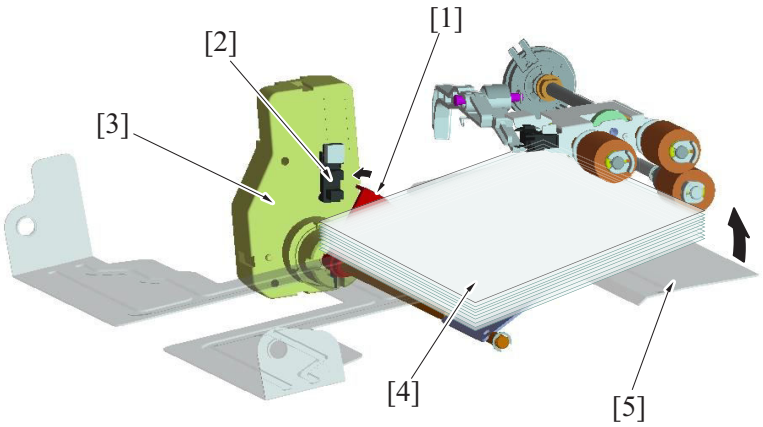


- When the near empty detection actuator is raised to a position at which the tray 1/2 near empty sensor is blocked, the machine detects a near-empty condition.

**NOTE**

- **A near-empty condition is detected when the amount of paper still available for use becomes about 50 sheets.**

Near empty condition

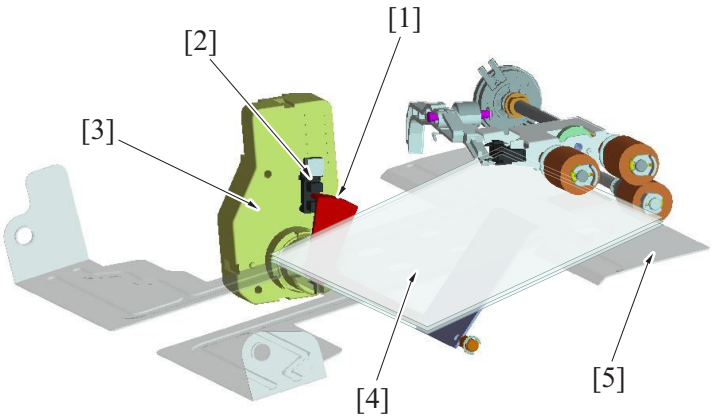


| | | | |
|---|---|---|---|
| [1] | Actuator | [2] | Tray 1/2 paper near empty sensor (PS11/PS12) |
| [3] | Tray 1/2 lift-up motor (M12/M13) | [4] | Paper |
| [5] | Paper lift-up plate | - | - |

### (2) Paper empty detection

- Tray 1 and tray 2 use the same control system to detect a paper empty condition.
- A paper empty condition is detected by the tray 1/2 paper empty sensor.

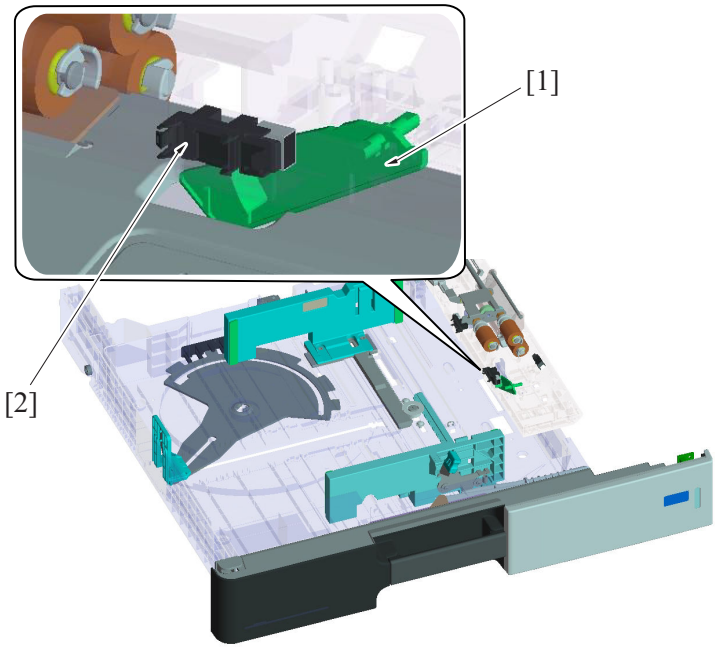


| | | | |
|---|---|---|---|
| [1] | Actuator | [2] | Tray 1/2 paper empty sensor (PS24/PS21) |

### (3) Remaining paper level display

- The amount of remaining paper is indicated by the LED on the right side of each tray and by the screen of the control panel.
- The following shows how the level is displayed.

| Tray condition | Empty | Near empty | Other statuses (Including during lift-up and no tray conditions) |
|---|---|---|---|
| LED | ON | Blinking/OFF * | OFF |

*: LED turns OFF when Paper Remainder is set to Type 2: Service Mode -> System 1 -> Machine State LED Setting -> Paper Remainder.




| | | | |
|---|---|---|---|
| [1] | Tray 1 empty indicator | [2] | Tray 2 empty indicator |

## 11.3.6 Paper feed tray locking mechanism

- The paper feed tray is provided with a locking mechanism.

### (1) Unlocking the paper feed tray

- With drawing the lever of the paper feed tray to the front will disengage the tray lock lever equipped on the right side of the paper feed tray.
- The paper feed tray can be pulled out of the machine by continuing pulling the lever with the tray lock lever disengaged.
- Rollers are provided for the right and left tray rails. They reduce the operating force required for sliding in/out the paper feed tray.

### (2) Locking the paper feed tray

- Pushing the lever of the paper feed tray all the way toward the rear will allow the paper feed tray to be slid into the machine.
- When the paper feed tray is inserted all the way in place, the tray lock lever equipped on the right side of the paper feed tray locks the tray in place.
- To prevent false detection, the paper feed tray is equipped with a spring in the rear that pushes the tray back out if the tray is not inserted all the way in place.

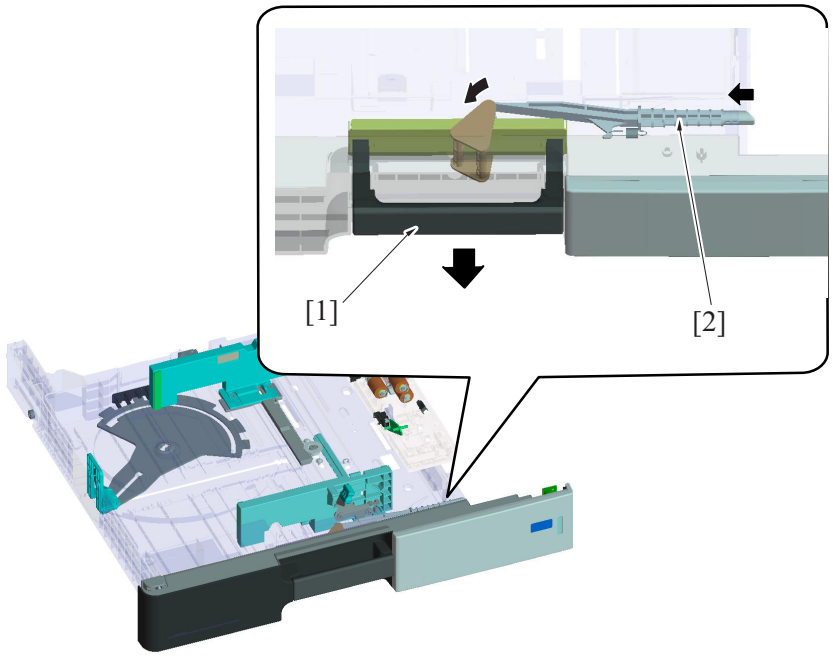


| | | | |
|---|---|---|---|
| [1] | Lever of the paper feed tray | [2] | Lock lever |

### 11.3.7 Roller retract mechanism

- When the paper feed tray is inserted or pulled out, there is a mechanism which retracts the pick-up roller and the separation roller.
- The pick-up roller retracts from the paper.
- The separation roller retracts from the feed roller.

Front view

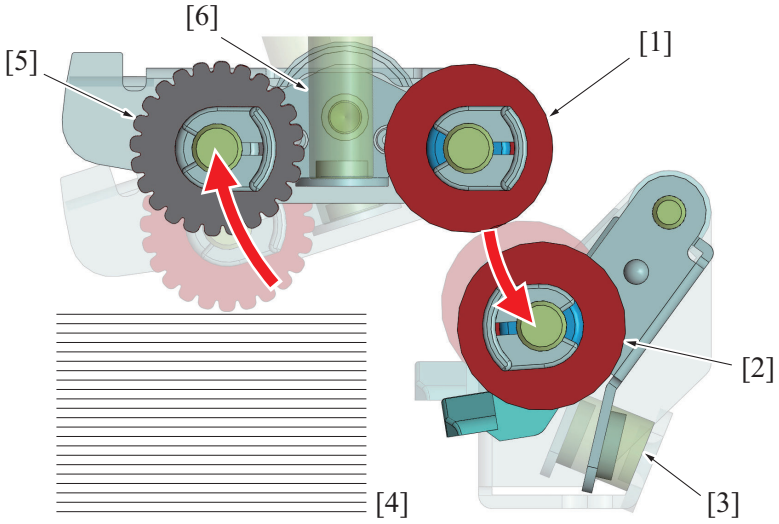


| | | | |
|---|---|---|---|
| [1] | Feed roller | [2] | Separation roller |
| [3] | Separation roller pressure spring | [4] | Paper |
| [5] | Pick-up roller | [6] | Pick-up roller pressure spring |

#### (1) Pick-up roller retract mechanism

- When the paper feed tray is inserted or pulled out, the pick-up roller prevents the paper from being damaged.
- The pick-up roller comes down through spring pressure when the paper feed tray is closed. When paper is placed, the roller is pressed against the paper surface. (Paper feed position)
- Released the paper feed tray lock, the roller lifting lever is also released and the pick-up roller holder is pushed up to the retracted position. It prevents the paper surface from being damaged even if the paper tray is pulled out.

Left side view

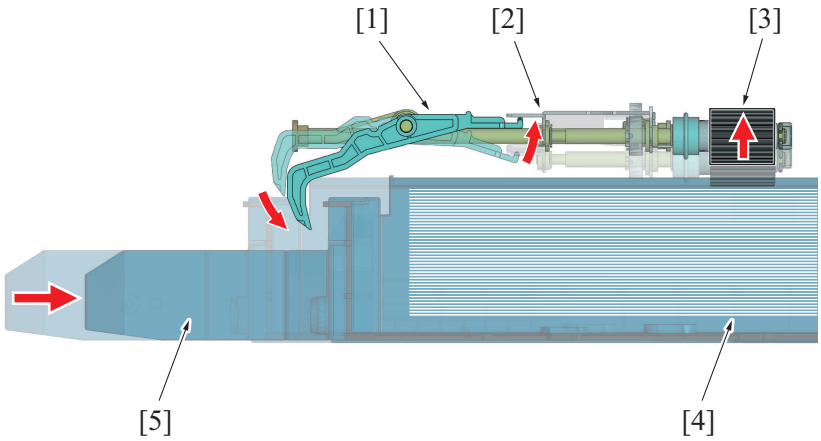


| | | | |
|---|---|---|---|
| [1] | Roller lifting lever | [2] | Pick-up roller holder |
| [3] | Pick-up roller (retracted position) | [4] | Paper |
| [5] | Paper feed tray (lock released) | - | - |

### (2) Separation roller retract mechanism

- When a paper jam occurs and paper is caught between rollers where the feed roller is pressing the separation roller, paper will be left inside the machine through pulling out the paper feed tray. If you insert the paper feed tray in that state, the paper may get torn in pieces which may fall off and scatter inside the machine. It prevents paper from being torn or falling off through retracting the separation roller.
- The separation roller is pressed against the feed roller by spring pressure when the paper feed tray is closed. (Paper feed position)
- Release the paper tray lock, the roller pushdown lever is also released and the separation roller retract lever is pushed down to the retracted position. It releases the paper from the rollers even if it is jammed between the rollers.

Left side view

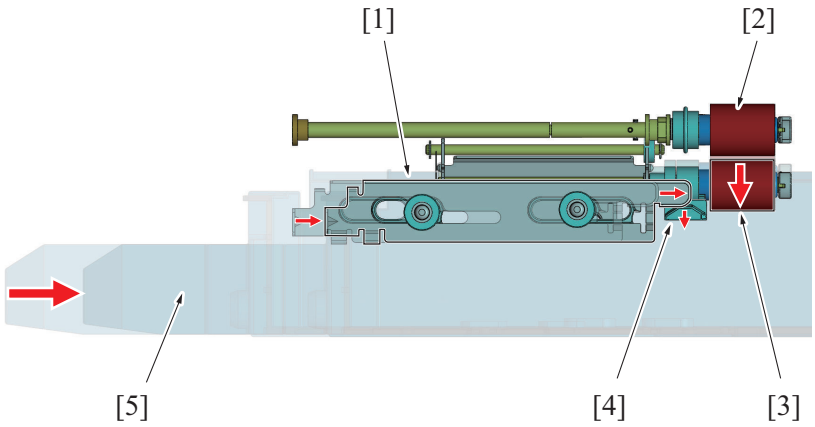


| | | | |
|---|---|---|---|
| [1] | Roller pushdown lever | [2] | Feed roller |
| [3] | Separation roller (retracted position) | [4] | Separation roller retract lever |
| [5] | Paper feed tray (lock released) | - | - |

## 11.3.8 Paper tray stopper release mechanism

- The paper feed tray is equipped with a stopper mechanism.
- When paper is placed, the stopper prevents the paper feed tray from falling off from the machine even if it is pulled out.
- The paper feed tray can be removed if paper is remained inside the machine at the time of handling a paper jam or a misfeed.

**NOTE**

- **The paper feed stopper release mechanism is mounted only on trays 1 and 2.**
- **To remove trays 3 and 4 of the optional PC-110/210, remove the paper feed stopper (1 screw).**

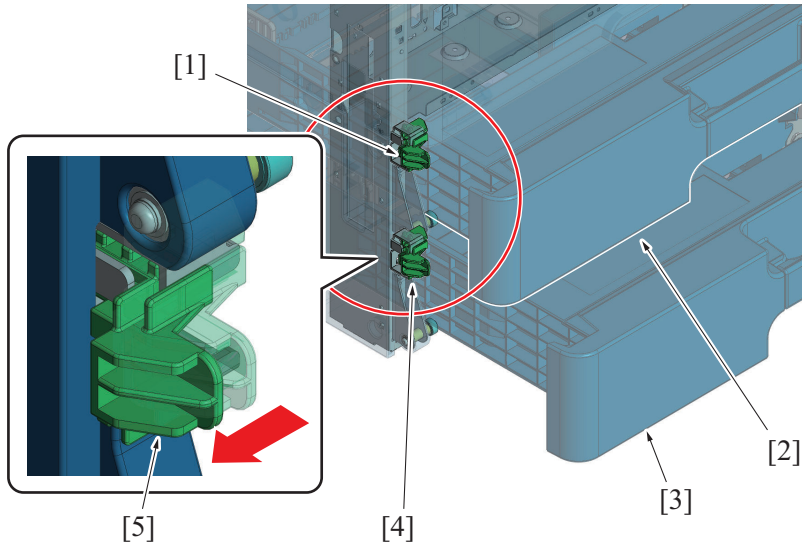


| | | | |
|---|---|---|---|
| [1] | Tray 1 stopper | [2] | Tray 1 |
| [3] | Tray 2 | [4] | Tray 2 stopper |
| [5] | Tray stopper release | - | - |

#### (1) Releasing the paper tray stopper

- Press the stopper on its left side, the stopper lock will be released.

#### (2) Locking the paper tray stopper

- Press the stopper on its right side, the stopper lock will be locked.

**NOTE**

- **A mechanism is provided to push and lock the stopper through closing the paper tray to its home position even if you forget to lock it. (Mechanism to prevent forgetting lock)**

### 11.3.9 Dehumidifier mechanism (PC-110/PC-210/PC-410/DK-510/ HT-509/MK-719)

The optional heater HT-509 can be attached to the bottom (top of the paper feed cabinet) of the paper tray 2 on the machine.

#### (1) Configuration

To make use of the function of the heater HT-509, the following combined optional equipment is required.

- Paper feed cabinet PC-110/PC-210/PC-410 or the desk DK-510.
- Heater HT-509
- Power Supply BOX MK-734

Rear view

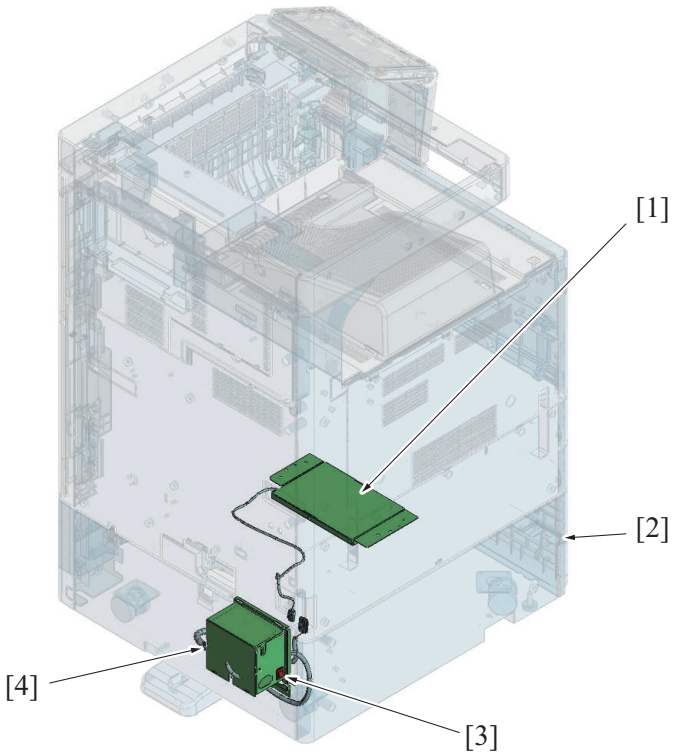

| | | | |
|---|---|---|---|
| [1] | Dehumidifier heater (DH111): HT-509 | [2] | Paper feed cabinet (Example: PC-210) |
| [3] | Dehumidifier heater switch | [4] | Power Supply BOX MK-734 |

### (2) Function

- The heater generates heat when it is energized, which prevents the paper in the machine paper feed section and paper feed cabinet from absorbing the damp. It prevents paper curling, paper misfeeds, paper jams, and abnormal images that occur when paper absorbs the damp.

### (3) Control

- Turn on the dehumidifier heater switch of the Power Supply BOX MK-734 to perform humidity control.
- Turn off the dehumidifier heater switch to stop the dehumidifier heater function.

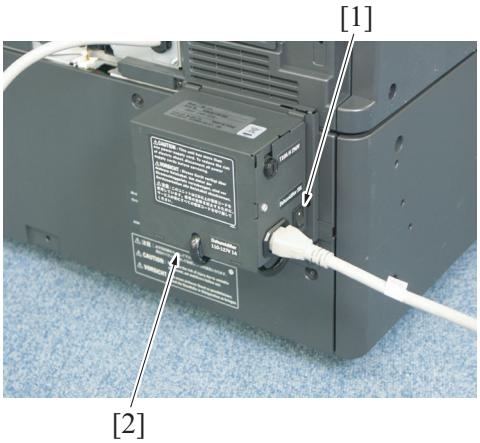


| | | | |
|---|---|---|---|
| [1] | Dehumidifier heater switch | [2] | Power Supply BOX MK-734 |

#### (a) Operation timing

- If the machine is stopped*, the heater is energized and generates heat.
- When the machine starts normally, it stops energizing the heater.

**NOTE**

- ***: When the covers are opened, a problem or paper jam occurs, or in power-saving mode.**

# 12. VERTICAL TRANSPORT SECTION

## 12.1 Configuration

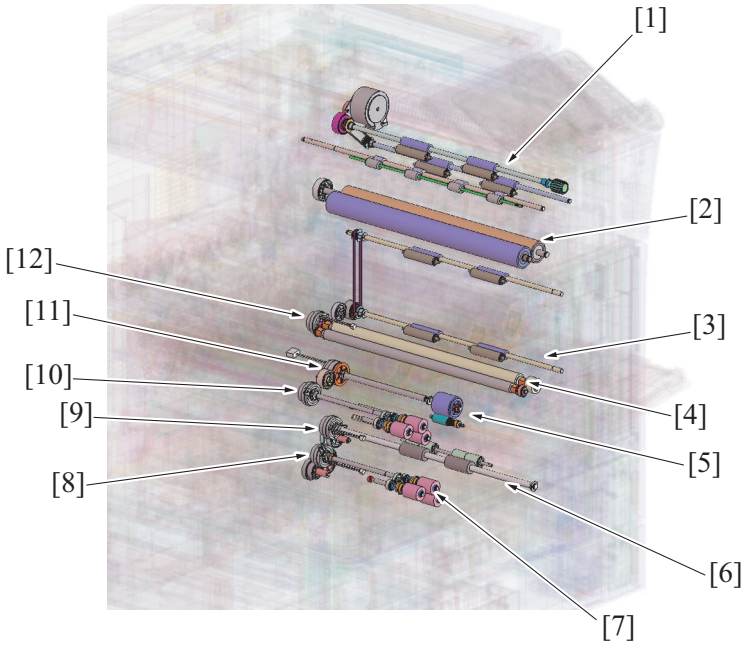


| | | | |
|---|---|---|---|
| [1] | ADU transport roller/1 | [2] | Pressure roller |
| [3] | ADU transport roller/4 | [4] | Registration roller |
| [5] | Manual bypass tray feed roller | [6] | Vertical transport roller |
| [7] | Feed roller | [8] | Tray 2 paper feed clutch (CL1) |
| [9] | Tray 2 vertical transport clutch (CL2) | [10] | Tray 1 paper feed clutch (CL3) |
| [11] | Bypass paper feed clutch (CL7) | [12] | Registration clutch (CL4) |

## 12.2 Drive

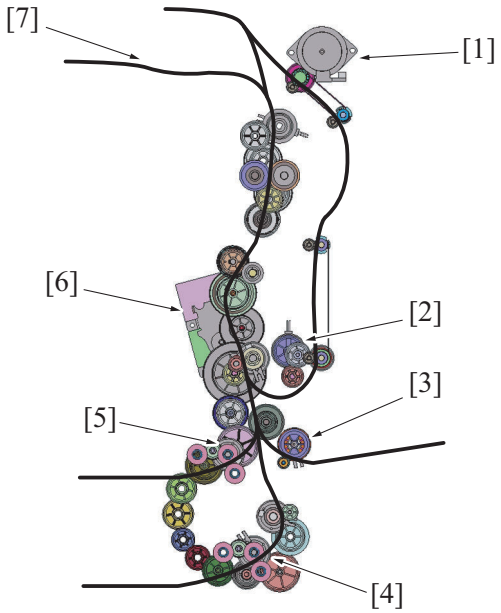


| | | | |
|---|---|---|---|
| [1] | Reverse motor (M4) | [2] | ADU transport clutch (CL6) |
| [3] | Bypass paper feed clutch (CL7) | [4] | Tray 2 vertical transport clutch (CL2) |
| [5] | Tray 1 paper feed clutch (CL3) | [6] | Transport motor (M1) |
| [7] | Paper path | - | - |

## 12.3 Operation

### 12.3.1 Vertical transport control

- The vertical transport section transports paper fed from tray 1, 2, or optional paper feed unit onto the registration section.
- The paper fed from tray 1 is transported onto the registration section by the tray 1 feed roller.
- The paper fed from the manual bypass tray is transported onto the registration section by the manual bypass tray feed roller.
- The paper fed from tray 2 is transported onto the registration section by the tray 2 vertical transport roller.

### 12.3.2 Transport clutch control

#### (1) Tray 2 vertical transport clutch

- The tray 2 vertical transport clutch is connected to the tray 2 vertical transport roller. When the tray 2 vertical transport clutch is energized, the driving force of the transport motor is transmitted, so that the tray 2 vertical transport roller is rotated.

### 12.3.3 Operation timing

#### (1) Tray 2 vertical transport roller

- The tray 2 paper feed sensor located downstream of the tray 2 feed roller detects the paper fed from the tray 2 feed roller.
- When the tray 2 vertical transport sensor located downstream of the tray 2 vertical transport roller along the paper path detects the leading edge of the paper fed from the feed roller, the tray 2 paper feed clutch is deenergized to disconnect the driving force of the transport motor. The pick-up roller and feed roller follow the movement of the paper, continuing rotating. The pick-up roller and feed roller stop rotating as soon as the paper moves past them.
- If the tray 2 vertical transport sensor is unable to detect the leading edge of paper even after the lapse of a predetermined period of time, the machine determines that there is a paper misfeed at tray 2.

### 12.3.4 Right door mechanism

- The machine has the right door to enable easy access into the inside of the machine for clearing a paper misfeed or performing other service jobs.
- The right door is mounted with the mechanisms of the vertical transport section, paper feed section (manual bypass tray), and the duplex section. For detailed functions of the paper feed section (manual bypass tray) and the duplex section, see the corresponding chapters.
- The registration unit (2nd transfer section, registration section, and duplex section) is found inside the right door when opened.
- The registration unit is not provided with a locking mechanism or open/close detection mechanism. The locking mechanism and open/close detection mechanism provided for the right door are used also for the registration unit.
  For details of the registration unit, see “O.13.1 Configuration.”

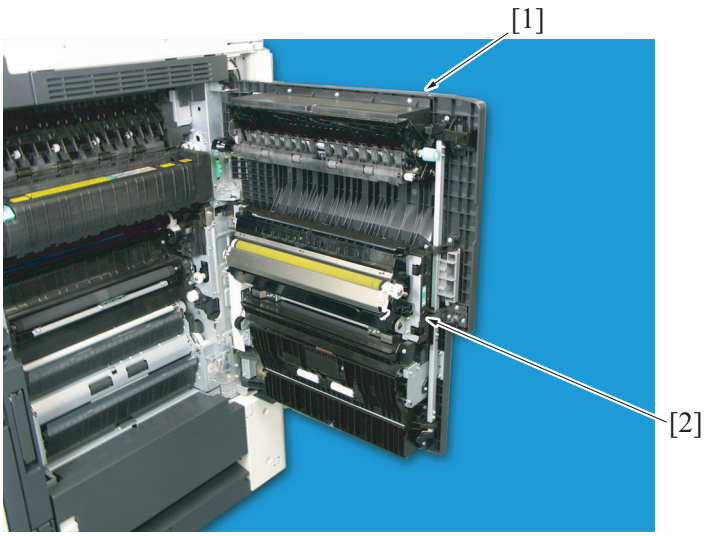


| | | | |
|---|---|---|---|
| [1] | Right door section | [2] | Registration unit |

Registration unit (registration section/ 2nd transfer section)

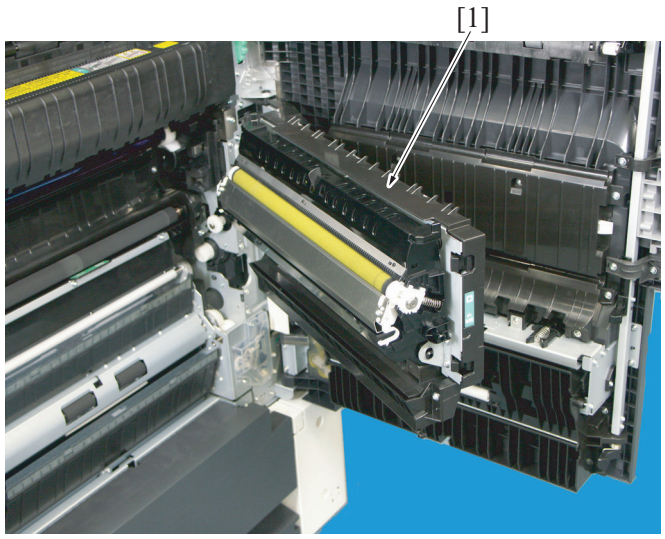


| | | | |
|---|---|---|---|
| [1] | Registration unit | - | - |

Registration unit (duplex section)

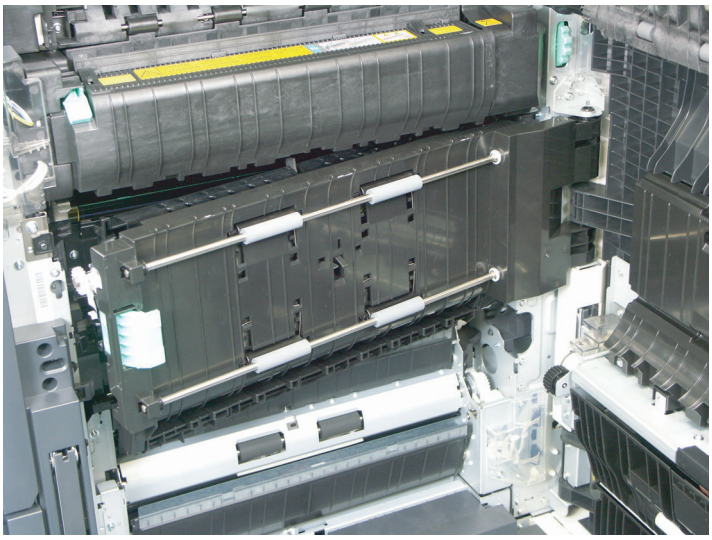

### (1) Right door locking mechanism

- The right door is provided with a locking mechanism.

#### (a) Unlocking the right door

- With drawing the lever of the right door to the front will disengage the door lock pawls (three) equipped at the front side of the right door.

#### (b) Locking the right door

- Close the registration unit and then close the right door. When the right door is closed in its correct position, the door lock pawls (three) equipped at the front side of the right door lock the right door in place.

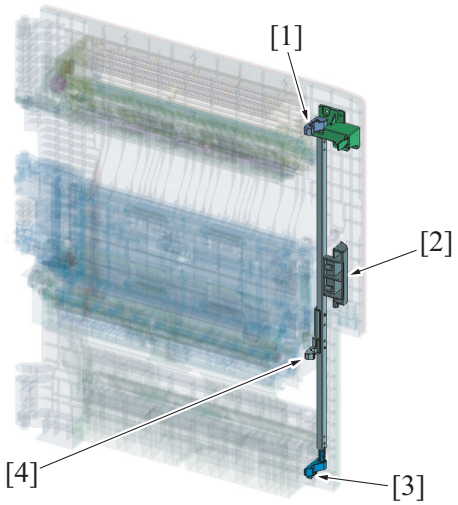


| | | | |
|---|---|---|---|
| [1] | Door lock pawl (upper) | [2] | Right door lever |
| [3] | Door lock pawl (lower) | [4] | Door lock pawl (center) |

### (2) Registration unit lock mechanism

*1.* When the right door is opened, the registration unit that is left locked to the right door is also opened.

- The registration unit can be separated from the right door when the registration unit lever is disengaged from the door lock pawl equipped on the right door side.

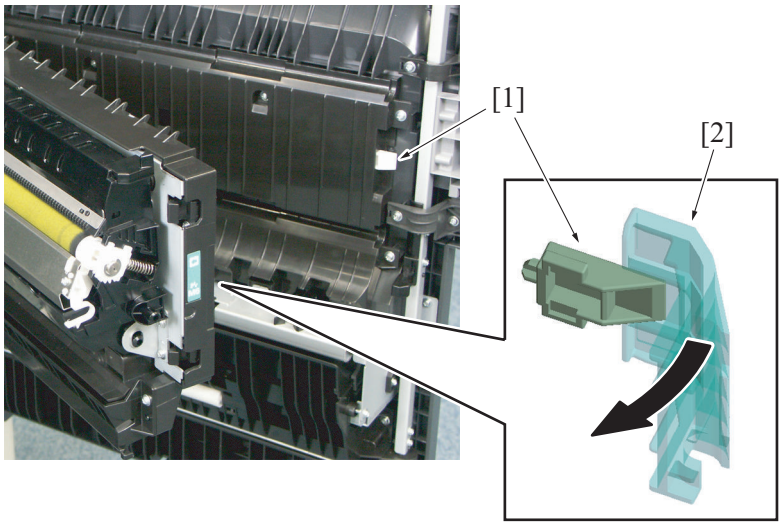


| | | | |
|---|---|---|---|
| [1] | Door lock pawl | [2] | Lever |

### (3) Right door open/close detection mechanism

- The right door switch detects that the right door is opened or closed.
- When the right door is closed, the open/close detection plate equipped at an upper portion at the front of the right door presses the actuator of the right door switch. This turns ON the right door switch and the machine determines that the right door is closed.
- When the right door is opened, the actuator of the right door switch is released. This turns OFF the right door switch and the machine determines that the right door is opened, giving a message that prompts the operator to close the right door.
- On determining that the right door is open, the machine prohibits the use of all jobs but the fax reception job. A paper misfeed results if the right door is opened during a print cycle.

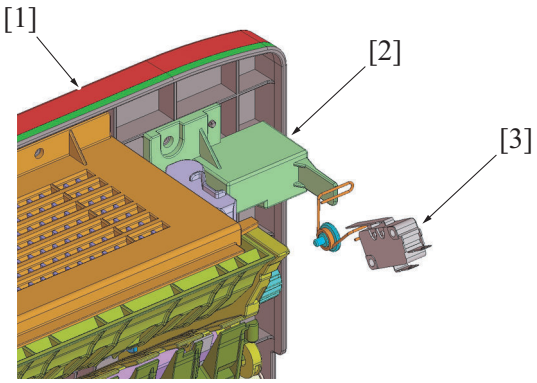


| | | | |
|---|---|---|---|
| [1] | Right door | [2] | Open/Close detection plate |
| [3] | Right door switch (SW3) | - | - |

# 13. REGISTRATION SECTION

## 13.1 Configuration

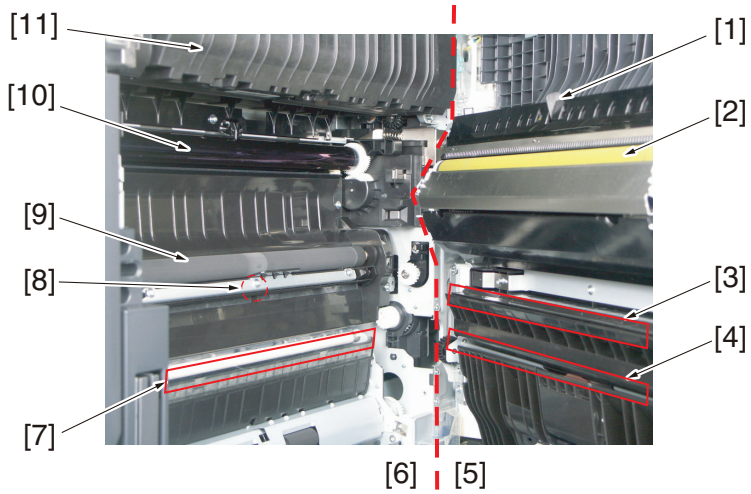


| | | | |
|---|---|---|---|
| [1] | Fusing loop actuator | [2] | 2nd transfer roller |
| [3] | Duplex section re-feed paper | [4] | Manual bypass tray feed paper |
| [5] | Right door side | [6] | Main body side |
| [7] | Tray 1 feed paper | [8] | Registration sensor (inside) |
| [9] | Registration roller | [10] | Transfer belt |
| [11] | Fusing unit | - | - |

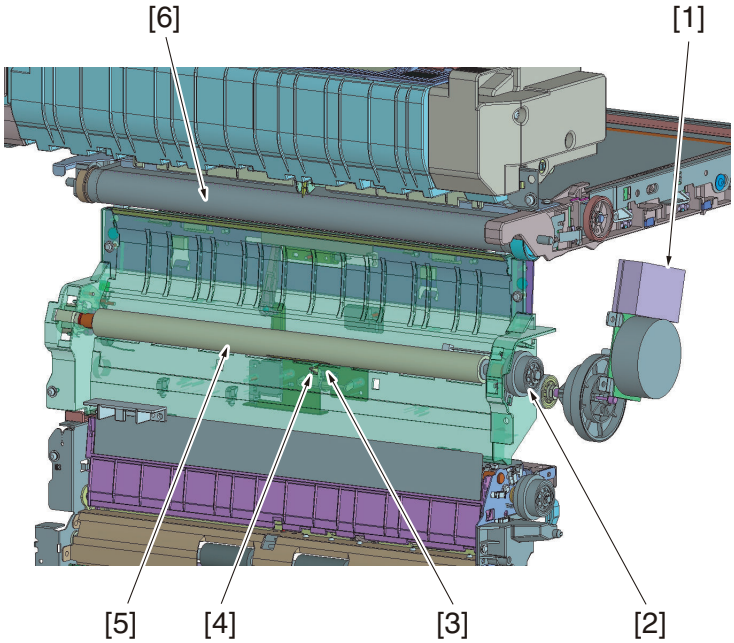


| | | | |
|---|---|---|---|
| [1] | Transport motor (M1) | [2] | Registration clutch (CL4) |
| [3] | Registration sensor (PS1) | [4] | Registration sensor actuator |
| [5] | Registration roller | [6] | Transfer belt |

## 13.2 Drive

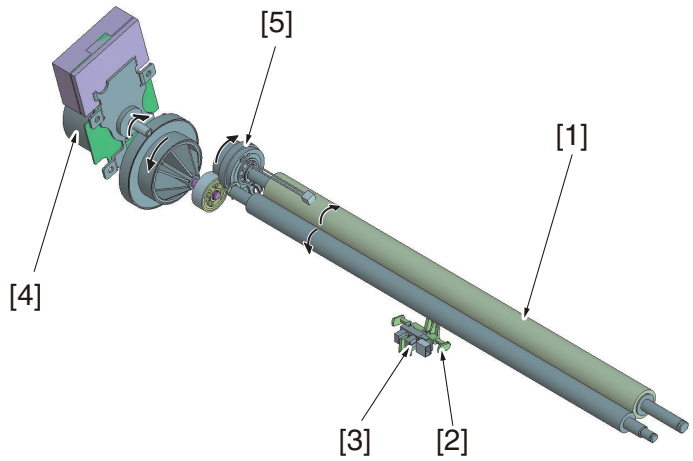


| | | | |
|---|---|---|---|
| [1] | Registration roller | [2] | Registration sensor actuator |
| [3] | Registration sensor (PS1) | [4] | Transport motor (M1) |
| [5] | Registration clutch (CL4) | - | - |

## 13.3 Operation

### 13.3.1 Registration control

- At the registration section, a loop is formed in the paper between the tray 1 paper feed roller (or tray 2 vertical transport roller or bypass paper feed clutch) and the registration roller to thereby minimize skew in paper.

#### (1) Control

1. When the registration clutch is energized, the transport motor is connected to the registration roller, so that the registration roller is rotated.

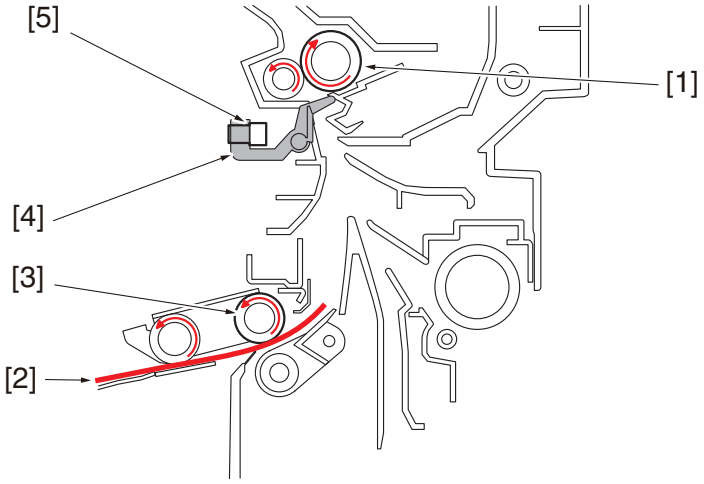


| | | | |
|---|---|---|---|
| [1] | Registration roller rotating | [2] | Paper |
| [3] | Tray 1 feed roller | [4] | Actuator |
| [5] | Registration sensor (PS1) | - | - |

2. When the paper reaches the registration sensor actuator, the registration sensor output changes and the registration roller is stopped.

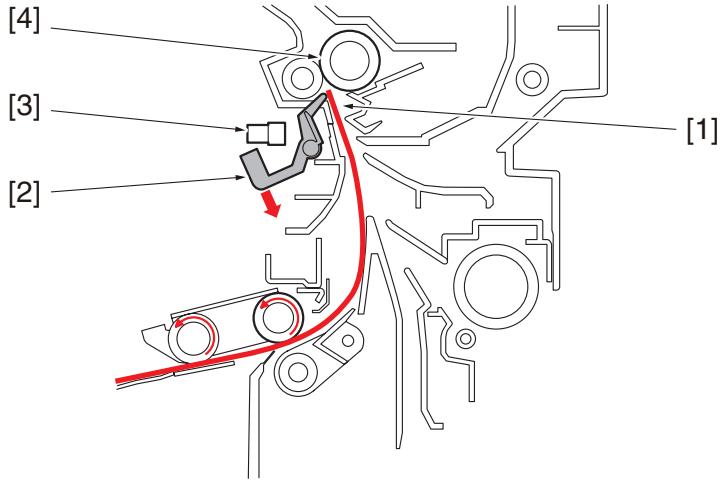


| | | | |
|---|---|---|---|
| [1] | Paper reaching registration sensor | [2] | Registration sensor unblocked |
| [3] | Registration sensor (PS1) | [4] | Registration roller stopping |

*3.* Because the registration roller stops, a loop is formed in the paper, which minimizes skew in the paper.

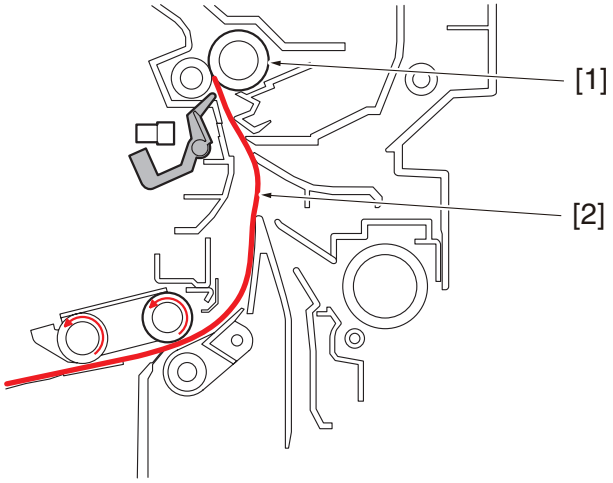


| | | | |
|---|---|---|---|
| [1] | Registration roller stopping rotating | [2] | Loop formed in paper |

*4.* The registration roller starts rotating again at timing at which to synchronize the image start position with paper position.

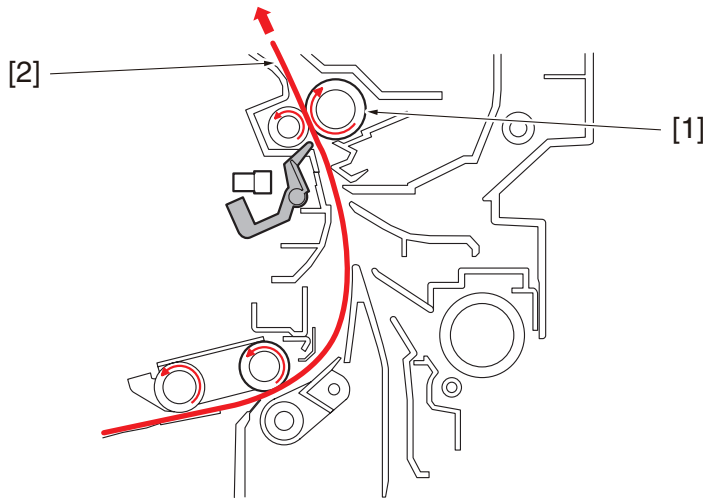


| | | | |
|---|---|---|---|
| [1] | Registration roller starting rotating again | [2] | Transporting paper to 2nd transfer section |

### (2) Adjustment

- The amount of the loop of the paper can be adjusted in the [Service Mode] -> [Machine] -> [Printer Reg. Loop Adj.].

Changing the adjustment value will vary timing at which the tray 1 paper feed clutch (or tray 2 vertical transport clutch) is deenergized, which results in the length of loop being varied.

# 14. FUSING SECTION

## 14.1 Configuration

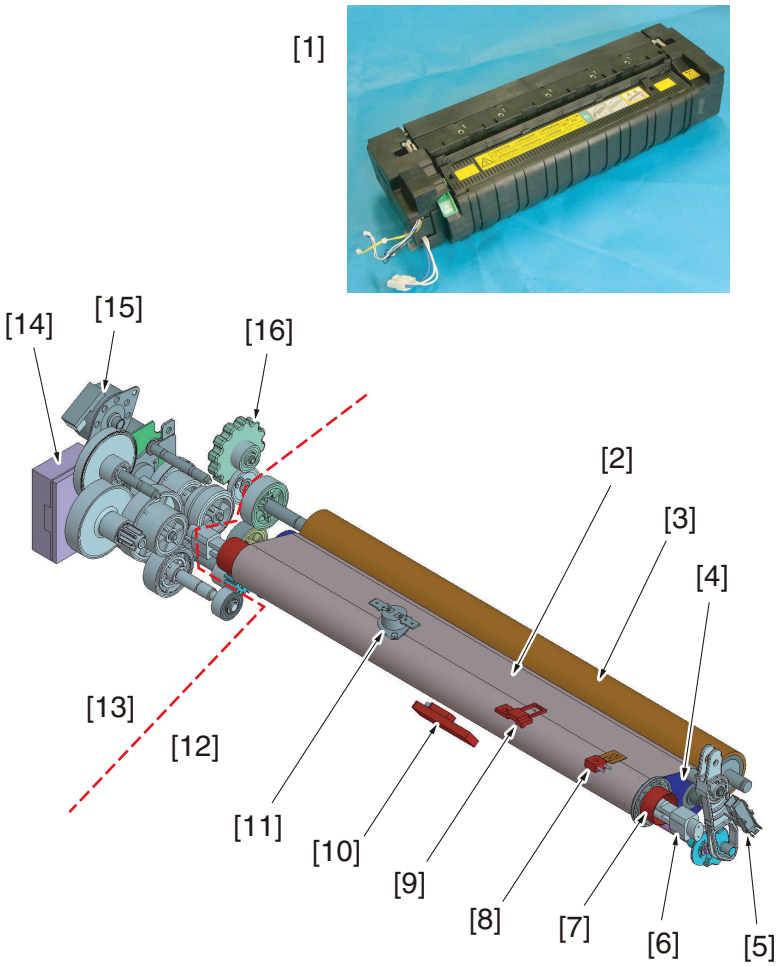


| | | | |
|---|---|---|---|
| [1] | Fusing unit | [2] | Fusing belt |
| [3] | Pressure roller | [4] | Fusing roller |
| [5] | Fusing pressure home sensor (PS38) | [6] | Fusing heater lamp assy |
| [7] | Heating roller | [8] | Heating roller thermistor/1 (TH1) |
| [9] | Heating roller thermistor/2 (TH2) | [10] | Heating roller temperature sensor (TEMS) |
| [11] | Heating roller thermostat (TS1) | [12] | Fusing unit side |
| [13] | Main body side | [14] | Fusing motor (M3) |
| [15] | Fusing pressure motor (M11) | [16] | Jam removal dial |

## 14.2 Drive

### 14.2.1 Fusing section roller drive

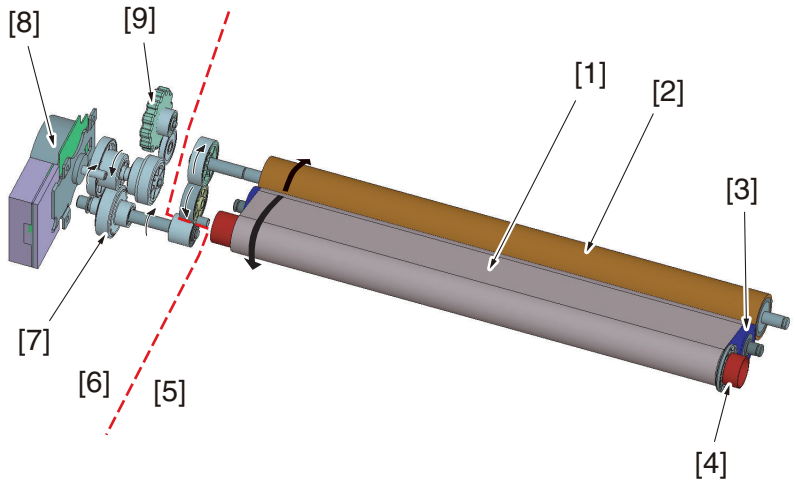


| | | | |
|---|---|---|---|
| [1] | Fusing belt | [2] | Pressure roller |
| [3] | Fusing roller | [4] | Heating roller |
| [5] | Fusing unit side | [6] | Main body side |
| [7] | Fusing drive release gear | [8] | Fusing motor (M3) |
| [9] | Jam removal dial | - | - |

### 14.2.2 Pressure roller pressure drive

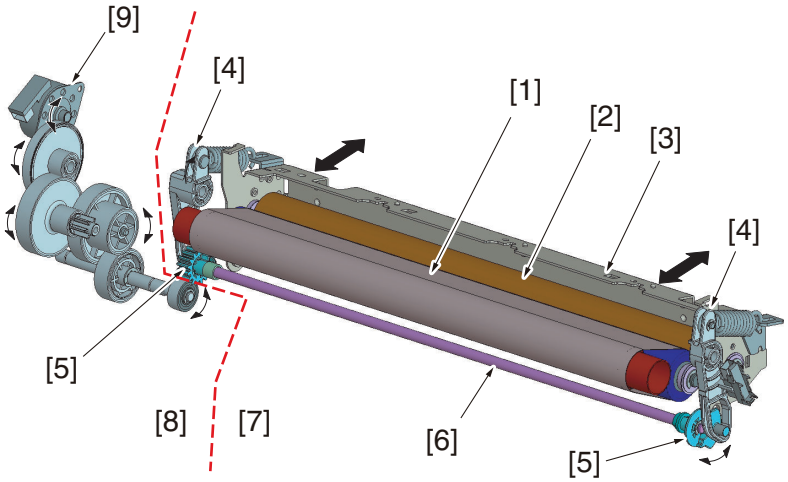


| | | | |
|---|---|---|---|
| [1] | Fusing belt | [2] | Pressure roller |
| [3] | Pressure frame | [4] | Pressure lever |
| [5] | Pressure cam | [6] | Cam shaft |
| [7] | Fusing unit side | [8] | Main body side |
| [9] | Fusing pressure motor (M11) | - | - |

## 14.3 Operation

### 14.3.1 Fusing drive release mechanism

- At the fusing drive position, transmit the driving force of the fusing motor to the pressure roller by a fusing drive release gear.
- Opening the right door places the fusing drive release lever in the fusing drive release position.
- With the fusing drive release lever in the fusing drive release position, the fusing drive release gear is disconnected from the fusing motor and, instead, connected to the jam removal dial.
- If a paper misfeed occurs in the fusing section, opening the right door allows the jam removal dial to be used for removing the misfed paper.

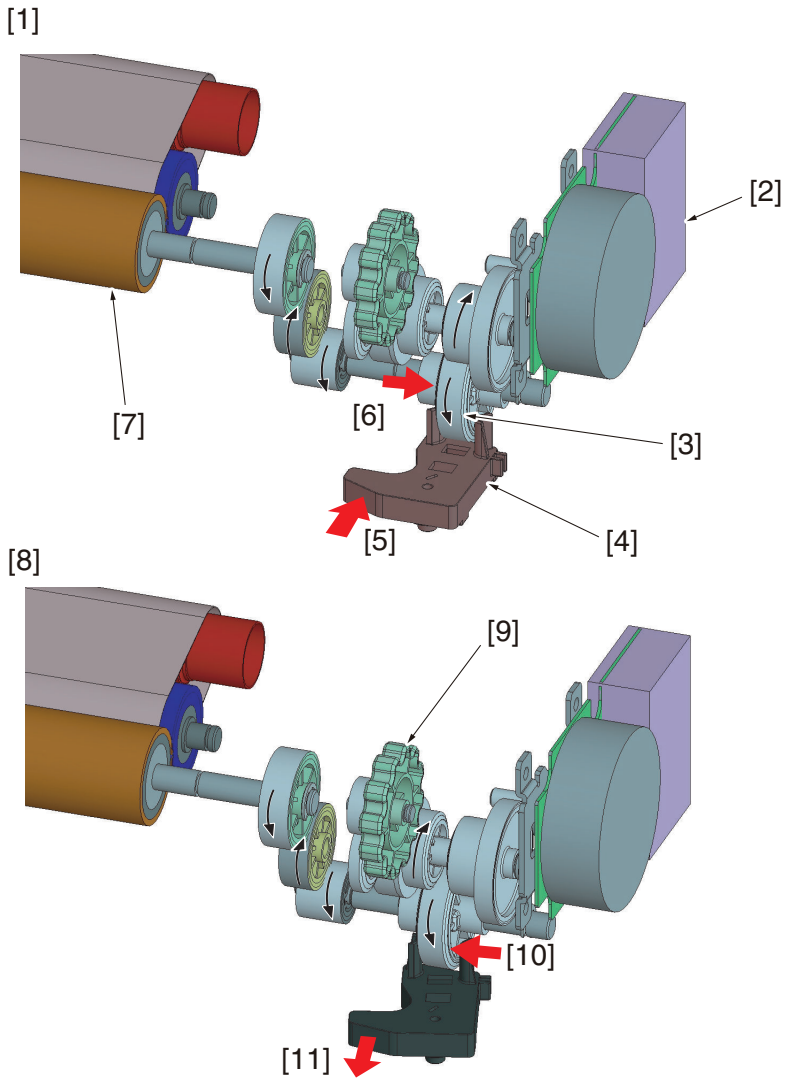


| | | | |
|---|---|---|---|
| [1] | Fusing drive position | [2] | Fusing motor (M3) |
| [3] | Fusing drive release gear | [4] | Fusing drive release lever |
| [5] | Right door close position | [6] | Connected to fusing motor |
| [7] | Pressure roller | [8] | Fusing drive release position |
| [9] | Jam removal dial | [10] | Connected to jam removal dial |
| [11] | Right door open position | - | - |

### 14.3.2 Fusing speed correction

#### (1) Fusing loop control

- To prevent double transferred images and brush effects that occur due to a difference in speed between paper transport during image transfer and fusing, a loop is formed in the paper between the 2nd transfer and fusing sections.
- The fusing loop sensor detects the length of the loop formed in the paper between the 2nd transfer section and the fusing roller.
- The fusing motor increases or decreases the fusing speed according to the length of loop in the paper, thereby ensuring that the length of loop falls within a predetermined range.

| Fusing loop sensor | Loop amount | Fussing speed |
|---|---|---|
| Blocked | Large | Speed-up |
| Unblocked | Small | Slowdown |

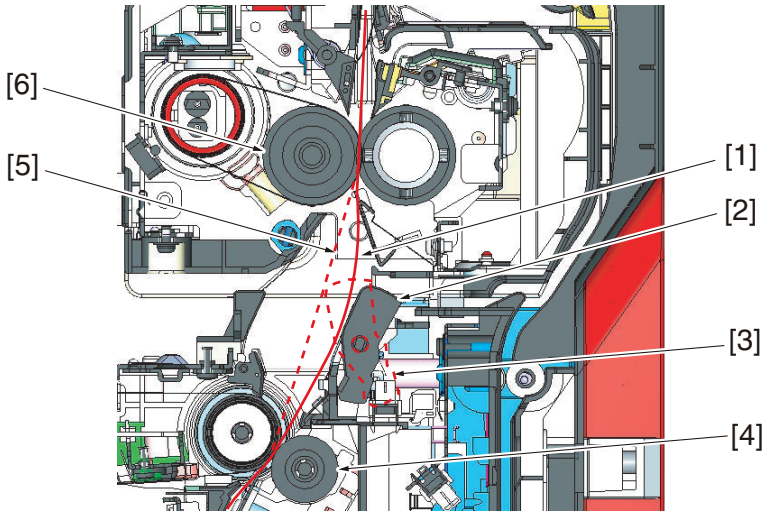


| | | | |
|---|---|---|---|
| [1] | Loop length: large | [2] | Actuator |
| [3] | Fusing loop sensor (PS2) | [4] | 2nd transfer roller |
| [5] | Loop length: small | [6] | Fusing roller |

#### (a) Operation timing

- It starts controlling when the front-edge of the paper reaches to the predetermined position before the fusing roller.
- The fusing speed is decelerated so that a loop is formed in the paper between the 2nd transfer roller and the fusing roller.
- When the paper loop amount is large, the fusing loop sensor is blocked, and the fusing speed is increased.
- When the paper loop amount is small, the fusing loop sensor is unblocked, and the fusing speed is decreased.
- The fusing speed is increased or decreased as necessary to make sure that the paper loop amount falls within a predetermined range, thereby absorbing a difference between the fusing speed and image transfer speed.
- The fusing loop control will finish after the trailing of the paper passes the 2nd transfer roller.

#### (b) Fusing speed adjustment

- If double transferred images or brush effects occur due to inadequate paper loop before fusing, adjust the fusing speed using [Service Mode] -> [Machine] -> [Fusing transport speed].
- For detailed adjustment method, see “I.5.4.3 Fusing Transport Speed”.

### 14.3.3 Fusing pressure/retraction control

- To maintain durability of the fusing belt, the fusing pressure roller is retracted *1 from the fusing belt during any time other than a print cycle. (The roller is, however, retracted during a print cycle using envelopes.)
  *1: The pressure roller does not completely retract from the fusing belt but is slightly pressed to the fusing belt.
- The fusing pressure roller is pressed against, and retracted from, the fusing belt by rotating the pressure cam through forward or backward rotation of the fusing pressure motor.
- The fusing pressure home sensor detects the pressure roller at its pressure position.
- The position at which the fusing pressure roller is retracted is controlled by the period of time (number of pulses) through which the fusing pressure motor is rotated.
- When there is no change in the output of the fusing pressure home sensor even after the lapse of a predetermined period of time after the fusing pressure motor has started rotating, the machine determines that there is a pressure/retraction fault and displays the “Trouble code C3101: Pressure roller separation failure” message or “Trouble code C3103: Pressure roller release failure” message.

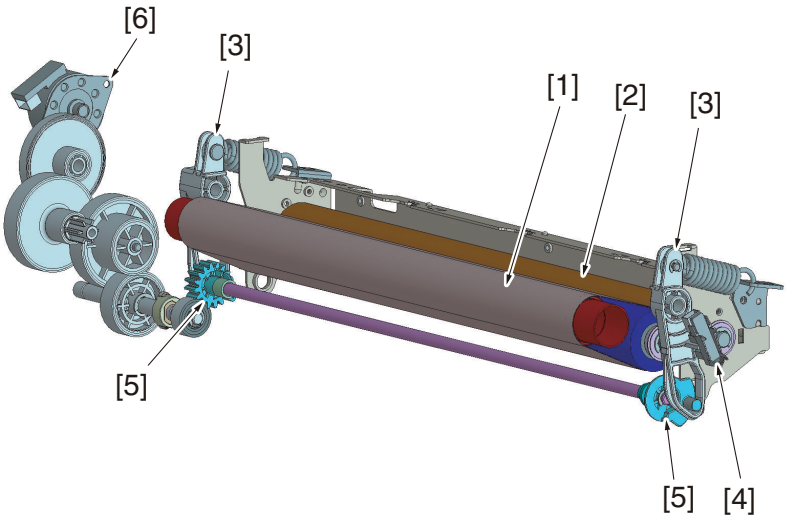


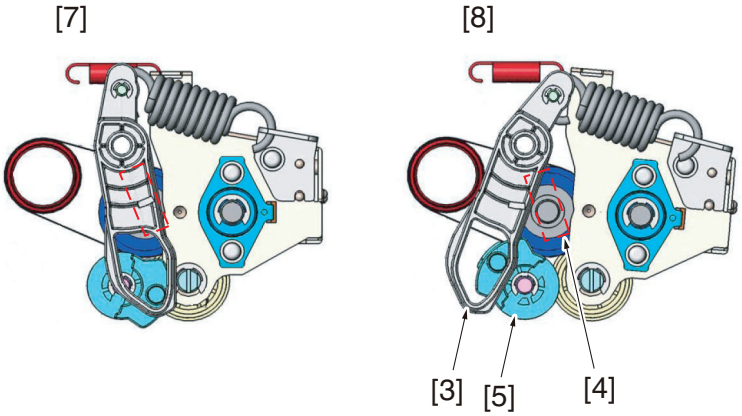


| | | | |
|---|---|---|---|
| [1] | Fusing belt | [2] | Pressure roller |
| [3] | Pressure lever | [4] | Fusing pressure home sensor (PS38) |
| [5] | Pressure cam | [6] | Fusing pressure motor (M11) |
| [7] | Pressure position | [8] | Release position |

### (1) Operation timing

| Condition | | Pressure roller position |
|---|---|---|
| Warm-up | At the start of a warm-up cycle | Pressure |
| Pre-standby | At the start of the pre-standby | Pressure |
| Standby | At the start of the standby | Retraction |
| Printing | For envelopes | Retraction |
| | For paper types other than envelopes | Pressure |
| When printing the multi jobs | When current printing is for other than envelopes and the next job is for the envelopes. | Pressure -> Retraction *1 |
| | When current printing is for the envelopes and the next job is for other than envelopes. | Retraction -> Pressure *1 |
| Energy save mode (lower power mode, sleep mode) | | Retraction |
| When a malfunction or misfeed occurs | | Retraction |
| When the fusing heater lamp is turned OFF (a door opened, a malfunction occurs, or other factors.) | | Stop |

- *1: Pressure/retraction will be conducted after the currently printed paper passes between the fusing belt and the pressure roller. The timing for the next paper to be fed will be delayed during the pressure/retraction and keep the certain period of time between feeding the papers.

## 14.3.4 Paper transport control

- The 2nd transfer roller transports paper onto the fusing unit.
- The fusing unit uses the fusing motor to drive the fusing pressure roller, thereby transporting paper onto the exit/reverse section.
- Fusing motor speed control is completed before the paper enters the fusing unit.
- The paper fed into the paper exit/reverse section is detected by the paper exit sensor before being transported by the paper exit roller.
- The fusing motor is deenergized after the last sheet of paper is fed into the finisher or out into the exit tray.

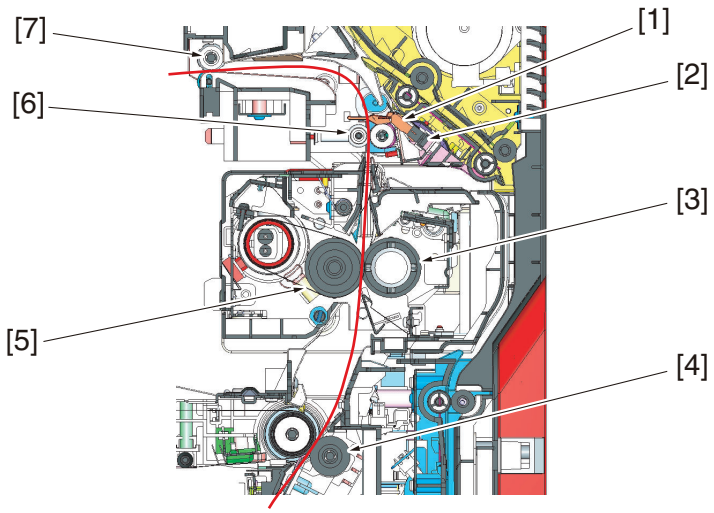


| | | | |
|---|---|---|---|
| [1] | Actuator | [2] | Paper exit sensor (PS3) |
| [3] | Pressure roller | [4] | 2nd transfer roller |
| [5] | Fusing roller | [6] | Exit tray front roller |
| [7] | Exit roller | - | - |

### 14.3.5 Paper separation mechanism

- Paper separator claws are provided on the fusing pressure roller side and the fusing belt side in order to separate the sheet of paper reliably after the fusing process.
- Three contact type paper separator claws are installed on the fusing pressure roller side.
- Five noncontact type paper separator claws are installed on the fusing belt side.

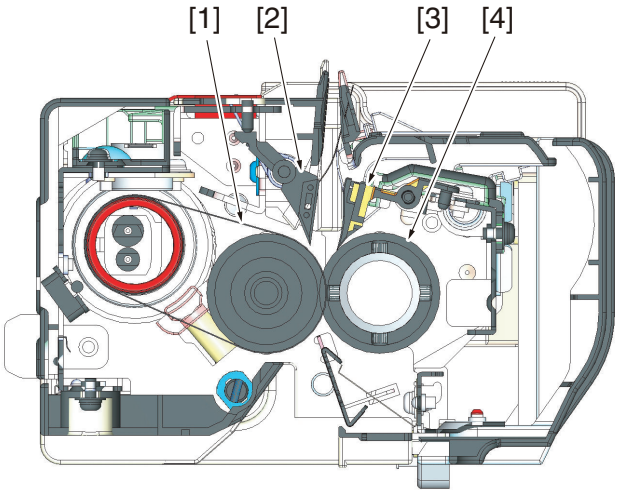


| | | | |
|---|---|---|---|
| [1] | Fusing belt | [2] | Paper separator claws (noncontact type) |
| [3] | Paper separator claws (contact type) | [4] | Pressure roller |

### 14.3.6 Fusing temperature control

- Fusing temperature control uses the heating roller temperature sensor and the heating roller thermistor that detect the surface temperature of the fusing belt to turn ON or OFF the fusing heater lamp as necessary.
  The fusing heater lamp when turned ON heats the fusing belt to a set temperature.

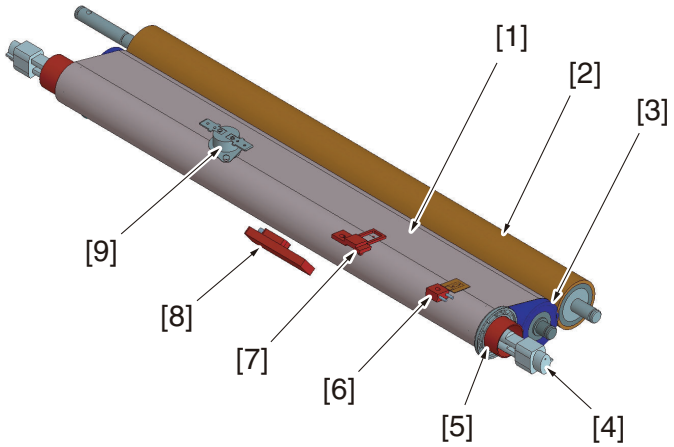


| | | | |
|---|---|---|---|
| [1] | Fusing belt | [2] | Pressure roller |
| [3] | Fusing roller | [4] | Fusing heater lamp assy |
| [5] | Heating roller | [6] | Heating roller thermistor/1 (TH1) |
| [7] | Heating roller thermistor/2 (TH2) | [8] | Heating roller temperature sensor (TEMS) |
| [9] | Heating roller thermostat (TS1) | - | - |

### (1) Fusing heater lamp

- The heating roller contains a fusing heater lamp assy in it. The fusing heater lamp turns ON to generate heat, which heats the heating roller and fusing belt.
- The fusing heater lamp assy consists of two heaters, each having a unique heating range different from each other.
  - The fusing heater lamp/1 (long) uniformly heats the entire area of the heating roller.
  - The fusing heater lamp/2 (short) heats only the central portion of the heating roller.
- The fusing heater lamp is turned ON or OFF according to the width of the paper and the surface temperature of the fusing belt.
  - For a paper width of 209 mm or less, the fusing heater lamp/2 is used to heat the central portion.
  - For a paper width exceeding 209 mm, the surface temperature of the fusing belt is measured and the fusing heater lamp/1 and the fusing heater lamp/2 are alternately turned ON.

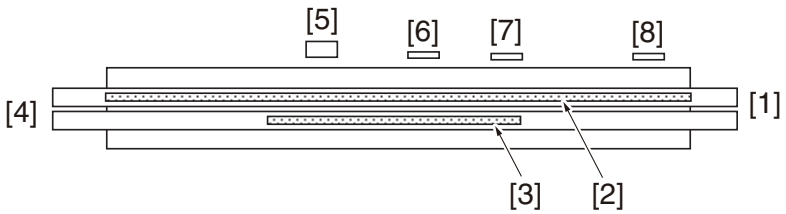


| | | | |
|---|---|---|---|
| [1] | Front of machine | [2] | Fusing heater lamp/1 (FH1) |
| [3] | Fusing heater lamp/2 (FH2) | [4] | Rear of machine |
| [5] | Heating roller thermostat (TS1) | [6] | Heating roller temperature sensor (TEMS) |
| [7] | Heating roller thermistor/2 (TH2) | [8] | Heating roller thermistor/1 (TH1) |

### (2) Temperature control chart

* An example when a machine is warmed up under a normal ambient condition

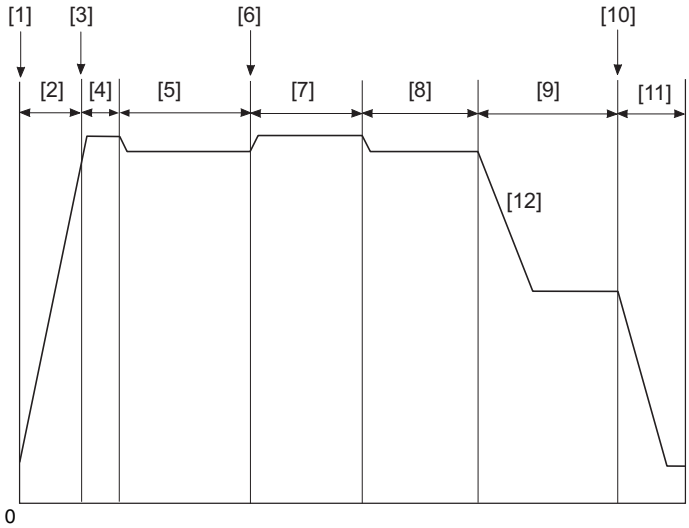


| | | | |
|---|---|---|---|
| [1] | Main power switch ON | [2] | Warm-up control |
| [3] | Warm-up completed | [4] | Pre-standby control |
| [5] | Standby control (including a countermeasure against overshoot) | [6] | Print request |
| [7] | Print control | [8] | Standby |
| [9] | Low power mode | [10] | Entry in sleep mode |
| [11] | Sleep mode | [12] | Fusing belt temperature |

### (3) Fusing temperature control during warm-up

- To prevent image fixability from being degraded due to environmental changes when the main power switch is turned ON, three different warm-up modes are incorporated for fusing temperature control.
- The warm-up mode is performed “at low temperatures”, “at ordinary temperatures”, or “under high humidity condition”.
- In the warm-up mode under high humidity condition, the warm-up time is extended to prevent paper from curling and the difference in temperature between the fusing belt and fusing pressure roller is minimized.
- When the temperature of the fusing belt reaches the warm-up completion temperature, control is passed onto the pre-standby process.

| Warm up mode | Environment | |
|---|---|---|
| | Machine interior temperature | Machine interior humidity (absolute humidity *1) |
| Warm-up at low temperatures | 18 °C or less | Not judged by absolute humidity |
| Warm-up at ordinary temperatures | More than 18 °C to 32 °C or less | Less than a predetermined value |
| Warm-up under high humidity condition | More than 32 °C | Predetermined value or more |

- *1: Absolute humidity: water content contained in the air (1 m3) as steam regardless of the temperature

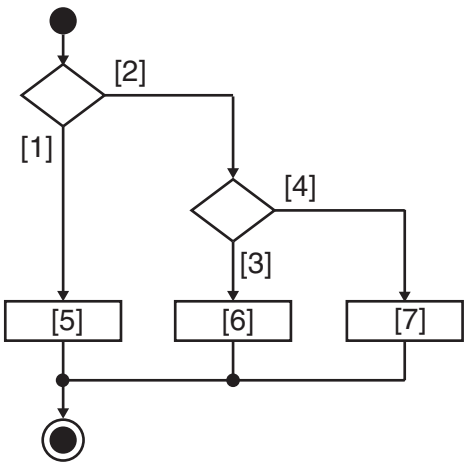


| | | | |
|---|---|---|---|
| [1] | Machine interior temperature 18 °C or less | [2] | Machine interior temperature exceeding 18 °C |
| [3] | Absolute humidity, specified value or more | [4] | Absolute humidity, less than the specified value |

| | | | |
|---|---|---|---|
| [5] | Warm-up at low temperatures | [6] | Warm-up under high humidity condition |
| [7] | Warm-up at ordinary temperatures | - | - |

### (4) Temperature control during pre-standby

- After the warm-up completion temperature is reached, control is then passed onto the pre-standby process.
- The temperature control in the pre-standby state turns ON or OFF the fusing heater lamp as necessary in order to maintain the fusing belt temperature at a level that enables printing.
- A print job, when received during the pre-standby state, can be started without waiting.

### (5) Temperature control during stand-by

- If no print request is received after the temperature control in the pre-standby state is started, control is passed onto the standby process.
- The temperature control in the standby state maintains the fusing belt temperature at a level lower than the temperature that enables printing.
- The control is intended to shorten time it takes the temperature to reach the printable level when a print request is received.
- An overshoot preventive process may be performed before control is passed onto the temperature control in the standby state.
- For a 30-min. period following the start of the standby process, the fusing motor alternately repeats rotation (at low speed) and stop cycles.
  After the 30-min. period, the fusing motor is deenergized.

### (6) Temperature control during the print cycle

#### (a) Temperature control

- The machine enters a print state as it receives a print control and carries out a print cycle at a set temperature corresponding to the type of paper selected for the job.
- The fusing temperature is measured during the print cycle and temperature control suitable for the print condition is performed accordingly.

### (7) Energy save mode

- The machine enters the energy save mode from any standby state to thereby reduce power consumption (TEC value).
- The energy save mode may be either the low power mode or sleep mode, whichever is enabled depending on the set conditions.

**NOTE**
**TEC value (Typical Electricity Consumption):**

- **Energy saving criteria for copiers and printers to comply with the Energy Start program.**
- **Power consumption (kWh) at the office assuming operation of a product for one week (5 working days + 2 holidays) is calculated from the print speed and power consumption of the product.**

#### (a) Temperature control during low power mode

- To reduce power consumption in the low power mode, the surface temperature of the fusing belt is made lower than the controlled temperature under “temperature control during the standby state”.
- In the low power mode, the printable temperature can be recovered within a period of time shorter than warm-up.

#### (b) Temperature control during sleep mode

- To reduce power consumption during the sleep mode, power to the fusing heater lamp is shut down to stop heating the fusing belt.
- If the fusing belt temperature is decreased to room temperature, the printable temperature can be recovered within the same period of time as that of warm-up.

### (8) Fusing-related control

- The following types of control are available as they relate to fusing temperature:
- For detailed setting method, see each item.

#### (a) Service Mode

- [Machine/Fusing Temperature]
- [Machine/Heater Control Level].
- [System 1/Warmup]
- [System 2/Smart Fusing Control]

#### (b) Enhanced Security

- [Engine FW DipSW / No.5 Choice of high humidity circumstance]
- [Engine FW DipSW / No.13 Choice of securing fusibility]

## 14.3.7 Plain paper fusing temperature control

- Two different target temperatures control the printing on plain paper.

| Basis weight | Specific controls |
|---|---|
| Plain paper (60g/$m^2$ - 70g/$m^2$) | The base weight is limited to 60g/$m^2$ - 70g/$m^2$. Power consumption (TEC value) is controlled through lowering the target temperature to lower than the normal fusing temperature. |
| Plain paper (60g/$m^2$ - 90g/$m^2$) | The normal target temperature controls the fusing temperature control of plain paper. |

### (1) Setting procedure

Display example

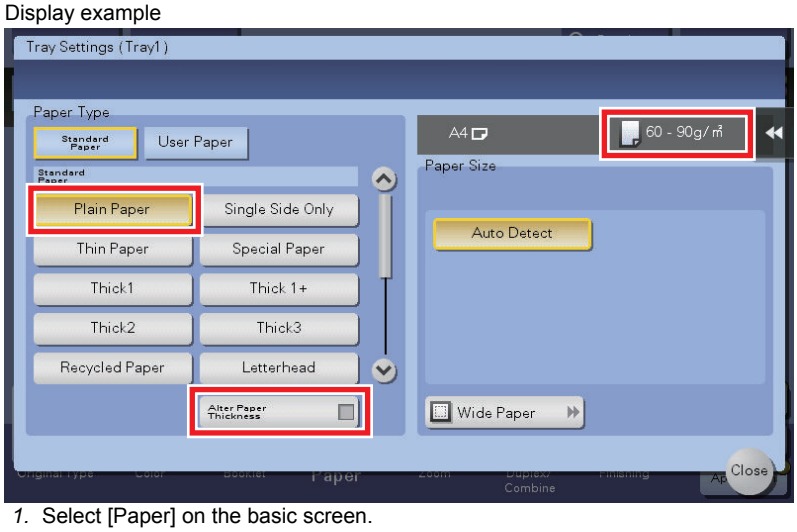


1. Select [Paper] on the basic screen.
2. Select your desired paper feed port and tap [Change Tray Setting].
3. Select [Plain Paper] and tap [Alter Paper Thickness] to select "Plain Paper (60g/m2 - 70g/m2)".
   A "check mark" will be displayed in the check box of the [Alter Paper Thickness] key.
4. Tap the [Alter Paper Thickness] key again to select "Plain Paper (60g/m2 - 90g/m2)".
   The "check mark" in the check box of the [Alter Paper Thickness] key will disappear.

**NOTE**

- **"Plain Paper (60g/m2 to 70g/m2)" is specified by default only for Japan.**
- **You can only use the [Alter paper thickness] key for plain paper.**

## 14.3.8 Smart Fusing Control

- Lower the target temperature as much as possible according to the information of each sheet of paper to control the fusing temperature adjustment. In this way, the power consumption (TEC value) is controlled.
- Smart fusing control is only performed when the execution conditions below are met.
- If these execution conditions are not met, the normal fusing temperature control is performed.
- Smart fusing control can also prohibit control execution from [Service Mode / System 2 / Smart Fusing Control].
  For details on how to configure the settings, see "I.5.16.33 Smart Fusing Control".

### (1) Smart fusing control execution conditions

| Function | | Execution conditions |
|---|---|---|
| Temp-Inside | | 10 °C and above |
| Print mode | | Only for PC printing, BOX printing, and direct printing (USB)*1 |
| Basic Settings | Print zoom | Only 100% |
| | Paper type | Plain paper only |
| Layout | Combination | 1 in 1 only |
| | Image shift | No |
| Cover sheet insertion | Cover sheet | No |
| | Back cover | No |
| | Inter sheet | No |
| | OHP interleave | No |
| | Booklet | No |
| Image quality | Select color | Black mode only |
| | Gloss mode | No |
| | Toner save (density 50%) | No |
| | Edge enhancement | No |
| | Negative-positive reversal | No |
| | Maximum black density | 80% or more to 90% or less |
| | Line width | 1.5pt or less |
| | Character decoration | Normal characters only*2 |
| | Character size | 16pt or less |
| | Image object | No |
| Stamp/page printing | No watermarks | No |
| | No overlay | No |
| | No copy security | No |
| | No header/footer | No |
| | No management number | No |

- *1: Copies are not included in the control

- *2: Bold characters are not included in the control

### 14.3.9 Protection from abnormal temperatures

#### (1) First approach: software protection

- If the heating roller temperature sensor detects a predetermined temperature or more continuously, the temperature is determined to be abnormally high and a “trouble code C3725: Fusing abnormally high temperature detection (Main of the heating side)” will be displayed.
- If the heating roller thermistor/1 detects a predetermined temperature or more continuously, the temperature is determined to be abnormally high and a “trouble code C3722: Fusing abnormally high temperature detection (Edge of the heating side)” will be displayed.
- If the heating roller thermistor/2 detects a predetermined temperature or more continuously, the temperature is determined to be abnormally high and a “trouble code C3726: Fusing abnormally high temperature detection (Center of the heating side)” will be displayed.
- When the trouble code is displayed, printing will be prohibited.

#### (2) Second approach: hardware protection

- A different protection is provided when the CPU overruns, becoming unable to detect the malfunction of an abnormally high temperature. If the heating roller temperature sensor detects an abnormal temperature, the heater relay of the DC power supply is turned OFF through the MFP board. Power supply to the fusing heater lamp is then shut down.
- When the hardware circuit in the MFP board detects the heater relay being OFF, the temperature is judged to be abnormally high. Trouble code C3731: Fusing abnormally high temperature detection (Hard protector) will be displayed.
- Through these control procedures, the power supply to the heater lamps can be shut down before the thermostat is activated. It thereby suppresses damage to the fusing unit itself.

#### (3) Third approach: thermostat protection

- If detection of the abnormally high temperature through approaches 1 and 2 above is not possible due to a defective the heating roller temperature sensor, heating roller thermistor or other reason, the thermostat comes into play to shut down the power supply to the heater lamp.

### 14.3.10 Fusing PPM control

#### (1) PPM control

- To achieve the intended level of fixability of printed images, the PPM control reduces the number of printed pages per minute by widening the distance between sheets of paper.

| PPM mode | Control execution conditions | Purpose | Specific controls | Print productivity *1 |
|---|---|---|---|---|
| Low temperature environment mode | Room temperature at the start of the print cycle is 18°C or less | To achieve the intended level of fixability under low temperature environment | To prevent fixability from being degraded in a multi-print cycle, paper-to-paper distance is widened to thereby limit a decrease in the fusing temperature. | 100%: default value<br>90%<br>80%<br>70%<br>60%<br>50% |
| High humidity environment mode *2 | Environmental humidity at the start of the print cycle is a predetermined value or more | To suppress occurrence of paper curl under high humidity environment | Paper-to-paper distance is widened in a multi-print cycle run under high humidity environment so as to prevent paper from curling, thereby achieving a required fusing temperature. | 100%: default value<br>70%<br>50% |
| Paper curl suppression mode | “Mode 3” is selected for “Change Warm Up Time” of the service mode | To suppress occurrence of paper curl under conditions other than high humidity environment | Paper-to-paper distance is widened in a multi-print cycle run under any condition other than high humidity environment so as to prevent paper from curling, thereby achieving a required fusing temperature. | 100%: default value<br>50% |
| Heating roller end temperature rise suppression mode | • Print request is received for paper with a paper width of 209 mm or less<br>• Temperature of the heating roller ends becomes a predetermined value or more | To suppress inordinate rise in temperature on heating roller ends in a print cycle using paper of a small size | Paper-to-paper distance is widened in a multi-print cycle so as to prevent the temperature on ends of the heating roller from increasing, thereby promoting reduction in temperature. | 100%: default value<br>90%<br>80%<br>70%<br>60%<br>50%<br>40%<br>30% |
| Reduced power supply mode | Only an insufficient power is supplied to the fusing heater lamp, resulting in a fusing temperature lower than a predetermined value | To achieve the intended level of fixability under low power supply condition | To prevent fixability from being degraded in a multi-print cycle, paper-to-paper distance is widened to thereby limit a decrease in the fusing temperature. | 70%: default value<br>50% |
| Thin paper mode | “100%” is selected for “PPM Control Choice” of the service mode | To increase the print productivity of thin paper | Paper-to-paper distance is narrowed to thereby increase productivity. | 100%<br>70%: default value *3 |

| | | | | |
|---|---|---|---|---|
| | | and recycled paper. To increase productivity during printing using thin paper.<br>* The choice of 100% may result in paper curling. | | |

- *1: Exemplary calculation of print speed: If 36 ppm can be achieved at a print productivity of 100% on A4 plain paper, a change in print productivity to 90% results in 32.4 ppm.
- *2: Execution of the control for the high humidity environment mode can be prohibited by turning ON "No. 5 PPM control (high humidity environment mode) prohibited" of Engine FW DIP switch of Enhanced Security of the service mode.
- *3: For recycled paper, the print productivity will be set to 70% when “Mode 3” is selected for warm-up choice. For thin paper, the print productivity will be set to 70% regardless of the mode setting for warm-up choice.

### 14.3.11 Fusing unit new article detection

- The fusing unit is not provided with any new article detection mechanism. If the fusing unit is replaced with a new one, therefore, “New Release” of “Fusing Unit” must be performed in “Counter/Life” of the Service Mode.

### 14.3.12 Fusing unit life detection

**NOTE**

- **On this machine, [Display] is specified by default for the life display.**
- **[Off] is specified by default for the life stop display, when the life stop is reached this machine does not stop and printing is possible.**
- **Check the life value of consumables and parts, and check the number of pages printed on this machine with setting [Service Mode] -> [Counter] -> [Life].**

#### (1) Counter life determination

- The life has been reached when the fusing unit print counter value has reached the life threshold value.

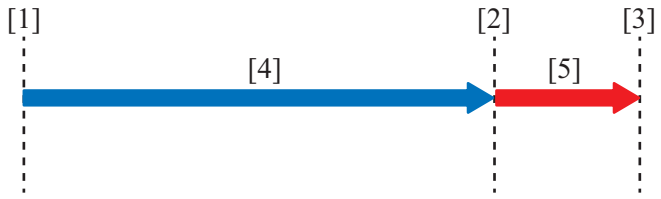


| | | | |
|---|---|---|---|
| [1] | New article (starts to be used) | [2] | Life display |
| [3] | Life stop display | [4] | Image guaranteed range |
| [5] | Outside image guaranteed range | - | - |

#### (2) Life detection

If the fusing unit print counter value reaches the threshold, the machine determines that the fusing unit has reached a new state.

##### (a) Life display setting

- On this machine, since the life display is specified to [Display] by default, a display appears when the life is reached.
- Configure the reaching life display settings as necessary. [Service Mode] -> [System 2] -> [Unit Change] -> [Near Life Display Settings]

##### (b) Life stop detection

- The life is stopped when the fusing unit print counter value has reached the life stop threshold value.

**Life stop detection**

- On this machine, since the life display and the life stop are specified to [Off] by default, a warning display does not appear and the print job does not stop even when the life is reached.
- Configure the life stop settings as necessary. [Service Mode] -> [Enhanced Security] -> [Life Stop Setting]

##### (c) Life stop display

- When it reached the life stop, and the life display is specified to [On] with the life stop display settings, the life warning appears and the print job is prohibited.




### 14.3.13 Fusing cooling control

- The machine is equipped with a toner cartridge cooling fan to equipped cooling to the toner cartridge area and the fusing section.
- The toner cartridge cooling fan sucks air from the rear side of the main body and pushes it in between the fusing unit and the toner cartridge/K.
- Creation of air flow between the fusing unit and toner cartridge may make the heat generates from the fusing unit hardly reach the toner cartridge area. This structure limits the increase in temperature of the toner cartridge area.

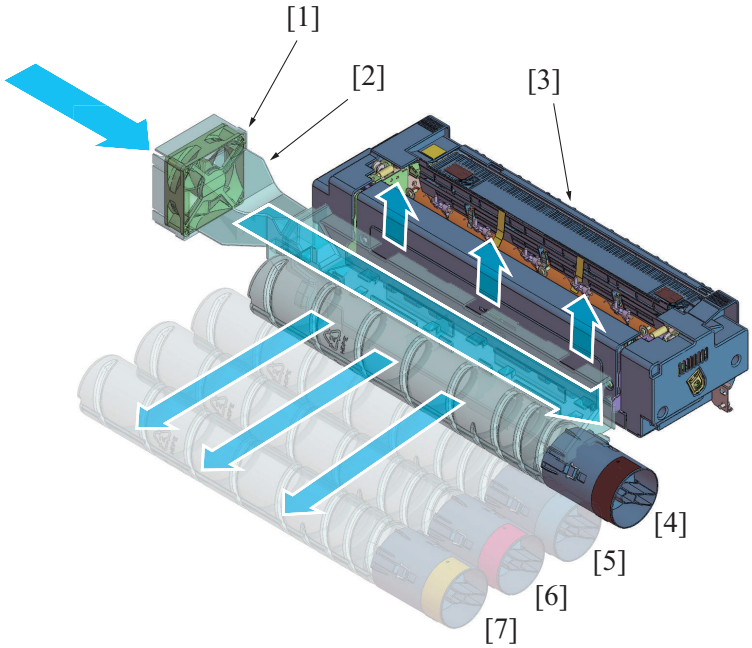


| | | | |
|---|---|---|---|
| [1] | Toner cartridge cooling fan (FM4) | [2] | Duct |
| [3] | Fusing unit | [4] | Toner cartridge/K |
| [5] | Toner cartridge/C | [6] | Toner cartridge/M |
| [7] | Toner cartridge/Y | - | - |

# 15. PAPER EXIT/REVERSE SECTION

## 15.1 Configuration

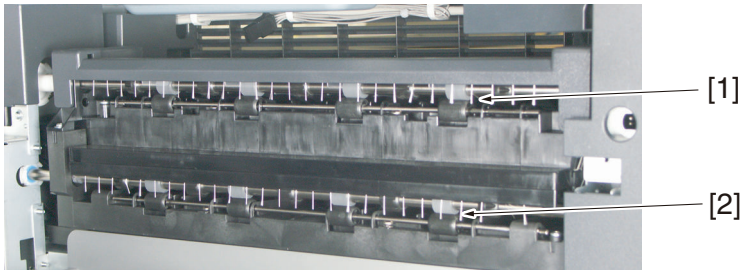


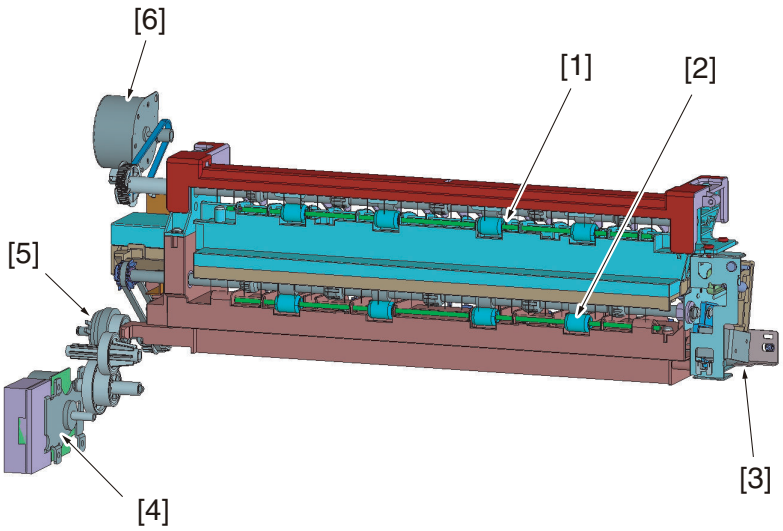


| | | | |
|---|---|---|---|
| [1] | Reverse roller | [2] | Paper exit roller |
| [3] | Gate switch solenoid (SD3) | [4] | Fusing motor (M3) |
| [5] | Paper exit clutch (CL8) | [6] | Reverse motor (M4) |

## 15.2 Drive

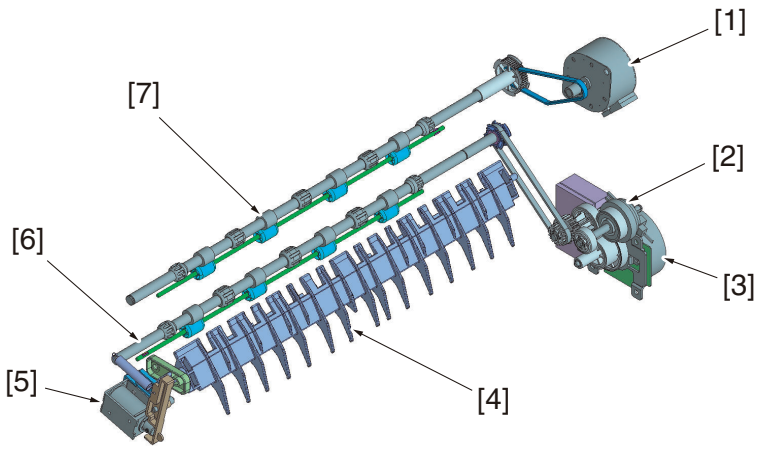


| | | | |
|---|---|---|---|
| [1] | Reverse motor (M4) | [2] | Paper exit clutch (CL8) |
| [3] | Fusing motor (M3) | [4] | Paper exit/reverse switch gate |
| [5] | Gate switch solenoid (SD3) | [6] | Paper exit roller |
| [7] | Reverse roller | - | - |

## 15.3 Operation

### 15.3.1 Transport control

#### (1) Paper exit by paper exit roller

- If the paper is fed out by way of the paper exit roller, the paper exit roller is rotated forward to transport the paper.
- The initial position of the paper exit/reverse switch gate establishes a paper path through the paper exit roller, so that its position is not changed.
- The paper exit roller is driven by controlling rotation of the fusing motor with the paper exit clutch.
- The paper exit clutch is energized at timing at which the leading edge of the paper enters the fusing unit.
- The paper exit clutch is deenergized when the paper is fed a predetermined distance after the paper exit roller after the paper exit sensor has detected the trailing edge of the paper.

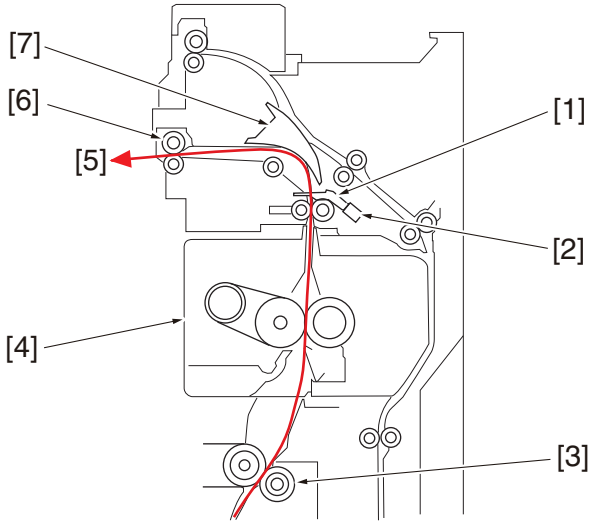


| | | | |
|---|---|---|---|
| [1] | Actuator | [2] | Paper exit sensor (PS3) |
| [3] | 2nd transfer roller | [4] | Fusing unit |
| [5] | Transported to paper exit tray or finisher | [6] | Paper exit roller |
| [7] | Paper exit/reverse switch gate: solenoid OFF position | - | - |

#### (2) Paper exit by reverse roller

- The paper is fed from the reverse roller to the paper exit tray, only if FS-534/JS-506 capable of feeding paper out through the reverse roller is mounted.
- When the paper is to be fed out via the reverse roller, the reverse motor is rotated forward to thereby transport the paper.
- The gate switch solenoid is energized in order to establish a paper path through the reverse roller by changing the position of the paper exit/reverse switch gate.
- The reverse roller is started at timing at which the leading edge of the paper enters the paper exit/reverse section.
- The reverse roller is stopped when the paper is fed a predetermined distance after the reverse roller after the paper exit sensor has detected the trailing edge of the paper.

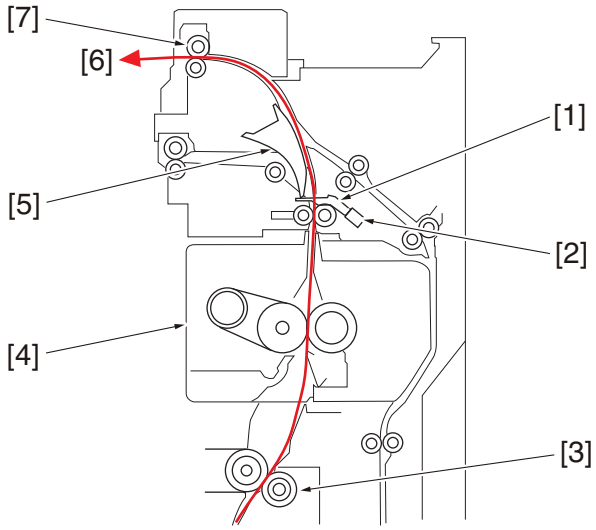


| | | | |
|---|---|---|---|
| [1] | Actuator | [2] | Paper exit sensor (PS3) |
| [3] | 2nd transfer roller | [4] | Fusing unit |
| [5] | Paper exit/reverse switch gate: solenoid ON position | [6] | Paper exit to paper exit tray |

| | | | |
|---|---|---|---|
| [7] | Reverse roller | - | - |

### (3) Duplex section transport

- When the paper is to be fed into the duplex section, the reverse roller is rotated forward to transport the paper to the reverse position and then rotated backward, thereby transporting the paper onto the duplex section.
- Until the paper is transported up to the reverse stop position, the gate switch solenoid is energized to place the paper exit/reverse switch gate in a position at which the paper path through the reverse roller is established.
- When the paper reaches the reverse stop position, the paper exit/reverse switch gate returns to its original position to thereby prevent the paper from moving backward into the fusing section.
- The reverse roller is started to rotate forward at timing at which the leading edge of the paper enters the paper exit/reverse section.
- The reverse roller is stopped from forward rotation at timing at which the paper reaches the reverse stop position after the paper exit sensor has detected the trailing edge of the paper.
- The reverse roller is started to rotate backward at timing at which the preceding paper moves past a predetermined position of the duplex section.
- The reverse roller is stopped from backward rotation at timing at which the trailing edge of the paper enters the duplex section.

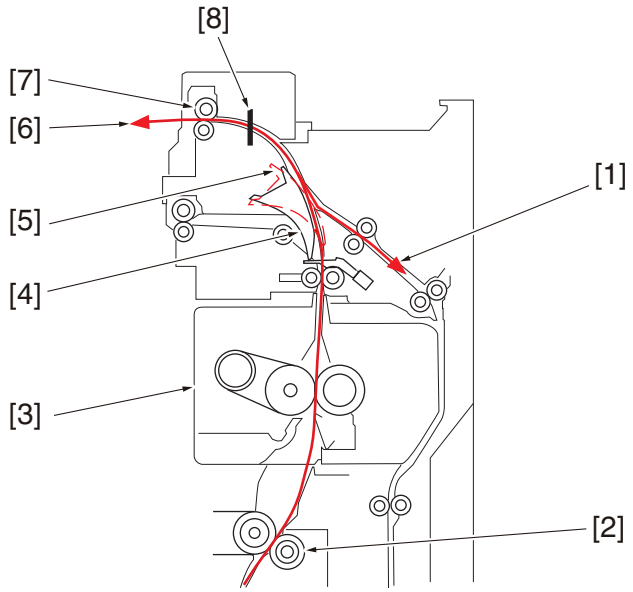


| | | | |
|---|---|---|---|
| [1] | Transporting to duplex section | [2] | 2nd transfer roller |
| [3] | Fusing unit | [4] | Paper exit/reverse switch gate: solenoid ON position |
| [5] | Paper exit/reverse switch gate: solenoid OFF position | [6] | Transporting to reverse stop position |
| [7] | Reverse roller | [8] | Reverse stop position |

## 15.3.2 Exit paper cooling mechanism

- The paper cooling fan cools the paper after fusing and the paper exit/reverse section.
- The paper cooling fan sucks the warm air from the area of the paper exit/reverse section and discharges it out of the machine.
- The exhaust air is discharged externally from the main body rear side and is exhausted downward from the exhaust cover.

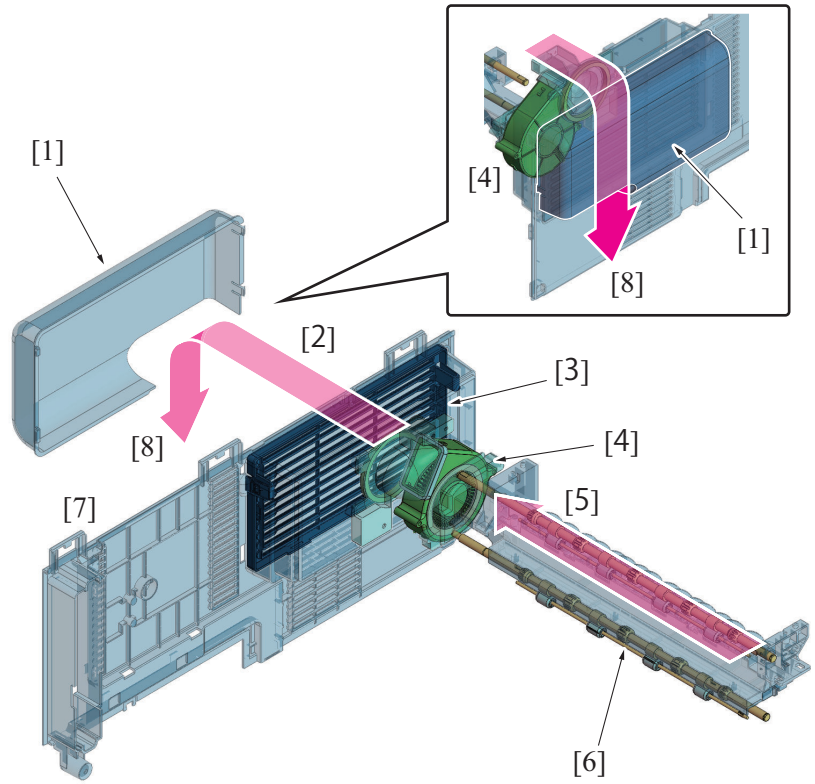


| | | | |
|---|---|---|---|
| [1] | Exhaust cover | [2] | Discharging exhaust air out of the machine |
| [3] | Filter cover | [4] | Paper cooling fan (FM8) |
| [5] | Sucking warm air from the paper exit/reverse section | [6] | Paper exit/reverse section |
| [7] | Upper rear cover | [8] | Deflection of air flow direction |

### 15.3.3 Air filtering system

- The paper cooling fan sucks ultrafine particles (UFPs) and odors that are generated from the fusing unit, and the main body rear side removes them.

**NOTE**

- **The UFP filter is fitted as standard equipment on models that are destined for Europe only.**
- **The deodorant filter is fitted as standard equipment on models that are destined for China only.**
- **The UFP and deodorant filters can be used together. When these filters are used together, the deodorant filter is mounted to the rear of the UFP filter.**

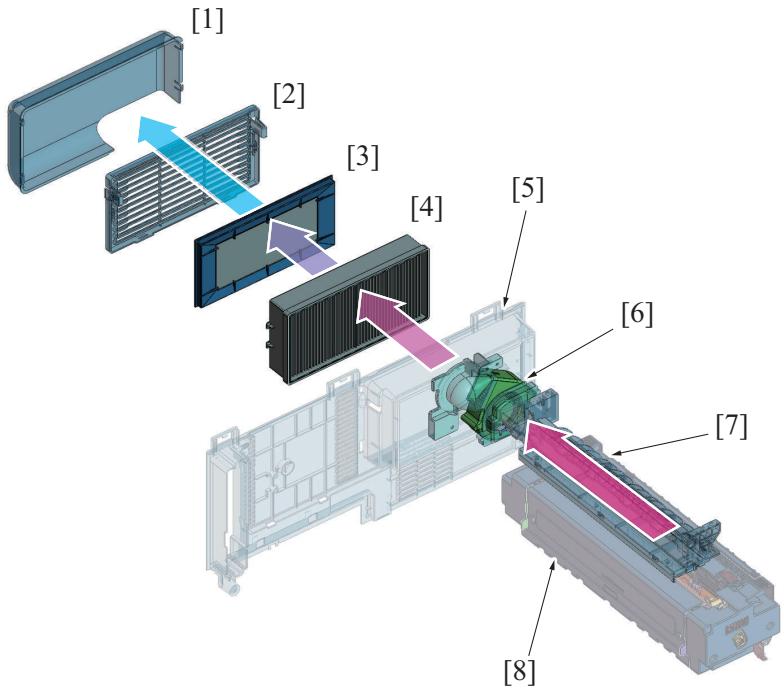


| | | | |
|---|---|---|---|
| [1] | Ventilation cover | [2] | Filter cover |
| [3] | Deodorant filter | [4] | UFP filter |
| [5] | Upper rear cover | [6] | Paper cooling fan (FM8) |

| | | | |
|---|---|---|---|
| [7] | Paper exit/reverse section | [8] | Fusing unit |

### (1) UFP removal function

- The UFP filter removes UFPs in the air.

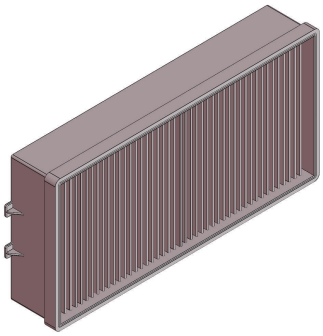

**NOTE**

- **The UFP filter does not requires a periodic replacement.**
- **A higher air cleaning performance can be achieved through installing the optional cleaning unit CU-101.**

### (2) Deodorization function

- The deodorant filter removes odors in the air.

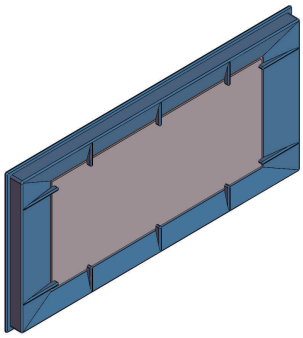

**NOTE**

- **The deodorant filter does not requires a periodical replacement.**

# 16. DUPLEX SECTION

## 16.1 Configuration

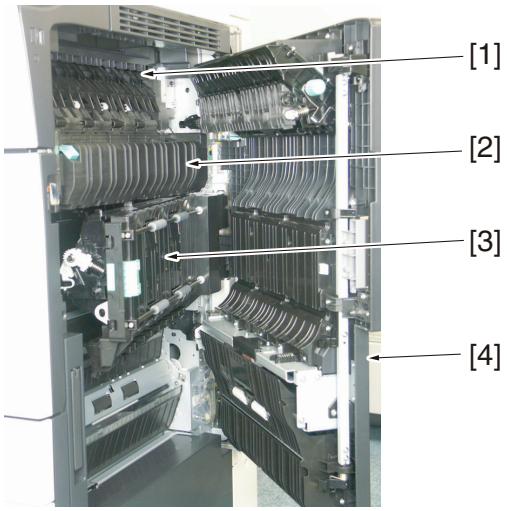


| | | | |
|---|---|---|---|
| [1] | Paper exit/reverse switch gate | [2] | Fusing unit |
| [3] | Registration unit (Duplex section) | [4] | Right door |

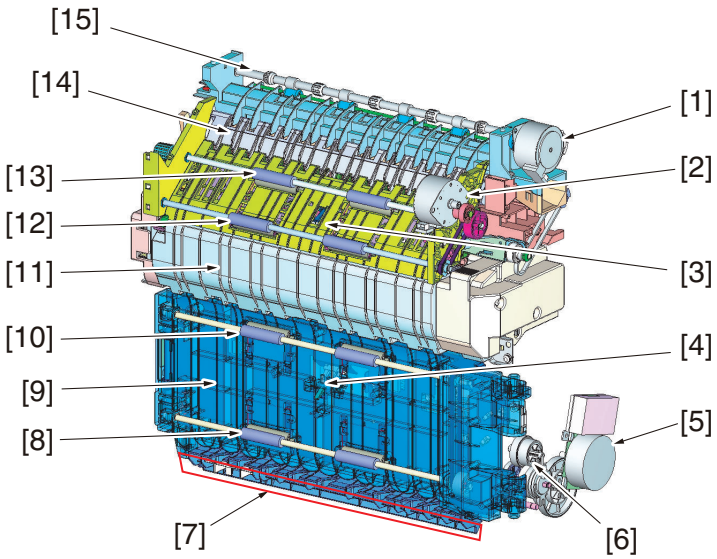


| | | | |
|---|---|---|---|
| [1] | Reverse motor (M4) | [2] | ADU transport motor (M5) |
| [3] | ADU paper passage sensor/1 (PS40) | [4] | ADU paper passage sensor/2 (PS41) |
| [5] | Transport motor (M1) | [6] | ADU transport clutch (CL6) |
| [7] | Duplex pre-registration section | [8] | ADU transport roller/4 |
| [9] | Registration unit (Duplex section) | [10] | ADU transport roller/3 |
| [11] | Fusing unit | [12] | ADU transport roller/2 |
| [13] | ADU transport roller/1 | [14] | Paper exit/reverse switch gate |
| [15] | Reverse roller | - | - |

## 16.2 Drive

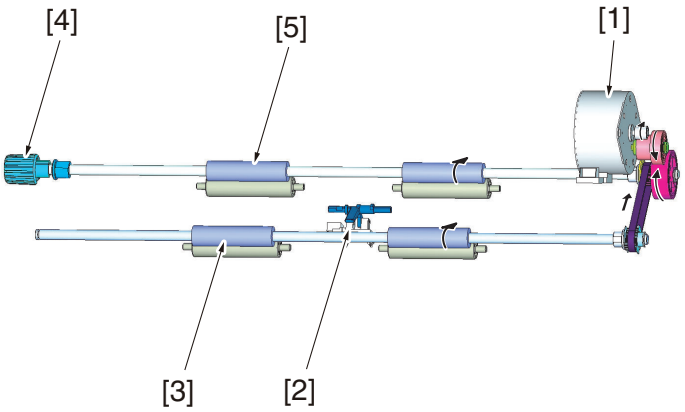


| | | | |
|---|---|---|---|
| [1] | ADU transport motor (M5) | [2] | ADU paper passage sensor/1 (PS40) |
| [3] | ADU transport roller/2 | [4] | Jam removal dial |
| [5] | ADU transport roller/1 | - | - |

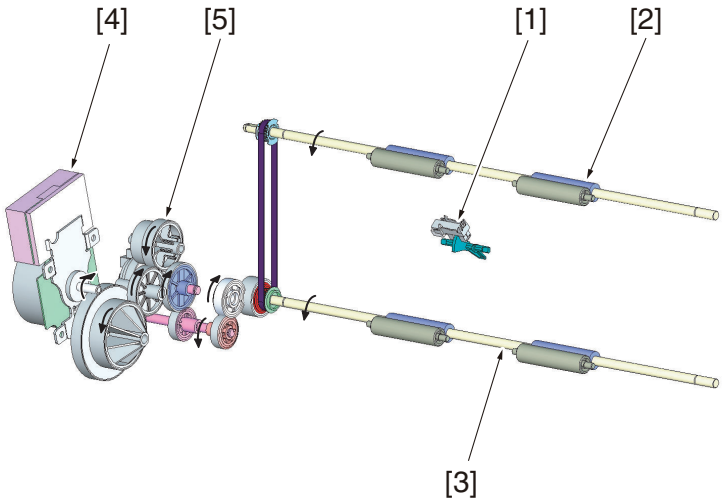


| | | | |
|---|---|---|---|
| [1] | ADU paper passage sensor/2 (PS41) | [2] | ADU transport roller/3 |
| [3] | ADU transport roller/4 | [4] | Transport motor (M1) |
| [5] | ADU transport clutch (CL6) | - | - |

## 16.3 Operation

### 16.3.1 Paper transport control

- In duplex transportation, the paper transported from the reverse roller is transported to the internal duplex section by the ADU transport roller/1 and ADU transport roller/2.
- In duplex pre-registration, the paper is conveyed to the registration roller at the vertical transport section by the ADU transport roller/3 and ADU transport roller/4.

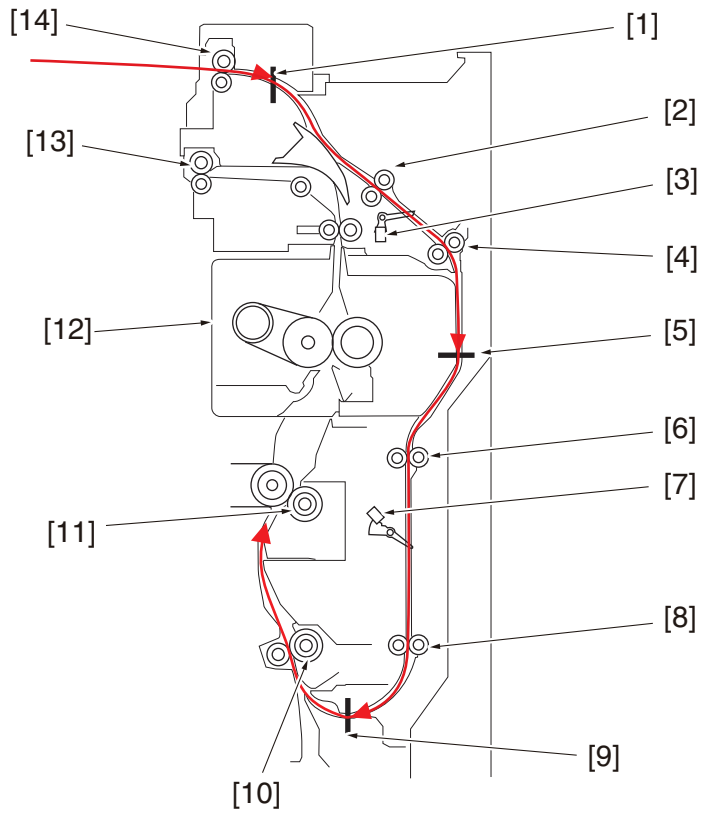


| | | | |
|---|---|---|---|
| [1] | Stop position 1 | [2] | ADU transport roller/1 |
| [3] | ADU paper passage sensor/1 (PS40) | [4] | ADU transport roller/2 |
| [5] | Stop position 2 | [6] | ADU transport roller/3 |
| [7] | ADU paper passage sensor/2 (PS41) | [8] | ADU transport roller/4 |
| [9] | Stop position 3 | [10] | Registration roller |
| [11] | 2nd transfer roller | [12] | Fusing unit |
| [13] | Paper exit roller | [14] | Reverse roller |

### (1) Transport roller control

- The ADU transport motor drives the ADU transport roller/1 and ADU transport roller/2.
- The ADU transport roller/3 and ADU transport roller/4 are driven by controlling rotation of the transport motor with the ADU transport clutch.

### (2) Paper entrance control

- The reverse motor at the paper exit/reverse section is deenergized to stop transport of the paper temporarily. (stop position 1)
  When the condition for starting reverse into the duplex section is met, the reverse motor rotates backward to transport the paper into the duplex section.
- At the same time of backward rotation of the reverse motor, the ADU transport motor is energized and the ADU transport roller/1 and ADU transport roller/2 start rotating.
- The ADU paper passage sensor/1 located downstream of the ADU transport roller/1 detects the leading edge of the paper transported to the duplex section.
- If a preceding sheet of paper being transported through the duplex section is yet to reach a predetermined position downstream of the registration roller, the ADU transport motor is deenergized to stop transport of the paper temporarily. (stop position 2)
- When the advanced sheet of paper moves past the specified position, the ADU transport motor is energized to resume the transport of paper.
- If the ADU paper passage sensor/2 does not detect the leading edge of the paper even after the lapse of a predetermined period of time after the ADU paper passage sensor/1 has detected the leading edge of the paper, the machine determines that a paper misfeed occurs at the duplex transport part.

### (3) Duplex paper feed control

- When the leading edge of the paper reaches the specified position, the ADU transport clutch is energized and the ADU transport roller/3 and ADU transport roller/4 start rotating.
- The ADU paper passage sensor/2 detects the leading edge of the paper transported from the ADU transport roller/3.
- When the paper moves past the ADU transport roller/4 and reaches the specified position, the ADU transport clutch is deenergized to stop the transport of the paper temporarily. (stop position 3)
  If, in this case, the paper has a length of more than 286.3 mm in the paper feeding direction, the ADU transport motor is also deenergized.
- At predetermined paper feed timing, the ADU transport clutch is energized to resume the transport of the paper.
  The ADU transport motor is also energized if it has been deenergized.
- The paper is fed from the ADU transport roller/4 onto the registration roller at the vertical transport part.

### 16.3.2 Duplex circulation control

- The duplex circulation control is performed differently according to the paper feeding direction length of the paper.

| Paper feeding direction paper length | Duplex circulation control |
|---|---|
| More than 458 mm | Can not print 2-sided |
| 433 mm to 458 mm | One-sheet circulation operation |
| 217 mm to 432 mm | Two-sheet circulation operation |
| 216 mm or less | Three-sheet circulation operation |

#### (1) One-sheet circulation operation

Operation 1

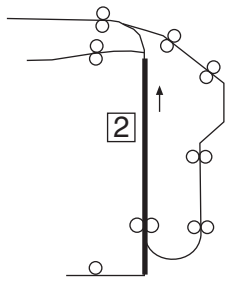


*1.* One sheet of paper is supplied and the image of the second page is printed.

Operation 2

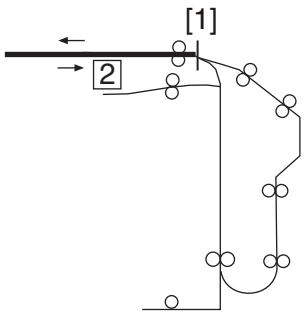


*2.* After the paper transported to the paper exit/reverse section stops at the stop position 1 [1] (reverse roller), the reverse roller turns around to send the sheet to the duplex section. (paper reversed)

Operation 3

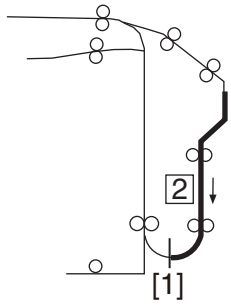


*3.* The paper transported to the duplex section is transported onto, and stopped at the stop position 3 [1] (ADU transport roller/4).

Operation 4

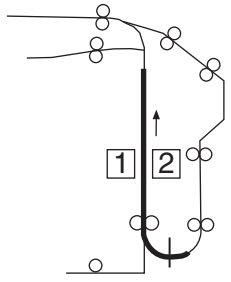


*4.* The image of the first page is printed on the paper re-supplied from the duplex section.

Operation 5

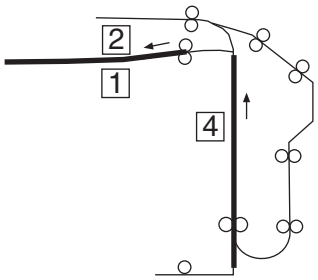


5. The first sheet of the paper is fed out.
   The image of fourth page is printed on the second sheet.
6. Steps 2 through 5 are repeated.

### (a) Operation timing

One A4-size original for 2-sided printing

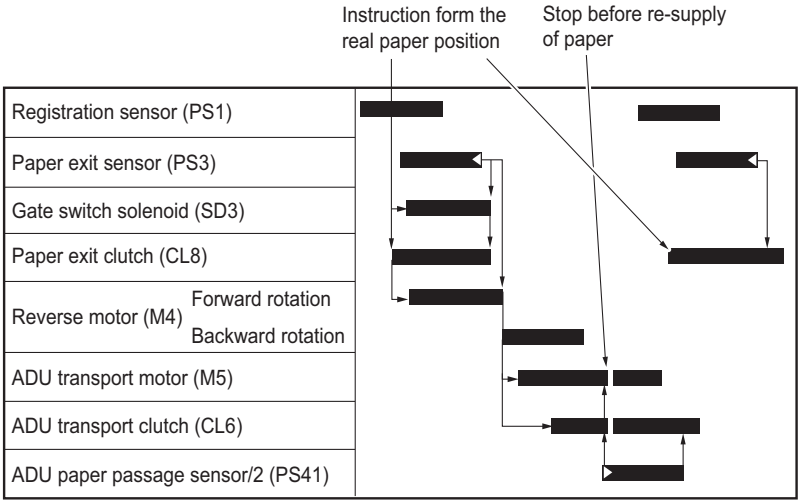


**NOTE**

- **Only the ADU transport clutch is energized, if the length of the paper to be taken up and fed into the duplex section is less than 291.8 mm.**

### (2) Two-sheet circulation operation

Operation 1

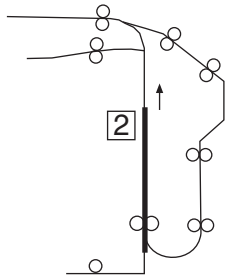


*1.* The first sheet of paper is supplied and the image of the second page is printed.

Operation 2

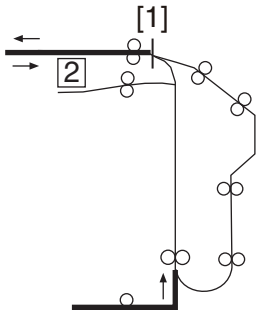


*2.* After the first sheet of paper stops at the stop position 1 [1], the reverse roller turns around to send the sheet to the duplex section. (paper reversed)
The second sheet of paper is supplied.

Operation 3

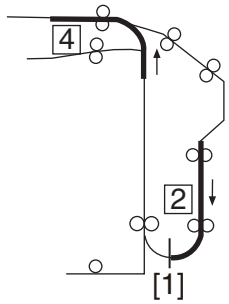


*3.* The first sheet of the paper is sent trough the duplex section and stops at the stop position 3 [1] (ADU transport roller/4).
The image of the fourth page is printed on the second sheet of paper.

Operation 4

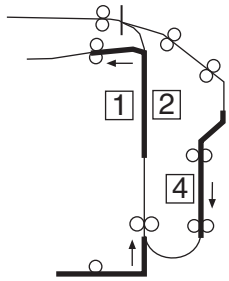


*4.* The first sheet of the paper is re-supplied and an image of the first page is printed on.
The second sheet of paper is reversed at the paper exit/reverse section and transported onto the duplex section.
The third sheet of paper is supplied.

Operation 5

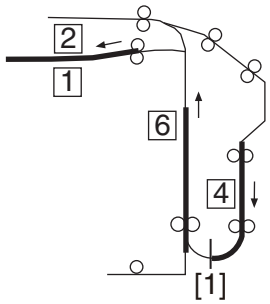


*5.* The first sheet of the paper is fed out.
The second sheet of paper is transported onto, and stopped at stop position 3 [1].
The image of the sixth page is printed on the third sheet of paper.

Operation 6

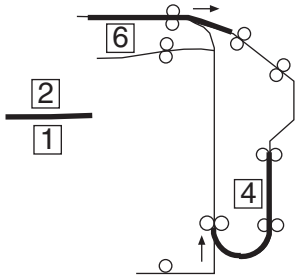


*6.* The second sheet of the paper is re-supplied.
The third sheet of paper is reversed at the paper exit/reverse section and transported onto the duplex section.

Operation 7

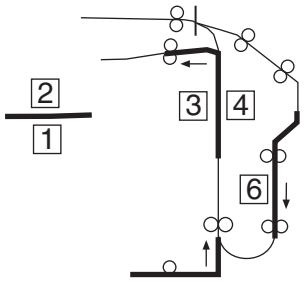


*7.* The image of the third page is printed on the second sheet of paper.
The third sheet of paper is transported in the duplex section.
The fourth sheet of paper is supplied.

Operation 8

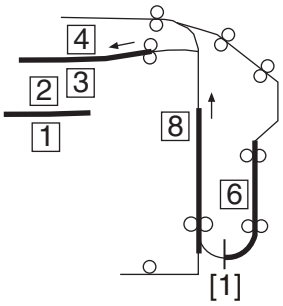


*8.* The second sheet of the paper is fed out.
The third sheet of the paper is stopped and waited at stop position 3 [1].
The image of eighth page is printed on the fourth sheet of the paper.
*9.* Steps 6 through 8 are repeated.

### (3) Three-sheet circulation operation

Operation 1

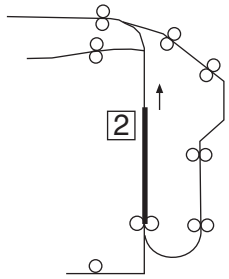


*1.* The first sheet of paper is supplied and the image of the second page is printed.

Operation 2

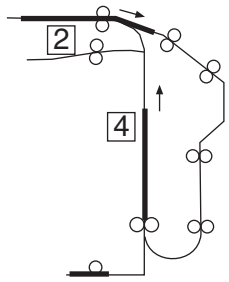


*2.* The first sheet of paper is reversed at the paper exit/reverse section and transported onto the duplex section.
The second sheet of paper is supplied and the image of the fourth page is printed.
The third sheet of paper is supplied.

Operation 3

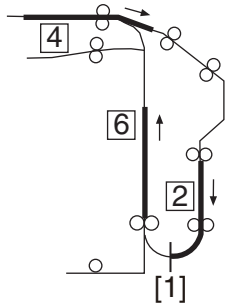


*3.* The first sheet of the paper is transported onto, and stopped at, stop position 3 [1].
The second sheet of paper is reversed at the paper exit/reverse section and transported onto the duplex section.
The image of the sixth page is printed on the third sheet of paper.

Operation 4

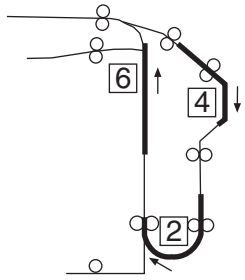


*4.* The first sheet of paper is transported onto the vertical transport section.
The second sheet of paper is transported into the duplex section.
The third sheet of paper is transported onto the paper exit/reverse section.

Operation 5

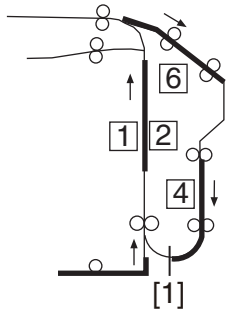


*5.* The image of the first page is printed on the first sheet of paper.
The second sheet of the paper is transported onto, and stopped at stop position 3 [1].
The third sheet of paper is reversed at the paper exit/reverse section and transported onto the duplex section.
The fourth sheet of paper is supplied.

Operation 6

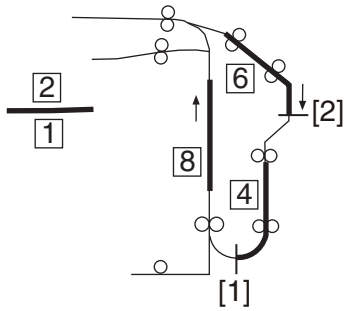


*6.* The first sheet of the paper is fed out.
The second sheet of paper waits at stop position 3 [1].
The third sheet of the paper is transported onto, and stopped at, stop position 2 [2] (ADU transport roller/2).
The image of eighth page is printed on the fourth sheet of the paper.

Operation 7

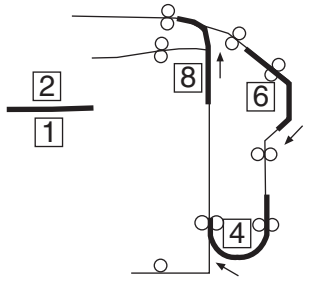


*7.* The second sheet of paper is transported onto the vertical transport section.
The third sheet of paper is transported into the duplex section.
The fourth sheet of paper is transported onto the paper exit/reverse section.

Operation 8

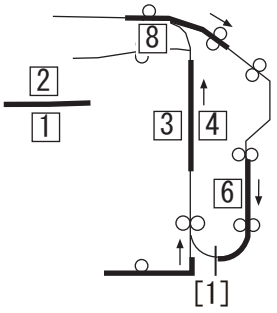


*8.* The image of the third page is printed on the second sheet of paper.
The third sheet of the paper is transported onto, and stopped at, stop position 3 [1].
The fourth sheet of paper is reversed at the paper exit/reverse section and transported onto the duplex section.
The fifth sheet of paper is supplied.

Operation 9

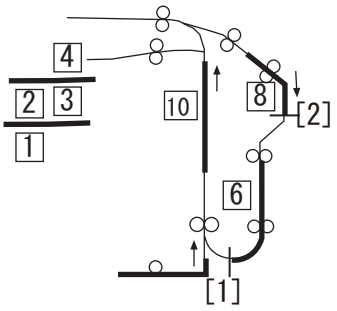


*9.* The second sheet of the paper is fed out.
The third sheet of paper waits at stop position 3 [1].
The fourth sheet of the paper is transported onto, and stopped at stop position 2 [2].
The image of the tenth page is printed on the fifth sheet of paper.

Operation 10

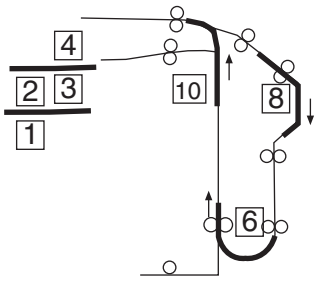


*10.* The third sheet of paper is transported onto the vertical transport section.
The fourth sheet of paper is transported onto the duplex section.
The fifth sheet of paper is transported onto the paper exit/reverse section.
*11.* Steps 8 through 10 are repeated.

# 17. IMAGE STABILIZATION CONTROL

## 17.1 Overview

- The machine provides the following image stabilization control to ensure stabilized copy image.

| Purpose | Control | Control means |
|---|---|---|
| • To stabilize image density<br>• To stabilize gradation | • IDC sensor adjustment control<br>• Max. density adjustment control<br>• LD intensity adjustment control<br>• Registration control (color shift correction)<br>• Gamma correction control | • IDC sensor<br>• Temperature/humidity sensor<br>• PH temperature sensor |
| To stabilize toner density | TCR control (Y, M, C, K) | TCR sensor |
| To stabilize image transfer | • Transfer output control<br>• Transfer ATVC | Temperature/humidity sensor |

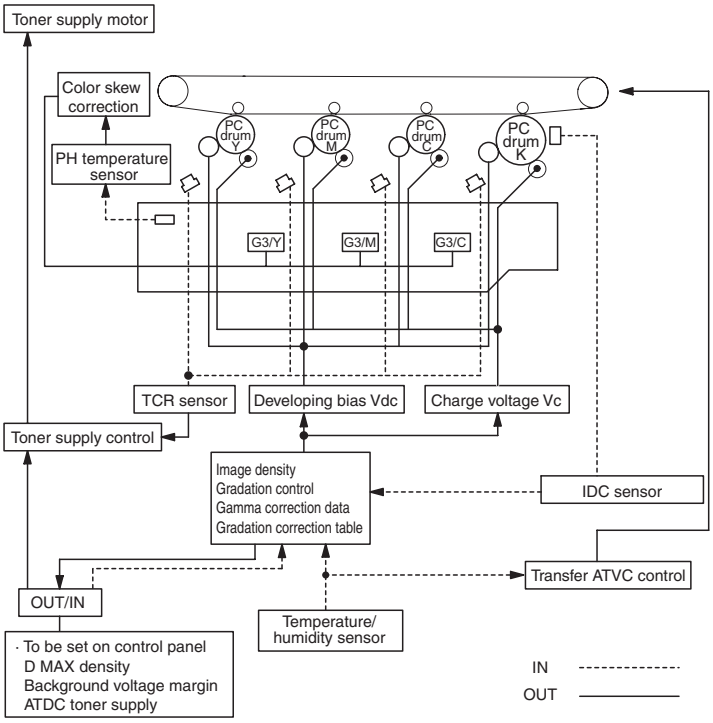


## 17.2 Description of control

### 17.2.1 IDC sensor adjustment control

- Controls changes in characteristics due to change with time and contamination of the transfer belt and IDC sensor, part-to-part variations in the sensors, and change of environment.
- The intensity (current value) of the IDC sensor is adjusted on the surface of the transfer belt, on which no toner sticks (background level).

### 17.2.2 Max. density adjustment control

- The developing bias (Vdc) is adjusted to control changes in the solid density resulting from variations in developing characteristics and IDC sensor intensity, variations in sensitivity of the photo conductor, and changes in the environment, durability, and the amount of charge in toner.
- Patterns are produced on the surface of the transfer belt and the IDC sensor detects the amount of toner sticking to them.
- Referring to the detected data and the environment data taken by the temperature/ humidity sensors, the developing bias value that results in the appropriate maximum density is calculated and stored in memory.
- Thereafter, the grid voltage (Vg) value, including the background margin adjustment value, is calculated and stored in memory.

### 17.2.3 LD intensity adjustment control

- It adjusts the variation in reproducibility of the thin line and the reverse outline, which is resulting from the variations in electrostatic characteristics of the photo conductor, developing characteristics and transfer characteristics in terms of individual difference, environment and durability, to make it the target level.
- It produces detection patterns on the surface of the transfer belt with the given level of LD intensity and detects the output value of IDC sensor.
- LD intensity is calculated from the detected IDC sensor data.

### 17.2.4 Color registration control (color shift correction)

- Color shift occurs on the tandem engine including image forming units for each color, due to the variations in internal parts and mounting accuracies. The color registration control system automatically detects color shift and correct color shift in the main and sub scanning directions.
- The color shift is detected as follows. A pattern is produced at each of front and rear ends of the transfer belt. The IDC sensors at the front and rear ends read respective patterns to thereby calculate and store color shift amounts in the sub scanning and main scanning directions.
- From data readings, the machine calculates how much the position of each of the different colors should be corrected. Based on the calculated data, the machine controls each dot during image output, thereby correcting the color shift amount.

### 17.2.5 Gamma correction control

- The gamma correction value is adjusted to correct changes in gamma characteristics to a linear one. The changes in gamma characteristics are caused with variations in the photo conductor sensitivity, developing characteristics, durability, environment, and parts variations in manufacturing.
- It produces gradation patterns on the transfer belt and calculates gradation characteristics output by the current engine with the IDC sensor.
- An optimum gamma correction value is determined for each color by calculating gamma correction data from the detected data of each of the colors of C, M, Y, and K.

## 17.3 Control contents

### 17.3.1 Image stabilization type (mode)

- Six different modes of image stabilization are available.
- A specific mode is selected according to the environmental conditions and print requirements, thereby achieving stabilized image at all times.

| Stabilization type | Contents |
|---|---|
| Mode 1 (initialization and image stabilization) | Executed when “Initialize + Image Stabilization” is selected from the control panel. |
| Mode 1 (long image stabilization) | Executed mainly when there is a change in environmental condition. |
| Mode 2 (short image stabilization) | Executed mainly after the main power switch is turned ON. |
| Mode 3 (gamma correction + color registration control) | Executed when the count of the number of printed pages during a print cycle reaches 400 and there is a change in machine interior temperature. |
| Mode 4 (color registration control) | Executed when there is a change in machine interior temperature. |
| Mode 5 (monochrome, long image stabilization) | Dedicated to monochrome and executed when there is a change in environmental condition. |
| Mode 6 (monochrome, short image stabilization) | Dedicated to monochrome and executed when the number of printed pages during a print cycle reaches 1000 or there is a change in machine interior temperature |

### 17.3.2 Control sequence by mode

- A different control sequence applies according to the mode of image stabilization.
- Control is performed in the specified sequence for each mode.

| Sequence | Mode 1 | Mode 2 | Mode 3 | Mode 4 | Mode 5 *4 | Mode 6 *4 |
|---|---|---|---|---|---|---|
| 1 | IDC sensor adjustment | IDC sensor detection *1 | IDC sensor detection *1 | IDC sensor detection *1 | IDC sensor detection | IDC sensor detection |
| 2 | Dmax density adjustment | Dmax density adjustment | Color registration adjustment *2 | Color registration adjustment *2 | Dmax density adjustment | Dmax density adjustment |
| 3 | LD light intensity adjustment | Color registration adjustment *2 | Gamma correction *3 | - | LD light intensity adjustment | - |
| 4 | Color registration adjustment | Gamma correction *3 | - | - | Gamma correction *3 | - |
| 5 | Dmax density adjustment | - | - | - | - | - |
| 6 | LD light intensity adjustment | - | - | - | - | - |
| 7 | Gamma correction | - | - | - | - | - |

- *1: The IDC sensor uses the output value calculated in the last IDC registration sensor adjustment and check that the value measured on the surface of the transfer belt (background level) is within the specified range. If the measured value is out of the specified range, mode 1 is used when the next image stabilization is carried out.
- *2: Unlike the color registration adjustment of mode 1, simplified color registration control is performed.
- *3: Unlike the gamma correction of mode 1, simplified gamma correction control is performed.
- *4: Monochrome-only mode

## 17.4 Operation timing

### 17.4.1 Predrive operation

- The following describe the stabilization operations executed when, for example, the main power switch is turned ON, the sleep mode is canceled, the front door is closed, or a malfunction is reset.

| Mode | Operation condition | Image stabilization setting |
|---|---|---|
| Mode 1 | • A new drum unit or a new developing unit is detected. | • Not specified |

| | | |
|---|---|---|
| | • A new transfer belt is detected.<br>• The machine recovers from a toner empty condition.<br>• While a warning code is being displayed. | |
| | • In the last image stabilization, the value of IDC sensor detection was out of the specified range.<br>• A change in environment is detected. (a change in environment exceeding the threshold value is detected since the last image stabilization sequence)<br>• The count of the number of printed pages is 10,000 as counted from the last LD adjustment.<br>• After skew adjustment reset (service mode). | • Standard or Color priority selection |
| Mode 2 | • A Dmax adjustment request is received as a result of the last gamma correction.<br>• The count of the number of printed pages after the gamma adjustment is 400 or more.<br>• Information is provided indicating that the last stabilization control was discontinued.<br>• There is a change in temperature after the lapse of a predetermined period of time after a developing drive stop. | • Standard or Color priority selection |
| | • The stabilization is executed when the main power switch is turned ON even without the operating condition | • Only Color priority selection |
| Mode 4 | • There is a change of a predetermined value or more in temperature after the color registration adjustment (when exiting from the sleep mode). | • Only Color priority selection |
| Mode 5 | • In the last image stabilization, the value of IDC sensor detection was out of the specified range.<br>• A change in environment is detected. (a change in environment exceeding the threshold value is detected since the last image stabilization sequence)<br>• The count of the number of printed pages is 10,000 as counted from the last LD adjustment.<br>• A predetermined period of time or more elapses after a developing drive stop. | • Only Black priority selection |
| Mode 6 | • A Dmax adjustment request is received as a result of the last gamma correction.<br>• The count of the number of printed pages after the gamma adjustment is 1000 or more.<br>• Information is provided indicating that the last stabilization control was discontinued. | • Only Black priority selection |

### (1) Stabilization mode setting

- Optimum image stabilization control can be selected using the administrator mode or service mode according to user's use condition.
- Three options available are the standard, color priority, and black priority modes.
- Mode of image stabilization setting is provided to maintain image quality and achieve the following purposes.
  1. To reduce frequency at which the stabilization control is performed in order to reduce cost per print for users who have a low print volume and low color ratio
  2. To shorten time between when the machine is turned ON and when it is ready for printing
  3. To maintain convenience for users having a high color frequency

| Mode | Control |
|---|---|
| Standard | • Color stabilization is executed if image adjustments are necessary for color print or black print during predrive. |
| Color priority | • Color stabilization is executed if image adjustments are necessary for color print or black print during predrive.<br>• Stabilization is executed unconditionally when the main power switch is turned ON. Warm-up time takes about 60 sec. when the main power switch is turned ON. |
| Black priority | • Black stabilization is executed if image adjustments are necessary for black print during predrive.<br>• Color stabilization is executed before color print if image adjustments are necessary for color print. |

## 17.4.2 During a print cycle

- When the stabilization execution condition is met during printing, a specific image stabilization mode according to the condition is selected and executed.

| Operating conditions | | | | | | Stabilization (mode) | Operation timing during print |
|---|---|---|---|---|---|---|---|
| Stabilization execution condition *1 | Dmax adjustment request based on last gamma correction result | Print count after gamma correction | Change of a predetermined value or more in temperature after last stabilization *2 | The number of pages yet to be printed of the current print job | Print count after last stabilization *3 | | |
| Any of the conditions is met | - | - | Change | A predetermined number of pages or more | - | Mode 1 is executed | Executed by interrupting the print cycle |

| | | | | | | | |
|---|---|---|---|---|---|---|---|
| | | | | Less than a predetermined number of pages | | | Executed after a print cycle |
| | | | | - | 800 to 1000 sheets or more | | Executed by interrupting the print cycle |
| | | | | - | 400 sheets or more | | Executed after a print cycle |
| None of the conditions is met | Yes | | Change | A predetermined number of pages or more | - | Mode 2 is executed | Executed by interrupting the print cycle |
| | | | | Less than a predetermined number of pages | | | Executed after a print cycle |
| | | | | - | 800 to 1000 sheets or more | | Executed by interrupting the print cycle |
| | | | | - | 400 sheets or more | | Executed after a print cycle |
| | No | 400 sheets or more | Change | A predetermined number of pages or more | - | Mode 3 is executed | Executed by interrupting the print cycle |
| | | | | Less than a predetermined number of pages | | | Executed after a print cycle |
| | | | | - | 800 to 1000 sheets or more | | Executed by interrupting the print cycle |
| | | | | - | 400 sheets or more | | Executed after a print cycle |
| | | 400 sheets or less | Change | A predetermined number of pages or more | - | Mode 4 is executed | Executed by interrupting the print cycle |
| | | | | Less than a predetermined number of pages | | | Executed after a print cycle |
| | Yes *4 | - | - | - | - | Mode 5 is executed | Executed by interrupting the print cycle |
| | - | 1000 sheets or more *5 | - | - | - | Mode 6 is executed | |

- *1: Stabilization execution condition:
  - In the last image stabilization, the value of IDC sensor detection was out of the specified range.
  - The last warning code occurs.
  - A change in environment is detected. (a change in environment exceeding the threshold value is detected since the last image stabilization sequence)
  - The count of the number of printed pages is 10,000 as counted from the last LD adjustment.
- *2: Detected by both the PH temperature sensor and temperature/humidity sensor
- *3: Counting method of printed pages

| Paper length in the paper feeding direction | Count | |
|---|---|---|
| | Color mode | Monochrome mode |
| 216 mm or less | 2 | 1 |
| Over 216 mm | 4 | 2 |

- *4: Dmax adjustment request during monochrome printing
- *5: Monochrome print count value

### 17.4.3 Service Mode

- Types (modes) of image stabilization to be executed with the menu of the service mode will be described.

| | |
|---|---|
| Menu of service mode | Gradation Adjust (Service Mode -> Imaging Process Adjustment -> Gradation Adjust) |
| Type (mode) of image stabilization to be executed | Mode 2 |

| | |
|---|---|
| Menu of service mode | Stabilizer (Service Mode -> Imaging Process Adjustment -> Stabilizer) |

| | | |
|---|---|---|
| Type (mode) of image stabilization to be executed | Initialize+Image Stabilization | Mode 1 |
| | Stabilization Only | Mode 2 |

### 17.4.4 Expert Adjustment

- Types (modes) of image stabilization to be executed with the menu of the expert mode will be described.

#### (1) Gradation Adjustment ([Utility] -> [Administrator Settings] -> [System Settings] -> [Expert Adjustment] -> [Gradation Adjustment])

| | |
|---|---|
| Type (mode) of image stabilization to be executed | Mode 2 |

#### (2) Image Stabilization ([Utility] -> [Administrator Settings] -> [System Settings] -> [Expert Adjustment] -> [Image Stabilization])

| | | |
|---|---|---|
| Type (mode) of image stabilization to be executed | Initialize+Image Stabilization | Mode 1 |
| | Stabilization Only | Mode 2 |

### 17.4.5 Stabilization time

| Type | | Time |
|---|---|---|
| Mode 1 | bizhub C368 | Approx. 35 sec. |
| | bizhub C308/C258 | Approx. 39 sec. |
| Other than the above | | Approx. 20 sec. or less |

# 18. IMAGE PROCESSING

## 18.1 Scanner section image processing block diagram

### 18.1.1 Image processing block diagram

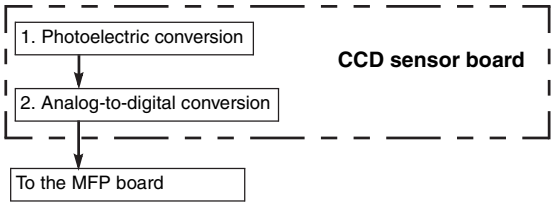


### 18.1.2 Detail

- The following detail the image processing operations performed by the scanner section.
  1. A reduction type CCD sensor is used to read the light reflected off the original and convert the optical data to a corresponding electric signal. To make data processing faster, data transfer and output are done through two channels, one for even-numbered pixels and the other for odd-numbered pixels.
  2. The odd and even analog signals output from the CCD sensor chips are synthesized to form a single string of signal data which is in turn converted to 10-bit digital signals (1024 gradation levels).
- The image data is transmitted to MFP board on the write section through the interface cable.

## 18.2 Write section image processing block diagram

### 18.2.1 Image processing block diagram

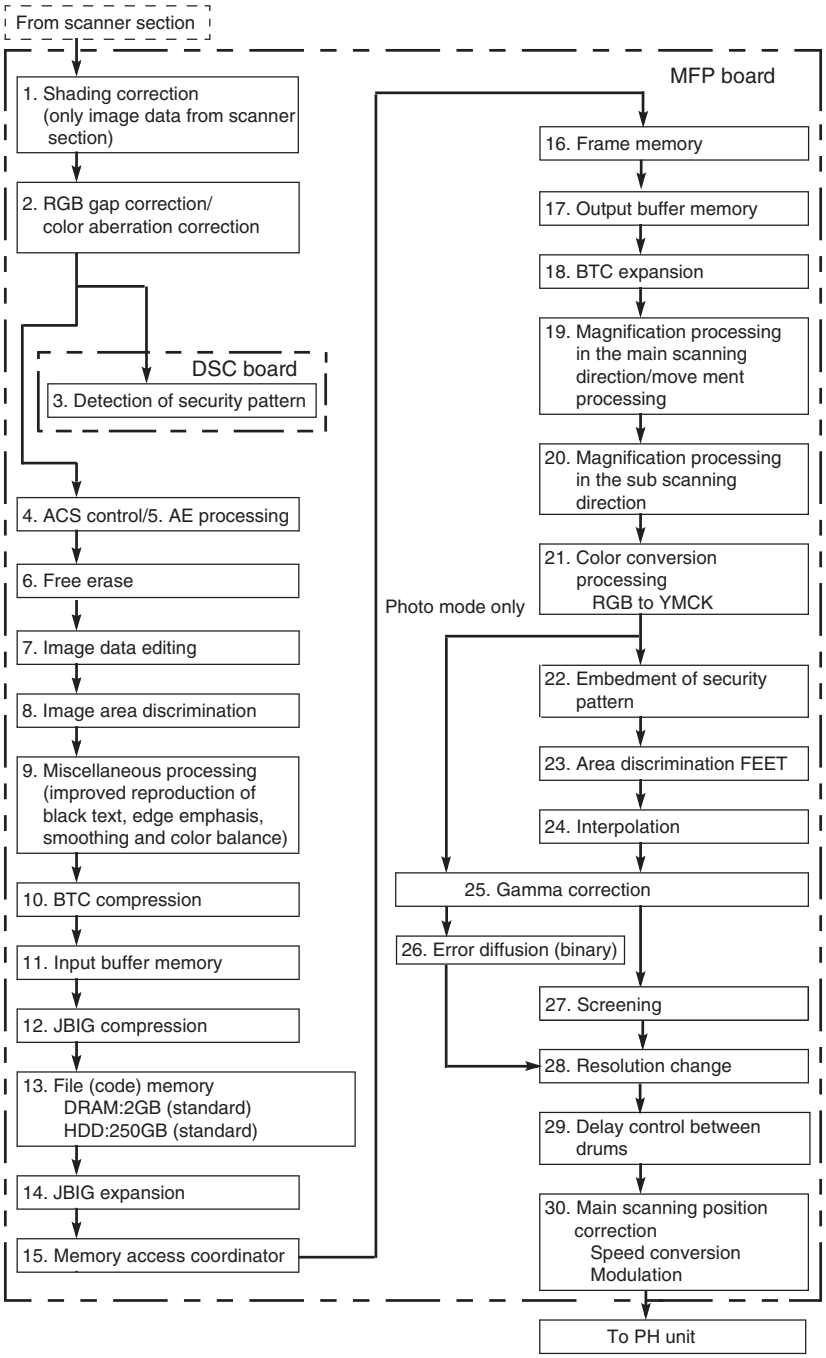

### 18.2.2 Detail

- The following detail the image processing operations performed by MFP board on the Write section.
  1. Correct variations in reading caused by pixel-to-pixel variations in sensitivity of the CCD sensor and uneven light distribution by the exposure LED. A peak-hold-type shading correction is performed, in which the maximum value of two or more readings of two or more lines is taken to prevent effect due to dust or dirt on the shading sheet. (only image data from scanner section)
  2. To correct differences in the position of each chip of CCD sensors R, G, and B, FIFO memory is adopted to match the output timing. Also correct color aberration of the lens.
  3. The security pattern created during printing on this machine is detected and copying is enabled or disabled through a password. (when the security kit SC-508 is mounted)
  4. The scanning area is divided into multiple blocks. The ratio of color or monochrome is calculated for each of these blocks. The machine then determines whether the entire original is colored or monochrome.
  5. A histogram of lightness for AE processing is generated. The AE level of the document is determined based on this histogram and AE processing is performed.
  6. If outer document elimination is selected from the control panel, document area determination processing is performed for each line within the document area data acquired during prescan. Then, the START and END positions of the document area in the main scanning direction are detected and the area outside the START and END positions is erased as the outside-the-document area.
  7. R, G, and B data are then converted to value and color component data for adjustments of saturation, lightness, and hue.
  8. Each image area, whether it is a color edge area, black edge area, dot area, or a continuous gradation area, is discriminated.
  9. Other types of processing performed are the improved reproduction of black text, edge emphasis, smoothing and color balance.
  10. Each image data of R, G, and B is compressed to reduce the consumption of data capacity.
  11. Temporarily stores the BTC-compressed image data.
  12. The stored image data is compressed in the JBIG (Joint bi-level image experts group) format.
  13. Each image data of R, G, and B in the copy, print, scan, and fax mode is stored. In PS printing, multi-valued data of Y, M, C, and K is stored.
  14. The image data read from the file memory is uncompressed through a method in a reverse way of JBIG compression. At this time, image rotating or sorting processing is conducted.
  15. JBIG image data are expanded in the frame memory.
  16. Each image data of R, G, and B is stored in frame memory.
  17. Temporarily stores the image data output from the frame memory.
  18. The image data is expanded through a method opposite to that used in the BTC compression.
  19. FIFO memory is used to enlarge or reduce images in the main scanning direction. The image is enlarged by increasing the number of data readings and reduced by decreasing the number of data readings.
  20. Reduction processing is conducted in sub scanning direction. No processing is done at same size or zoom, but at reduction, the lines are thinned out.
  21. The R, G, and B data is converted to the Y, M, C, and K density data. Also, the masking processing, which compensates for the deviation in the spectral reflection characteristics of the toner, and UCR/BP processing are performed on the image data.
  22. The security pattern is embedded in the image data. Either enabling copying through a password or unconditionally prohibiting copying can be selected from the control panel for the security pattern to be embedded. (when the security kit SC-508 is mounted)
  23. Edge of letter and lineal drawing gets area discrimination and FEET processing is conducted according to the discrimination result.
  24. When FEET processing is conducted, interpolation is done so that no influence is given to continuous gradation portion.
  25. Makes the necessary corrections so that the printed gradations have linear characteristics, since the image density of the input image data is not directly proportional to that of the printed image because of the changing developing and photo conductor characteristics.
  26. In photo mode during copying and PC print, the image is processed as multi-valued data (8-bit data). In any mode other than photo, the error diffusion method is employed to process the image as binary (1-bit) data.
  27. Creates the density distribution of a predetermined pattern to enable outstanding gradation reproduction.
  28. For 1200 dpi writing, the 600 dpi image data is converted to corresponding 1200 dpi image data.
  29. Image data of the file memory is developed to the frame memory and output delay control for the interval of photo conductors, Y, M, C, K is conducted.
  30. Correct the shear in printing start position in the main scanning direction, which occurs when each PH unit of Y, M, C, K is exposed on the photo conductor. Adjust the processing speed in the board (main scanning) to conform to the input processing speed.

# 19. POWER SUPPLY SECTION

## 19.1 Main power switch

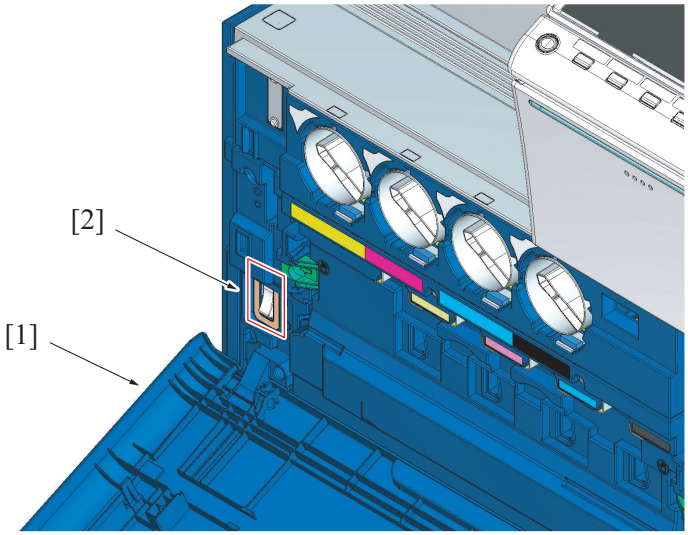


| | | | |
|---|---|---|---|
| [1] | Front door (open position) | [2] | Main power switch |

**NOTE**

- **To turn OFF and ON the main power switch, first turn OFF the main power switch and wait for 10 sec. or more before turning it ON again. If a setting value or values in the service mode are changed, it takes 10 sec. or more to incorporate the setting changes properly in the machine.**

## 19.2 Power key

### 19.2.1 Configuration

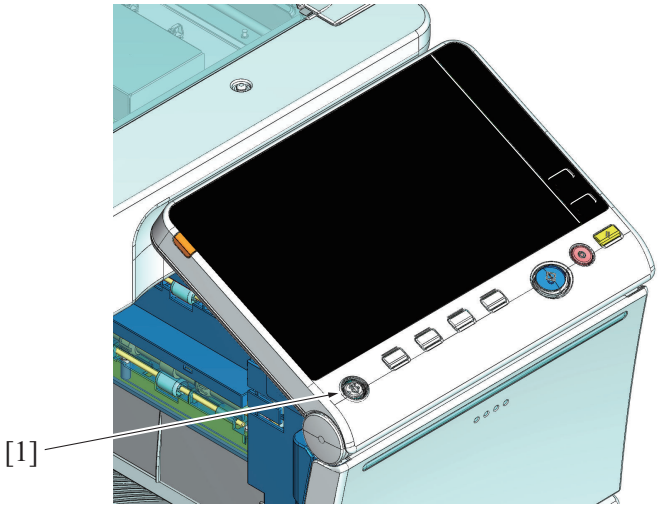


| | | | |
|---|---|---|---|
| [1] | Power key | - | - |

### 19.2.2 Operation

#### (1) Power key functions

- The power key offers two functions, serving as the power save button and the sub-power switch found in conventional models, depending on how long it is held down.
- From the [Utility / Administrator Settings / System Settings / Power Supply/Power Save Settings], you can perform the following operations.

##### (a) Europe

| How long the power key is held down | Default setting | Settings changed by Administrator Settings |
|---|---|---|
| Short time | Sub power OFF mode | Power save mode *1 (Low power mode *2) |
| | | Power save mode *1 (Sleep mode *2) |
| Long time | ErP auto power off mode | Sub power off mode *1 |

- *1: Utility / Administrator Settings / System Settings / Power Supply/Power Save Settings / Power Key Setting
- *2: Utility / Administrator Settings / System Settings / Power Supply/Power Save Settings / Power Save Settings

### (b) North America

| How long the power key is held down | Default setting | Settings changed by Administrator Settings |
|---|---|---|
| Short time | Power save mode (Low power mode *2) | Power save mode *1 (Sleep mode *2) |
| | | Sub power OFF mode *1 |
| Long time | Sub power off mode | ErP auto power off mode *1 |

- *1: Utility / Administrator Settings / System Settings / Power Supply/Power Save Settings / Power Key Setting
- *2: Utility / Administrator Settings / System Settings / Power Supply/Power Save Settings / Power Save Settings

### (2) Status in each mode

| Mode | | Condition | Power key LED | Power consumption |
|---|---|---|---|---|
| Standby | | All functions are ready to accept and ready to perform jobs. | Lit up blue | 126 W or less |
| Power save mode | Low power mode | • Power consumption is limited to a level lower than the standby state with the fusing temperature control minimized.<br>• Reset when a job is received or the machine is operated. | Blinking in blue | 100 W or less |
| | Sleep mode | • Power is supplied only to a portion of the MFP board required for receiving a job.<br>• Reset when a job is received or the machine is operated. | Blinking in blue | Typ 0.5 W *2 |
| Sub power off mode | | • Power is supplied only to the MFP board.<br>• A job can be received, but printing is performed when power is turned ON. | Lit up orange | Typ 0.5 W |
| ErP auto power off mode | | • Power consumption to the lowest level.<br>• Rset only by the power key or the weekly timer setting.<br>• No jobs can be received. *1 | Blinking in orange | Typ 0.5 W |

- *1: In ErP auto power OFF mode, this machine cannot receive data or faxes, and also it cannot scan or print an original.
- *2: When the following is selected: [Utility] -> [Administrator Settings] -> [System Settings] -> [Power Consumption in Sleep Mode] -> [High].

### (3) Power supply

Power is supplied only to the following portions in the sleep mode and the sub power OFF mode.

| | |
|---|---|
| 5.1V | • MFP controller<br>• FAX CPU<br>• HDD<br>• USB board |
| | • Angle sensor *<br>• Original cover sensor *<br>• Control panel key |

- *: No power is supplied when the following is selected: [Utility] -> [Administrator Settings] -> [System Settings] -> [Power Consumption in Sleep Mode] -> [High].

## 19.3 Power cables

### 19.3.1 Configuration

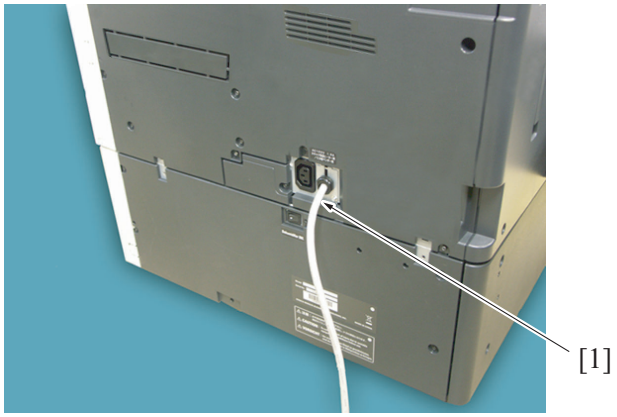


| | | | |
|---|---|---|---|
| [1] | Power supply: 15A/ 12A/ 8A | - | - |

### 19.3.2 Operation

- The main body uses a single outlet.

# 20. FAN CONTROL

## 20.1 Configuration

### 20.1.1 Front view

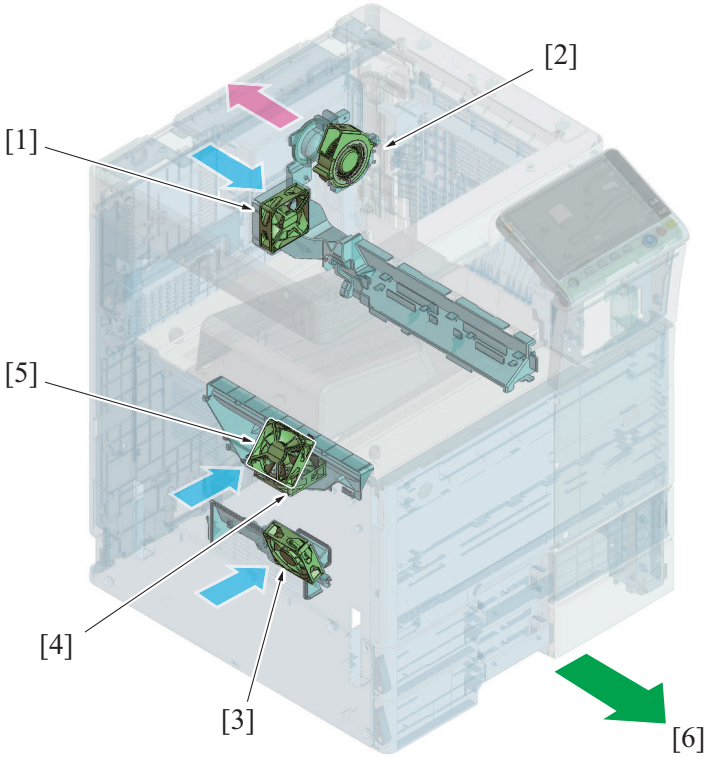


| | | | |
|---|---|---|---|
| [1] | Toner cartridge cooling fan (FM4) | [2] | Paper cooling fan (FM8) |
| [3] | Power supply cooling fan (FM1) | [4] | Rear side cooling fan (FM3) |
| [5] | Transfer belt cleaner cooling fan (FM2) | [6] | Front of main body |

### 20.1.2 Rear view

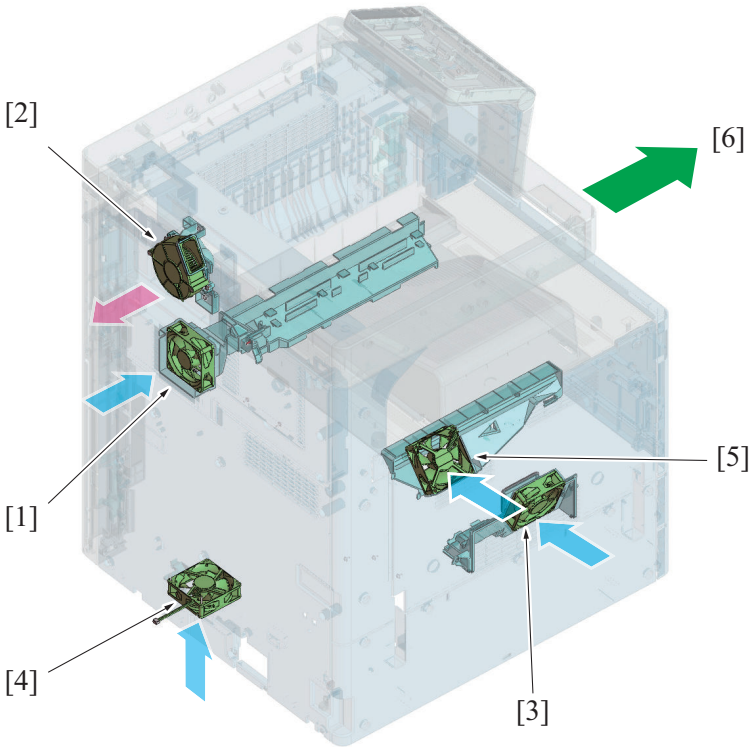


| | | | |
|---|---|---|---|
| [1] | Toner cartridge cooling fan (FM4) | [2] | Paper cooling fan (FM8) |
| [3] | Power supply cooling fan (FM1) | [4] | Rear side cooling fan (FM3) |
| [5] | Transfer belt cleaner cooling fan (FM2) | [6] | Front of main body |

## 20.2 Function

| Motor name | Function |
|---|---|
| Power supply cooling fan (FM1) | • Draws outside air into the inside of the machine to prevent the temperature around the DC power supply, PH section, developing/drum unit. |
| Transfer belt cleaner cooling fan (FM2) | • Draws air from the drum unit and developing unit area to prevent the temperature of the process section and transfer cleaner section from rising. |
| Rear side cooling fan (FM3) | • Blows outside air against around the MFP board, HV board and drive unit to prevent the temperature of the board from rising. |
| Toner cartridge cooling fan (FM4) | • Draws outside air into the inside of the machine to prevent the temperature of the toner cartridge from rising. |
| Paper cooling fan (FM8) | • When the paper with toner heated at fusing section exit while still at high temperature, toner may be transferred to other paper on the exit tray. To prevent the toner adhesion (tacking), the internal residual heat is discharged outside of the unit.<br>• To prevent the temperature from rising inside the fusion unit, the internal residual heat is discharged outside of the unit.<br>• Ultrafine particles (UFPs) in the air are sucked and removed through the UFP filter.<br>• Odors in the air are sucked and removed through the deodorant filter. |

## 20.3 Control

| Motor name | Control | Control conditions (outline) |
|---|---|---|
| Power supply cooling fan (FM1) | Stop | • At paper-jam, in trouble, or when the door is open<br>• When updating the firmware<br>• In standby *2<br>• In low-power or sleep |
| | Full speed | • At warm-up<br>• At initial operation, image stabilization, transfer cleaning, function *1<br>• When printing |
| Transfer belt cleaner cooling fan (FM2) | Stop | • Other than those below |
| | Full speed | • At warm-up<br>• At initial operation, image stabilization, transfer cleaning, function *1<br>• When printing |
| Rear side cooling fan (FM3) | Stop | • Other than those below |
| | 30% air flow relative to that of full speed | • At paper-jam, in trouble<br>• At warm-up<br>• In low-power<br>• In standby |
| | Full speed | • When printing<br>• At initial operation, image stabilization, transfer cleaning, function *1 |
| Toner cartridge cooling fan (FM4) | Stop | • Other than those below |
| | Full speed | • When printing<br>• At initial operation, image stabilization, transfer cleaning, function *1 |
| Paper cooling fan (FM8) | Stop | • When printing and warm-up except *4 |
| | Full speed | • At warm-up *4<br>• When printing |

- *1: Some operations selected in the service mode (Paper path check etc.)
- *2: If the machine enters the “standby” state, the fan motor turns at full speed for predetermined time before stopping.
- *3: Half speed rotation after the lapse of the predetermined period of time of full speed rotation
- *4: Full speed rotation when optional CU-101 is mounted, even during warm-up.

# 21. COUNTER CONTROL

## 21.1 Configuration

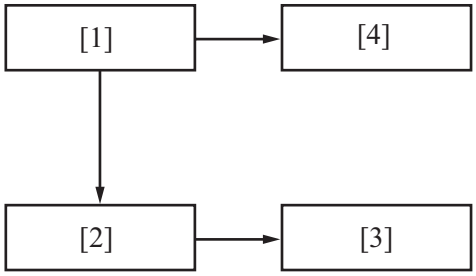


| | | | |
|---|---|---|---|
| [1] | MFP board (mechanical control area) (MFPB) | [2] | MFP board (controller area) (MFPB) |
| [3] | Electronic counter | [4] | Key counter (option) |

## 21.2 Operation

| Name | Function/system |
|---|---|
| Electronic counter | • Number of total in copy/print/fax/scan mode will be displayed on the screen as described below.<br>• Black, full color, mono color, and 2 color<br>• Total counter, large size counter, color total (copy + printer), scan counter, fax TX counter, fax RX counter, No. of originals counter, No. of prints counter, total duplex counter<br>• Counts one when an exit signal is applied to it |
| Key counter (option) | • When charging prints by using the key counter, copies cannot be made with out the key counter. However PC prints and fax TX/RX service are available without the key counter.<br>• Displays the cumulative number of copies while the key counter is being mounted.<br>• A mechanical counter driven by an electric signal<br>• Counts one when a paper feed start signal or image forming start signal, whichever occurs earlier, is applied to it |

**NOTE**

- **The counting modes can be selected at [Billing Setting] of Service Mode. For details, see "I.8.3.1 Counter Setting".**

# 22. INDICATOR FUNCTION

## 22.1 Configuration

### 22.1.1 Control panel section




| | | | |
|---|---|---|---|
| [1] | Start key indicator section | [2] | Power key indicator section |
| [3] | Warning status indicator section | - | - |

### 22.1.2 Front side section

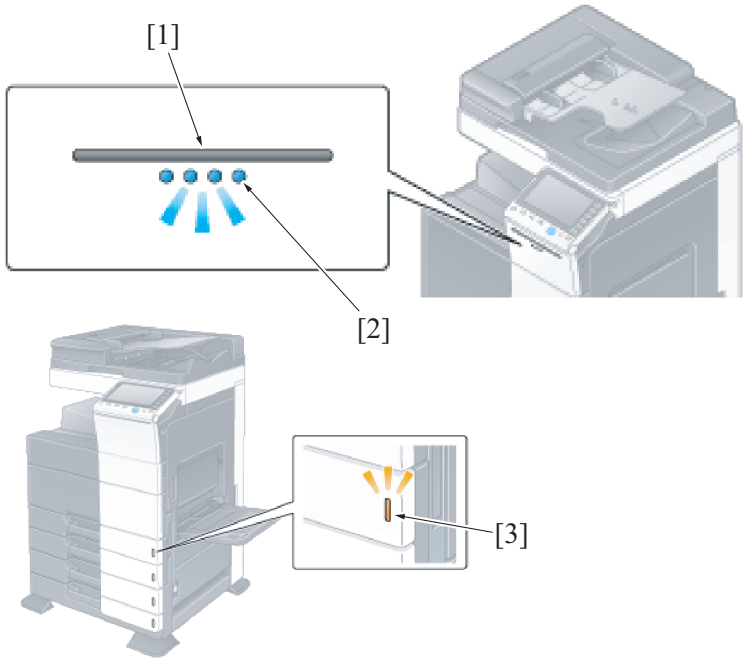


| | | | |
|---|---|---|---|
| [1] | Operation status indicator section | [2] | Data indicator section |
| [3] | Remaining paper level display section | - | - |

## 22.2 Control

- The lighting control for the LED on each indicator section is described below.

### 22.2.1 Power key and Start key indicator section

| | LED indicator | |
|---|---|---|
| During warm-up | Lit up blue | Lit up orange |

| | | |
|---|---|---|
| |  |  |
| During stand-by | Lit up blue | Lit up blue |
| |  |  |
| During copying or printing | Lit up blue | Lit up blue or orange |
| |  |  |
| Paper misfeed or trouble | Lit up blue | Lit up orange |
| |  |  |
| Low power mode<br>Sleep mode | Blinking in blue | Unlit |
| |  |  |
| ErP auto power off mode | Blinking in orange | Unlit |
| |  |  |
| Sub power off mode | Lit up orange | Unlit |
| |  |  |

### 22.2.2 Warning status indicator section

| | LED indicator |
|---|---|
| When machine stops | Lit up orange |

| | |
|---|---|
| |  |
| When warning occurs | Blinking in orange |
| |  |
| Other status | Unlit |
| |  |

### 22.2.3 Operation status indicator section

| | LED indicator |
|---|---|
| During copying or printing | Steady light and blinking light are repeated |
| |  |
| Other than the above | Unlit |
| |  |

### 22.2.4 Data indicator section

| | LED indicator |
|---|---|
| Job is currently | Lit up blue |
| |  |
| Receiving a job | Blinking in blue |
| |  |

| | |
|---|---|
| Other status | Unlit |
| |  |

### 22.2.5 Remaining paper level display section

| | LED indicator |
|---|---|
| Paper empty | Lit up orange |
| |  |
| Paper Near Empty | Blinking in orange or unlit * |
| |  |
| Other status<br>(During lift up, including open cassette) | Unlit |
| |  |

*: The lighting status varies depending on the following settings. [Service Mode] -> [System 1] -> [Machine State LED Setting]. Type 1: Blinks in orange, Type 2: Unlit

# PA THEORY OF OPERATION DF-629

## 1. CONFIGURATION

### 1.1 Section configuration

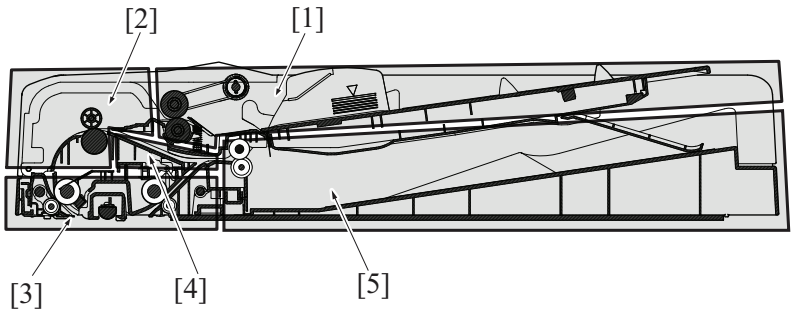


| | | | |
|---|---|---|---|
| [1] | Document feed section | [2] | Document registration section |
| [3] | Document reading section | [4] | Document switchback section |
| [5] | Document exit section | - | - |

### 1.2 Paper path

#### 1.2.1 1-sided paper path

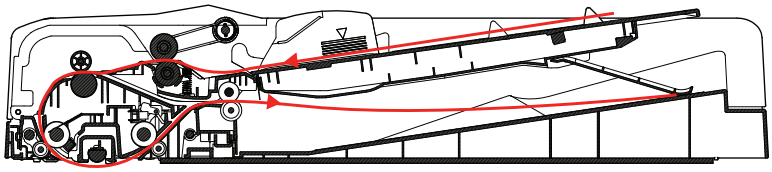

#### 1.2.2 2-sided paper path

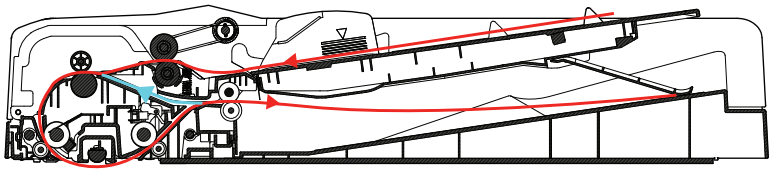

### 1.3 Main part configuration

#### 1.3.1 Main electrical part

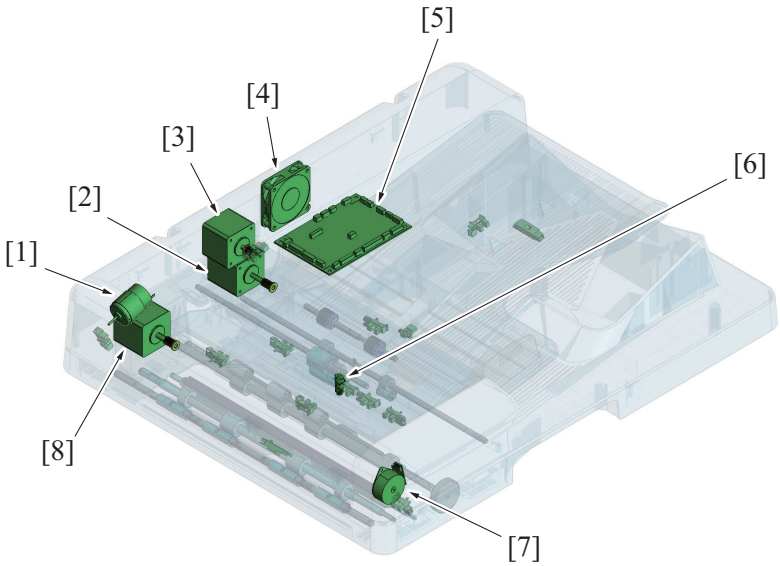


| | | | |
|---|---|---|---|
| [1] | Reading roll release motor (M5) | [2] | Registration motor (M3) |
| [3] | Document feed motor (M2) | [4] | DF cooling fan motor (FM1) |
| [5] | DF control board (DFCB) | [6] | Stamp Unit (SP-501) * option |
| [7] | Glass cleaning motor (M4) | [8] | Document reading motor (M1) |

### 1.3.2 Sensor

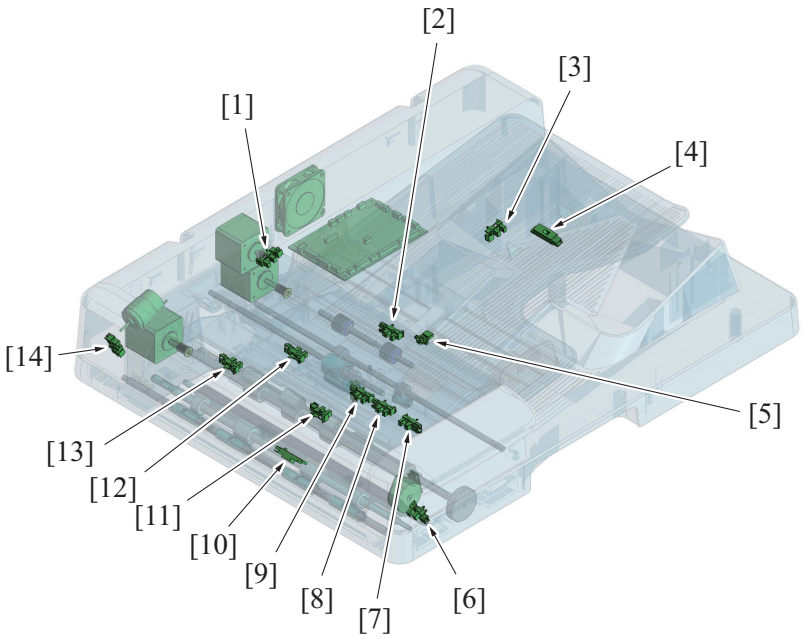


| | | | |
|---|---|---|---|
| [1] | Upper door sensor (PS13) | [2] | Document empty sensor (PS1) |
| [3] | Document length size sensor/1 (PS6) | [4] | Document length size sensor/2 (PS7) |
| [5] | Document width size sensor (VR1) | [6] | Document reading glass cleaning sensor (PS12) |
| [7] | Mixed original sensor/3 (PS10) | [8] | Mixed original sensor/2 (PS9) |
| [9] | Mixed original sensor/1 (PS8) | [10] | Document reading sensor (PS4) |
| [11] | Document exit sensor (PS5) | [12] | After Separate sensor (PS2) |
| [13] | Document registration sensor (PS3) | [14] | Reading roll position sensor (PS11) |

### 1.3.3 Roller placement

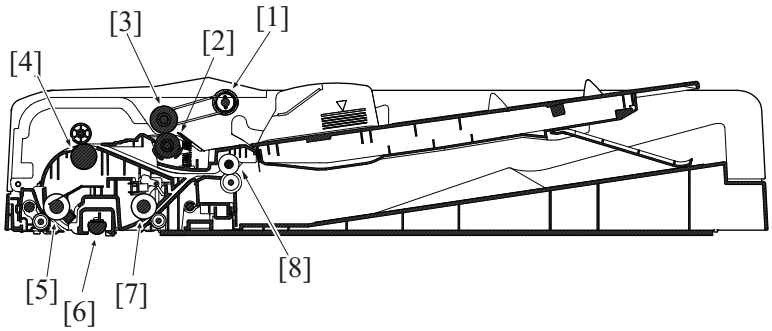


| | | | |
|---|---|---|---|
| [1] | Document pick-up roller | [2] | Document separation roller |
| [3] | Document feed roller | [4] | Registration roller |
| [5] | Document reading roller/1 | [6] | Document reading glass cleaning roller |
| [7] | Document reading roller/2 | [8] | Document switchback exit roller |

# 2. DRIVE

## 2.1 Paper feed drive

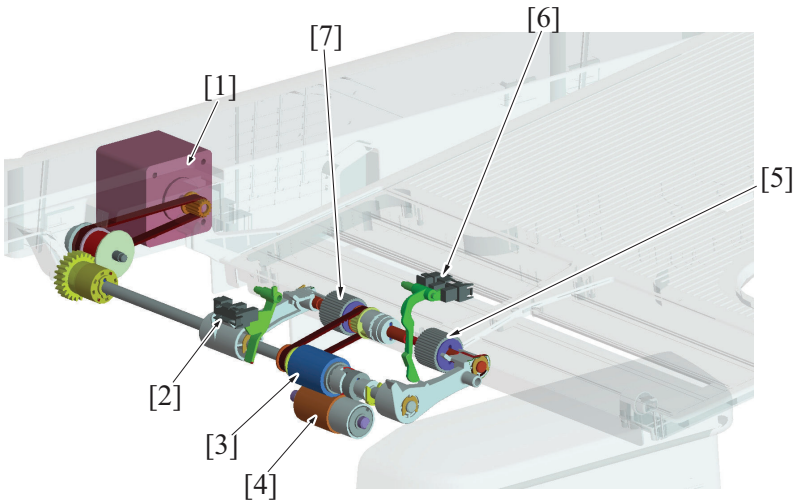


| | | | |
|---|---|---|---|
| [1] | Document feed motor (M2) | [2] | After separate sensor (PS2) |
| [3] | Document feed roller | [4] | Document separation roller |
| [5] | Document pick-up roller | [6] | Document empty sensor (PS1) |
| [7] | Document pick-up roller | - | - |

- The document feed section consists of the document pick-up roller, document feed roller, as well as the document separation roller, and is directly driven by the document feed motor.
- When the start key is pressed, the document pick-up roller lowers to press the original, and the original is taken up and fed in. The original is transported to the registration roller by the document pick-up roller and document feed roller.
- After the take-up and feeding sequence, the document feed motor is rotated backward, which raises the document pick-up roller.

## 2.2 Registration drive

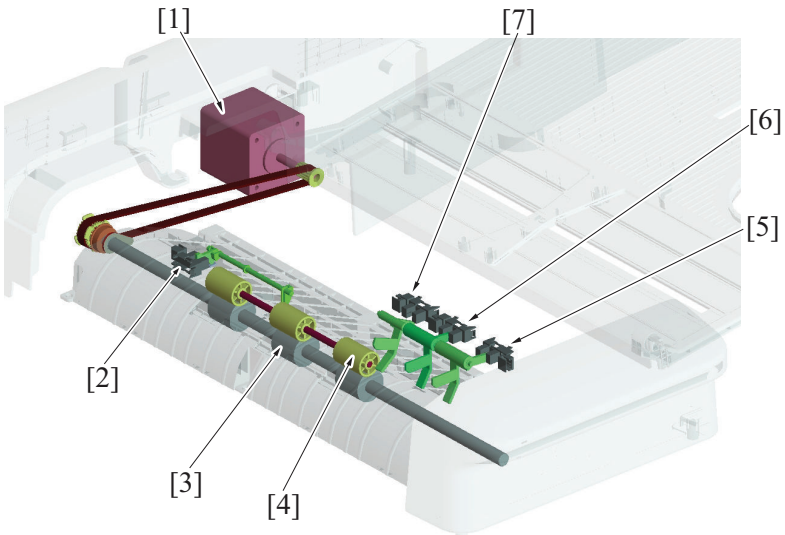


| | | | |
|---|---|---|---|
| [1] | Registration motor (M3) | [2] | Document registration sensor (PS3) |
| [3] | Registration roller | [4] | Registration roll |
| [5] | Mixed original sensor/3 (PS10) | [6] | Mixed original sensor/2 (PS9) |
| [7] | Mixed original sensor/1 (PS8) | - | - |

- Timing at which to start transporting the original is controlled using the registration motor.
- The original is pressed against the registration roller and registration roll. This forms a loop in the original to thereby correct any skew in the original.
- Mixed original sensors/1, 2/, and 3/ detect width of the originals in the mixed original mode.

## 2.3 Document reading drive

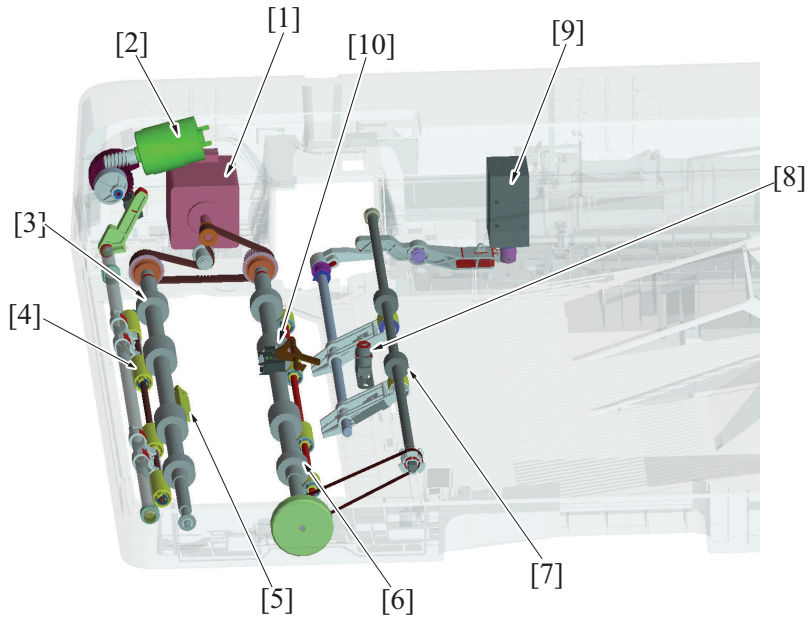


| | | | |
|---|---|---|---|
| [1] | Document reading motor (M1) | [2] | Reading roll release motor (M5) |
| [3] | Document reading roller/1 | [4] | Document reading roll |
| [5] | Document reading sensor (PS4) | [6] | Document reading roller/2 |
| [7] | Document exit roller | [8] | Stamp unit (SP-501) * option |
| [9] | Document exit roller release solenoid (SD1) | [10] | Document exit sensor (PS5) |

- The document reading motor drives the document reading section and document exit section.
- The document reading roll is equipped with a pressure/release mechanism. The pressure is released when the trailing edge of the original moves past the roller.
- The document reading motor rotates backward to allow the second feed of the original to be performed during switchback in the 2-sided mode.
- The document exit roll is equipped with a pressure/release mechanism. The pressure is released when the original is fed in a second time so that its second side can be read.

## 2.4 Document reading glass cleaning drive

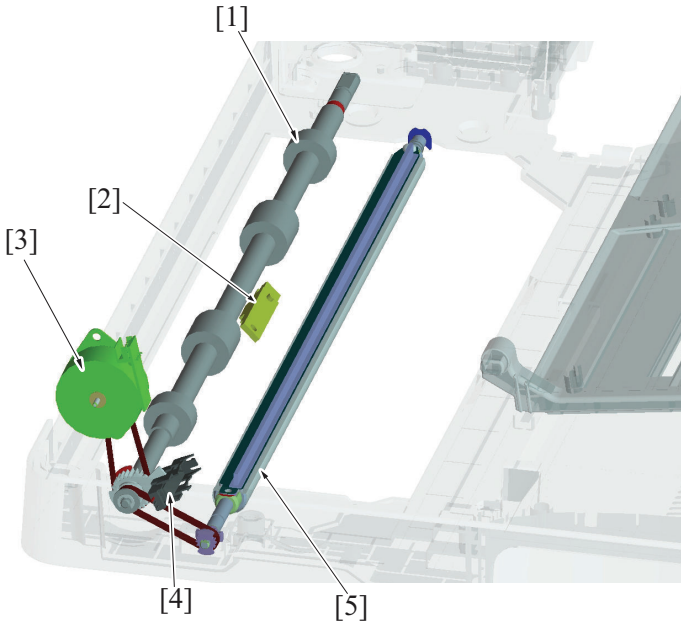


| | | | |
|---|---|---|---|
| [1] | Document reading roller | [2] | Document reading sensor (PS4) |
| [3] | Glass cleaning motor (M4) | [4] | Document reading glass cleaning sensor (PS12) |
| [5] | Document reading glass cleaning brush | - | - |

- The glass cleaning motor drives the document reading glass cleaning brush.
  The position of the cleaning brush is controlled by the document reading glass cleaning sensor.

# 3. OPERATION

## 3.1 Document feed section

### 3.1.1 Document set/empty detection

- When an original is loaded on the document feed tray, the document empty sensor detects that there is original.
- If no original is loaded when the document pick-up roller is in the standby position, the actuator blocks the document empty sensor and it is detected that no original is loaded.
- When an original is loaded on the document feed tray, the leading edge of the original pushes the actuator so that the document empty sensor is unblocked. It is detected that an original is loaded.
- When all pages of the original are fed in, the document empty sensor detects that there is no original on the document feed tray.

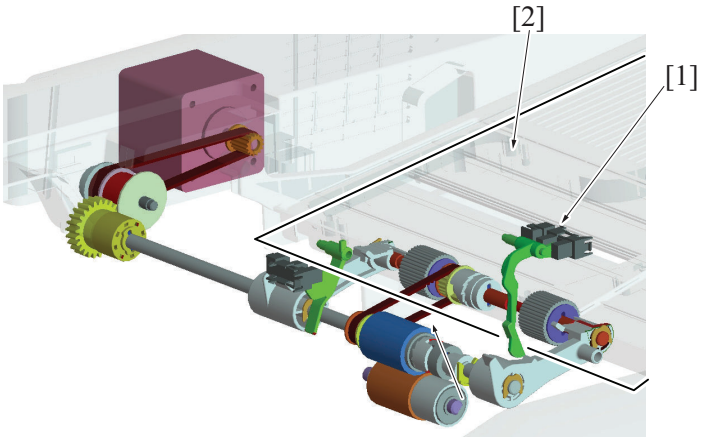


| | | | |
|---|---|---|---|
| [1] | Document empty sensor (PS1) | [2] | Original |

### 3.1.2 Document size detection mechanism

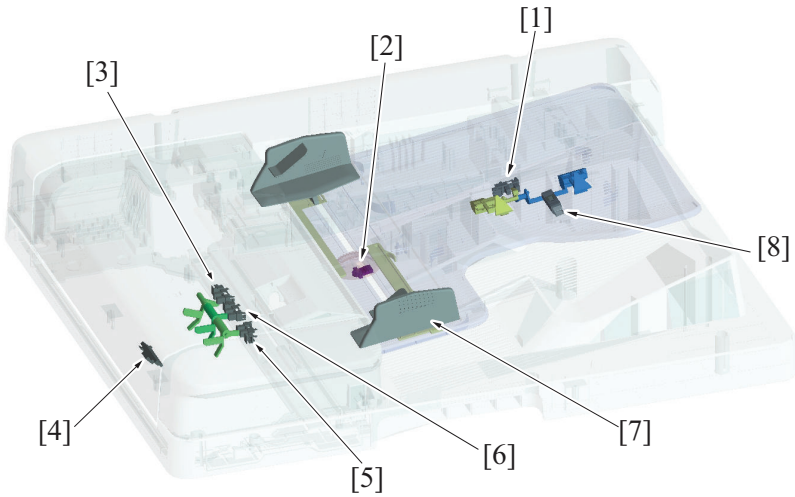


| | | | |
|---|---|---|---|
| [1] | Document length size sensor/1 (PS6) | [2] | Document width size sensor (VR1) |
| [3] | Mixed original sensor/1 (PS8) | [4] | Document reading sensor (PS4) |
| [5] | Mixed original sensor/3 (PS10) | [6] | Mixed original sensor/2 (PS9) |
| [7] | Document width guide | [8] | Document length size sensor/2 (PS7) |

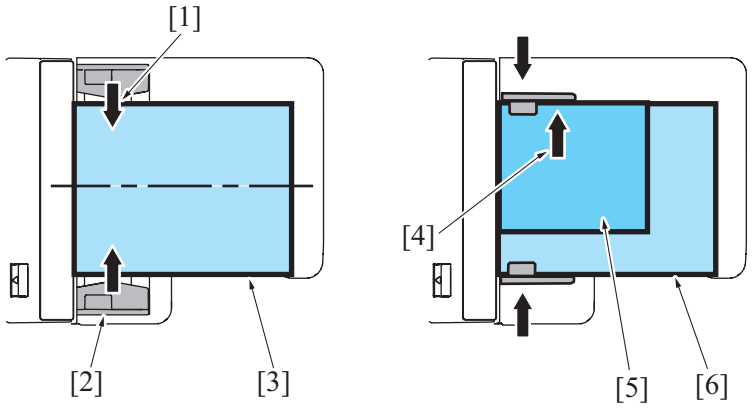


| | | | |
|---|---|---|---|
| [1] | Adjust the document width guide plates (center alignment) | [2] | Document width guide plates |

| | | | |
|---|---|---|---|
| [3] | Original (standard mode) | [4] | Align the original with narrow width with the rear side of the document width guide plates (rear alignment) |
| [5] | Original with narrow width (mixed original mode) | [6] | Original with wide width (mixed original mode) |

### (1) Detecting the width of the original

- The width of the original is set on the document feed tray will be detected by the document width size sensor.
- A variable resistor is incorporated in the document width size sensor. Its resistance value varies in association with the movement of the document width guide.
- The original is to be loaded in the original feed tray by aligning it with reference to the center of the document feed tray in the standard mode. In the mixed original mode, the original is aligned to the rear side of the document width guide plate.

### (2) Detecting the length of the original

- The length of the original is set on the document feed tray will be detected by the document length size sensors/1 and /2.
- The document length size sensor/1 is a transmission type, while document length size sensor/2 is a reflection type. The document length size sensor/1 is detected by two actuators, that is, actuator/1 and actuator/2.
- When the document feed tray is not loaded with any originals, document length size sensor/1 is blocked. When an original is loaded and only actuator/1 is pressed, document length size sensor/1 is unblocked. When both actuator/1 and actuator/2 are pressed, a blocked document length size sensor/1 is detected by actuator/2.

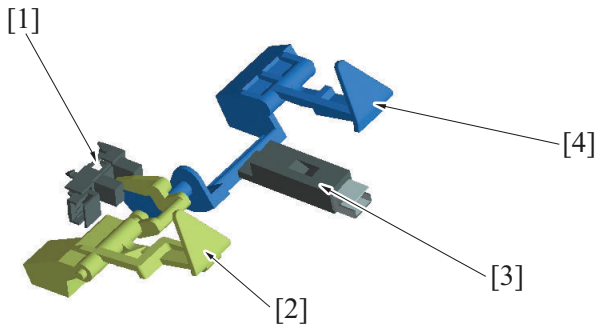


| | | | |
|---|---|---|---|
| [1] | Document length size sensor/1 (PS6) | [2] | Actuator/1 |
| [3] | Document length size sensor/2 (PS7) | [4] | Actuator/2 |

### (3) Detecting the width of the original (in the mixed original/AMS mode)

- In the mixed original/AMS mode, no width is determined on the document feed tray; rather, the width is detected while the originals are being fed. Three mixed original sensors are disposed at positions immediately after the document feed section, functioning to detect the width of the original.

### (4) Detecting the length of the original (in the mixed original/AMS mode)

- In the mixed original/AMS mode, no length is determined on the document feed tray; rather, the length of the original is calculated and determined based on the period of time during which the document reading sensor remains activated.

### (5) Document feed tray size detection

- The original size is determined by the combination of the results of detection made of the width and length of the original.

| | | | | | |
|---|---|---|---|---|---|
| Document length size sensor/2 (PS7) | | OFF | OFF | Reflector | Reflector |
| Document length size sensor/1 (PS6) | | Blocked | Unblocked | Unblocked | Blocked |
| Document width size sensor (VR1) | 114.5 | Postcard | B5S | A4S | A3 |
| | 136 | B6S | B5S | A4S | A3 |
| | 163 | A5S | B5S | A4S | A3 |
| | 190.6 | B5S | B5S | A4S | A3 |
| | 236.5 | A5 | Letter S | A4S | Foolscap |
| | 266.2 | B5 | B4 | B4 | B4 |
| | 286.2 | Letter | Ledger | Ledger | Ledger |
| | (307) | A4 | A3 | A3 | A3 |

## 3.1.3 Pick-up roller up/down control

### (1) Up control

- When a job is completed, the document feed motor starts rotating backward. Then, the swing arm mounted on the same shaft as the document feed roller is rotated backward to thereby raise the original pick-up roller to the standby position.
- The document pick-up roller is fixed at the raised position by a torque limiter of the paper drive section.
- When the swing arm is raised to the standby position, the document stopper is lowered by its own weight and fixed by the lock pawl of the swing arm. The document stopper is unlocked when the swing arm lowers.
- The document stopper has two functions: one, to align the leading edges of the originals loaded in the standby state; and, two, to prevent the leading edge of the original from advancing over the pick-up position into the feed section.

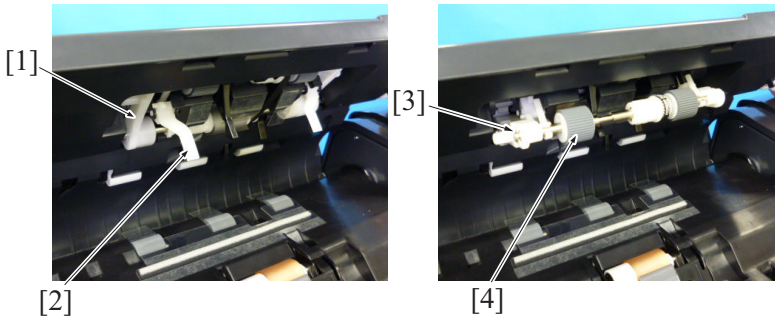


| | | | |
|---|---|---|---|
| [1] | Swing arm (standby position) | [2] | Document stopper |
| [3] | Swing arm (feed position) | [4] | Document pick-up roller |

### (2) Down control

- When the start key is pressed, the document feed motor starts rotating forward. The rotation shaft of the swing arm mounted on the same shaft as the document feed roller is rotated forward, so that the original pick-up roller is lowered to the feed position.
- The document stopper is unlocked when the swing arm lowers.

## 3.1.4 Document feed/separation control

- When the start key is pressed, the document feed motor starts rotating forward, so that the document feed roller rotates forward.
- The rotation shaft of the swing arm mounted on the same shaft as the document feed roller is rotated forward, so that the document pick-up roller is lowered to the feed position. The document pick-up roller is rotated by a drive belt to thereby feed the original onto the document feed roller.

### (1) Separation/feed operation

1. The document separation roller is pressed up against, and driven by, the document feed roller. A torque limiter is mounted on the shaft of the document separation roller.
2. The acting pressure of the document feed roller/document separation roller/torque limiter serves as the limit torque for preventing double feed.
3. When there is no original or only one sheet of original between the document separation roller and the document feed roller, the limit torque is exceeded and the document separation roller follows the rotation of the document feed roller.
4. If there are two or more sheets of original between the document separation roller and the document feed roller, the limit torque is greater than the friction force of the original, so that the document separation roller stops rotating.
5. Because of the stationary document separation roller, the lower sheet of original in contact with the document separation roller is not fed in, so that the first sheet of original is original separated from the second sheet of original.

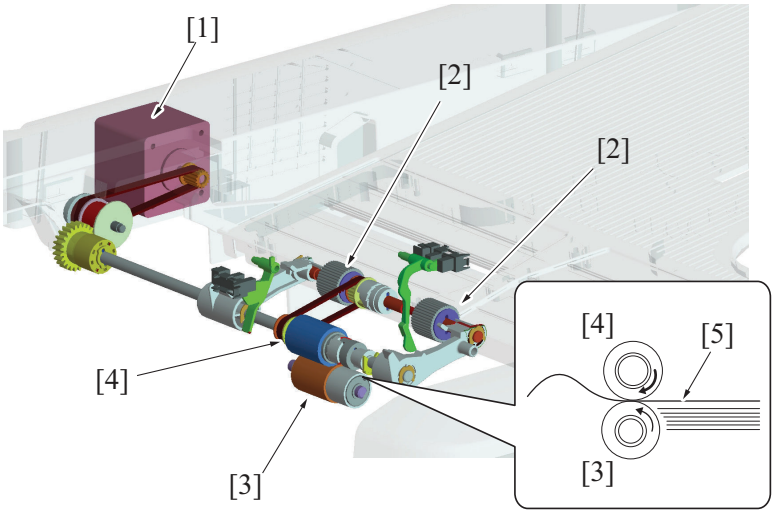


| | | | |
|---|---|---|---|
| [1] | Document feed motor (M2) | [2] | Document pick-up roller |
| [3] | Document separation roller | [4] | Document Feed roller |
| [5] | Original | - | - |

### (2) Periodically replaced parts

- The document pick-up roller, document feed roller, and document separation roller are periodically replaced parts.
- At replacing the rollers, the paper feed assembly (document pick-up roller + document feed roller) and document separation roller must be replaced at the same time.
- Otherwise, the document pick-up roller, document feed roller, and document separation roller must be replaced at the same time.
- None of the document pick-up rollers, document feed rollers, and document separation roller are provided with a new article detection mechanism. When the three rollers are replaced with new ones, the “ADF Feed” counter must be reset to zero using “Counter / Life” of the Service Mode.

- The number of times the DF has been subjected to paper feed operations can be checked with the “ADF Feed” counter of the Service Mode.

| | |
|---|---|
| Periodical replacement cycle | Paper feed operations 200,000 times |

- Refer to "Replacing the document roller assembly", "F.7.1.3 Replacing the paper feed assy.", "F.7.1.5 Replacing the separation roller assy" for methods of replacing document pick-up roller, document feed roller, document separation roller, and details of the Service Mode.

**(a) Paper feed assembly**

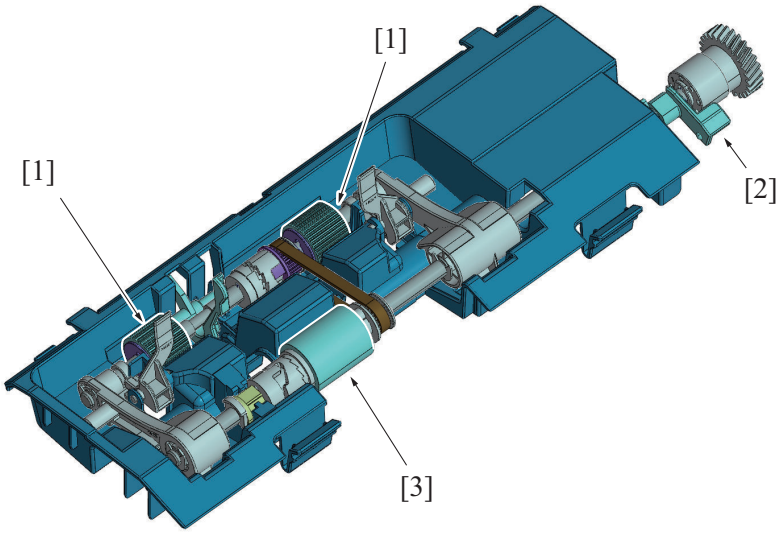


| | | | |
|---|---|---|---|
| [1] | Document pick-up roller | [2] | Paper feed asssembly lock lever |
| [3] | Document feed roller | - | - |

**(b) Document feed roller / Document pick-up roller**

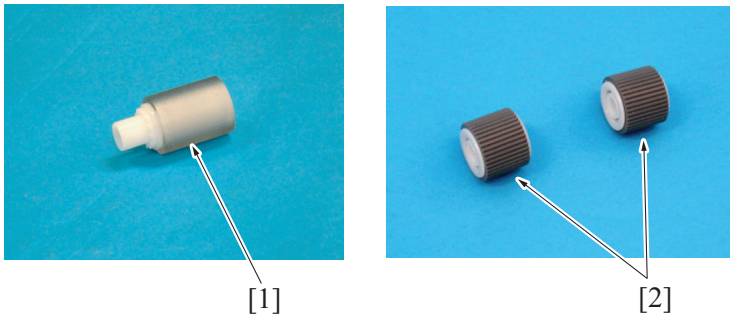


| | | | |
|---|---|---|---|
| [1] | Document feed roller | [2] | Document pick-up roller |

**(c) Document separation roller**

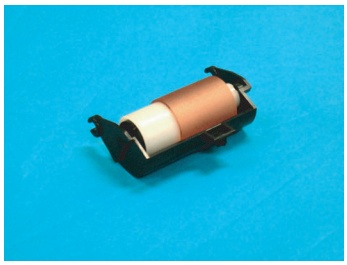

### 3.1.5 Document separation roller pressure switching mechanism

- As a solution to misfeed problems when they occur, the pressure of the document separation roller can be changed as necessary.
- Inserting a spacer into a space below the spring that applies pressure to the document separation roller will increase the pressure.
- The pressure may be set in two steps selectable according to the direction in which the spacer is inserted.
- The spacer is disposed beside the document separation roller.
- For details, see “I.12.1.3 Adjusting the pressure of the separation roller”.

## 3.2 Document registration section

### 3.2.1 Document registration outline

- The registration motor provides the drive for the registration roller.
- The original will create a loop between the document feed roller and the registration roller when the original is being conveyed in order to correct the skew.

### 3.2.2 Document registration loop formation process

1. The registration sensor detects the leading edge of the original.
2. The registration roller remains stationary.
3. Because the document feed roller (document switchback exit roller for the 2nd side of the original) continues rotating to feed the original, a loop is formed at the leading edge of the original.
4. The loop corrects skew in the original.
5. The registration roller is started to rotate to transport the original.

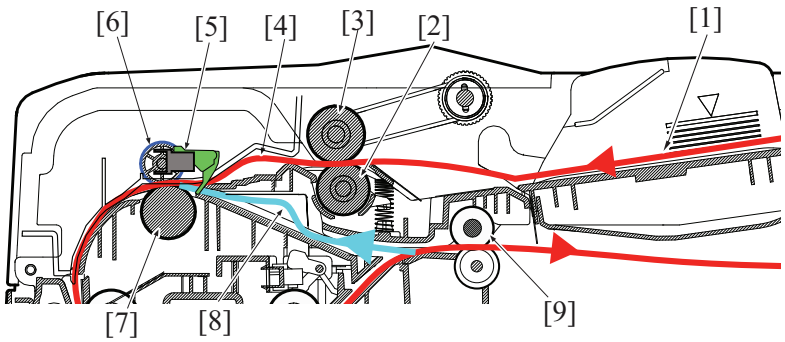


| | | | |
|---|---|---|---|
| [1] | Original | [2] | Document separation roller |
| [3] | Document feed roller | [4] | Loop formation (1st side) |
| [5] | Document registration sensor (PS3) | [6] | Registration roll |
| [7] | Registration roller | [8] | Loop formation (2nd side) |
| [9] | Document switchback exit roller | - | - |

## 3.3 Document reading section

### 3.3.1 Transport mechanism

- The original transported from the document feed section will be transported to the document reading section by the registration roller, the document reading roller/1 and /2, and the document switchback exit roller.
- The registration roller is driven by the registration motor.
- The document reading roller/1 and /2 are driven by the document reading motor.

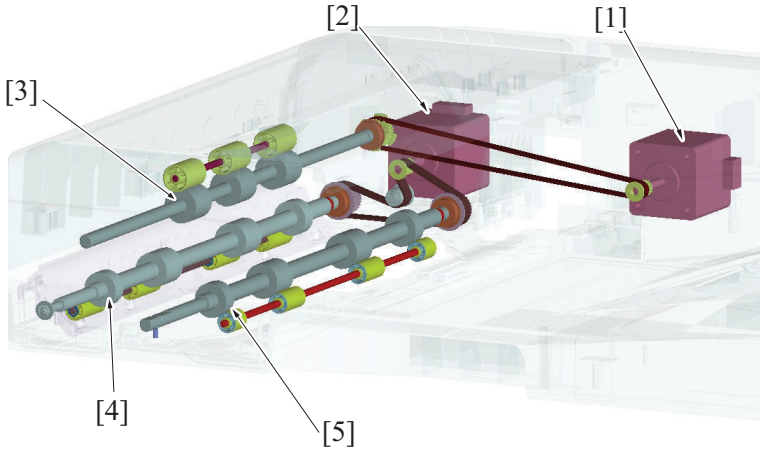


| | | | |
|---|---|---|---|
| [1] | Registration motor (M3) | [2] | Document reading motor (M1) |
| [3] | Registration roller | [4] | Document reading roller/1 |
| [5] | Document reading roller/2 | - | - |

### 3.3.2 Document reading glass cleaning mechanism

#### (1) DF original glass cleaning

- A reading line can occur if the DF original glass is contaminated with dust or dirt. The DF original glass cleaning mechanism prevents this fault from occurring.
- A half face of the document reading glass cleaning roller is provided with the document reading glass cleaning brush. While the original is being read, the document reading glass cleaning brush faces up. When the DF original glass is to be cleaned, the document reading glass cleaning roller rotates, so that the document reading glass cleaning brush faces the DF original glass.
- The document reading glass cleaning brush is drive by the glass cleaning motor.
- The position of the cleaning brush is controlled by the document reading glass cleaning sensor.

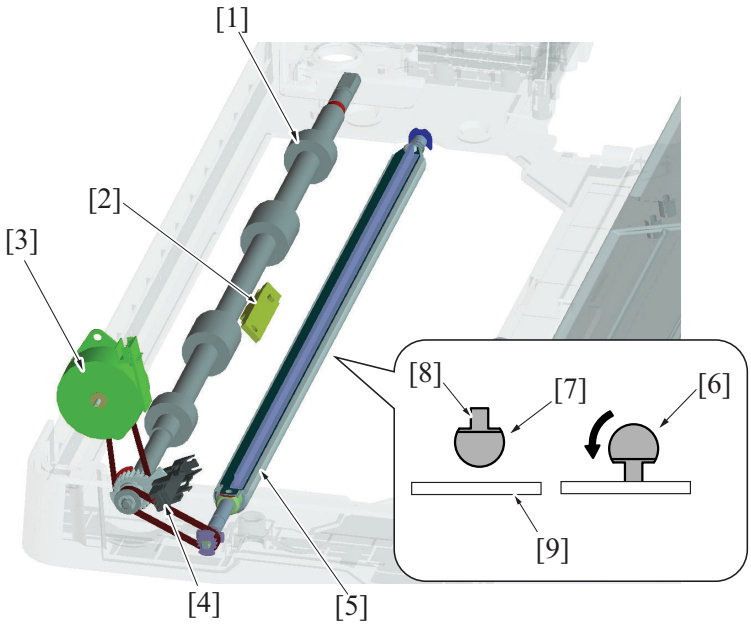


| | | | |
|---|---|---|---|
| [1] | Document reading roller | [2] | Document reading sensor (PS4) |
| [3] | Glass cleaning motor (M4) | [4] | Document reading glass cleaning sensor (PS12) |
| [5] | Document reading glass cleaning roller | [6] | Document reading glass cleaning roller (cleaning position) |
| [7] | Document reading glass cleaning roller (standby position) | [8] | Cleaning brush section |
| [9] | Document reading glass | - | - |

### (2) Details of original reading glass cleaning

| Condition | | Cleaning operation |
|---|---|---|
| Predrive | Power ON | Rotates the document reading glass cleaning brush one complete turn to check for its correct operation. (forward rotation) |
| | Exiting from sleep | |
| Start key ON | Before starting reading | Rotates the document reading glass cleaning brush one complete turn to perform cleaning. (forward rotation: default setting) |
| | During reading | Rotates the document reading glass cleaning brush one complete turn to perform cleaning for every two originals during continuous reading of originals. (forward rotation) |
| | | Rotates the document reading glass cleaning brush three complete turns to perform cleaning for each original during continuous reading of originals, if [Original Settings] -> [Despeckle] *1 is selected. (forward rotation)<br>Because the document reading glass cleaning brush is rotated three complete turns to perform the cleaning, however, the original-to-original distance is widened than at normal timing. This results in reduced productivity in reading the originals. |
| | | No document glass cleaning sequence is performed between originals during continuous reading of originals, if [System2] -> [ADF Scan Glass Contamin. Set.] -> [Feed Cleaning Settings] -> [0] *2 is selected in the Service Mode. |
| | After completing reading last original | The document reading glass cleaning brush tends to curl if repeatedly operated in one direction only, resulting in poor cleaning performance. To straighten the brush, it is rotated one complete turn in the backward direction when reading of the last original is completed. (backward rotation) |

**(a) *1: Despeckle mode setting screen**

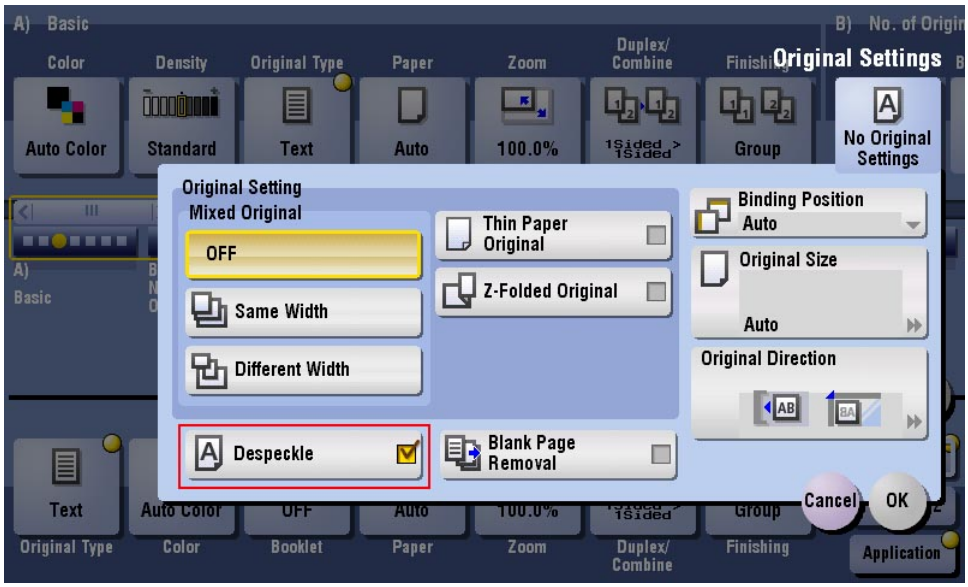


**(b) *2: Feed cleaning settings screen**

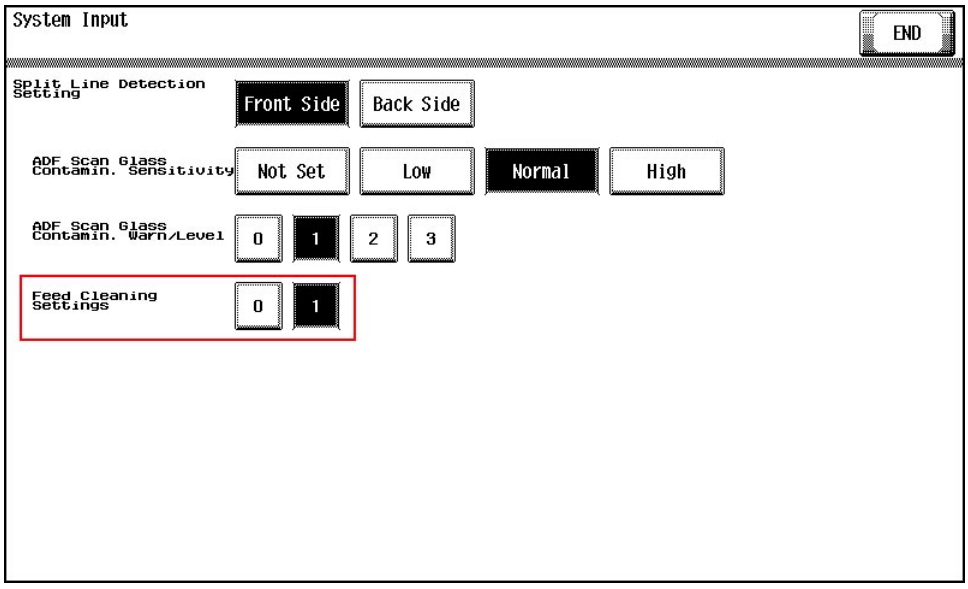


### 3.3.3 Document reading roll pressure/release control

- Rotation of the reading roll release motor drives the cam, which pushes the lever, so that the original reading roll is spaced apart from the document reading roller.
  Pressure and release positions are detected by the reading roll position sensor.

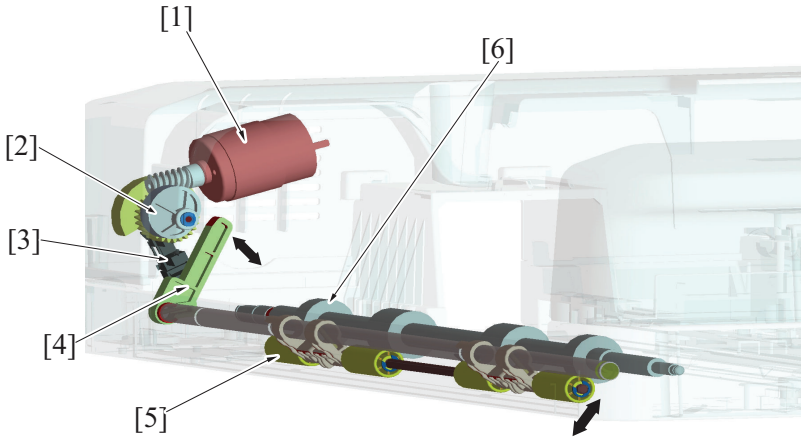


| | | | |
|---|---|---|---|
| [1] | Reading roll release motor (M5) | [2] | Cam |
| [3] | Reading roll position sensor (PS11) | [4] | Lever |
| [5] | Reading roll | [6] | Document reading roller |

### 3.3.4 Document reading front guide

- Open the document reading guide to handle documents that are caught between the document reading roller/1 and the document reading roll.
- Open the original reading guide to clean the original reading roller/1 and the original reading sensor flock fabric.
- A spring is mounted to the document reading guide, therefore holding it by one hand is required at the time of handling a document. After you finished handling the document, release the hand holding the guide and return the guide to its normal position.
- No open-close sensor is mounted to the document reading guide.

Scanner side-view drawing

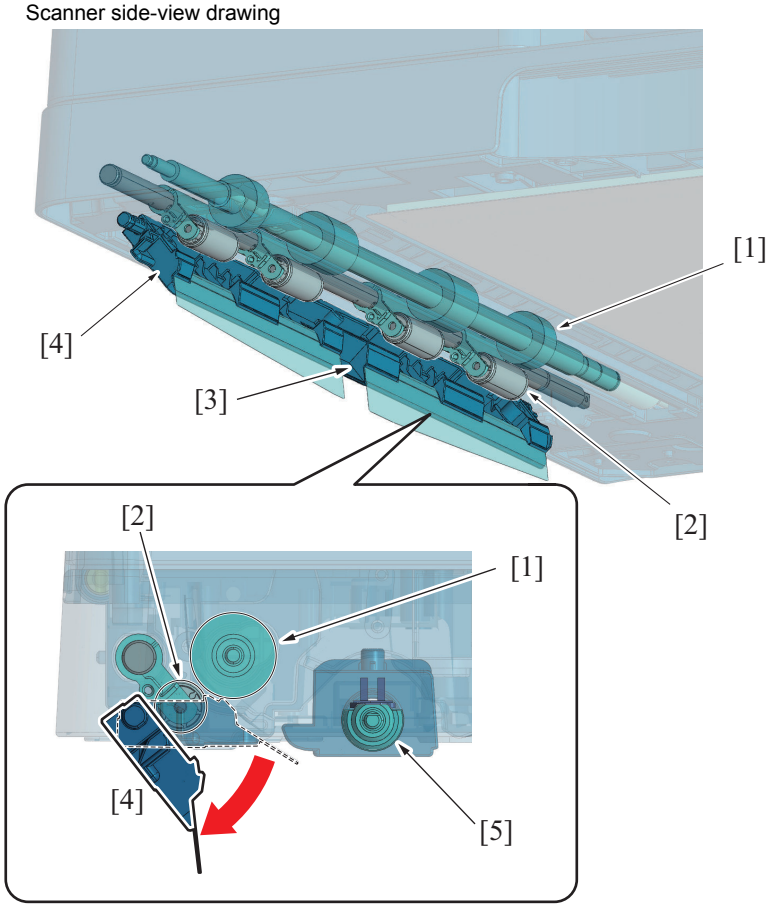


| | | | |
|---|---|---|---|
| [1] | Document reading roller/1 | [2] | Document reading roll |
| [3] | Flock fabric | [4] | Document reading guide |
| [5] | Original reading glass cleaning roller | - | - |

## 3.4 Document switchback/exit section

### 3.4.1 Document switchback/exit mechanism

- The original transported from the transport section will exit by the document reading roller/1, /2 and document switchback exit roller.
- In the 2-sided mode, the document switchback exit roller is rotated backward and the original is fed to the registration roller again.
- The document switchback exit roller is driven by the document reading motor.

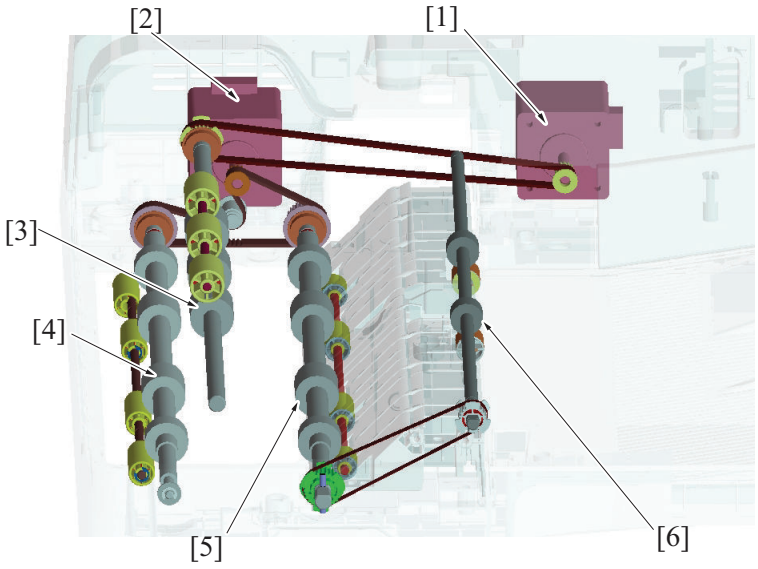


| | | | |
|---|---|---|---|
| [1] | Registration motor (M3) | [2] | Document reading motor (M1) |

| | | | |
|---|---|---|---|
| [3] | Registration roller | [4] | Document reading roller/1 |
| [5] | Document reading roller/2 | [6] | Document switchback exit roller |

### 3.4.2 Switching mechanism for document switchback/exit

#### (1) Document switchback section

- The switchback path switching guide film provides a route toward the switchback path.
- In the 2-sided mode, the document switchback exit roller is rotated backward. This allows the trailing edge of the original to move along the upper side of the switchback path switching guide film to be fed to the switchback path, so that the original is fed to the registration roller.
- The switchback path switching guide film is fixed at all times.

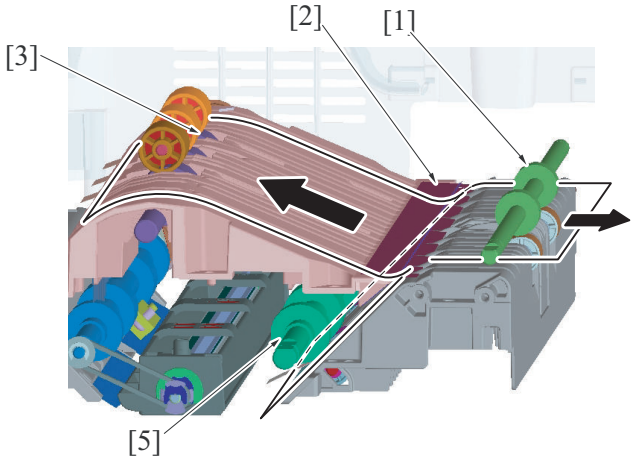


| | | | |
|---|---|---|---|
| [1] | Document switchback exit roller | [2] | Switchback path switching guide film |
| [3] | Registration roller | - | - |

### 3.4.3 Switchback exit roll pressure/retraction control

- Operation of the document exit roller release solenoid causes the lever to be pushed down and the document exit roll to be lowered, so that the document exit roll is spaced away from the document exit roller.
- This spacing operation is performed during switchback for reading of the back side of the originals and for putting pages in numerical order in the 2-sided mode.

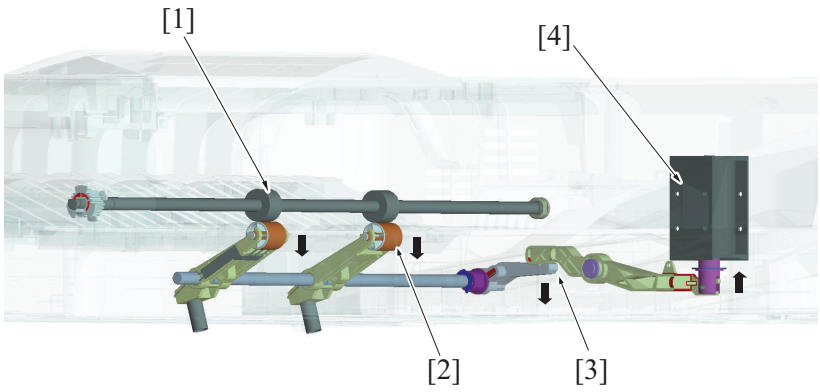


| | | | |
|---|---|---|---|
| [1] | Document switchback exit roller | [2] | Document exit roll |
| [3] | Lever | [4] | Document exit roller release solenoid (SD1) |

### 3.4.4 Faxed document stamp function

- Mounting the optional “Stamp unit SP-501” allows a stamp to be placed on a faxed document.
- The stamp solenoid located upstream of the document exit roller is energized when the original is about to be fed out and the stamp mounted on the solenoid plunger is pressed against the surface of the original. This places a faxed mark (+) on the surface of the original.
- This function is enabled when “System2/Stamp/Set*1 (default setting: Unset)” is turned ON using the Service Mode and the user selects “Application/TX Stamp*2 (default setting: OFF)” on the “Scan/Fax” screen.
- This function is not used for “Copy” or “Scan”.

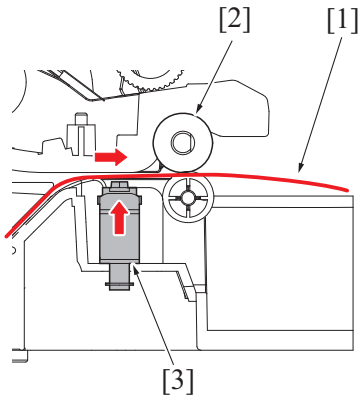


| | | | |
|---|---|---|---|
| [1] | Original | [2] | Document switchback exit roller |
| [3] | Stamp unit (SP-501) | - | - |

***1: Stamp mounting setting screen**

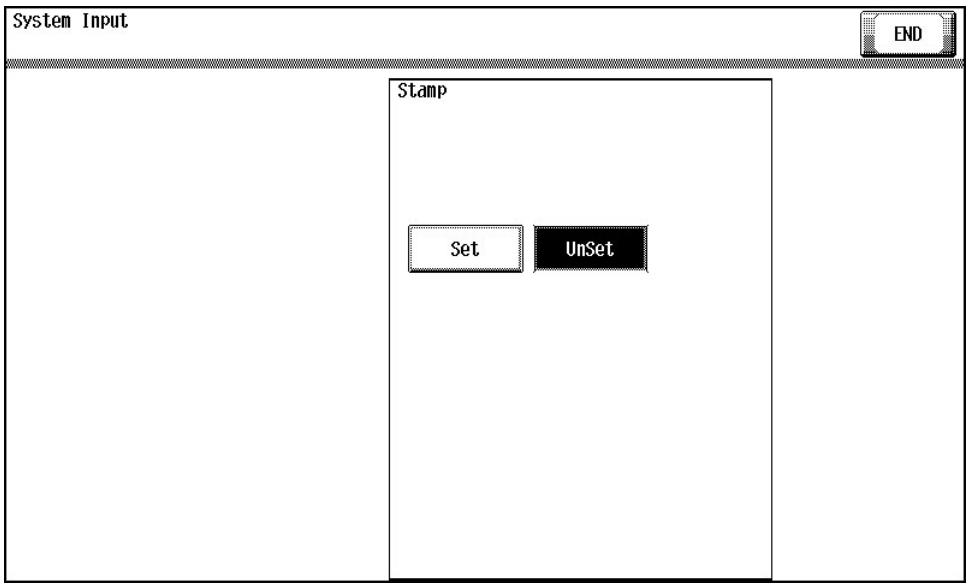


***2: TX Stamp setting screen**



## 3.5 Paper path operation

### 3.5.1 1-sided mode

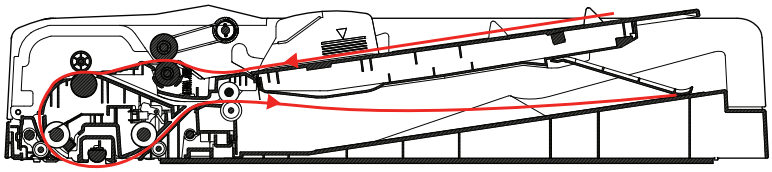

1. Pressing the start key will lower the document pick-up roller and press the original.
2. The document pick-up roller, document feed roller and document separation roller will start rotating to start feeding the first sheet of paper.
3. When the paper reaches the registration roller, a loop is formed in the paper. Then, the registration motor is started, so that the registration roller transports the paper.
4. The document feed motor is deenergized when a predetermined period of time elapses after the registration motor has been activated. The document reading motor will start running.
5. It starts reading from the leading edge of the original when the document reading sensor turned ON and the predetermined period of time has passed.
6. The document reading roll will be retracted right before the back edge of the original passes through the document reading roller/1. After a predetermined period of time, document reading roll will be pressed again to prepare for the next original.
7. The original will be exit by document reading roller/2 and the document exit roller.
8. All motors will turn OFF after the trailing edge of the original turns OFF the document exit sensor and the predetermined period of time is passed.

### 3.5.2 2-sided mode

1. In the same manner as in the 1-side mode, the first side of the original is read.

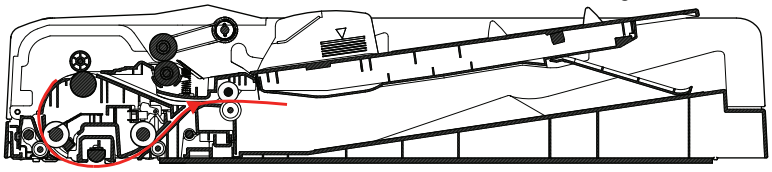

2. After the original moves past document reading roller/2, the document reading motor is rotated backward and the original is transported to the switchback section.

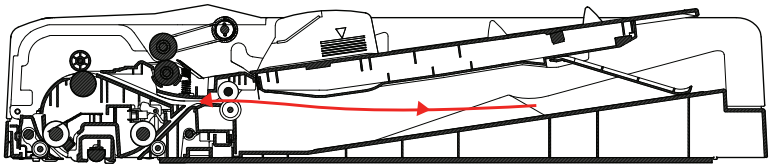

3. It starts reading from the leading edge of the original when the document reading sensor turned ON and the specified period of time has passed.

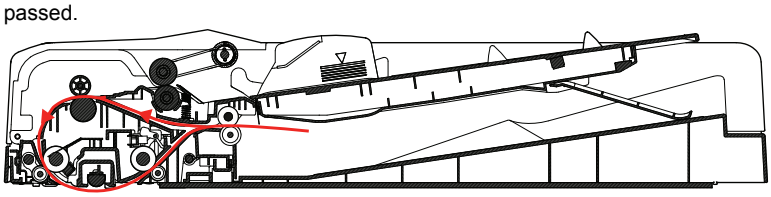

4. To ensure that the front and back sides of the originals are in correct order, the original undergoes the similar switchback operation again before being fed into the tray.

## 3.6 DF open/close detection mechanism

### 3.6.1 Document exchange detection control

- An angle detection mechanism is provided to detect the operation of exchanging originals when the DF is used as the original cover of the main body.
- When the DF is raised to an angle of about 14.5 degrees or more, the detection lever is pushed up by a spring. The angle sensor that has been blocked by the detection lever is now unblocked. It is, as a result, detected that the DF “is raised to an angle of 14.5 degrees or more”.
- When, on the other hand, the DF is lowered to an angle of about 14.5 degrees or less, the detection lever is pushed down. Then, the angle sensor, which has been unblocked, is blocked, so that it is detected that the DF “is lowered to an angle of 14.5 degrees or less”.
- When the DF state undergoes changes from a condition of being fully lowered to a condition of “being raised to an angle of 14.5 degrees or more” and then to a condition of “being lowered to an angle of 14.5 degrees or less”, it is determined that “an original is placed manually on the original glass”. Then the original size detection control will be started.

### 3.6.2 DF open/close detection

- The magnet is installed to detect the open/close status of the DF on the main body side.
- The original cover sensor on the main body will turn ON by the magnet when lowering the DF.

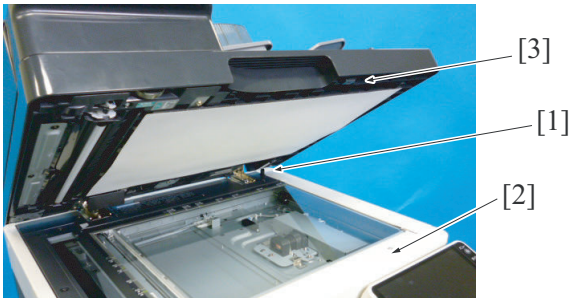


| | | | |
|---|---|---|---|
| [1] | Angle sensor (PS202) | [2] | Original cover sensor (RS201) |
| [3] | Magnet | - | - |

## 3.7 Cooling inside the unit mechanism

- The DF cooling fan motor functions to cool the inside of DF, DF control board, and document feed motor in the DF.
- It discharges heat generated inside the DF out through the exhaust port.

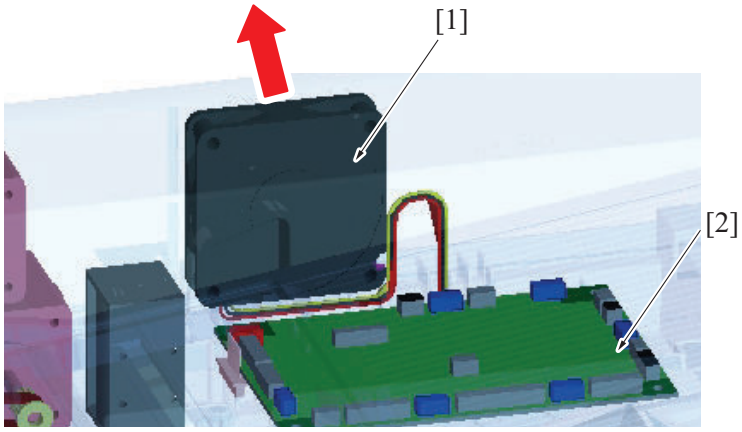


| | | | |
|---|---|---|---|
| [1] | DF cooling fan motor (FM1) | [2] | DF control board (DFCB) |

## 3.8 DF Skew(Front) adjustment mechanism

- The document feeder is installed to the scanner section of the machine and fixed with two hinges.
- The hinge on the right side of the machine is equipped with a DF skew (Front) adjustment mechanism.
- Turn the adjusting screw to move hinges backward or forward. It changes the relative installing position of the machine and DF. Also, it corrects the inclination of the first side image that is scanned using the CCD unit on the scanner section of the machine.

### 3.8.1 Hinge on the right side of the machine (front)

- Tighten the hinge fixing screw and turn the adjustment screw to move the hinge forward or backward. (The hinge moves forward or backward since the DF fixing plate is mounted to the machine)
- If the hinge moves towards the front side of the machine, the scale that is engraved on the hinge appears. (+ direction)
- If the hinge moves towards the rear side of the machine, the scale that is engraved on the hinge is hidden. (- direction)
- The amount of adjustment is read on a scale. (Default: 4 scales)
- The amount of correction to the hinge can be automatically measured through reading the adjustment chart in "ADF/DFSkew (Front)" of Service Mode.
  See "I.12.1.2 Adjusting front side skew feed on ADF" for details about the "ADF/DFSkew (Front)".

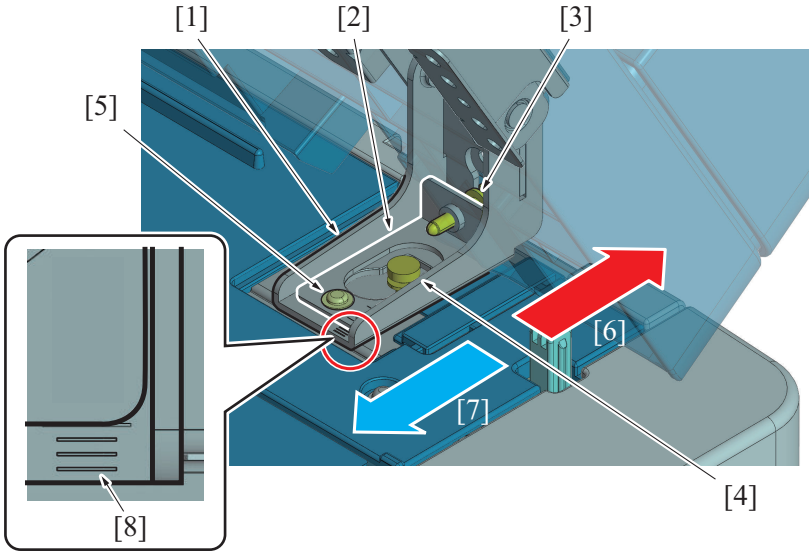

| | | | |
|---|---|---|---|
| [1] | Machine right-side hinge | [2] | DF mounting plate |
| [3] | Adjustment screw | [4] | DF mounting plate fixing screw: Fixes the DF fixing plate to the machine. |
| [5] | Hinge fixing screw: Fixes the hinge to the DF mounting plate. | [6] | Hinge movement direction: - |
| [7] | Hinge movement direction: + | [8] | Adjustment scale |

### 3.8.2 Hinge on the right side of the machine (rear)

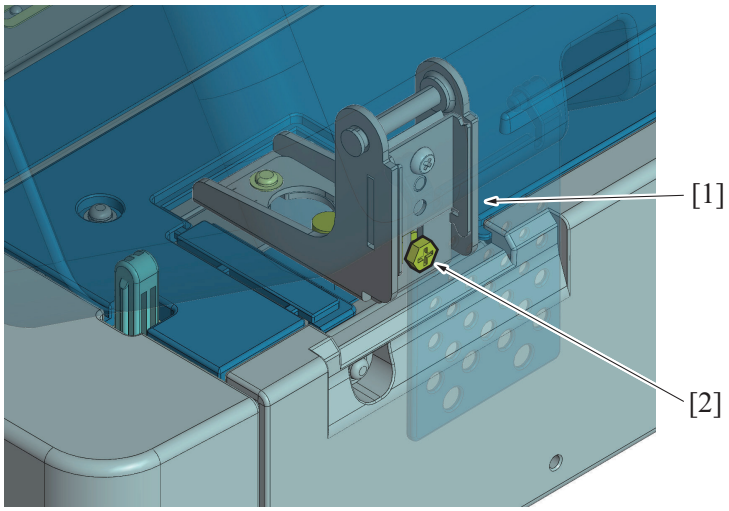


| | | | |
|---|---|---|---|
| [1] | Machine right-side hinge | [2] | Adjustment screw: Turn the adjustment screw to move the hinge backward or forward.<br>• Amount of adjustment + direction: Clockwise turn<br>• Amount of adjustment - direction: Counterclockwise turn |

### 3.8.3 Adjustment direction conceptual drawing

Upper view

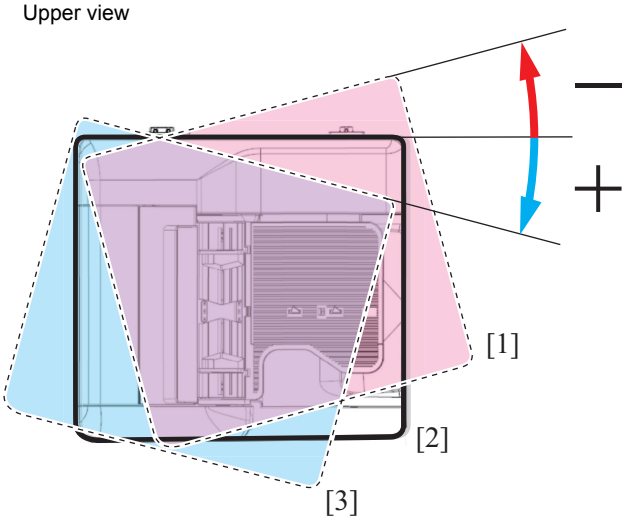


| | | | |
|---|---|---|---|
| [1] | DF movement direction (hinge movement direction): - | [2] | Home position |
| [3] | DF movement direction (hinge movement direction): + | - | - |

# PB THEORY OF OPERATION DF-704

## 1. CONFIGURATION

### 1.1 Section configuration

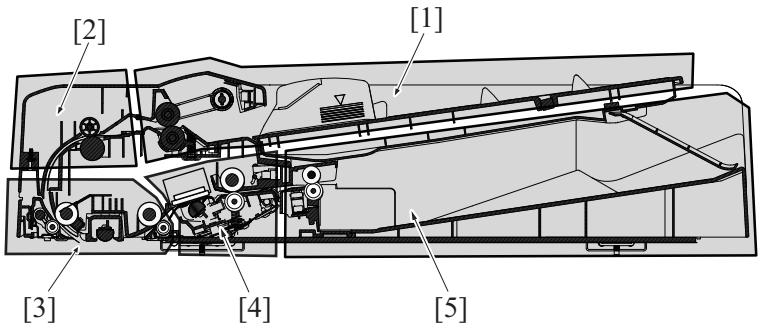


| | | | |
|---|---|---|---|
| [1] | Document feed section | [2] | Document registration section |
| [3] | 1-sided document reading section | [4] | 2-sided document reading section |
| [5] | Document exit section | - | - |

### 1.2 Paper path

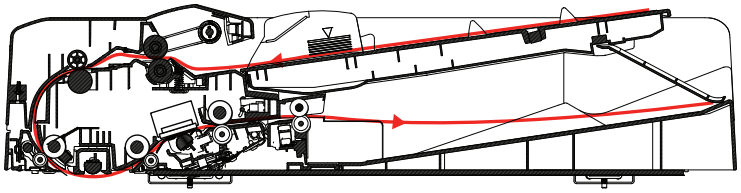

- The same paper path is established in the 1-sided mode and 2-sided mode.
- In 1-sided mode, the CCD at the scanner section reads the image of the original. In 2-sided mode, at the same timing as that when the front side of the original is read by the CCD at the scanner section, the CIS in the DF reads the back side of the original. The speed at which the original is read in the 2-sided mode is, therefore, the same that in the 1-sided mode.

### 1.3 Main part configuration

#### 1.3.1 Main electrical part

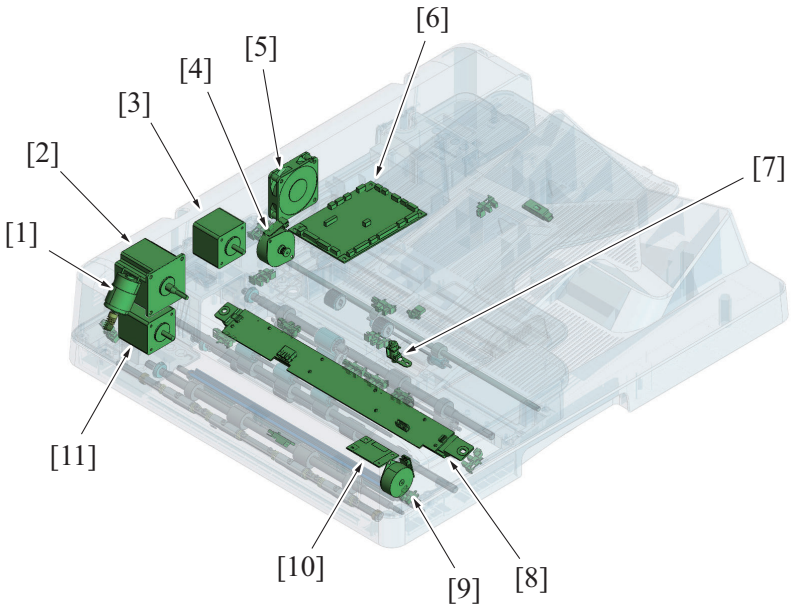


| | | | |
|---|---|---|---|
| [1] | Reading roller release motor (M4) | [2] | Document reading motor (M1) |
| [3] | Document feed motor (M2) | [4] | CIS cleaning motor (M5) |
| [5] | DF cooling fan motor (FM1) | [6] | DF control board (DFCB) |
| [7] | Stamp Unit (SP-501) * option | [8] | CIS module (CIS) |
| [9] | Document reading glass cleaning motor (M6) | [10] | CIS power supply (CISPU) |
| [11] | Registration motor (M3) | - | - |

### 1.3.2 Sensor

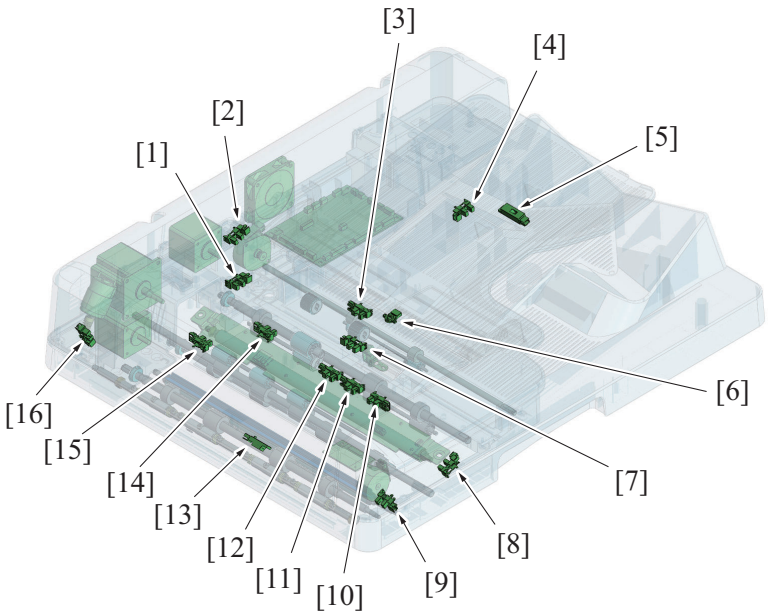


| | | | |
|---|---|---|---|
| [1] | CIS cleaning sensor (PS7) | [2] | Upper door sensor (PS14) |
| [3] | Document empty sensor (PS1) | [4] | Document length sensor/1 (PS8) |
| [5] | Document length sensor/2 (PS9) | [6] | Document width sensor (VR1) |
| [7] | Document exit sensor (PS5) | [8] | CIS cover sensor (PS15) |
| [9] | Document reading glass cleaning sensor (PS13) | [10] | Mixed original sensor/3 (PS12) |
| [11] | Mixed original sensor/2 (PS11) | [12] | Mixed original sensor/1 (PS10) |
| [13] | Document reading sensor (PS6) | [14] | After separate sensor (PS2) |
| [15] | Registration sensor (PS3) | [16] | Reading roll position sensor (PS4) |

### 1.3.3 Roller placement

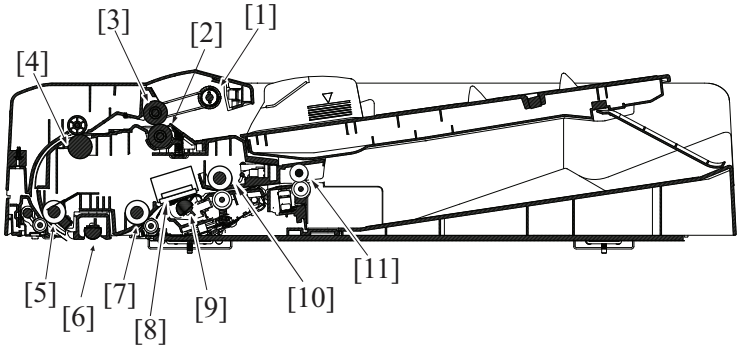


| | | | |
|---|---|---|---|
| [1] | Document pick-up roller | [2] | Document separation roller |
| [3] | Document feed roller | [4] | Registration roller |
| [5] | Document reading roller/1 | [6] | Document reading glass cleaning roller |
| [7] | Document reading roller/2 | [8] | CIS module (CIS) |
| [9] | CIS cleaning brush | [10] | Document reading roller/3 |
| [11] | Document exit roller | - | - |

# 2. DRIVE

## 2.1 Paper feed drive

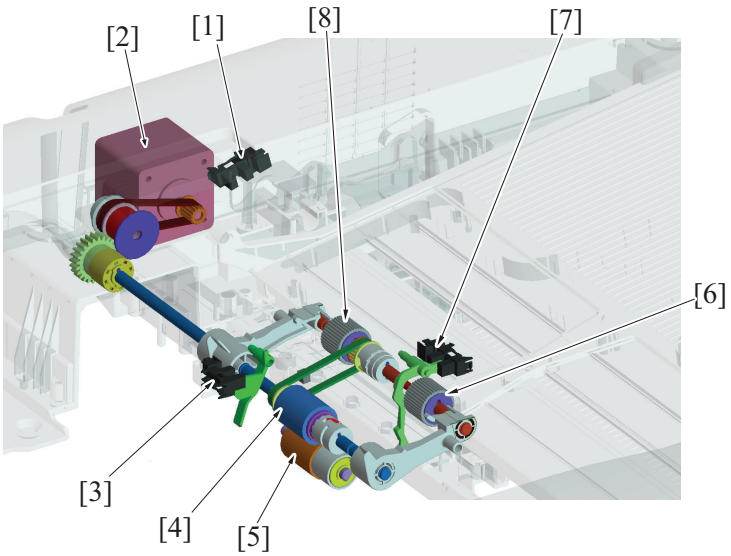


| | | | |
|---|---|---|---|
| [1] | Upper door sensor (PS14) | [2] | Document feed motor (M2) |
| [3] | After separate sensor (PS2) | [4] | Document feed roller |
| [5] | Document separation roller | [6] | Document pick-up roller |
| [7] | Document empty sensor (PS1) | [8] | Document pick-up roller |

- The document feed section consists of the document pick-up roller, document feed roller, as well as the document separation roller, and is directly driven by the document feed motor.
- When the start key is pressed, the document pick-up roller lowers to press the original, and the original is taken up and fed in. The original is transported to the registration roller by the document pick-up roller and document feed roller.
- After the take-up and feeding sequence, the document feed motor is rotated backward, which raises the document pick-up roller.

## 2.2 Registration drive

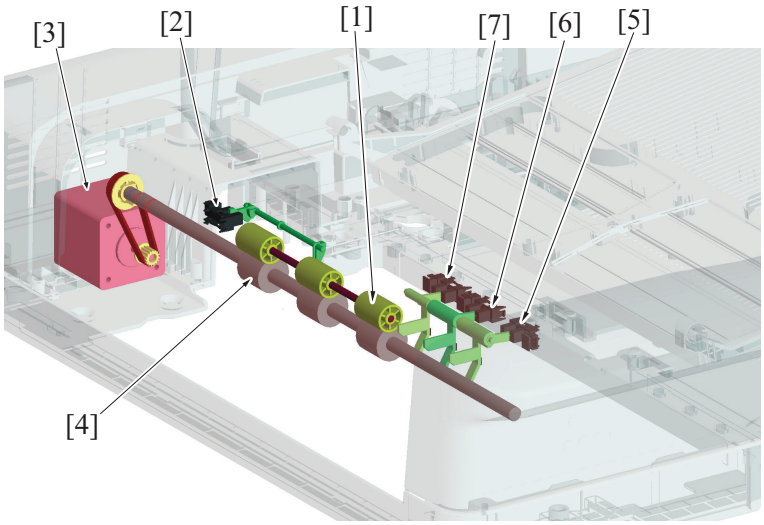


| | | | |
|---|---|---|---|
| [1] | Registration roll | [2] | Registration sensor (PS3) |
| [3] | Registration motor (M3) | [4] | Registration roller |
| [5] | Mixed original sensor/3 (PS12) | [6] | Mixed original sensor/2 (PS11) |
| [7] | Mixed original sensor/1 (PS10) | - | - |

- Timing at which to start transporting the original is controlled using the registration motor.
- The original is pressed against the registration roller and registration roll. This forms a loop in the original to thereby correct any skew in the original.
- Mixed original sensors/1, 2/, and 3/ detect width of the originals in the mixed original mode.

## 2.3 Document reading drive

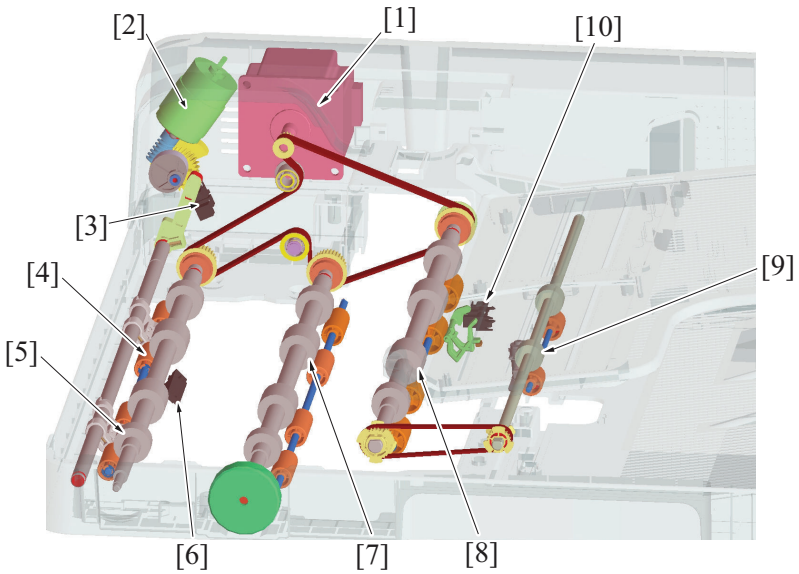


| | | | |
|---|---|---|---|
| [1] | Document reading motor (M1) | [2] | Reading roller release motor (M4) |
| [3] | Reading roll position sensor (PS4) | [4] | Document reading roll |
| [5] | Document reading roller/1 | [6] | Document reading sensor (PS6) |
| [7] | Document reading roller/2 | [8] | Document reading roller/3 |
| [9] | Document exit roller | [10] | Document exit sensor (PS5) |

- The document reading motor drives the document reading section and document exit section.
- The document reading roll is equipped with a pressure/release mechanism. The pressure is released when the trailing edge of the original moves past the roller.

## 2.4 Document reading glass / CIS glass cleaning drive

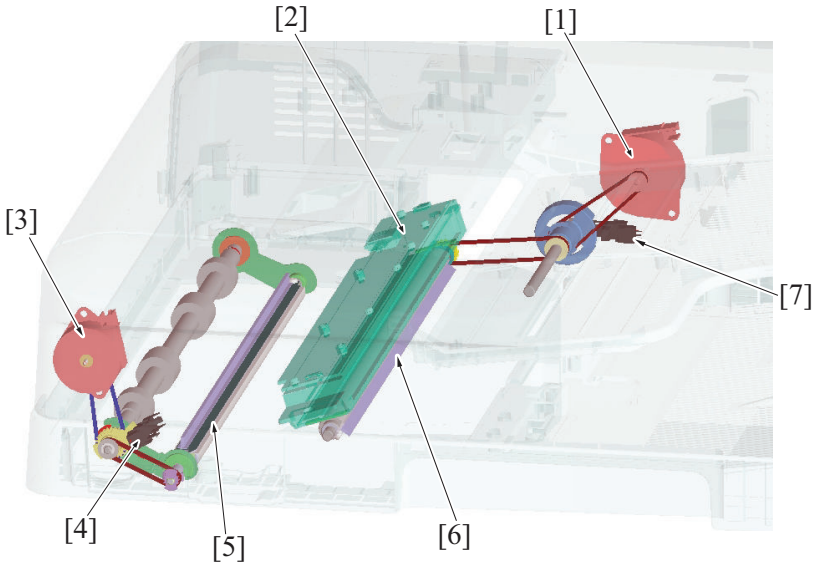


| | | | |
|---|---|---|---|
| [1] | CIS cleaning motor (M5) | [2] | CIS module (CIS) |
| [3] | Document reading glass cleaning motor (M6) | [4] | Document reading glass cleaning sensor (PS13) |
| [5] | Document reading glass cleaning brush | [6] | CIS glass cleaning brush |
| [7] | CIS cleaning sensor (PS7) | - | - |

- The document reading glass cleaning brush is rotated by the document reading glass cleaning motor and the glass surface is thereby cleaned.
- The CIS cleaning brush is rotated by the CIS cleaning motor and the CIS surface is thereby cleaned.
- The position of the cleaning brush is detected by the document reading glass cleaning sensor and the CIS cleaning sensor.

# 3. OPERATION

## 3.1 Document feed section

### 3.1.1 Document set/empty detection

- When an original is loaded on the document feed tray, the document empty sensor detects that there is original.
- If no original is loaded when the document pick-up roller is in the standby position, the actuator blocks the document empty sensor and it is detected that no original is loaded.
- When an original is loaded on the document feed tray, the leading edge of the original pushes the actuator so that the document empty sensor is unblocked. It is detected that an original is loaded.
- When all pages of the original are fed in, the document empty sensor detects that there is no original on the document feed tray.

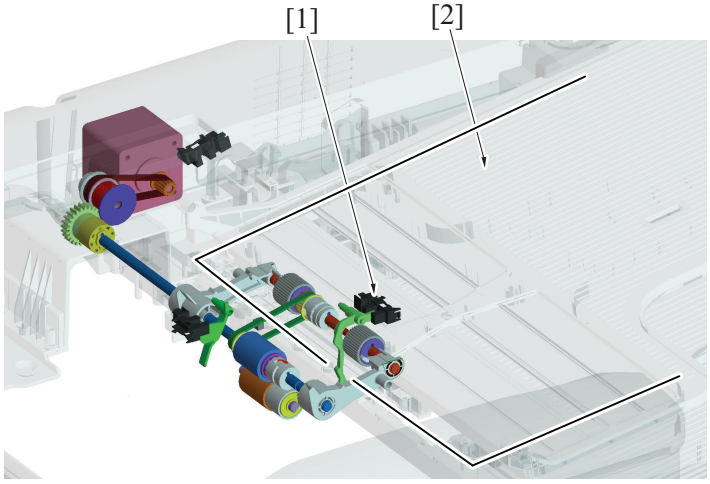


| | | | |
|---|---|---|---|
| [1] | Document empty sensor (PS1) | [2] | Original |

### 3.1.2 Document size detection mechanism

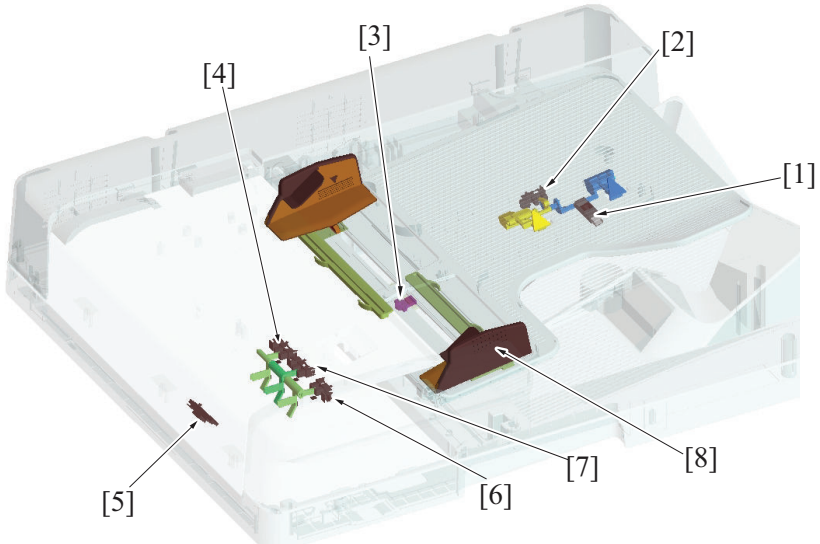


| | | | |
|---|---|---|---|
| [1] | Document length sensor/2 (PS9) | [2] | Document length sensor/1 (PS8) |
| [3] | Document width sensor (VR1) | [4] | Mixed original sensor/1 (PS10) |
| [5] | Document reading sensor (PS6) | [6] | Mixed original sensor/3 (PS12) |
| [7] | Mixed original sensor/2 (PS11) | [8] | Document width guide |

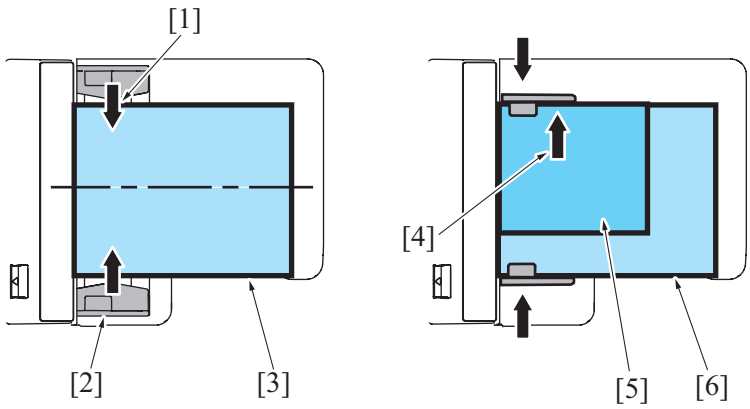


| | | | |
|---|---|---|---|
| [1] | Adjust the document width guide plates (center alignment) | [2] | Document width guide plates |
| [3] | Original (standard mode) | [4] | Align the original with narrow width with the rear side of the document width guide plates (rear alignment) |
| [5] | Original with narrow width (mixed original mode) | [6] | Original with wide width (mixed original mode) |

### (1) Detecting the width of the original

- The width of the original is set on the document feed tray will be detected by the document width sensor.
- A variable resistor is incorporated in the document width sensor. Its resistance value varies in association with the movement of the document width guide.
- The original is to be loaded in the document feed tray by aligning it with reference to the center of the document feed tray in the standard mode. In the mixed original mode, the original is aligned to the rear side.

### (2) Detecting the length of the original

- The length of the original is set on the document feed tray will be detected by the document length sensors/1 and /2.
- The document length sensor/1 is a transmission type, while document length sensor/2 is a reflection type. The document length sensor/1 is detected by two actuators, that is, actuator/1 and actuator/2.
- When the document feed tray is not loaded with any originals, document length sensor/1 is blocked. When an original is loaded and only actuator/1 is pressed, document length sensor/1 is unblocked. When both actuator/1 and actuator/2 are pressed, a blocked document length sensor/1 is detected by actuator/2.

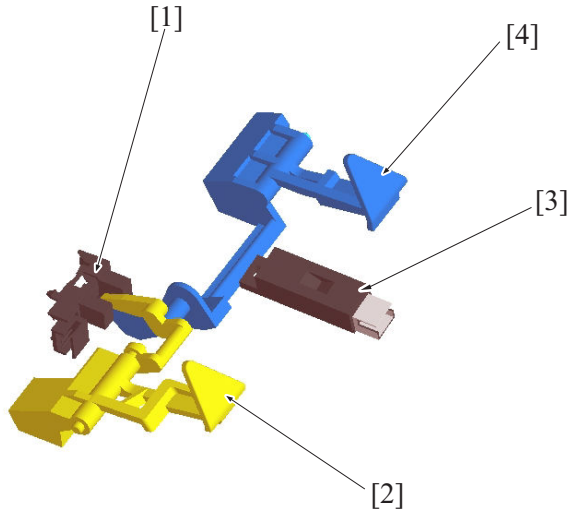


| | | | |
|---|---|---|---|
| [1] | Document length sensor/1 (PS8) | [2] | Actuator/1 |
| [3] | Document length sensor/2 (PS9) | [4] | Actuator/2 |

### (3) Detecting the width of the original (in the mixed original/AMS mode)

- In the mixed original/AMS mode, no width is determined on the document feed tray; rather, the width is detected while the originals are being fed. Three mixed original sensors are disposed at positions immediately after the document feed section, functioning to detect the width of the original.

### (4) Detecting the length of the original (in the mixed original/AMS mode)

- In the mixed original/AMS mode, no length is determined on the document feed tray; rather, the length of the original is calculated and determined based on the period of time during which the document reading sensor remains activated.

### (5) Document feed tray size detection

- The original size is determined by the combination of the results of detection made of the width and length of the original.

| | | | | | |
|---|---|---|---|---|---|
| Document length sensor/2 (PS9) | | OFF | OFF | Reflector | Reflector |
| Document length sensor/1 (PS8) | | Blocked | Unblocked | Unblocked | Blocked |
| Document width sensor (VR1) | 114.5 | Postcard | B5S | A4S | A3 |
| | 136 | B6S | B5S | A4S | A3 |
| | 163 | A5S | B5S | A4S | A3 |
| | 190.6 | B5S | B5S | A4S | A3 |
| | 236.5 | A5 | Letter S | A4S | Foolscap |
| | 266.2 | B5 | B4 | B4 | B4 |
| | 286.2 | Letter | Ledger | Ledger | Ledger |
| | (307) | A4 | A3 | A3 | A3 |

### 3.1.3 Pick-up roller up/down control

#### (1) Up control

- When a job is completed, the document feed motor starts rotating backward. Then, the swing arm mounted on the same shaft as the document feed roller is rotated backward to thereby raise the document pick-up roller to the standby position.
- The document pick-up roller is fixed at the raised position by a torque limiter of the paper drive section.
- When the swing arm is raised to the standby position, the document stopper is lowered by its own weight and fixed by the lock pawl of the swing arm. The document stopper is unlocked when the swing arm lowers.
- The document stopper has two functions: one, to align the leading edges of the originals loaded in the standby state; and, two, to prevent the leading edge of the original from advancing over the pick-up position into the feed section.

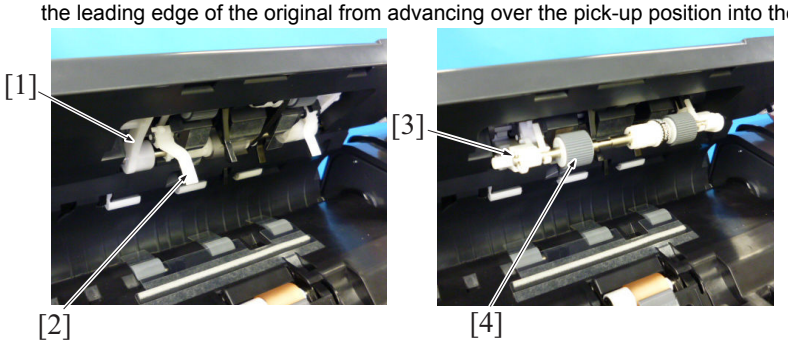


| | | | |
|---|---|---|---|
| [1] | Swing arm (standby position) | [2] | Document stopper |
| [3] | Swing arm (feed position) | [4] | Document pick-up roller |

#### (2) Down control

- When the start key is pressed, the document feed motor starts rotating forward. The rotation shaft of the swing arm mounted on the same shaft as the document feed roller is rotated forward, so that the document pick-up roller is lowered to the feed position.
- The document stopper is unlocked when the swing arm lowers.

### 3.1.4 Document feed/separation control

- When the start key is pressed, the document feed motor starts rotating forward, so that the document feed roller rotates forward.
- The rotation shaft of the swing arm mounted on the same shaft as the document feed roller is rotated forward, so that the document pick-up roller is lowered to the feed position. The document pick-up roller is rotated by a drive belt to thereby feed the original onto the document feed roller.

#### (1) Separation/feed operation

1. The document separation roller is pressed up against, and driven by, the document feed roller. A torque limiter is mounted on the shaft of the document separation roller.
2. The acting pressure of the document feed roller/document separation roller/torque limiter serves as the limit torque for preventing double feed.
3. When there is no original or only one sheet of original between the document separation roller and the document feed roller, the limit torque is exceeded and the document separation roller follows the rotation of the document feed roller.
4. If there are two or more sheets of original between the document separation roller and the document feed roller, the limit torque is greater than the friction force of the original, so that the document separation roller stops rotating.
5. Because of the stationary document separation roller, the lower sheet of original in contact with the document separation roller is not fed in, so that the first sheet of original is original separated from the second sheet of original.

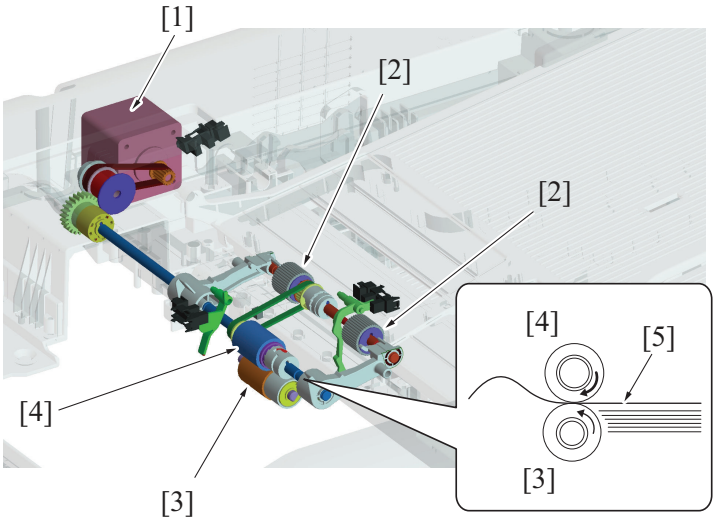


| | | | |
|---|---|---|---|
| [1] | Document feed motor (M2) | [2] | Document pick-up roller |
| [3] | Document separation roller | [4] | Document feed roller |
| [5] | Original | - | - |

### (2) Periodically replaced parts

- The document pick-up roller, document feed roller, and document separation roller are periodically replaced parts.
- At replacing the rollers, the paper feed assembly (document pick-up roller + document feed roller) and document separation roller must be replaced at the same time.
- Otherwise, the document pick-up roller, document feed roller, and document separation roller must be replaced at the same time.
- None of the document pick-up rollers, document feed rollers, and document separation roller are provided with a new article detection mechanism. When the three rollers are replaced with new ones, the “ADF Feed” counter must be reset to zero using “Counter / Life” of the Service Mode.
- The number of times the DF has been subjected to paper feed operations can be checked with the “ADF Feed” counter of the Service Mode.

| | |
|---|---|
| Periodical replacement cycle | Paper feed operations 200,000 times |

- For details of the applicable replacement procedures for the document pick-up roller, document feed roller, and document separation roller and the Service Mode, see “F.8.1.3 Replacing the paper feed assy.” and “F.8.1.5 Replacing the separation roller assy.”

#### (a) Paper feed roller assembly

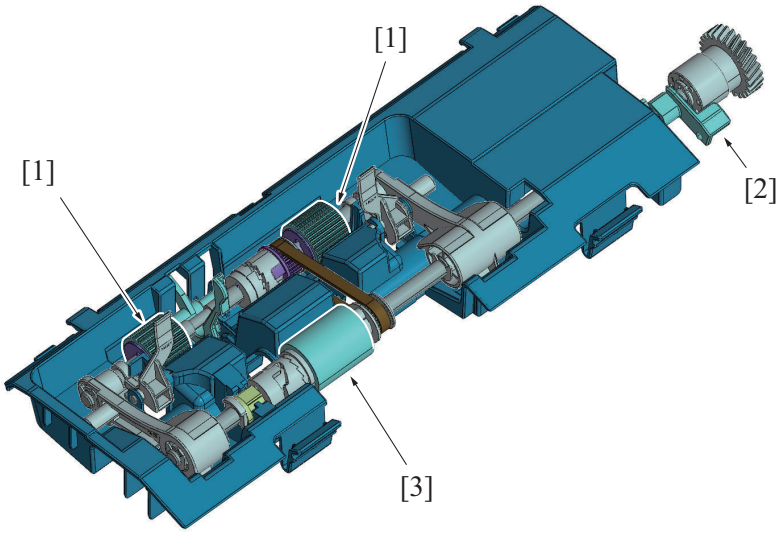


| | | | |
|---|---|---|---|
| [1] | Document pick-up roller | [2] | Paper feed assembly lock lever |
| [3] | Document feed roller | - | - |

**(b) Document feed roller / Document pick-up roller**

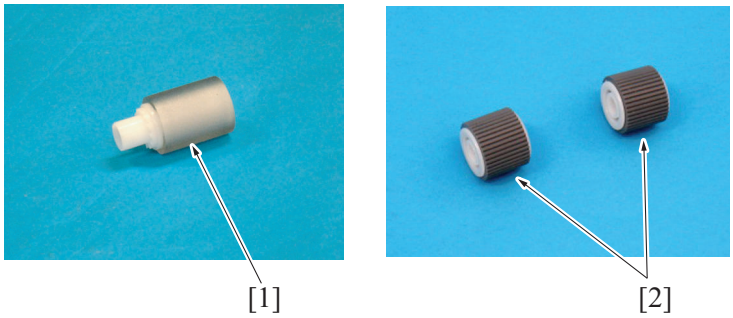


| | | | |
|---|---|---|---|
| [1] | Document feed roller | [2] | Document pick-up roller |

**(c) Document separation roller**

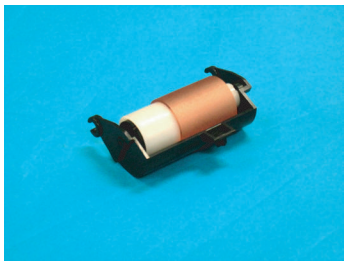

### 3.1.5 Document separation roller pressure switching mechanism

- As a solution to misfeed problems when they occur, the pressure of the document separation roller can be changed as necessary.
- Inserting a spacer into a space below the spring that applies pressure to the document separation roller will increase the pressure.
- The pressure may be set in two steps selectable according to the direction in which the spacer is inserted.
- The spacer is disposed beside the document separation roller.
- For details, see "I.13.1.4 Adjusting the pressure of the separation roller".

## 3.2 Document registration section

### 3.2.1 Document registration outline

- The registration motor provides the drive for the registration roller.
- The original will create a loop between the document feed roller and the registration roller when the original is being conveyed in order to correct the skew.

### 3.2.2 Document registration loop formation process

1. The registration sensor detects the leading edge of the original.
2. The registration roller remains stationary.
3. Because the document feed roller continues rotating to feed the original, a loop is formed at the leading edge of the original.
4. The loop corrects skew in the original.
5. The registration roller is started to rotate to transport the original.

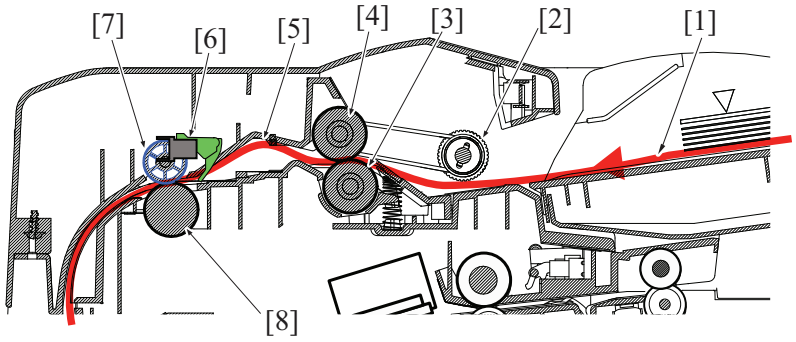


| | | | |
|---|---|---|---|
| [1] | Original | [2] | Document pick-up roller |
| [3] | Document separation roller | [4] | Document feed roller |
| [5] | Loop formation | [6] | Registration sensor (PS3) |
| [7] | Registration roll | [8] | Registration roller |

## 3.3 1-sided document reading section

### 3.3.1 Document reading section

- The document reading motor provides the drive for document reading roller/1/2/3, and the document exit roller.
- The original transported from the document registration section will be transported to the document exit section by document reading roller/1/2/3, and the document exit roller.

- When the leading edge of the original moves past the document reading roller/1, the document reading sensor (reflector type) disposed downstream of the roller detects the original. The length of the original is also detected based on the period of time during which the sensor remains activated.

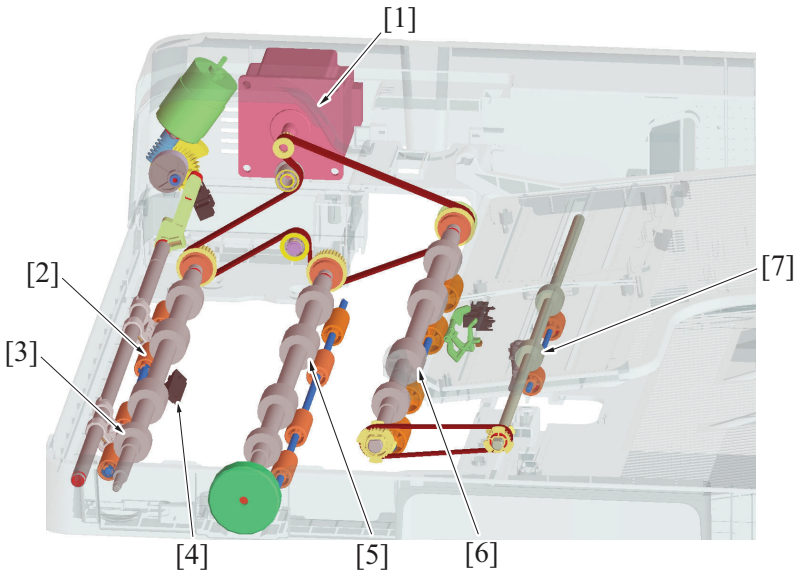


| | | | |
|---|---|---|---|
| [1] | Document reading motor (M1) | [2] | Document reading roll |
| [3] | Document reading roller/1 | [4] | Document reading sensor (PS6) |
| [5] | Document reading roller/2 | [6] | Document reading roller/3 |
| [7] | Document exit roller | - | - |

### 3.3.2 Document reading roll pressure/release control

- When the trailing edge of the original moves past document reading roller/1, document reading roller/1 acts to push the original, so that the document transport speed increases instantaneously. This results in an image being read unevenly. (Fluctuations in the document transport speed)
  To prevent this problem from occurring, the document reading roll is released using the reading roller release motor. When the document reading roll is released, no thrust force is transmitted to the original.
- After the document reading roll is released, the original is transported only by rollers locating downstream of a reading position.

#### (1) Pressure/release operation

- When the reading roller release motor is energized, the pressure/release gear is rotated and the cam mounted on the same shaft as the pressure/release gear is rotated.
- Then, the cam pushes down the rotation shaft of the document reading roll, so that the document reading roll is released from the document reading roller.
- The pressure/release gear is provided with a semi-circular light blocking plate. When the gear rotates a half turn, the reading roll position sensor is unblocked and blocked. Then, a condition is detected in which the document reading roll is released. (Blocked: released; unblocked: pressed)

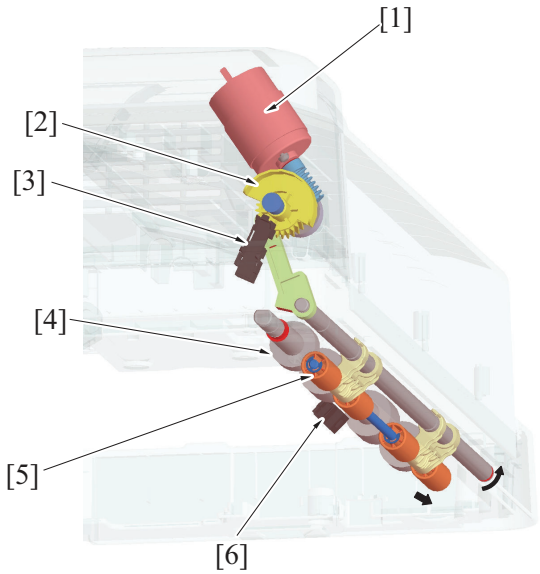


| | | | |
|---|---|---|---|
| [1] | Reading roller release motor (M4) | [2] | Pressure/release gear |
| [3] | Reading roll position sensor (PS4) | [4] | Document reading roller/1 |
| [5] | Document reading roll | [6] | Document reading sensor (PS6) |

### 3.3.3 Document reading front guide

- Open the document reading guide to free documents that are trapped between the document reading roller/1 and the document reading roll.
- Open the original reading guide to clean the original reading roller/1 and the original reading sensor flock fabric.
- A spring is mounted to the document reading guide, therefore holding it by one hand is required at the time of handling a document. After you finished handling the document, release the hand holding the guide and return the guide to its normal position.
- No open-close sensor is mounted to the document reading guide.

Scanner side-view drawing

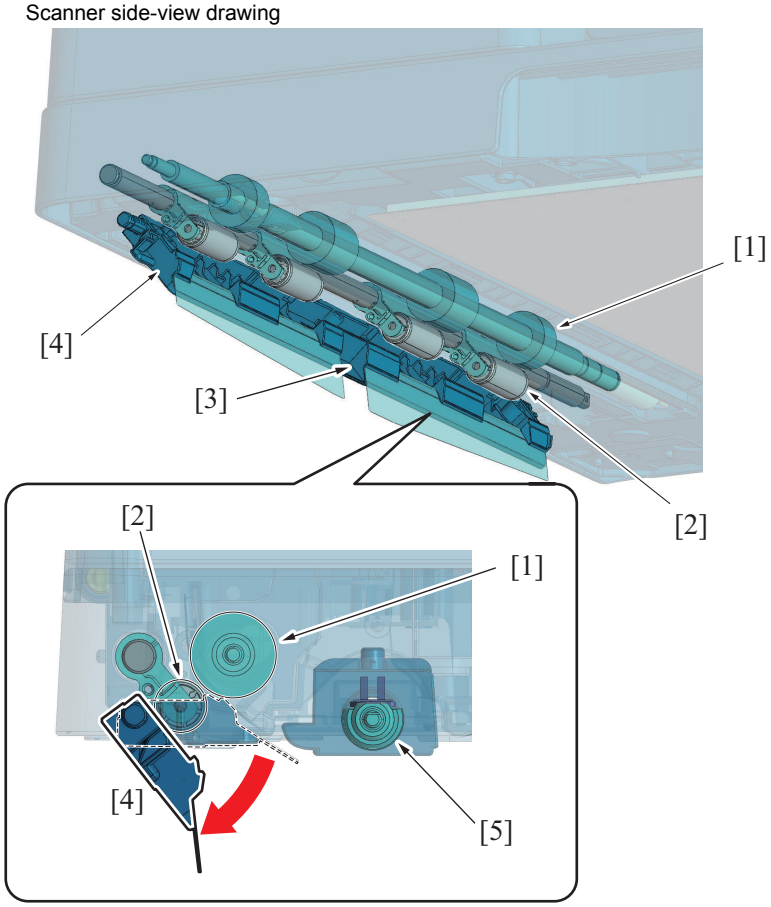


| | | | |
|---|---|---|---|
| [1] | Document reading guide | [2] | Document reading roller/1 |
| [3] | Flock fabric | [4] | Document reading roll |
| [5] | Document reading glass cleaning roller | - | - |

### 3.3.4 Document reading glass cleaning mechanism

#### (1) DF original glass cleaning

- A line can occur in the image read from the original if the DF original glass is contaminated with dust or dirt. The DF original glass cleaning mechanism prevents this fault from occurring.
- A half face of the document reading glass cleaning roller is provided with the document reading glass cleaning brush. While the original is being read, the document reading glass cleaning brush faces up. When the DF original glass is to be cleaned, the document reading glass cleaning roller rotates, so that the document reading glass cleaning brush faces the DF original glass.
- The document reading glass cleaning roller rotates to remove dust sticking to the DF original glass.
- The document reading glass cleaning roller is rotated by the document reading glass cleaning motor. During cleaning, the document reading glass cleaning roller rotates forward (counterclockwise in the illustration) and, when the job is completed, it rotates backward (clockwise in the illustration).
- The drive coupling gear is provided with a light blocking plate. As the gear rotates, the document reading glass cleaning sensor is unblocked and blocked. This detects the document reading glass cleaning brush at its home position. (Unblocked: original reading position; Blocked: home position)

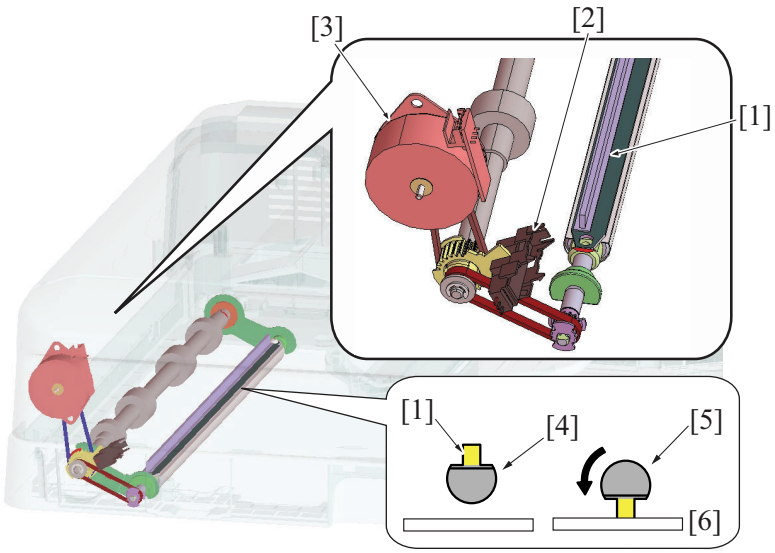


| | | | |
|---|---|---|---|
| [1] | Document reading glass cleaning brush | [2] | Document reading glass cleaning sensor (PS13) |
| [3] | Document reading glass cleaning motor (M6) | [4] | Document reading glass cleaning roller (home position) |
| [5] | Document reading glass cleaning roller (cleaning position) | [6] | DF original glass |

### (2) DF original glass cleaning operation

| Condition | | Cleaning operation |
|---|---|---|
| Predrive | Power ON | Rotates the document reading glass cleaning brush one complete turn to check for its correct operation. (forward rotation) |
| | Exiting from sleep | |
| Start key ON | Before starting reading | Rotates the document reading glass cleaning brush one complete turn to perform cleaning. (forward rotation: default setting) |
| | During reading | Rotates the document reading glass cleaning brush one complete turn to perform cleaning for every two originals during continuous reading of originals. (forward rotation) |
| | | Rotates the document reading glass cleaning brush three complete turns to perform cleaning for each original during continuous reading of originals, if [Original Settings] -> [Despeckle] *1 is selected. (forward rotation)<br>Because the document reading glass cleaning brush is rotated three complete turns to perform the cleaning, however, the original-to-original distance is widened than at normal timing. This results in reduced productivity in reading the originals. |
| | | No original glass cleaning sequence is performed between originals during continuous reading of originals, if [System2] -> [ADF Scan Glass Contamin. Set.] -> [Feed Cleaning Settings] -> [0] *2 is selected in the Service Mode. |
| | After completing reading last original | The document reading glass cleaning brush tends to curl if repeatedly operated in one direction only, resulting in poor cleaning performance. To straighten the brush, it is rotated one complete turn in the backward direction when reading of the last original is completed. (backward rotation) |

***1: Despeckle mode setting screen**

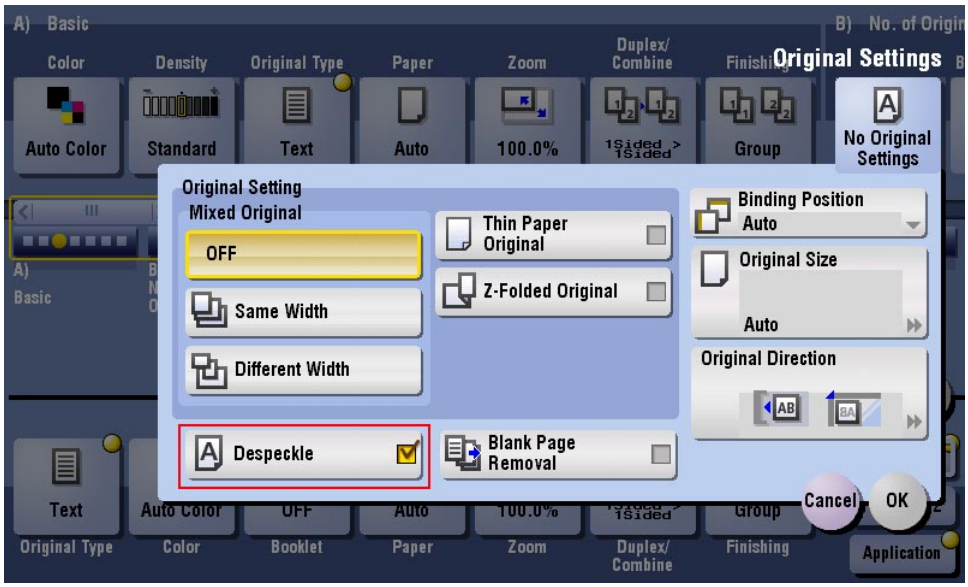


***2: Feed cleaning settings screen**

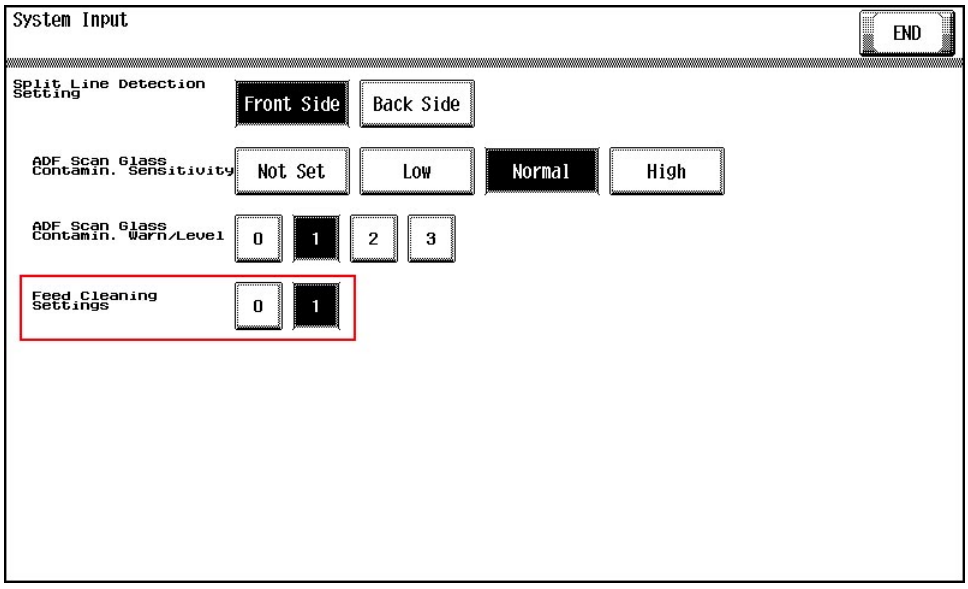


## 3.4 2-sided document reading section

### 3.4.1 CIS original reading mechanism

- The back side of the original is read by the CIS (contact image sensor) module. The image data read by the CIS is transferred to the main body.
- The CIS original reading section consists of the CIS module and CIS power supply.
- The light source of CIS module has used LED.

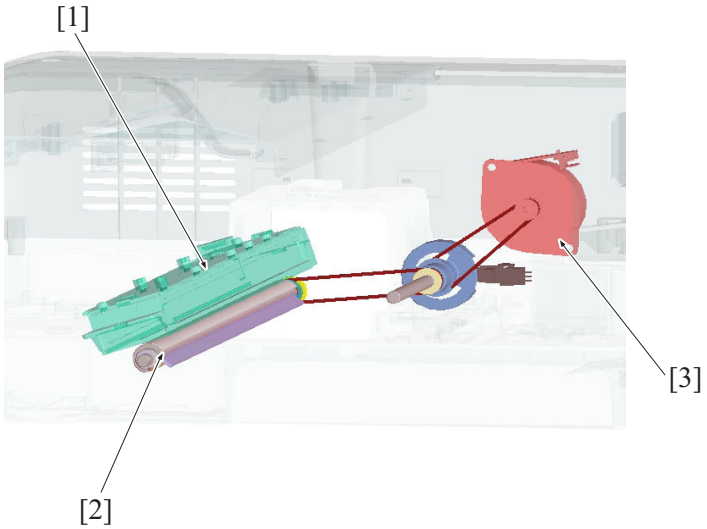


| | | | |
|---|---|---|---|
| [1] | CIS module (CIS) | [2] | Cleaning brush |
| [3] | CIS cleaning motor (M5) | - | - |

- A cleaning brush to which a white plate is affixed is disposed on the side opposite the CIS module.
- “Document passage” is performed at the home position.
- “Shading correction”, “gain adjustment”, and “ADF Scan Glass Contamin. Sensitivity” are made using the shading surface.

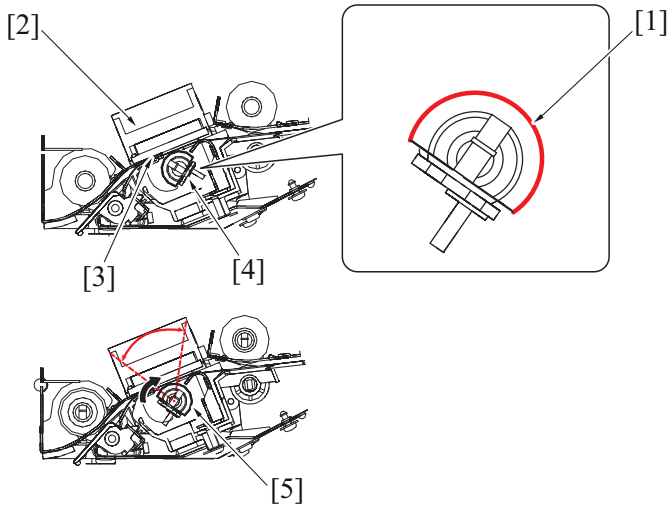


| | | | |
|---|---|---|---|
| [1] | White plate affixed | [2] | CIS module (CIS) |
| [3] | CIS glass | [4] | Cleaning brush (Home position) |
| [5] | Cleaning brush (Shading correction surface) | - | - |

### 3.4.2 CIS control when power is turned ON

1. The LEDs of CIS are turned ON.
2. The cleaning brush is detected at its home position.
3. The cleaning brush is rotated and brought to a stop at the gain adjustment position.
   The gain adjustment is made twice with the cleaning brush at that position.
4. After the adjustments, the LEDs are turned OFF.
5. The cleaning brush is rotated and brought to a stop at the home position.

* The same control is performed when the main body exits from the sleep mode.

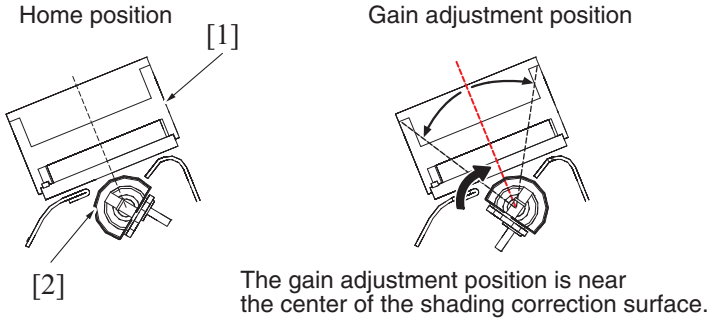


| | | | |
|---|---|---|---|
| [1] | CIS module (CIS) | [2] | Cleaning brush |

### 3.4.3 CIS control when the document is loaded

1. The cleaning brush is detected at its home position.
2. The LEDs of CIS are turned ON.
3. The cleaning brush is rotated one complete turn.
4. The LEDs are turned OFF.
5. The cleaning brush is rotated and brought to a stop at the home position.

**NOTE**

- **No operation is performed when the document is loaded if the following function is selected using the service mode: [System 2] -> [ADF Scan Glass Contamin. Set.] -> [Back Side] -> [ADF Scan Glass Contamin. Sensitivity] -> [Not Set].**

### 3.4.4 CIS control when the start key is pressed

- This control is performed only in the 2-sided original reading mode.

#### (1) Before a print cycle / back side reading

1. The cleaning brush is detected at its home position.
2. The LEDs of CIS are turned ON.
3. The cleaning brush is rotated three complete turns.
   The cleaning brush cleans the CIS glass during its first turn.
   The cleaning brush uses the shading correction surface to perform the shading correction during its second and third turn.
4. With the LEDs ON, the cleaning brush is brought to a stop at its home position (waiting for the original).
5. The back side of the original is read as the original moves over the CIS.

#### (2) During a print cycle (operation between originals after reading)

The brush cleaning operation is normally performed each time the original is read.
If a print cycle produces a large number of printed pages continuously, however, either the cleaning operation or the shading correction operation is performed.
The shading correction operation is performed at predetermined intervals during a multiprint cycle in order to maintain an appropriate shading correction value.

##### (a) Cleaning operation

1. The cleaning brush is rotated one complete turn.
   (The cleaning brush normally makes one turn, but makes three turns in the despeckle mode.)
2. With the LEDs ON, the cleaning brush is brought to a stop at its home position (waiting for the original).

##### (b) Shading correction operation

1. The cleaning brush is rotated three complete turns.
   The cleaning brush cleans the CIS glass during its first turn.
   The cleaning brush uses the shading correction surface to perform the shading correction during its second and third turn. The shading correction is performed (a total of twice).
2. With the LEDs ON, the cleaning brush is brought to a stop at its home position (waiting for the original).

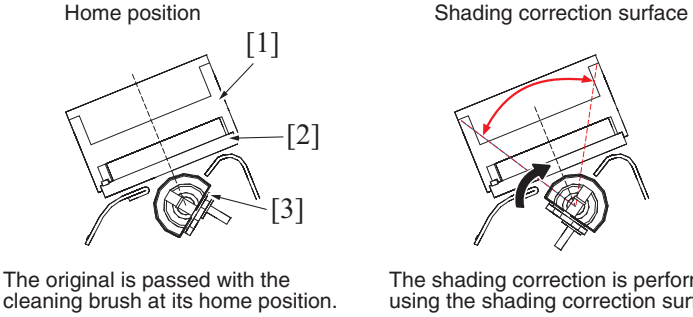


| | | | |
|---|---|---|---|
| [1] | CIS module (CIS) | [2] | CIS glass |
| [3] | Cleaning brush | - | - |

### (c) After the print cycle

1. After the reading sequence, the LEDs are turned OFF.
2. The cleaning brush is turned backward (to tame the brush).
3. The cleaning brush is brought to a stop when its home position is detected.
4. The cleaning brush perform “ADF Scan Glass Contamin. Sensitivity”.
   - The LEDs are turned ON. The cleaning brush is rotated four complete turns.
   - The cleaning brush cleans the CIS glass during its first turn.
   - The cleaning brush uses the shading correction surface to perform the shading correction during its second and third turn. The shading correction is performed (a total of twice).
   - The cleaning brush uses the shading correction surface to perform “ADF Scan Glass Contamin. Sensitivity” during its fourth turn.
   - The cleaning brush is brought to a stop at its home position.
   - The LEDs are turned OFF.

**NOTE**

- **Steps of 4 is not performed if [Service Mode] -> [System 2] -> [ADF Scan Glass Contamin. Set.] -> [Back Side] -> [ADF Scan Glass Contamin. Sensitivity] -> [Not Set] is selected**

## 3.4.5 CIS glass contamination prevention control

### (1) CIS glass cleaning

- The CIS glass is cleaned only when two sides of the original are to be read.
- When the back side cleaning motor is energized, the cleaning brush is rotated to remove dust and dirt from the surface of the CIS glass.
- Cleaning of the front side takes place at timing different from that of cleaning of the back side and the cleaning of the back side sources its power drive differently from the front side.
- The cleaning brush at its home position is detected by the CIS cleaning sensor.
- For details, see “PB.3.4.4 CIS control when the start key is pressed”.

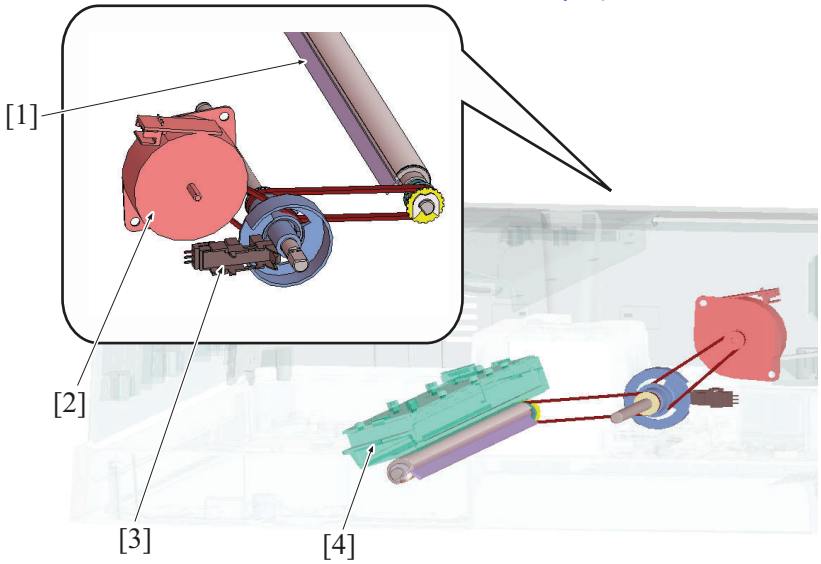


| | | | |
|---|---|---|---|
| [1] | Cleaning brush | [2] | CIS cleaning motor (M5) |
| [3] | CIS cleaning sensor (PS7) | [4] | CIS module (CIS) |

## 3.4.6 CIS cover

- During a misfeed clearing procedure, the CIS cover can be opened by releasing the lever.
- The CIS cover sensor is unblocked when the lever is released.

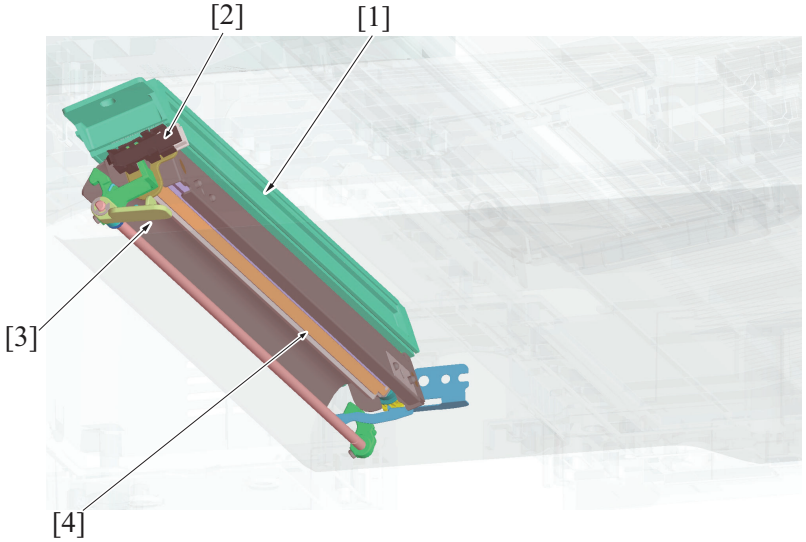


| | | | |
|---|---|---|---|
| [1] | CIS module (CIS) | [2] | CIS cover sensor (PS15) |

| | | | |
|---|---|---|---|
| [3] | Lever | [4] | CIS cleaning roller |

## 3.5 Docuemnt exit section

### 3.5.1 Document exit mechanism

- The document reading motor provides the drive for the document exit roller. (the same drive source as that for the document reading section)
- As the document exit roller rotates forward, the original fed off from the document reading section is fed into the document exit tray.
- The original is exited to be detected by the document exit sensor.

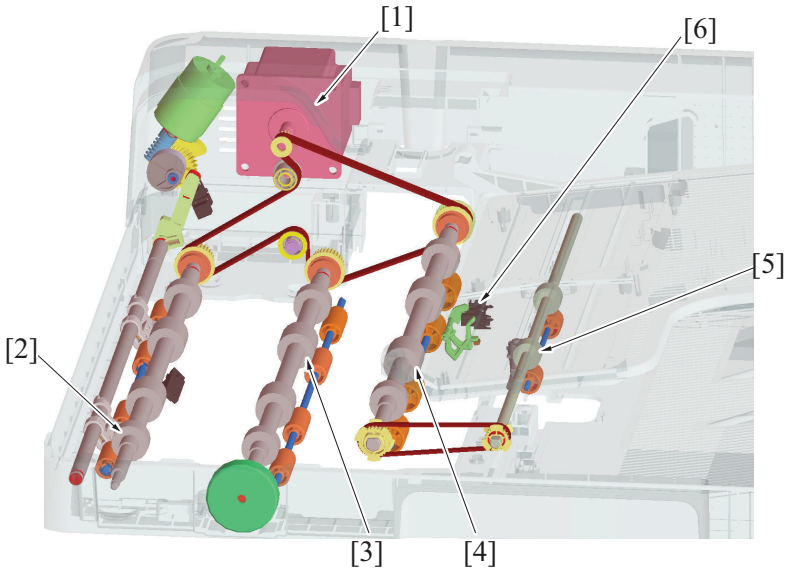


| | | | |
|---|---|---|---|
| [1] | Document reading motor (M1) | [2] | Document reading roller/1 |
| [3] | Document reading roller/2 | [4] | Document reading roller/3 |
| [5] | Document exit roller | [6] | Document exit sensor (PS5) |

### 3.5.2 Faxed document stamp function

- Mounting the optional “Stamp unit SP-501” allows a stamp to be placed on a faxed document.
- The stamp solenoid located upstream of the document exit roller is energized when the original is about to be fed out and the stamp mounted on the solenoid plunger is pressed against the surface of the original. This places a faxed mark (+) on the surface of the original.
- This function is enabled when “System2/Stamp/Set*1 (default setting: Unset)” is turned ON using the Service Mode and the user selects “Application/TX Stamp*2 (default setting: OFF)” on the “Scan/Fax” screen.
- This function is not used for “Copy” or “Scan”.

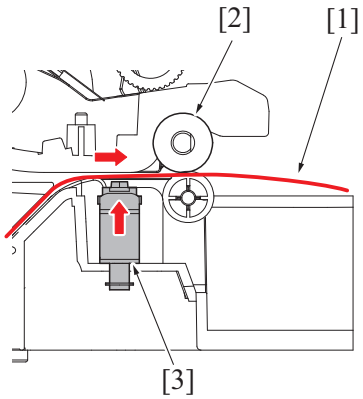


| | | | |
|---|---|---|---|
| [1] | Original | [2] | Document exit roller |
| [3] | Stamp unit (SP-501) | - | - |

***1: Stamp mounting setting screen**

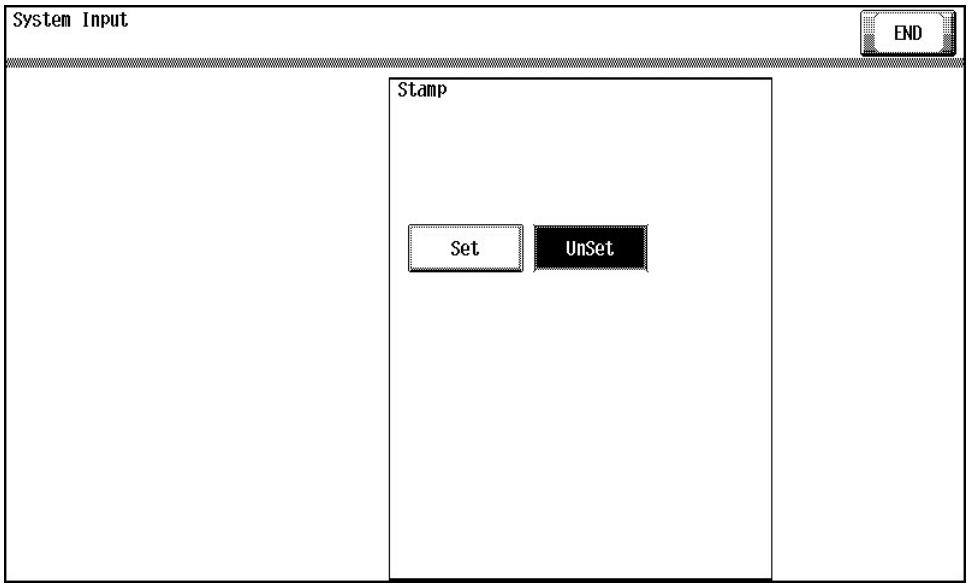


***2: TX Stamp setting screen**




## 3.6 Paper path operation

Reading of the back side of the original by the CIS is not done in the 1-sided mode. All other paper feed operations in the 1-sided mode are the same as those in the 2-sided mode.

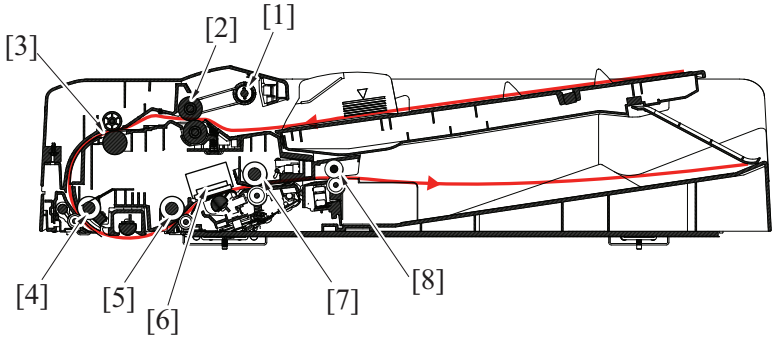


| | | | |
|---|---|---|---|
| [1] | Document pick-up roller | [2] | Document feed roller |
| [3] | Registration roller | [4] | Document reading roller/1 |
| [5] | Document reading roller/2 | [6] | CIS module (CIS) |
| [7] | Document reading roller/3 | [8] | Document exit roller |

1. When the original is set, the document empty sensor detects the leading edge of the original.
2. Pressing the start key will lower the document pick-up roller and the document reading roller/1 will be pressed.
3. The document feed motor is energized, and the document pick-up roller and document feed roller are rotated to start feeding the first original.
4. When the registration sensor detects the leading edge of the original, a loop is formed in the original.

5. After the loop has been formed in the original, the registration motor is energized. The drive of the registration motor rotates the registration roller, so that the original is transported onto the reading section.
6. The document reading motor is energized after the lapse of a predetermined period of time after the registration motor has been energized. The drive of the document reading motor rotates document reading roller/1, document reading roller/2, document reading roller/3, and document exit roller.
7. After the lapse of a predetermined period of time after the document reading sensor has detected the leading edge of the original, reading of the front side of the original is started by the scanner.
8. The document reading roller/1 is retracted immediately before the trailing edge of the original moves past document reading roller/1. The document reading roller/1 in the retracted position is pressed again as soon as the trailing edge of the original moves past the front side reading position so as to be prepared for the next original.
9. When the leading edge of the original moves past the document reading roller/2, reading of the back side of the original is started by the CIS. (Reading of the back side of the original is done only in the 2-sided mode.)
10. The document reading roller/3 is driven to transport the original onto the document exit section.
11. The document exit roller is driven to feed the original out.
12. The document reading motor is deenergized after the lapse of a predetermined period of time after the trailing edge of the original has deactivated the document exit sensor.

## 3.7 DF open/close detection mechanism

### 3.7.1 Document exchange detection control

- An angle detection mechanism is provided to detect the operation of exchanging originals when the DF is used as the original cover of the main body.
- When the DF is raised to an angle of about 14.5 degrees or more, the detection lever is pushed up by a spring. The angle sensor that has been blocked by the detection lever is now unblocked. It is, as a result, detected that the DF “is raised to an angle of 14.5 degrees or more”.
- When, on the other hand, the DF is lowered to an angle of about 14.5 degrees or less, the detection lever is pushed down. Then, the angle sensor, which has been unblocked, is blocked, so that it is detected that the DF “is lowered to an angle of 14.5 degrees or less”.
- When the DF state undergoes changes from a condition of being fully lowered to a condition of “being raised to an angle of 14.5 degrees or more” and then to a condition of “being lowered to an angle of 14.5 degrees or less”, it is determined that “an original is placed manually on the original glass”. Then the original size detection control will be started.

### 3.7.2 DF open/close detection

- The magnet is installed to detect the open/close status of the DF on the main body side.
- The original cover sensor on the main body will turn ON by the magnet when lowering the DF.

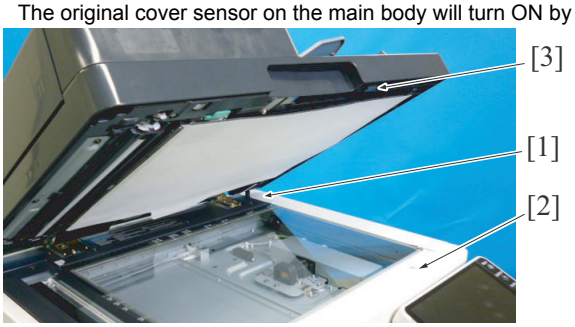


| | | | |
|---|---|---|---|
| [1] | Angle sensor (PS202) | [2] | Original cover sensor (RS201) |
| [3] | Magnet | - | - |

## 3.8 Cooling inside the unit mechanism

- The DF cooling fan motor functions to cool the inside of DF, DF control board, and document feed motor in the DF.
- It discharges heat generated inside the DF out through the exhaust port.

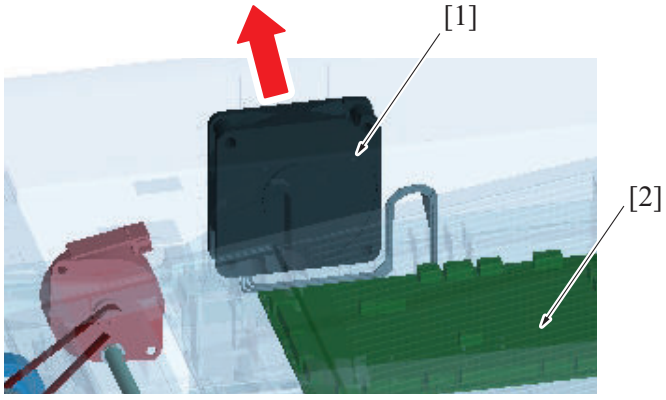


| | | | |
|---|---|---|---|
| [1] | DF cooling fan motor (FM1) | [2] | DF control board (DFCB) |

## 3.9 DF skew adjustment mechanism

### 3.9.1 DF Skew(Front) adjustment mechanism

- The document feeder is installed to the scanner section of the machine and fixed with two hinges.
- The hinge on the right side of the machine is equipped with a DF skew (Front) adjustment mechanism.

- Turn the adjusting screw to move hinges backward or forward. It changes the relative installing position of the machine and DF. Also, it corrects the inclination of the first side image that is scanned using the CCD unit on the scanner section of the machine.

### (1) Hinge on the right side of the machine (front)

- Tighten the hinge fixing screw and turn the adjustment screw to move the hinge forward or backward. (The DF mounting plate is secured to the machine, therefore the hinge moves forward and backward)
- If the hinge moves towards the front side of the machine, the scale that is engraved on the hinge appears. (+ direction)
- If the hinge moves towards the rear side of the machine, the scale that is engraved on the hinge is hidden. (- direction)
- The amount of adjustment is read on a scale. (Default: 4 scales)
- The amount of correction to the hinge can be automatically measured through reading the adjustment chart in "ADF/DFSkew (Front)" of Service Mode.
  See "I.13.1.2 Adjusting front side skew feed on ADF" for details about the "ADF/DFSkew (Front)".

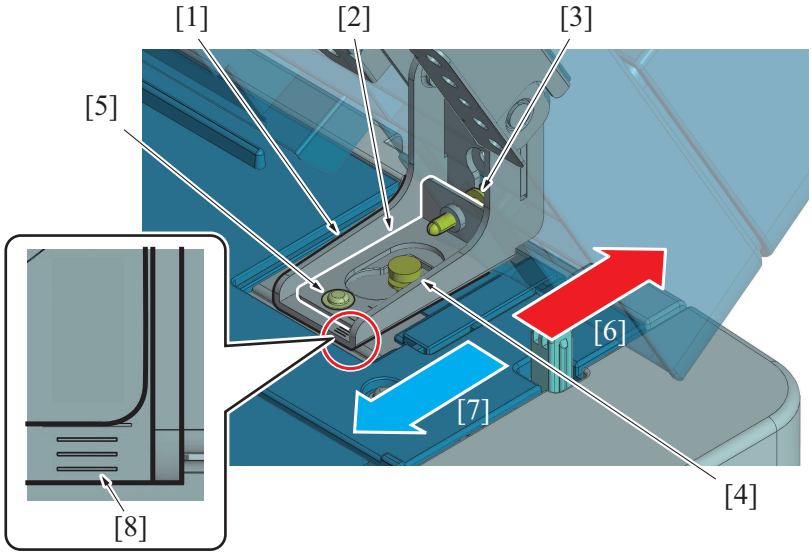


| | | | |
|---|---|---|---|
| [1] | Machine right-side hinge | [2] | DF mounting plate |
| [3] | Adjustment screw | [4] | DF mounting plate fixing screw: Fixes the DF fixing plate to the machine. |
| [5] | Hinge fixing screw: Fixes the hinge to the DF mounting plate. | [6] | Hinge movement direction: - |
| [7] | Hinge movement direction: + | [8] | Adjustment scale |

### (2) Hinge on the right side of the machine (rear)

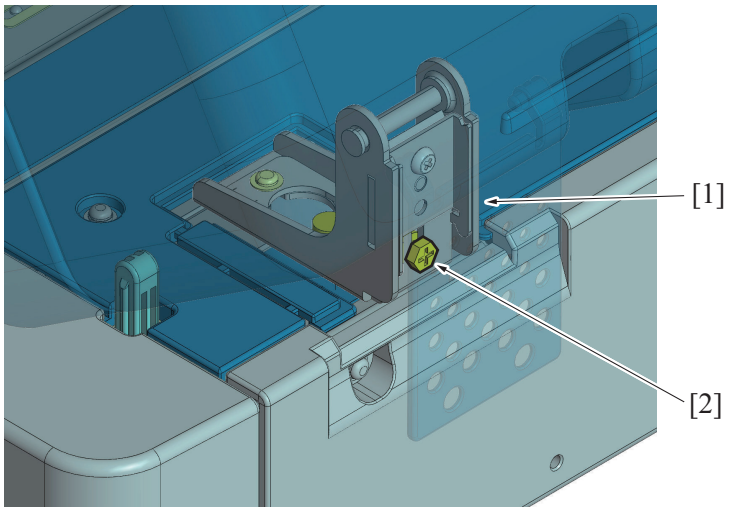


| | | | |
|---|---|---|---|
| [1] | Machine right-side hinge | [2] | Adjustment screw: Turn the adjustment screw to move the hinge backward or forward.<br>• Amount of adjustment + direction: Clockwise turn<br>• Amount of adjustment - direction: Counterclockwise turn |

### (3) Adjustment direction conceptual drawing

Upper view

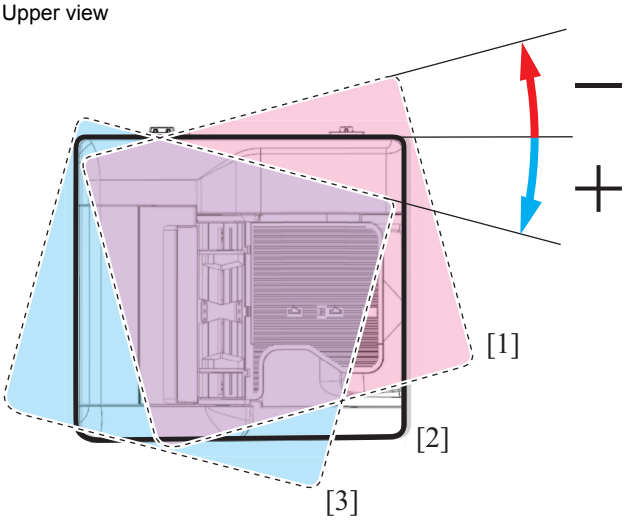


| | | | |
|---|---|---|---|
| [1] | DF movement direction (hinge movement direction): - | [2] | Home position |
| [3] | DF movement direction (hinge movement direction): + | - | - |

## 3.9.2 DF Skew(Back) adjustment mechanism

- The DF skew (Back) adjustment mechanism is provided in the CIS module mounting area on the front DF frame.
- Rotation of the adjusting dial moves the CIS module left-right. It changes the relative position of the DF frame and CIS module. Also, it corrects the inclination of the second-side image that is scanned from the CIS module.

### (1) CIS module mounting area

- Loosen the two CIS adjusting plate fixing screws and turn the adjusting dial to move the adjusting plate left-right. The CIS module moves together.
- Turn the adjusting dial to the right to move the adjusting plate (CIS module) right (+)
- Turn the adjusting dial to the left to move the adjusting plate (CIS module) left (-)
- Read the adjustment amount from the reference line position. (Default: Center)
- The CIS adjusting plate correction amount can be measured automatically through scanning the adjustment chart in Service Mode "ADF/DFSkew (Back)".
  See "I.13.1.3 Adjusting back side skew feed on ADF" for details about the "ADF/DFSkew (Back)".

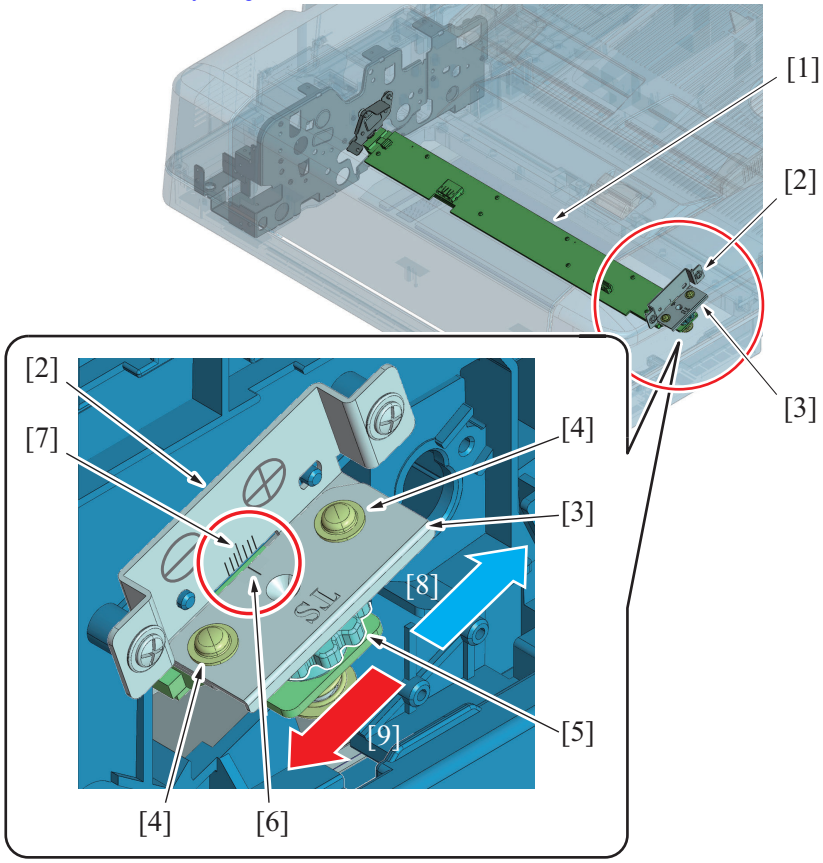


| | | | |
|---|---|---|---|
| [1] | CIS module (CIS) | [2] | Reference plate |
| [3] | CIS adjusting plate | [4] | CIS adjusting plate fixing screw |

| | | | |
|---|---|---|---|
| [5] | Adjusting dial | [6] | Reference line |
| [7] | Adjustment scale | [8] | CIS module movement direction: + (right) |
| [9] | CIS module movement direction: - (left) | - | - |

### (2) Adjustment direction conceptual drawing

Upper view

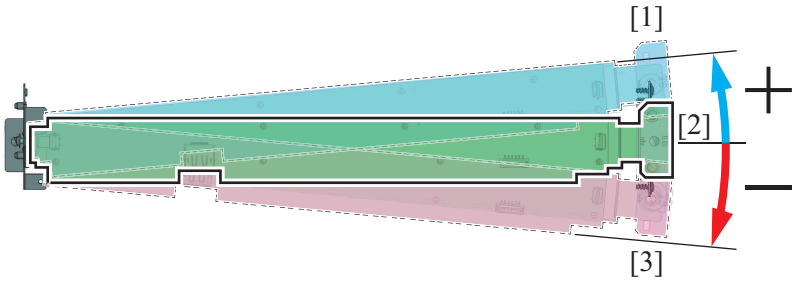


| | | | |
|---|---|---|---|
| [1] | CIS module movement direction: + (right) | [2] | Home position |
| [3] | CIS module movement direction: - (left) | - | - |

# PC THEORY OF OPERATION PC-110/PC-210

## 1. CONFIGURATION

PC-110

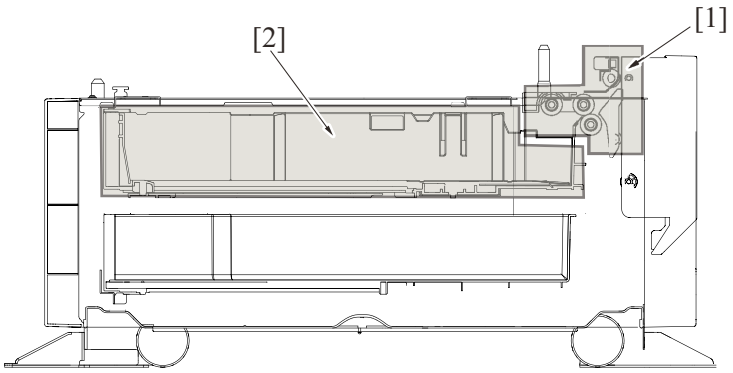


| | | | |
|---|---|---|---|
| [1] | Tray 3 paper feed section | [2] | Paper feed tray section (tray 3) |

PC-210

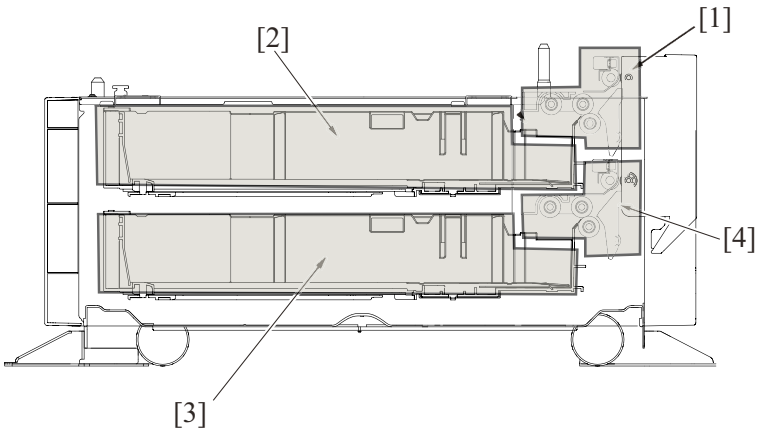


| | | | |
|---|---|---|---|
| [1] | Tray 3 paper feed section | [2] | Paper feed tray section (tray 3) |
| [3] | Paper feed tray section (tray 4) | [4] | Tray 4 paper feed section |

# 2. PAPER PATH

PC-110

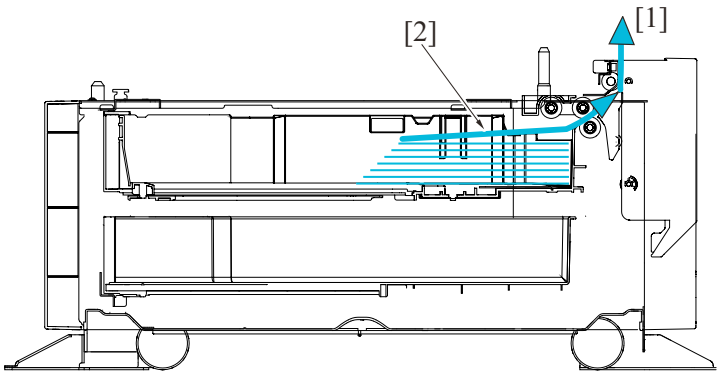


| | | | |
|---|---|---|---|
| [1] | Transportation to main body | [2] | Paper feed from tray 3 |

PC-210

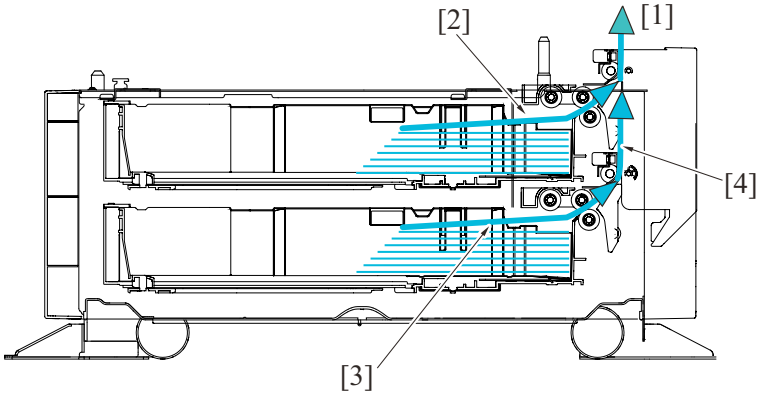


| | | | |
|---|---|---|---|
| [1] | Transportation to main body | [2] | Paper feed from tray 3 |
| [3] | Paper feed from tray 4 | [4] | Vertical transport |

# 3. DRIVE

PC-110

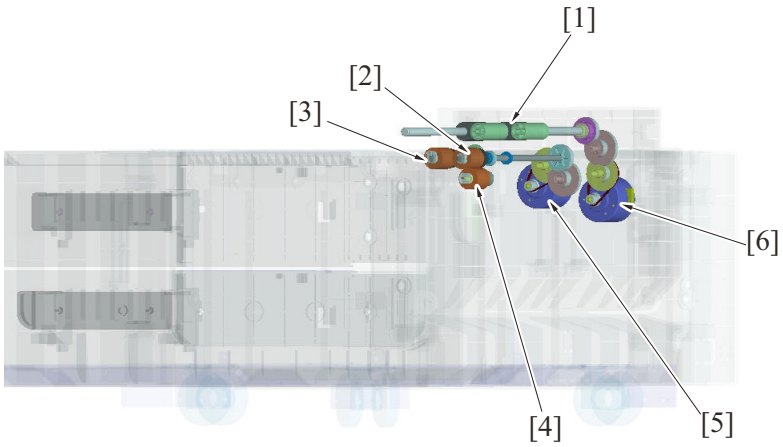


| | | | |
|---|---|---|---|
| [1] | Tray 3 vertical transport roller | [2] | Tray 3 feed roller |
| [3] | Tray 3 pick-up roller | [4] | Tray 3 separation roller |
| [5] | Tray 3 paper feed motor (M111) | [6] | Tray 3 vertical transport motor (M112) |

PC-210

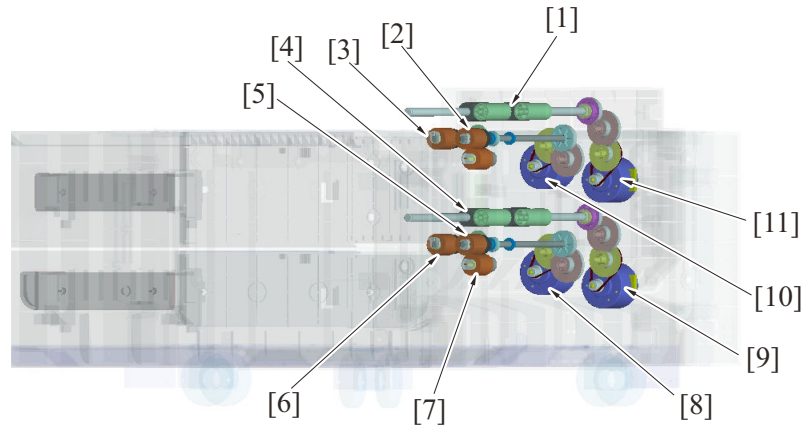


| | | | |
|---|---|---|---|
| [1] | Tray 3 vertical transport roller | [2] | Tray 3 feed roller |
| [3] | Tray 3 pick-up roller | [4] | Tray 4 vertical transport roller |
| [5] | Tray 4 feed roller | [6] | Tray 4 pick-up roller |
| [7] | Tray 4 separation roller | [8] | Tray 4 paper feed motor (M121) |
| [9] | Tray 4 vertical transport motor (M122) | [10] | Tray 3 paper feed motor (M111) |
| [11] | Tray 3 vertical transport motor (M112) | - | - |

# 4. OPERATION

## 4.1 Paper feed section

### 4.1.1 Paper feed drive mechanism

- Tray 3 has a paper feed drive mechanism having the same arrangement as that of tray 4. The paper feed drive mechanism is structured in the same manner as in tray 1 and tray 2 of the main body.
- Whereas operation is controlled using a clutch in tray 1 and tray 2, tray 3 and tray 4 incorporates a paper feed motor that drives the pick-up roller and feed roller to feed the paper.
- Then, the vertical transport motor transports the paper through the vertical transport section.
- The pick-up roller takes up sheets of paper and the feed roller and separation roller ensure that only one sheet of paper is separated and fed into the main body.
- When the drawer is slid in, the lever is pushed to lower the pick-up roller.
- The tray is raised to cause the paper to push the feed roller. This raises the upper limit detection actuator, so that the upper limit is detected.
- The paper empty sensor detects when paper in the drawer runs out.

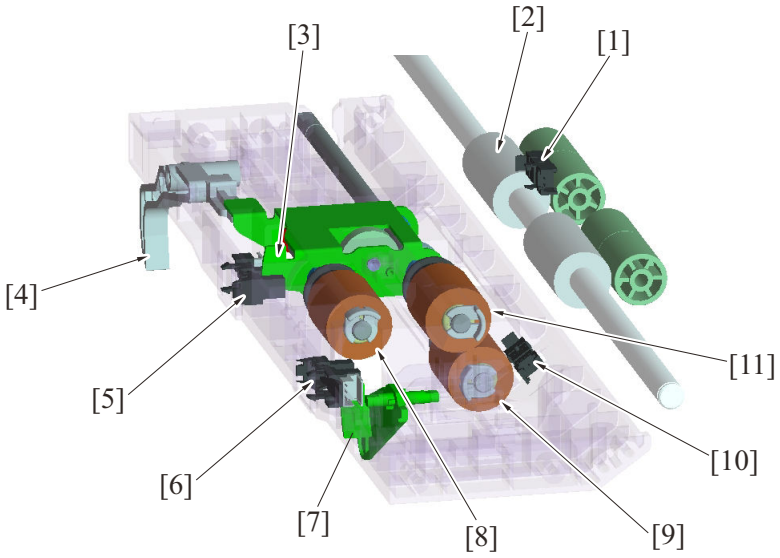


| | | | |
|---|---|---|---|
| [1] | Tray 3/4 vertical transport sensor (PS113/PS123) | [2] | Vertical transport roller |
| [3] | Upper limit detection actuator | [4] | Lever |
| [5] | Tray 3/4 upper limit sensor (PS116/PS126) | [6] | Tray 3/4 paper empty sensor (PS114/PS124) |
| [7] | Empty detection actuator | [8] | Pick-up roller |
| [9] | Separation roller | [10] | Tray 3/4 paper feed sensor (PS112/PS122) |
| [11] | Feed roller | - | - |

### 4.1.2 Roller retract mechanism

- When the paper tray is inserted or pulled out, there is a mechanism which retracts the pick-up roller and the separation roller.
- The pick-up roller retracts from the paper.
- The separation roller retracts from the feed roller.

Front view

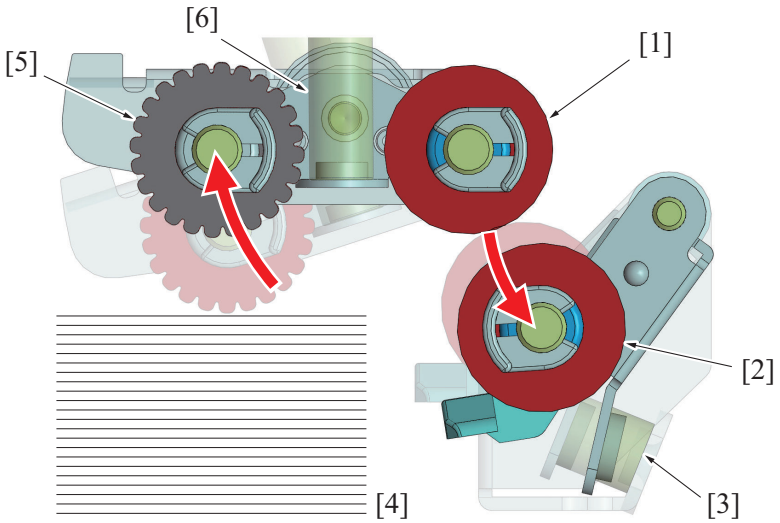


| | | | |
|---|---|---|---|
| [1] | Feed roller | [2] | Separation roller |
| [3] | Separation roller pressure spring | [4] | Paper |
| [5] | Pick-up roller | [6] | Pick-up roller pressure spring |

### (1) Pick-up roller retract mechanism

- When the paper tray is inserted or pulled out, the pick-up roller prevents the paper from being damaged.
- The pick-up roller comes down through spring pressure when the paper tray is closed. When paper is placed, the roller is pressed against the paper surface. (Paper feed position)
- If the paper tray lock is released, the roller lifting lever is also released and the pick-up roller holder is pushed up to the retraction position. It prevents the paper surface from being damaged even if the paper tray is pulled out.

Left side view

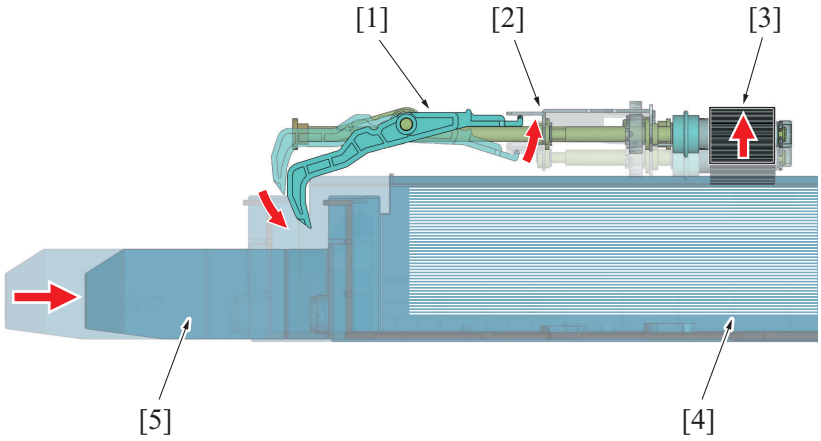


| | | | |
|---|---|---|---|
| [1] | Roller lifting lever | [2] | Pick-up roller holder |
| [3] | Pick-up roller (retract position) | [4] | Paper |
| [5] | Paper tray (lock released) | - | - |

### (2) Separation roller retract mechanism

- When a paper jam occurs and paper is caught between rollers where the feed roller is pressing the separation roller, paper will be left inside the machine through pulling out the paper tray. If you insert the paper tray in that state, the paper may get torn in pieces which may fall off and scatter inside the machine. It prevents paper from being torn or falling off through retracting the separation roller.
- The separation roller is pressed against the feed roller by spring pressure when the paper tray is closed. (Paper feed position)
- Release the paper tray lock, the roller pushdown lever is also released and the separation roller retract lever is pushed down to the retracting position. It releases the paper from the rollers even if it is jammed between the rollers.

Left side view

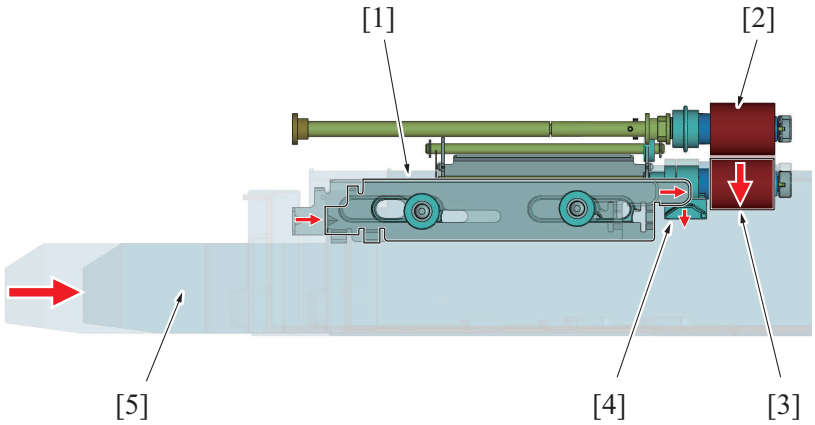


| | | | |
|---|---|---|---|
| [1] | Roller pushdown lever | [2] | Feed roller |
| [3] | Separation roller (retract position) | [4] | Separation roller retract lever |
| [5] | Paper tray (lock released) | - | - |

## 4.1.3 Paper lifting motion

- The FD paper size board of each tray detects whether the drawer is slid in or out.
- When the FD paper size board is activated, the lift-up motor is energized to thereby raise the paper lifting plate.
- The paper stack of the tray pushes up the pick-up roller.
- When the upper limit position is detected by the upper limit sensor, it stops raising the paper lifting plate.
- As paper is consumed during the print cycle and the pick-up roller is lowered, the lift-up motor is energized until the upper limit sensor is blocked again.

### (1) When the drawer is slid in

1. The paper lifting plate goes up and the top surface of the paper stack pushes up the pick-up roller.
2. The lifting motion stops as soon as the upper limit sensor detects the upper limit position.

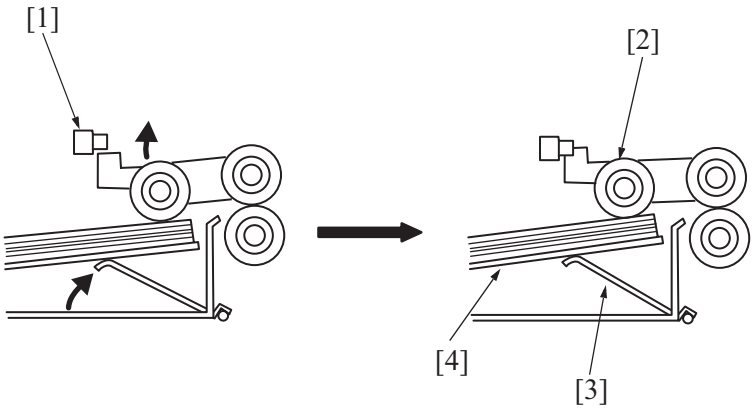


| | | | |
|---|---|---|---|
| [1] | Tray 3/4 upper limit sensor (PS116/PS126) | [2] | Pick-up roller |
| [3] | Paper lifting plate B | [4] | Paper lifting plate A |

**(2) During a print cycle**

*1.* As the paper is consumed, the upper limit sensor is unblocked. Then the paper lifting plate goes up.

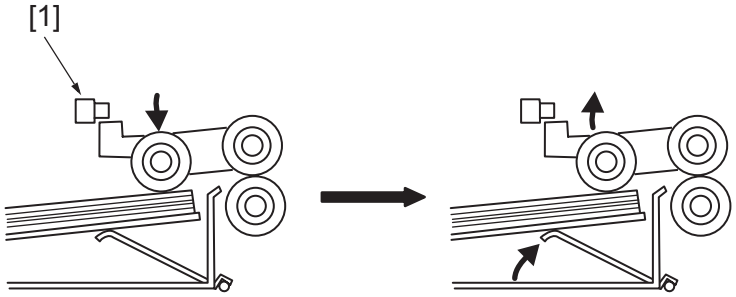


| | | | |
|---|---|---|---|
| [1] | Tray 3/4 upper limit sensor (PS116/PS126) | - | - |

## 4.2 Paper feed tray section

### 4.2.1 Paper size detection

- When the paper length guide of the drawer is moved, the circular paper length detection plate located on the bottom of the drawer turns.
- The paper length is detected by the lever that operates in conjunction with the paper length detection plate, and four paper length detection sensors on the FD paper size board.
- Moving the paper width guide activates or deactivates two paper width detection sensors on the CD paper size board through the cutout in the lever.
- The combination of the four paper length detection sensors and two paper width detection sensors that are either activated or deactivated, determines the size of the paper loaded in the drawer.
- The FD paper length detection sensor detects that the drawer is slid into position as it is slid in.

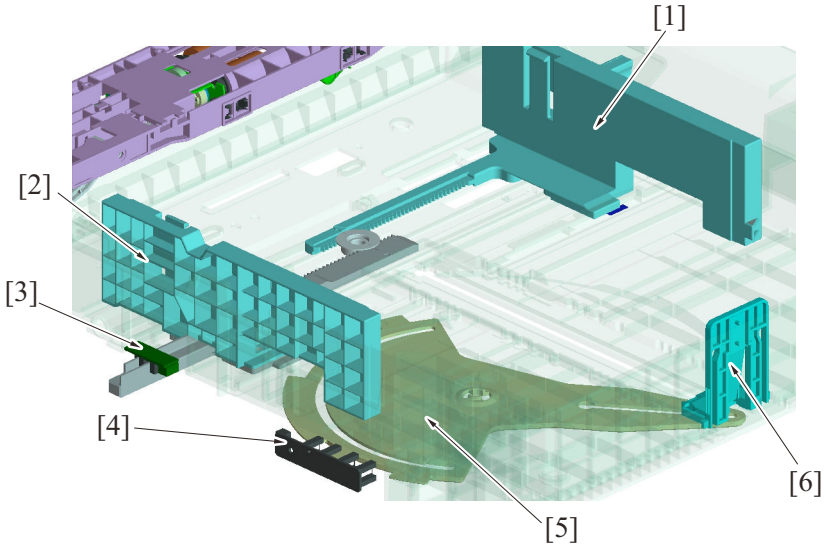


| | | | |
|---|---|---|---|
| [1] | Paper width guide plate (front) | [2] | Paper width guide plate (rear) |
| [3] | Tray 3/4 CD paper size board (CDPSB/3, CDPSB/4) | [4] | Tray 3/4 FD paper size board (FDPSB/3, FDPSB/4) |
| [5] | Paper length detection plate | [6] | Paper length guide |

### 4.2.2 Paper feed tray locking mechanism

- The paper feed tray is provided with a locking mechanism.

#### (1) Unlocking the paper feed tray

- With drawing the lever of the paper feed tray to the front will disengage the tray lock lever equipped on the right side of the paper feed tray.
- The paper feed tray can be pulled out of the machine by continuing pulling the lever with the tray lock lever disengaged.
- Rollers are provided for the right and left tray rails. They reduce the operating force required for sliding in/out the paper feed tray.

#### (2) Locking the paper feed tray

- Pushing the lever of the paper feed tray all the way toward the rear will allow the paper feed tray to be slid into the machine.
- When the paper feed tray is inserted all the way in place, the tray lock lever equipped on the right side of the paper feed tray locks the tray in place.
- To prevent false detection, the paper feed tray is equipped with a spring in the rear that pushes the tray back out if the tray is not inserted all the way in place.

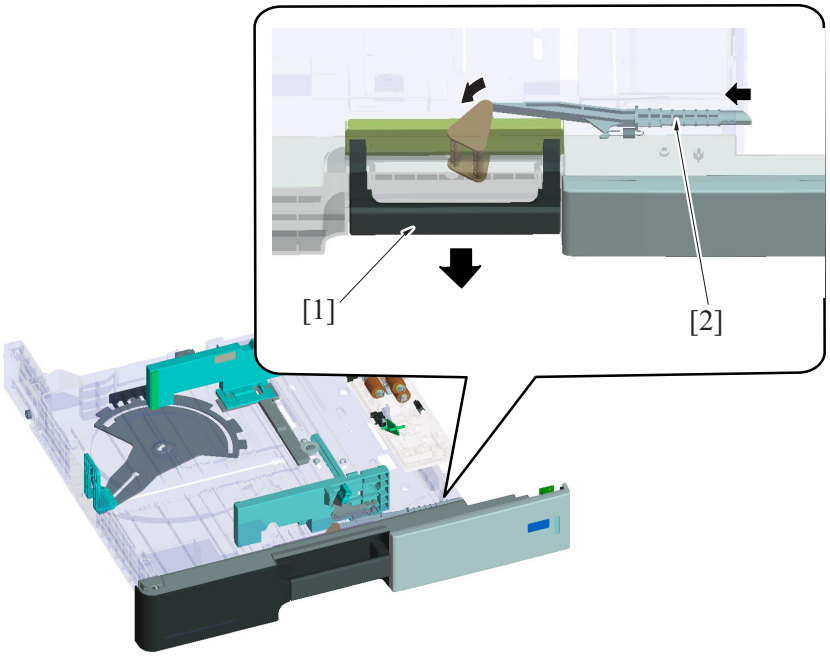


| | | | |
|---|---|---|---|
| [1] | Lever of the paper feed tray | [2] | Lock lever |

### 4.2.3 Remaining paper display mechanism

- The amount of remaining paper is indicated by the LED on the right side of each tray and by the screen of the control panel.
- The estimate amount of paper for near empty is around 50 sheets.

#### (1) Display state

| Tray status | Empty | Near empty | Other status (During lifting-up and with tray not being set included) |
|---|---|---|---|
| LED status | Lit | OFF/Blink * | Unlit |

NOTICE

- The near empty display may be OFF or Blink as set for within “Machine State LED Setting” of the service mode. (The default setting is OFF.)

Tray paper remaining amount display LED

PC-110 PC-210

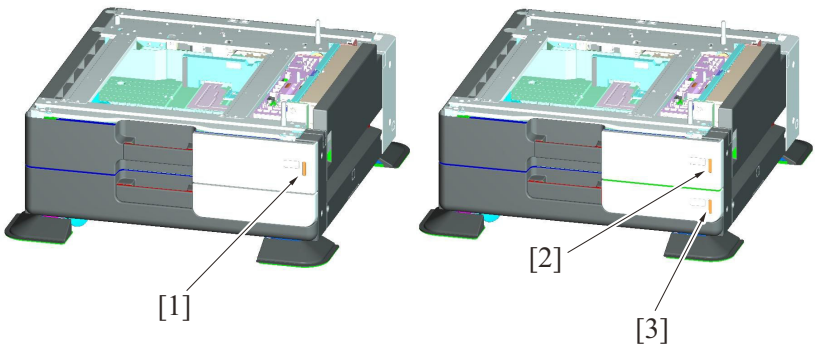

| | | | |
|---|---|---|---|
| [1] | Tray 3 paper remaining amount display LED (PC-110) | [2] | Tray 3 paper remaining amount display LED (PC-210) |
| [3] | Tray 4 paper remaining amount display LED | - | - |

Display on the control panel when paper empty is occurred

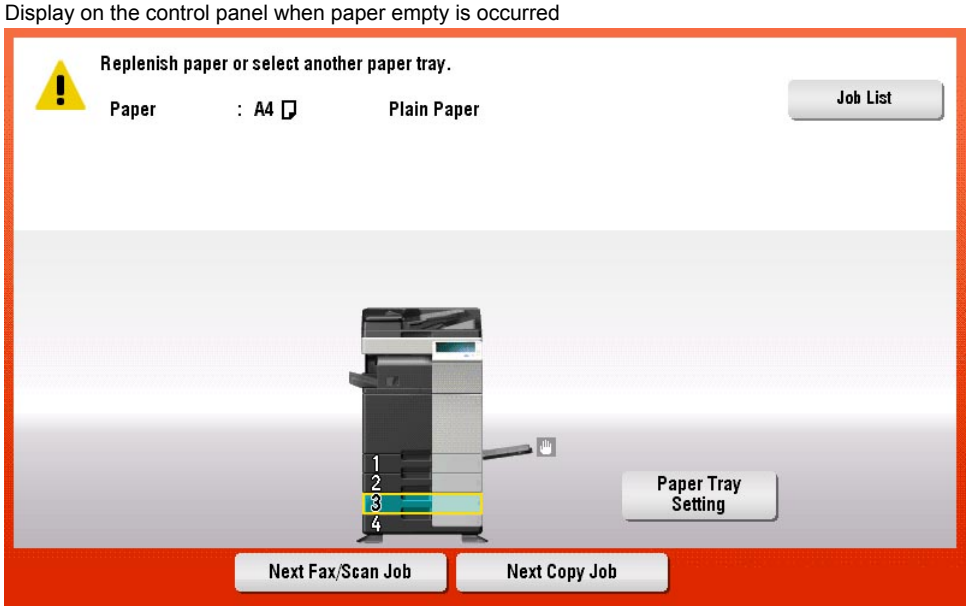


## 4.3 Dehumidifier mechanism (HT-509/MK-734)

The optional heater HT-509 can be attached to the top of the paper feed cabinet.

### 4.3.1 Configuration

To make use of the function of the heater HT-509, the following combined optional equipment is required.

- Paper Feed Cabinet PC-110 or PC-210
- Heater HT-509
- Power Supply BOX MK-734

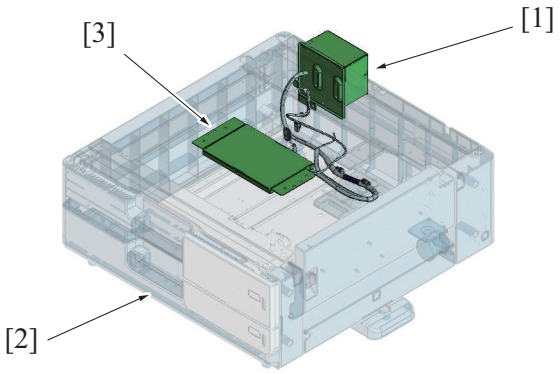


| | | | |
|---|---|---|---|
| [1] | Power Supply BOX MK-734 | [2] | Paper feed cabinet (Example: PC-210) |
| [3] | Heater (DH111): HT-509 | - | - |

### 4.3.2 Function

- The dehumidifier heater generates heat when it is energized, which prevents the paper in the machine feeder and paper feed cabinet from absorbing the damp. It prevents paper curling, paper misfeeds, paper jams, and abnormal images that occur when paper absorbs the damp.

### 4.3.3 Control

- Turn on the dehumidifier heater switch of the power supply box MK-734 to perform humidity control.
- Turn off the dehumidifier heater switch to stop humidity control.

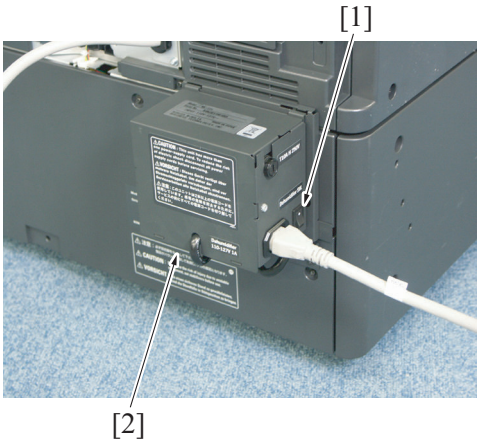


| | | | |
|---|---|---|---|
| [1] | Dehumidifier heater switch | [2] | Power Supply BOX MK-734 |

### (1) Operation timing

- If the machine is stopped*, the dehumidifier heater is energized and generates heat.
- When the machine starts normally, it stops energizing the dehumidifier heater.

**NOTE**

- ***: When the covers are opened, a problem or paper jam occurs, or in power-saving mode.**

# PD THEORY OF OPERATION PC-410

## 1. CONFIGURATION

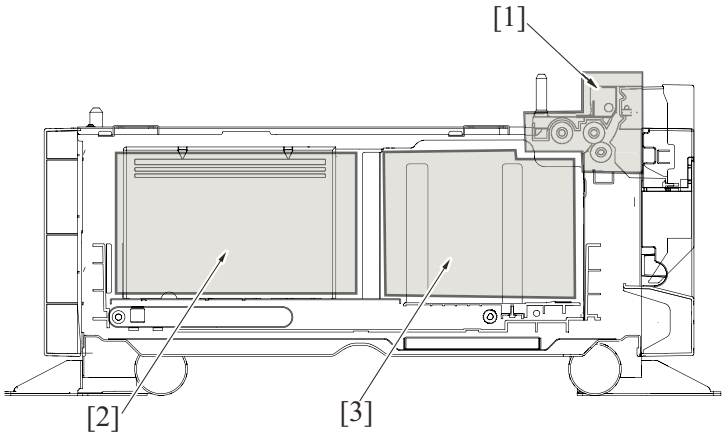


| | | | |
|---|---|---|---|
| [1] | Paper feed section | [2] | Sub tray |
| [3] | Main tray | - | - |

# 2. PAPER PATH

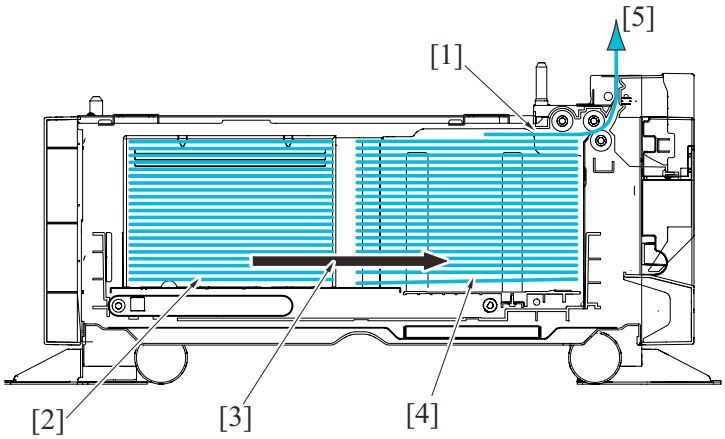


| | | | |
|---|---|---|---|
| [1] | Paper feed from main tray | [2] | Sub tray |
| [3] | Move from the sub tray to the main tray | [4] | Main tray |
| [5] | Transportation to main body | - | - |

# 3. DRIVE

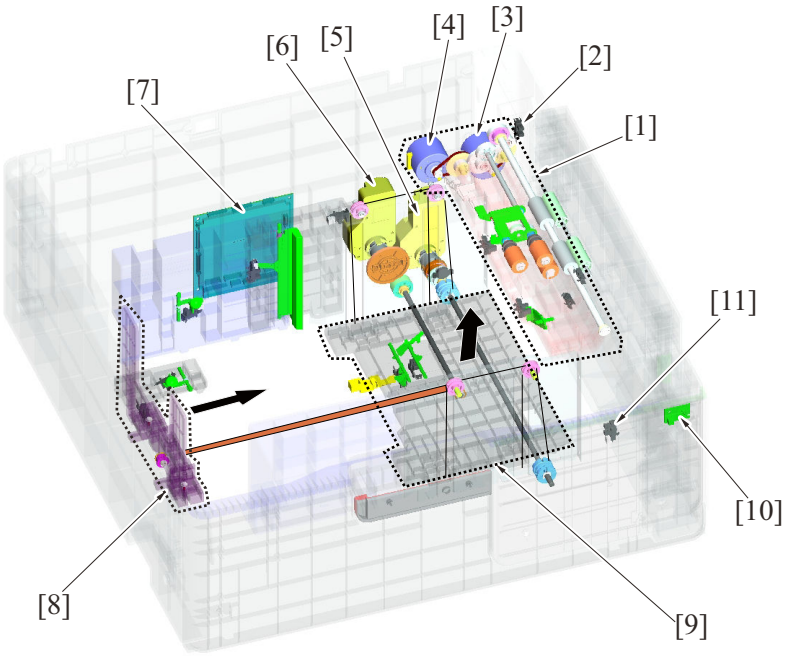


| | | | |
|---|---|---|---|
| [1] | Paper feed section | [2] | Right bottom door sensor (PS131) |
| [3] | Vertical transport motor (M132) | [4] | Paper feed motor (M131) |
| [5] | Elevator motor (M134) | [6] | Shifter motor (M133) |
| [7] | PC control board (PCCB) | [8] | Shifter |
| [9] | Elevator tray | [10] | Tray 3 paper empty indicator board (PEIB/3) |
| [11] | Cassette set sensor (PS143) | - | - |

# 4. OPERATION

## 4.1 Paper feed section

### 4.1.1 Paper feed drive mechanism

- The same paper feed drive mechanism as that found in PC-210/110 is incorporated.
- The paper feed motor drives the pick-up roller and feed roller to take up and feed a sheet of paper into the main body.
- Then, the vertical transport motor transports the paper through the vertical transport section.
- The pick-up roller takes up sheets of paper and the feed roller and separation roller ensure that only one sheet of paper is separated and fed into the main body.
- When the drawer is slid in, the lever is pushed to lower the pick-up roller.
- The tray is raised to cause the paper to push the feed roller. The tray is brought to a stop when the main tray upper limit sensor detects the upper limit.
- The main tray upper paper empty sensor detects whether paper is loaded on the main tray at the upper limit position.

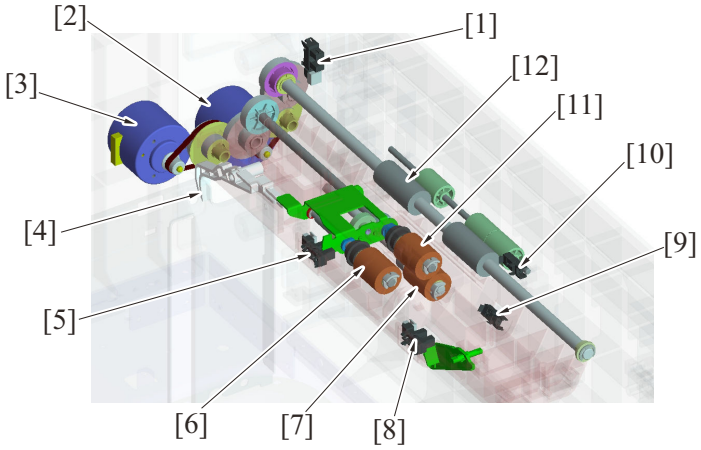


| | | | |
|---|---|---|---|
| [1] | Right bottom door sensor (PS131) | [2] | Vertical transport motor (M132) |
| [3] | Paper feed motor (M131) | [4] | Lever |
| [5] | Main tray upper limit sensor (PS136) | [6] | Pick-up roller |
| [7] | Separation roller | [8] | Main tray upper paper empty sensor (PS137) |
| [9] | Paper feed sensor (PS132) | [10] | Vertical transport sensor (PS133) |
| [11] | Feed roller | [12] | Vertical transport roller |

### 4.1.2 Roller retract mechanism

- When the paper tray is inserted or pulled out, there is a mechanism which retracts the pick-up roller and the separation roller.
- The pick-up roller retracts from the paper.
- The separation roller retracts from the feed roller.

Front view

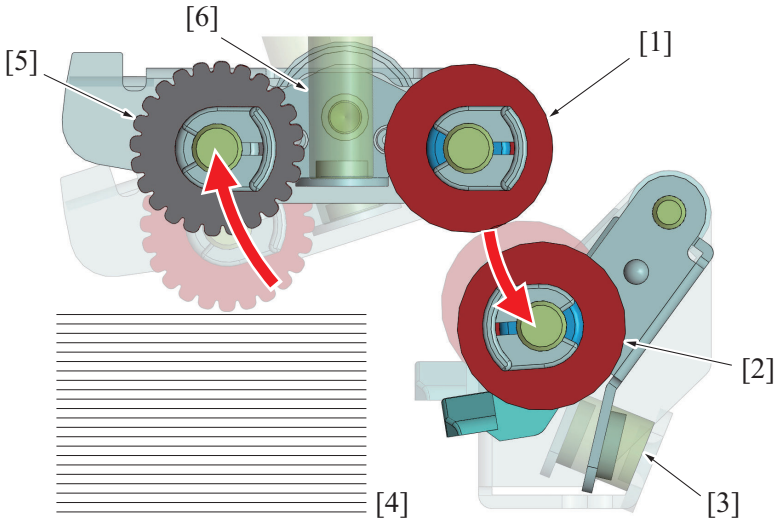


| | | | |
|---|---|---|---|
| [1] | Feed roller | [2] | Separation roller |
| [3] | Separation roller pressure spring | [4] | Paper |
| [5] | Pick-up roller | [6] | Pick-up roller pressure spring |

#### (1) Pick-up roller retract mechanism

- When the paper tray is inserted or pulled out, the pick-up roller prevents the paper from being damaged.
- The pick-up roller comes down through spring pressure when the paper tray is closed. When paper is placed, the roller is pressed against the paper surface. (Paper feed position)

- If the paper tray lock is released, the roller lifting lever is also released and the pick-up roller holder is pushed up to the retraction position. This structure prevents the paper surface from being damaged even if the paper tray is pulled out.

Left side view

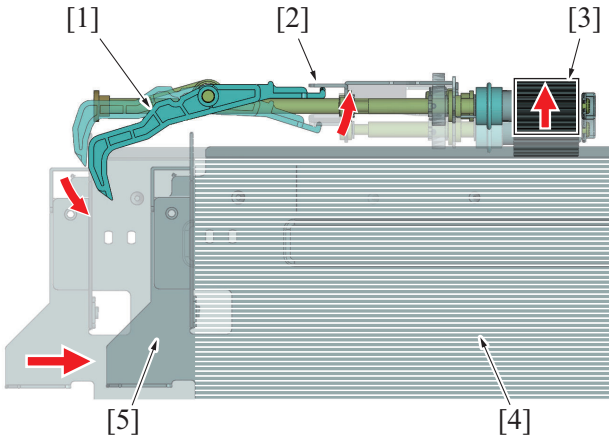


| | | | |
|---|---|---|---|
| [1] | Roller lifting lever | [2] | Pick-up roller holder |
| [3] | Pick-up roller (retract position) | [4] | Paper |
| [5] | Paper tray (lock released) | - | - |

### (2) Separation roller retract mechanism

- When a paper jam occurs and paper is caught between rollers where the feed roller is pressing the separation roller, paper will be left inside the machine through pulling out the paper tray. If you insert the paper tray in that state, the paper may get torn in pieces which may fall off and scatter inside the machine. It prevents paper from being torn or falling off through retracting the separation roller.
- The separation roller is pressed against the feed roller by spring pressure when the paper tray is closed. (Paper feed position)
- Release the paper tray lock, the roller pushdown lever is also released and the separation roller retract lever is pushed down to the retracting position. It releases the paper from the rollers even if it is jammed between the rollers.

Left side view

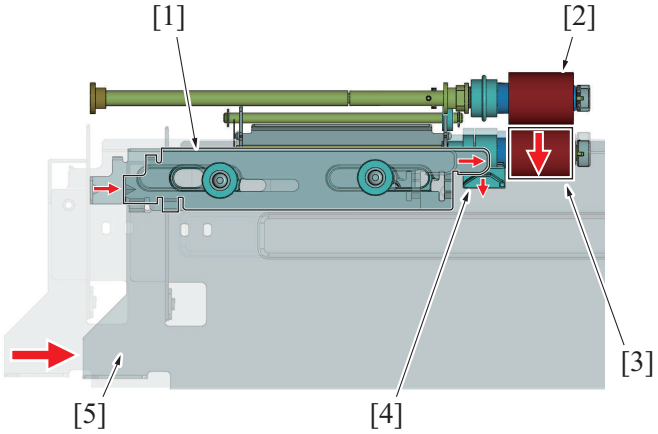


| | | | |
|---|---|---|---|
| [1] | Roller pushdown lever | [2] | Feed roller |
| [3] | Separation roller (retract position) | [4] | Separation roller retract lever |
| [5] | Paper tray (lock released) | - | - |

## 4.2 Main tray section

### 4.2.1 Main tray up / down mechanism

- The elevator tray is suspended by the cables at the front and rear.
- As the elevator motor turns forward or backward, the cables are wound to raise or lower the tray.
- The amount of paper left in the main tray is calculated using time for the lifting motion (period of time through which the elevator motor is kept energized).
- When the amount of paper becomes small, the near empty detection actuator blocks the main tray paper near empty sensor.
- When paper in the main tray runs out, the main tray paper empty sensor detects that condition and a descent motion of the main tray is started.
- The shifter stop/lower limit position sensor detects the main tray at its lower limit position.

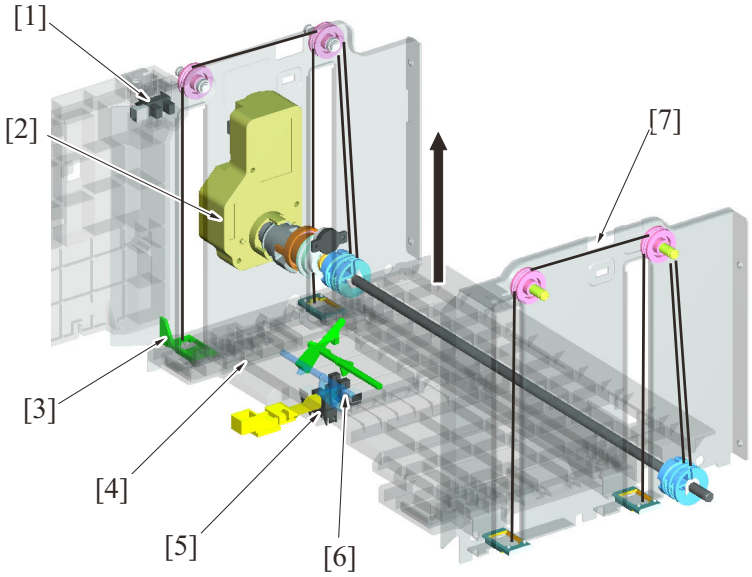


| | | | |
|---|---|---|---|
| [1] | Main tray paper near empty sensor (PS135) | [2] | Elevator motor (M134) |
| [3] | Near empty detection actuator | [4] | Main tray |
| [5] | Shifter stop / lower limit position sensor (PS138) | [6] | Main tray paper empty sensor (PS134) |
| [7] | Wire | - | - |

### 4.2.2 Main tray lower limit detection

#### (1) Main tray lower limit detection

- If the sub tray is detected to be loaded with paper when paper on the main tray runs out, the descent motion of the main tray is started.
- The shifter stop/lower limit position sensor detects the lower limit position of the main tray.
- This sensor has two functions and detects also the stop position of the shifter.
- The shift stop position detection actuator portion detects the shifter stop position when it is pushed as a result of the lever being pushed by the shifter.

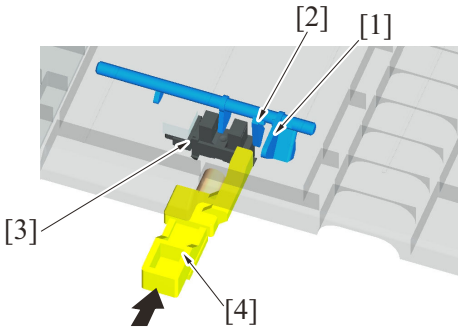


| | | | |
|---|---|---|---|
| [1] | Lower limit detection actuator portion | [2] | Shifter stop position detection actuator portion |
| [3] | Shifter stop / lower limit position sensor (PS138) | [4] | Lever |

#### (2) Main tray lower operation

- If the sub tray is detected to be not loaded with paper when paper on the main tray runs out, the descent motion of the main tray is not performed. The main tray is lowered when the drawer is slid out.
- When the drawer is slid out, the elevator motor is disengaged from the gear, so that the main tray lowers by its own weight.
- At this time, an effect of the damper connected to the gear prevents the main tray from lowering swiftly and ensures a slow descent motion.

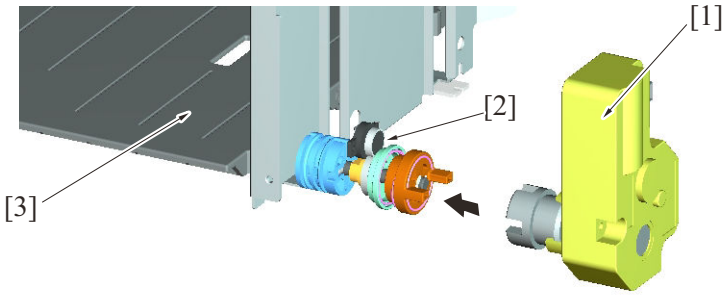


| | | | |
|---|---|---|---|
| [1] | Elevator motor (M134) | [2] | Damper |
| [3] | Main tray | - | - |

## 4.3 Sub tray section

### 4.3.1 Shifter drive mechanism

- If the main tray runs out of paper, while the sub tray is loaded with paper, the paper stack on the sub tray is moved to the main tray.
- The shifter motor drives the belt, which moves the shifter to thereby move the paper stack.
- The shifter moves to the position of the shifter stop/lower limit position sensor. Then, the shifter motor is rotated backward to return the shifter to, and stop it at, the position at which the shifter home sensor is blocked.

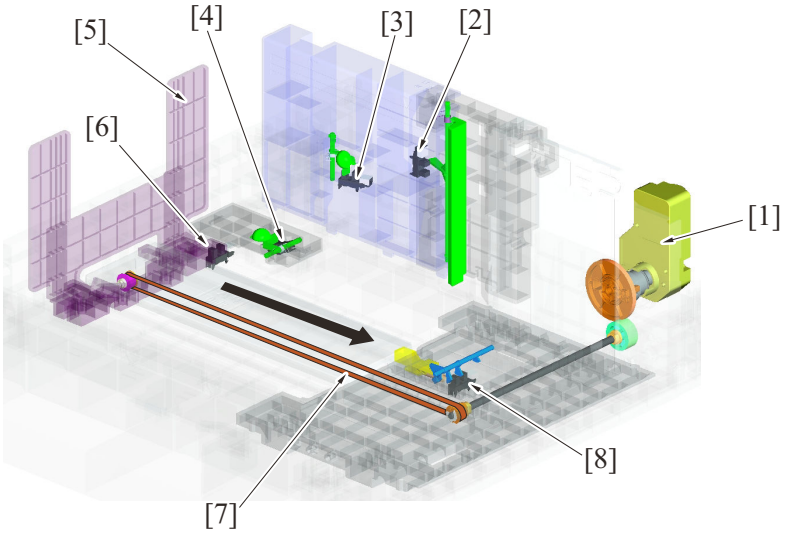


| | | | |
|---|---|---|---|
| [1] | Shifter motor (M133) | [2] | Division board sensor (PS142) |
| [3] | Sub tray paper remaining amount sensor (PS141) | [4] | Sub tray paper empty sensor (PS140) |
| [5] | Shifter | [6] | Shifter home sensor (PS139) |
| [7] | Belt | [8] | Shifter stop / lower limit position sensor (PS138) |

### 4.3.2 Sub tray paper remaining amount

- The amount of paper left on the sub tray, is detected by the combination of states of the sub tray paper remaining amount sensor and the sub tray paper empty sensor. The amount of paper left is detected at three different levels.
- Roughly speaking, the sub tray paper remaining amount sensor is deactivated from the activated state when the amount of paper left is about half the capacity of the tray.

| Paper remaining amount | Sub tray paper remaining amount sensor | Sub tray paper empty sensor |
|---|---|---|
| Large | ON | ON |
| Small | OFF | ON |
| None | OFF | OFF |

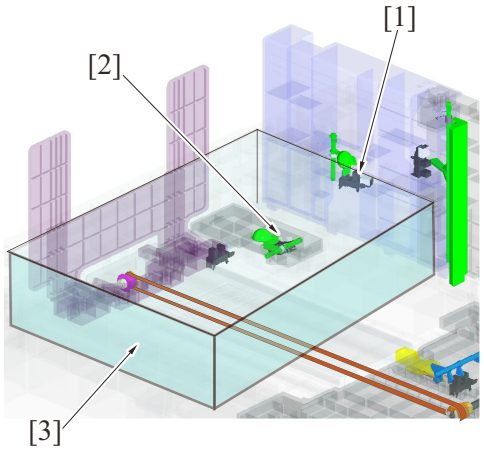


| | | | |
|---|---|---|---|
| [1] | Sub tray paper remaining amount sensor (PS141) | [2] | Sub tray paper empty sensor (PS140) |
| [3] | Paper | - | - |

## 4.4 Remaining paper amount displayed mechanism

- The amount of remaining paper is indicated by the LED on the right side of each tray and by the screen of the control panel.
- The estimate amount of paper for near empty is around 100 as 64 g/m$^2$ (17 lb) paper.

### 4.4.1 Display state

| Tray status | Empty | Near empty | Other status (During lifting-up and with tray not being set included) |
|---|---|---|---|

| LED status | Lit | OFF/Blink * | Unlit |
|---|---|---|---|

NOTICE
- The near empty display may be OFF or Blink as set for within “Machine State LED Setting” of the service mode. (The default setting is OFF.)
- The LED is OFF regardless of the amount of paper left in the tray in the energy save mode.

Tray paper remaining amount display LED

PC-410

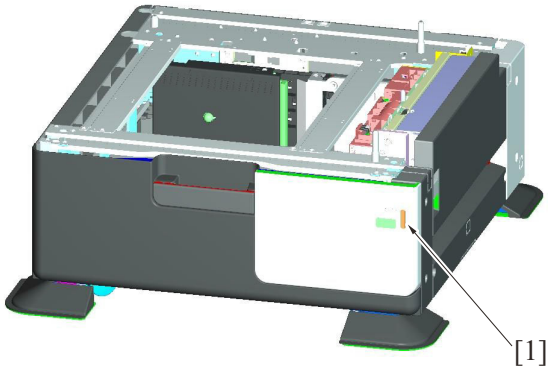


| | | | |
|---|---|---|---|
| [1] | Tray paper remaining amount display LED | - | - |

Display on the control panel when paper empty is occurred

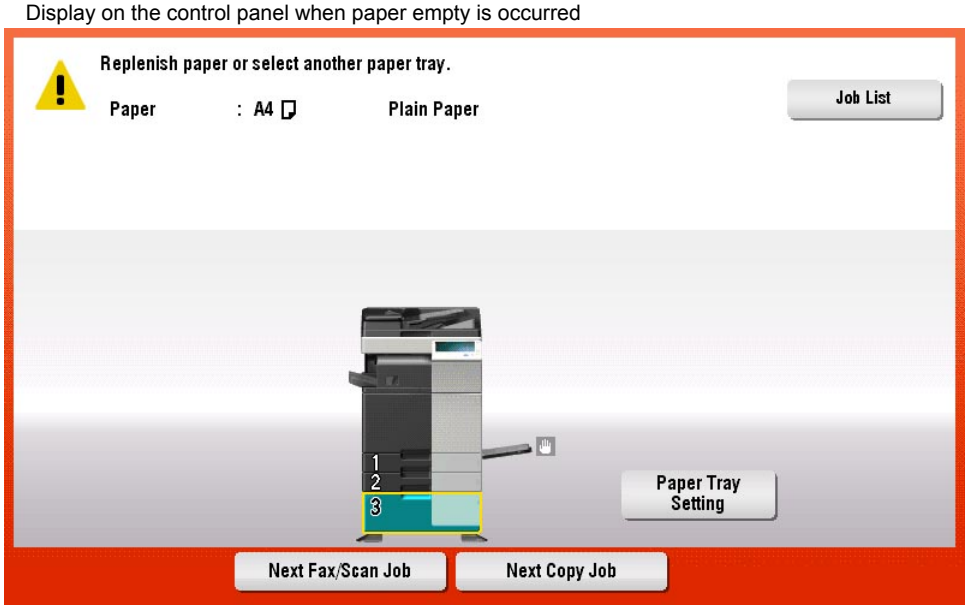


## 4.5 Dehumidifier mechanism (HT-509/MK-719)

The optional heater HT-509 can be attached to the top of the paper feed cabinet.

### 4.5.1 Configuration

To make use of the function of the heater HT-509, the following combined optional equipment is required.
- Paper Feed Cabinet PC-410
- Heater HT-509
- Power Supply BOX MK-734

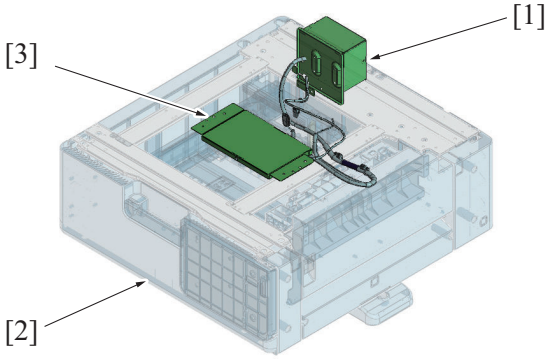


| | | | |
|---|---|---|---|
| [1] | Power Supply BOX MK-734 | [2] | Paper Feed Cabinet PC-410 |
| [3] | Heater HT-509 (DH1) | - | - |

### 4.5.2 Function

- The dehumidifier heater generates heat when it is energized, which prevents the paper in the machine feeder and paper feed cabinet from absorbing the damp. It prevents paper curling, paper misfeeds, paper jams, and abnormal images that occur when paper absorbs the damp.

### 4.5.3 Control

- Turn on the dehumidifier heater switch on the power supply box MK-734 to perform humidity control.
- Turn off the dehumidifier heater switch to stop humidity control.

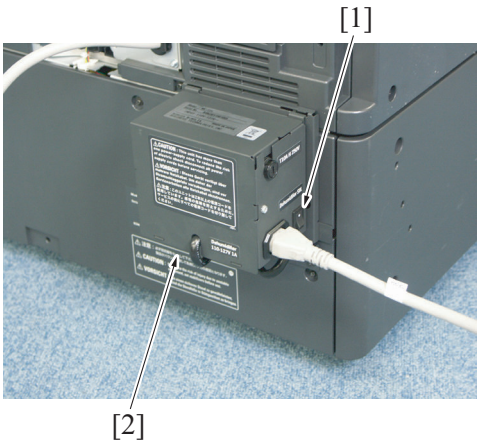


| | | | |
|---|---|---|---|
| [1] | Dehumidifier heater switch | [2] | Power Supply BOX MK-734 |

#### (1) Operation timing

- If the machine is stopped*, the dehumidifier heater is energized and generates heat.
- When the machine starts normally, it stops energizing the dehumidifier heater.

**NOTE**

- ***: When the covers are opened, a problem or paper jam occurs, or in power-saving mode.**

# PE THEORY OF OPERATION LU-302

## 1. CONFIGURATION

### 1.1 Section configuration

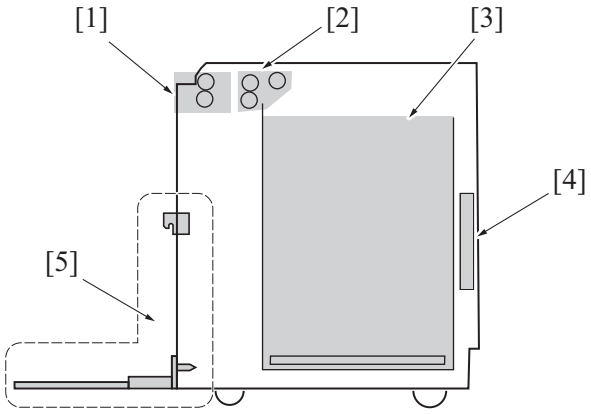


| | | | |
|---|---|---|---|
| [1] | Paper transport section | [2] | Paper feed section |
| [3] | Paper storage section | [4] | Dehumidifier heater section |
| [5] | Unit open/close section | - | - |

### 1.2 Paper path

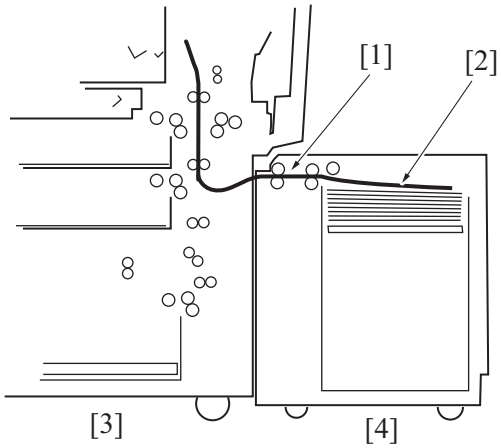


| | | | |
|---|---|---|---|
| [1] | Transportation to main body | [2] | Paper feed from the tray |
| [3] | Main body | [4] | LU-302 |

### 1.3 Main part configuration

#### 1.3.1 Appearance

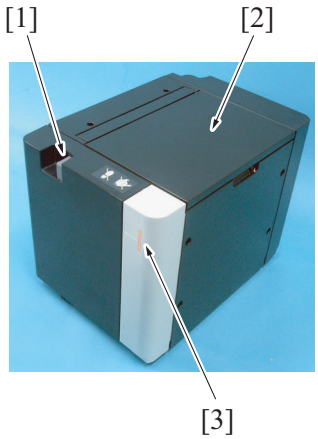


| | | | |
|---|---|---|---|
| [1] | Unit release lever | [2] | LU door |

| | | | |
|---|---|---|---|
| [3] | Tray LED | - | - |

### 1.3.2 Main part

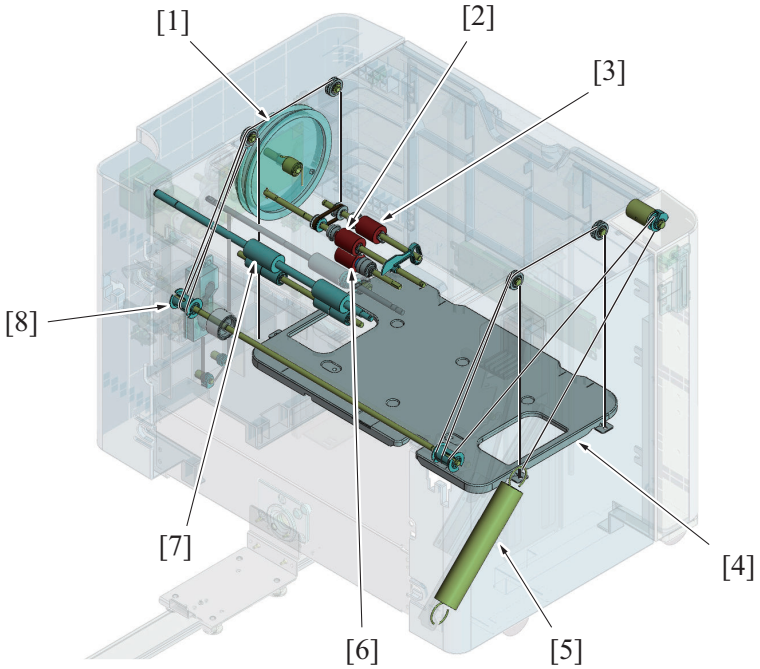


| | | | |
|---|---|---|---|
| [1] | Remaining paper detection plate | [2] | Feed roller |
| [3] | Pick-up roller | [4] | Paper tray |
| [5] | Drive assist spring | [6] | Separation roller |
| [7] | Transport roller | [8] | Lift-up axis |

### 1.3.3 Electrical part

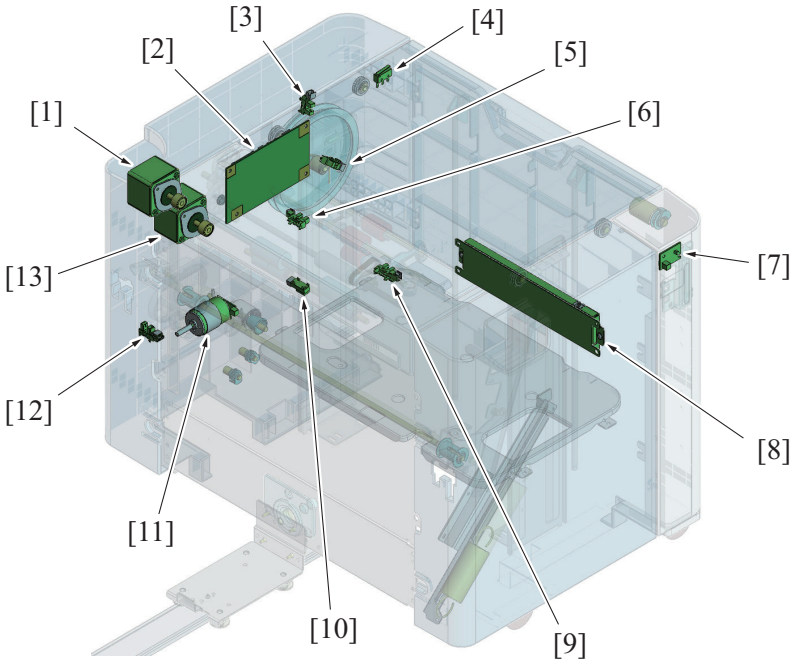


| | | | |
|---|---|---|---|
| [1] | Transport motor (M3) | [2] | LU drive board (LUDB) |
| [3] | Near empty sensor /1 (PS5) | [4] | LU door switch (MS1) |
| [5] | Near empty sensor /2 (PS6) | [6] | Upper limit sensor (PS2) |
| [7] | Tray LED (LED) | [8] | Dehumidification heater (DH) |
| [9] | Paper empty sensor (PS4) | [10] | Paper feed sensor (PS3) |
| [11] | Lift-up motor (M1) | [12] | Tray set sensor (PS1) |
| [13] | Paper feed motor (M2) | - | - |

# 2. DRIVE

## 2.1 Paper feed and transport drive

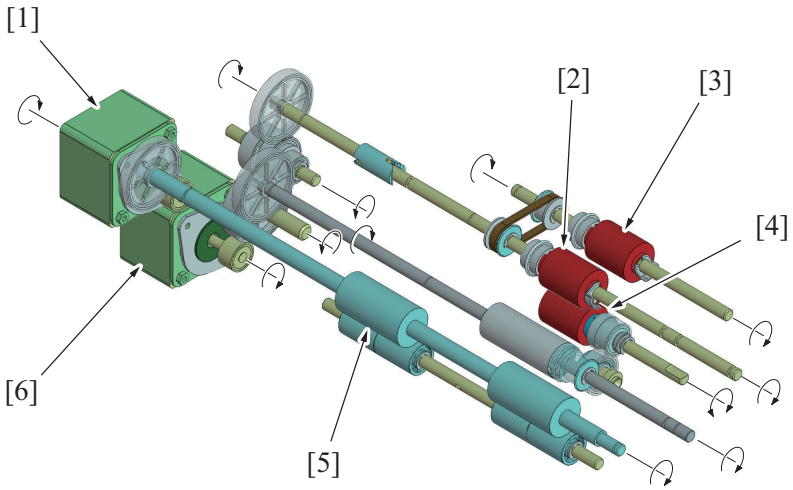


| | | | |
|---|---|---|---|
| [1] | Transport motor (M3) | [2] | Feed roller |
| [3] | Pick-up roller | [4] | Separation roller |
| [5] | Transport roller | [6] | Paper feed motor (M2) |

## 2.2 Paper lift-up drive

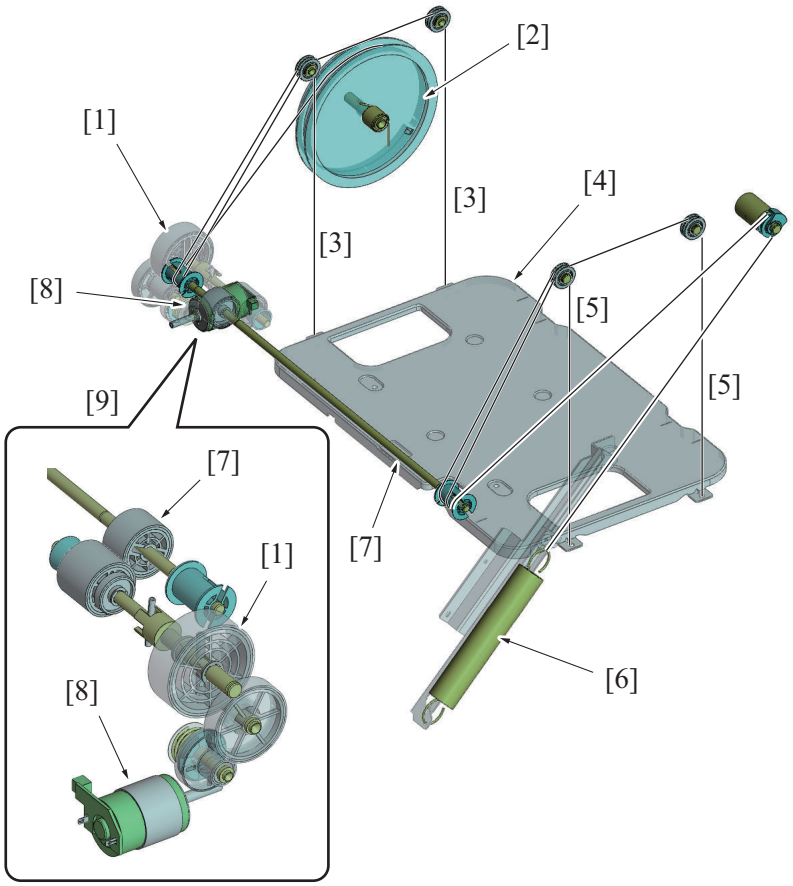


| | | | |
|---|---|---|---|
| [1] | Lift-up drive section | [2] | Remaining paper detection plate |
| [3] | Wire (rear side) | [4] | Paper tray |
| [5] | Wire (front side) | [6] | Drive assist spring |
| [7] | Lift-up axis | [8] | Lift-up motor (M1) |
| [9] | Lift-up motor around (rear view) | - | - |

# 3. OPERATION

## 3.1 Unit open/close section

### 3.1.1 Unit lock mechanism

- Operate the unit release lever in the front side of the large capacity paper feed unit (hereinafter referred to as paper feed unit), the locks (on both sides of front and back) attached to the left side of the paper feed unit will be released. It releases the link between the paper feed unit and the MFP, which makes it possible to slide the paper feed unit to the right.
- The paper feed unit is connected to the MFP via the coupling rail. The unit slides to the right side along the rail.
- Release the paper feed unit link, the tray set sensor gets unblocked and the sensor determines that the paper feed unit is released.
- If the sensor determines that the paper feed unit is released, printing from the paper feed unit is prohibited. (printing from other paper feed ports is still possible).
- The paper feed unit is linked to the MFP through sliding the unit to the left. The home position when the paper feed unit is linked is fixed with the lock pin on the MFP.
- Link the paper feed unit, printing from the paper feed unit will be enabled.

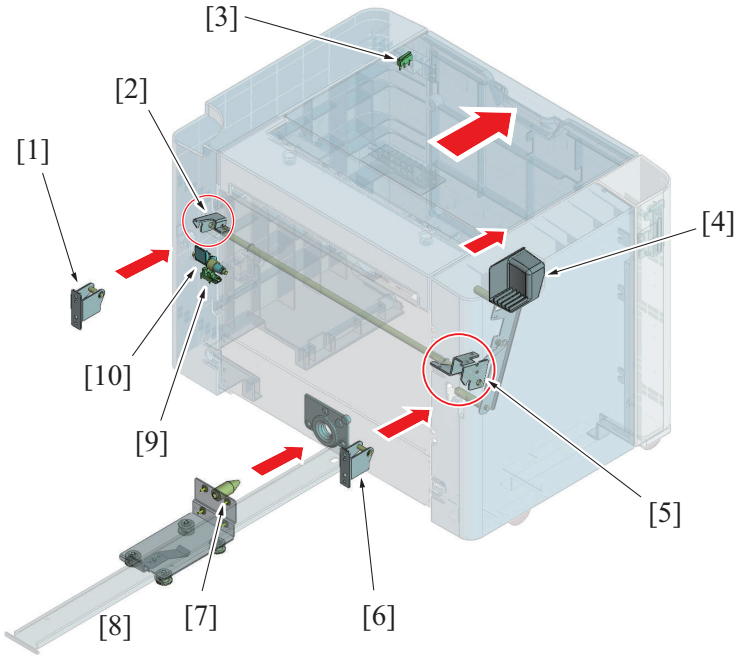


| | | | |
|---|---|---|---|
| [1] | Mounting plate (back): On the MFP | [2] | Lock (back) |
| [3] | LU door switch (MS1) | [4] | Unit release lever |
| [5] | Lock (front) | [6] | Mounting plate (front): On the MFP |
| [7] | Lock pin (on the MFP) | [8] | Coupling rail |
| [9] | Tray set sensor (PS1) | [10] | Actuator |

### 3.1.2 LU door open/close detection mechanism

- An LU door switch is provided at the top-right-rear side of the paper feed unit and detects the opening and closing of the LU door.
- When the LU door is closed, the open/close detection lever on the LU door pushes down the LU door switch. (ON)
- If the sensor determines that the LU door is open, printing from the paper feed unit is prohibited. (printing from other paper feed ports is still possible).
- Open the LU door, the paper tray lift-up drive link will be released.
  For details, see "PE.3.2.2 Paper tray lift-up drive release mechanism".
- Close the LU door, the paper tray lift-up drive will be connected and printing from the paper feed unit will be enabled.

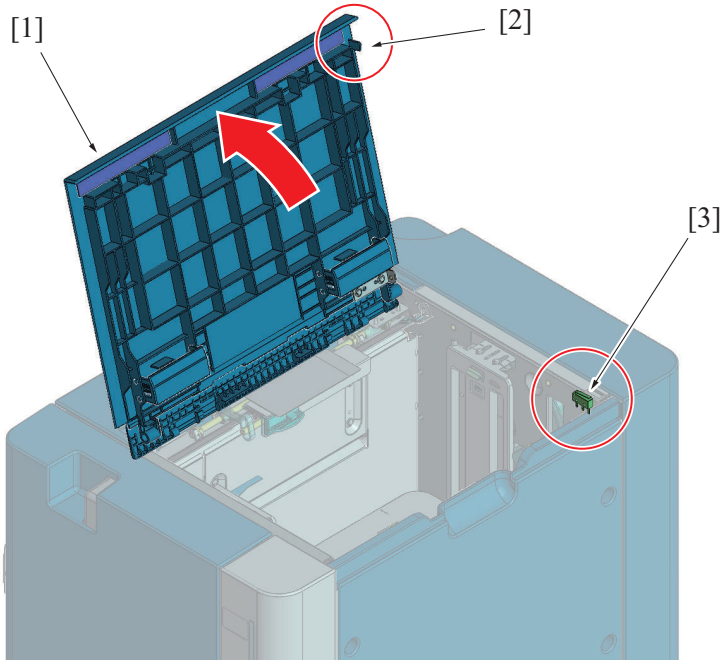


| | | | |
|---|---|---|---|
| [1] | LU door | [2] | LU door open/close detection lever |
| [3] | LU door switch (MS1) | - | - |

## 3.2 Paper storage section

### 3.2.1 Paper tray lifting mechanism

- Four wires are connected to the paper tray which lifts up the tray into its home position.
- Each wire is wound around the lift-up axis. Roll up a lift-up axis, the paper tray will be lifted up.
- The wire in the lift-up axis which is connected to the drive assist spring is also wound in the same direction. By the force of the drive assist spring, the unloaded paper tray (with no paper placed) is lifted up into the home position. (It does not go down to the lowest position)
- With the weight of the paper that is placed on the paper tray, the paper tray will be lowered down. The amount of lowering of the paper tray varies by paper weight. (Maximum load capacity: 3,000 sheets of plain paper)
- When the paper tray is lowered from the home position, upward force is applied to the paper tray by the drive assist spring. It decreases the load on the lift-up axis when paper is lifted up.
- This machine does not have a mechanism to detect the home position and lower limit position of the paper tray.
- Close the LU door, so that the lift-up motor and paper tray lifting mechanism are linked together.
- The lift-up motor rotates to wind the wires around the lift-up axis and lift up the paper tray. Thus, the surface of the paper is pressed against the pick-up roller.
- Open the LU door, the coupling of the lift-up motor and paper tray lifting mechanism will be disconnected. Thus, the paper tray will fall down with its own weight, which releases the pressure between the pick-up roller and the paper.
  For details on the linking/release mechanism, see "PE.3.2.2 Paper tray lift-up drive release mechanism".
- The remaining paper detection plate also rotates together with the vertical movement of the paper tray. (The wire in the lift-up axis which is connected to the remaining paper detection plate is wound in the opposite direction)
  For details on the remaining paper detection mechanism, see "PE.3.3.2 Remaining paper detection".

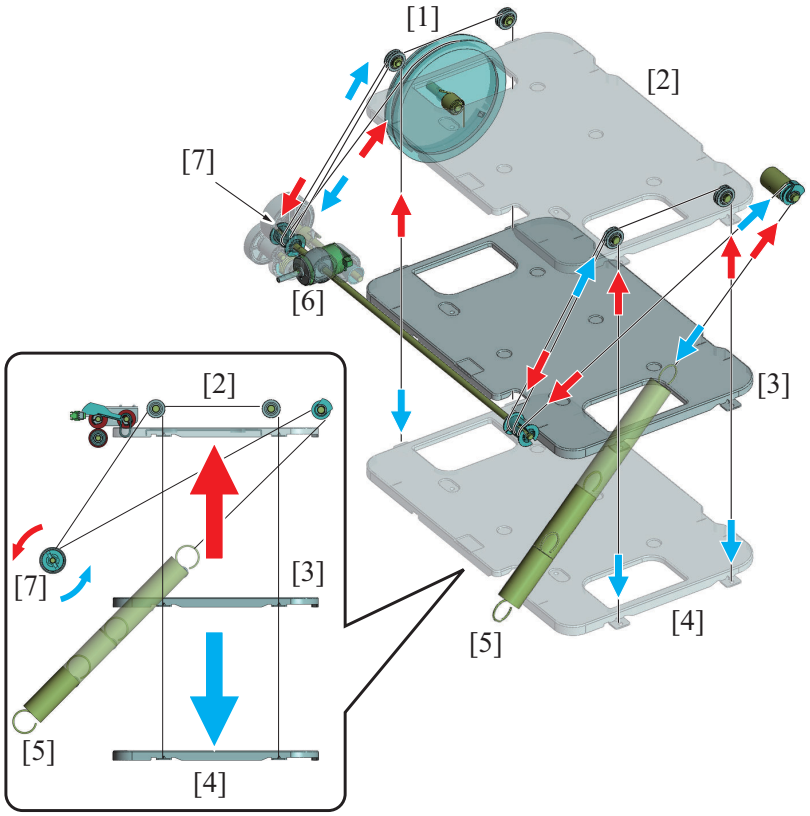


| | | | |
|---|---|---|---|
| [1] | Remaining paper detection plate | [2] | Paper tray (upper limit position) |
| [3] | Paper tray (home position) | [4] | Paper tray (lower limit position) |
| [5] | Drive assist spring | [6] | Lift-up motor (M1) |
| [7] | Lift-up axis | - | - |

### (1) Operation timing

#### (a) When paper is placed

1. The LU door is opened and paper is placed. (The LU door switch detects whether the LU door is closed or not)
2. With the LU door closed, the upper limit sensor signal is checked. When the paper tray is being lowered (upper limit sensor is unblocked), the lift-up motor is rotated and the paper tray lift-up is started.
3. The pick-up roller is pushed up by paper surface that was lifted up. The pick-up roller holder blocks the upper limit sensor, which detects the paper raising up to the upper limit position.
4. If the sensor detects the paper raising up to the upper limit position, the lift-up motor stops to end the lift-up operation of the paper tray.
5. The paper tray is lifted up to the upper limit. However, if the paper empty sensor cannot detect the presence of paper, it determines that the tray is empty. The paper tray remains on standby at the upper limit position. (The paper tray does not fall down. Open the LU door, so that the paper tray will fall down with its own weight.)
   For details on the paper empty detection mechanism, see "PE.3.3.3 Paper empty detection".

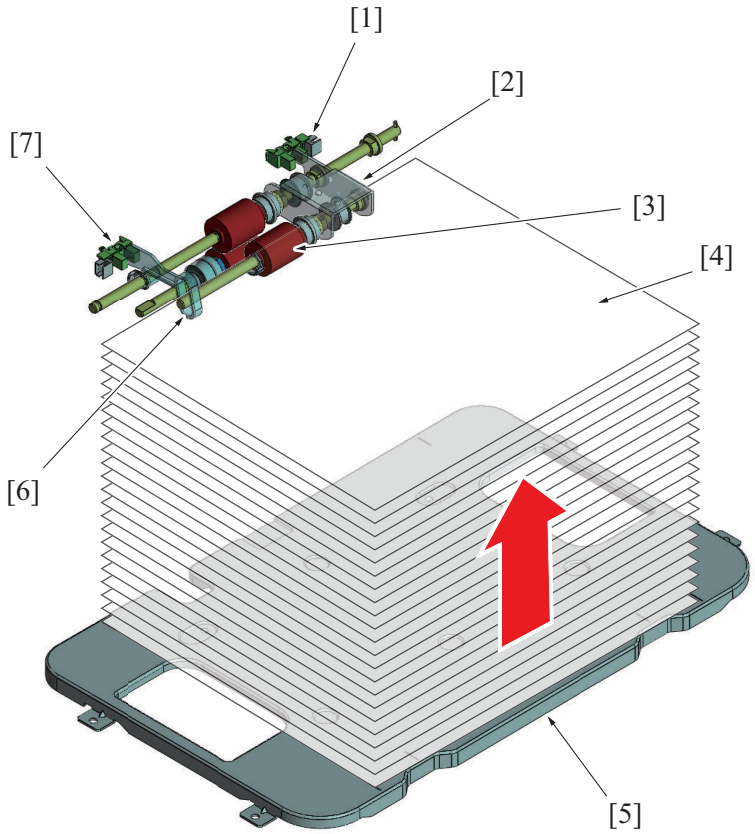


| | | | |
|---|---|---|---|
| [1] | Upper limit sensor (PS2) | [2] | Pick-up roller holder |
| [3] | Pick-up roller | [4] | Paper |
| [5] | Paper tray | [6] | Paper empty sensor actuator |
| [7] | Paper empty sensor (PS4) | - | - |

**(b) During a print cycle**

1. When the amount of paper decreases during a print cycle, the pick-up roller will gradually come down. Thus, the upper limit sensor that was blocked by the pick-up roller holder becomes unblocked.
2. The lift-up motor will rotate again to start lifting up the paper tray.
3. The pick-up roller is pushed up by paper surface that was lifted up. Thus, the pick-up roller holder will block the upper limit sensor.
4. If the upper limit sensor gets blocked, the lift-up motor stops to end the lift-up operation of the paper tray.
5. Repeat above operations, the pressure (paper feed pressure) between the pick-up roller and the paper stack is kept constant regardless of the amount of remaining paper.

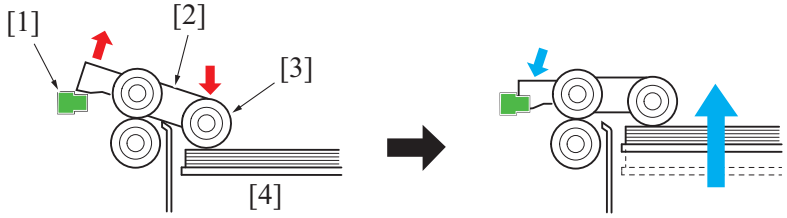


| | | | |
|---|---|---|---|
| [1] | Upper limit sensor (PS2) | [2] | Pick-up roller holder |
| [3] | Pick-up roller | [4] | Paper tray |

### 3.2.2 Paper tray lift-up drive release mechanism

- The paper tray lift-up drive is equipped with a drive release mechanism.
- Release the drive, the paper tray will come down.
- The contact of the pick-up roller on the paper is released when the paper tray comes down.

Rear view

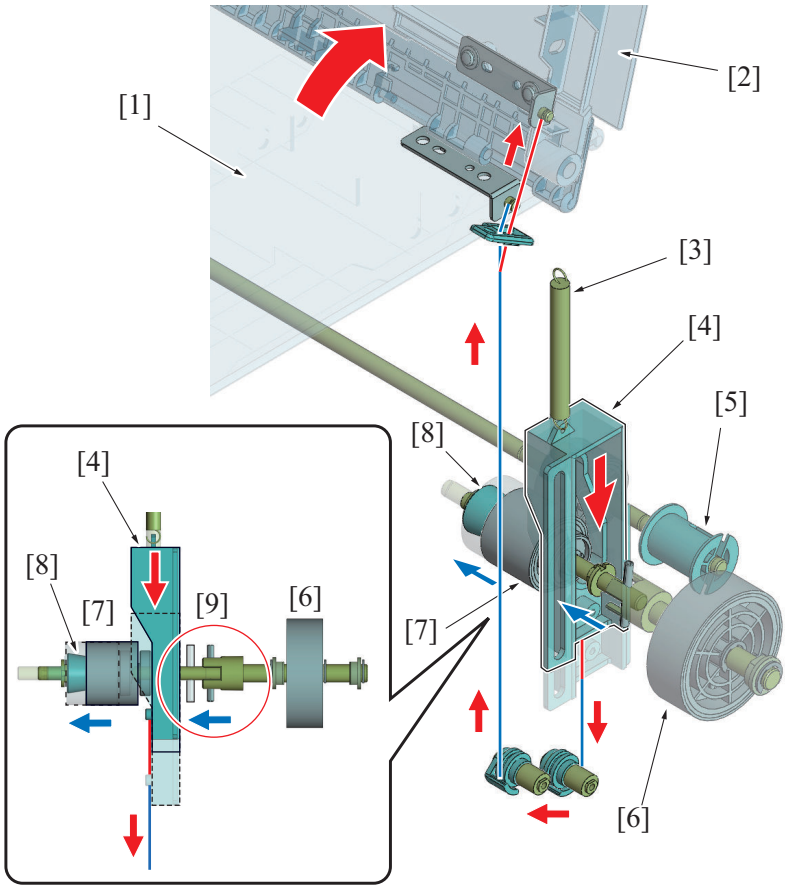


| | | | |
|---|---|---|---|
| [1] | LU door (close) | [2] | LU door (open) |
| [3] | Link release plate spring | [4] | Link release plate |
| [5] | Lift-up axis | [6] | Drive gear |
| [7] | Connecting gear | [8] | Spring |
| [9] | Coupling | - | - |

### (1) Drive release operation

1. The wire linked to the LU door pulls down the link release plate when the door is opened.
2. The link release plate pushes out the link gear towards the front of the machine. It releases the link to the drive gear coupling.
3. Release the lift-up motor driving force, the weight of the load on the paper tray will pull out the wire wound in the lift-up axis. (The lift-up axis rotates on the opposite direction). This movement lowers the paper tray.

### (2) Drive link operation

1. Close the LU door, the spring that is linked to the link release plate will pull up the link release plate.
2. The link gear pushes it back inside the machine through the spring force. It completes the link to the drive gear coupling.
3. For details on the operation after drive link operation, see "Paper tray lifting mechanism".

## 3.2.3 Paper size detection

- The LCT does not have a function to detect the paper size.
- Specify the paper size in [Service Mode] -> [System 2] -> [LCT Paper Size Setting].

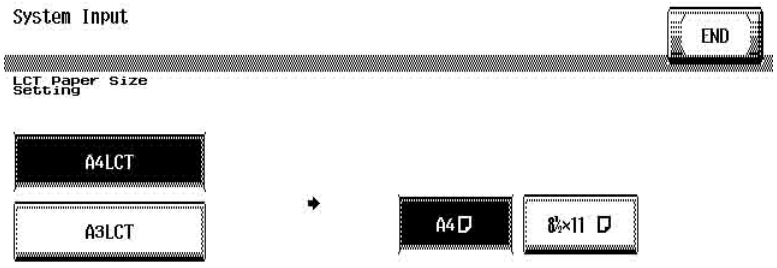


## 3.3 Paper feed/transport section

### 3.3.1 Paper feed and transport control

#### (1) Paper feed control

- The paper feed motor drives the pick-up roller, feed roller and separation roller to take up and feed a sheet of paper into the main body.
- The weight is applied to the pick-up roller holder. The pick-up roller is pressed against the paper by the weight.
- Sheets of paper are separated and fed individually into the machine by the feed roller and separation roller.
- A torque limiter is connected to the separation roller which controls the driving force of the paper feed motor.
- When there is no sheet of paper or only one sheet of paper between the separation roller and feed roller, the limit torque is exceeded and the separation roller follows the rotation of the feed roller.
- If multiple sheets of paper are fed between the separation roller and feed roller, the limit torque gets greater than the frictional force of the paper. Thus, the separation roller rotates reversely. The lower sheets of paper which are in contact with the separation roller are pushed back to the paper tray and separated.

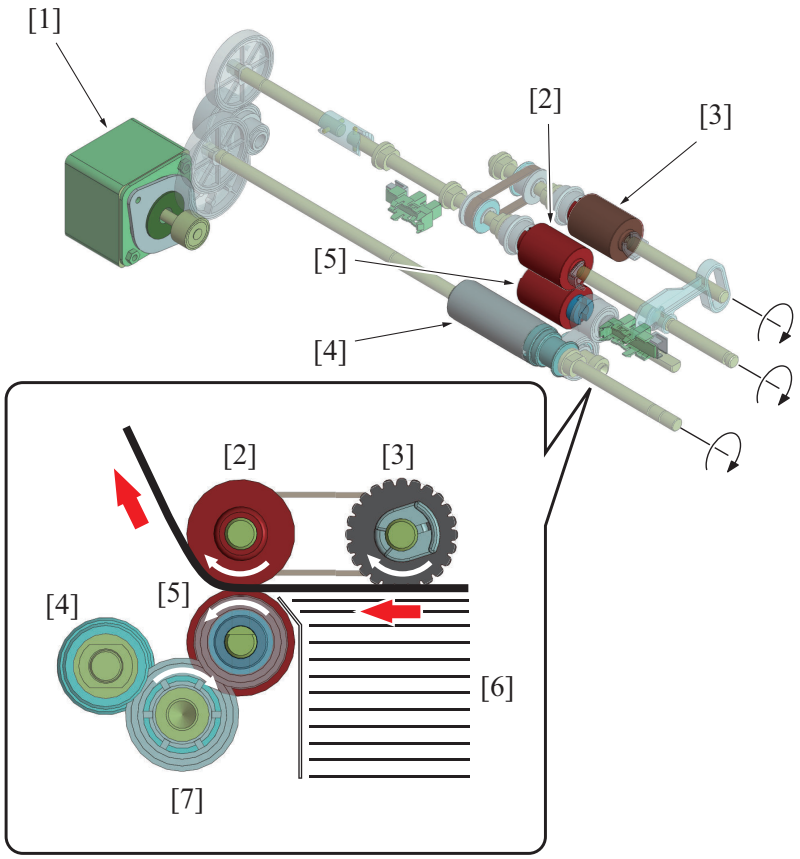


| | | | |
|---|---|---|---|
| [1] | Paper feed motor (M2) | [2] | Feed roller |
| [3] | Pick-up roller | [4] | Torque limiter |
| [5] | Separation roller (Only one sheet of paper in the sample illustration so it is in driven rotation) | [6] | Paper |
| [7] | Drive relay gear | - | - |

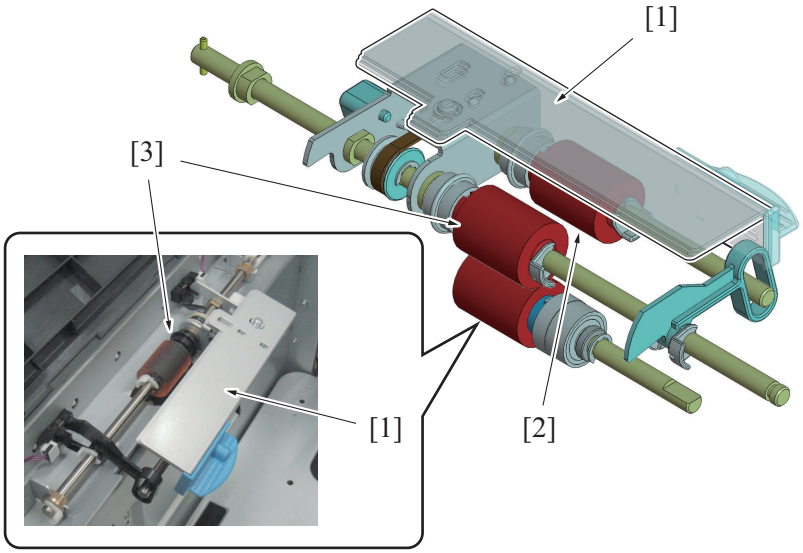


| | | | |
|---|---|---|---|
| [1] | Weight | [2] | Pick-up roller |
| [3] | Feed roller | - | - |

### (2) Paper transport control

- The transport roller is driven following the rotation of the transport motor to transport paper to the paper feeding part of the machine.
- In consecutive print, when the interval between the preceding and following sheets is below the specified value, the LCT transport rollers temporarily stop to ensure a predetermined interval.
- The paper transport speed is faster than the system speed.

Layout of sensors and rollers

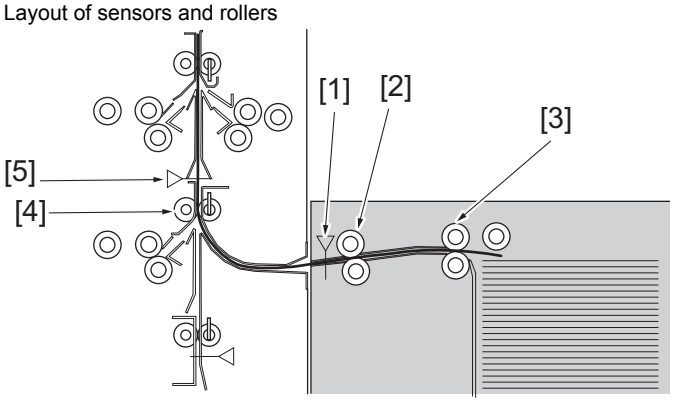


| | | | |
|---|---|---|---|
| [1] | Paper feed sensor (PS3) | [2] | Transport roller |
| [3] | Feed roller | [4] | Tray 2 vertical transport roller |
| [5] | Tray 2 vertical transport sensor | - | - |

### (3) Periodical replacement parts

- The pick-up roller, feed roller, and separation roller are periodical replacement parts. These three rollers must be replaced with new ones at the same time.
- None of the pick-up roller, feed roller, and separation roller is provided with a new article detection mechanism. When the three rollers are replaced with new ones, the “LCT” counter must be reset to zero using “Counter / Life” of the Service Mode.
- The number of times the paper feed unit has been subjected to paper feed operations can be checked with the “LCT” counter of the Service Mode.

| | |
|---|---|
| Periodical replacement cycle | Paper feed operations 300,000 times |

- For details of the applicable replacement procedures for the pick-up roller, feed roller, and separation roller and the Service Mode, see “F. 11.1.1 Replacing the pick-up roller.”

Feed roller/Pick-up roller/Separation roller

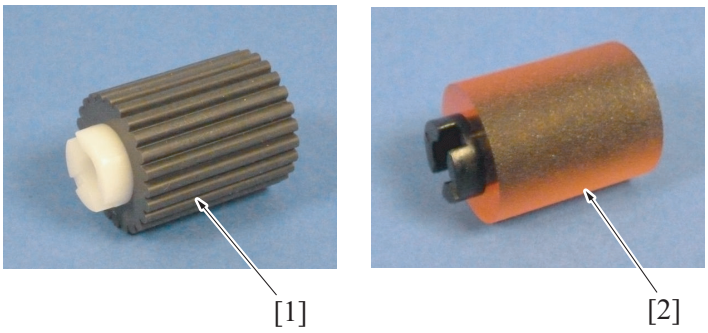

| | | | |
|---|---|---|---|
| [1] | Pick-up roller | [2] | Feed roller/Separation roller |

### 3.3.2 Remaining paper level detection

- The paper tray is equipped with a mechanism which detects the amount of remaining paper.
- The wire in the lift-up axis which is connected to the remaining paper detection plate is wound reversely against the paper tray wire. (If the paper tray wire is wound up the lift-up axis, the same amount of wire is pulled out.)
- A spring is attached to the rotation axis of the remaining paper detection plate. Rotational force is applied in the direction of winding of the wire into the remaining paper detection plate.
- Detection of remaining paper is determined depending on the status of near empty sensors/1 and 2.

Rear view

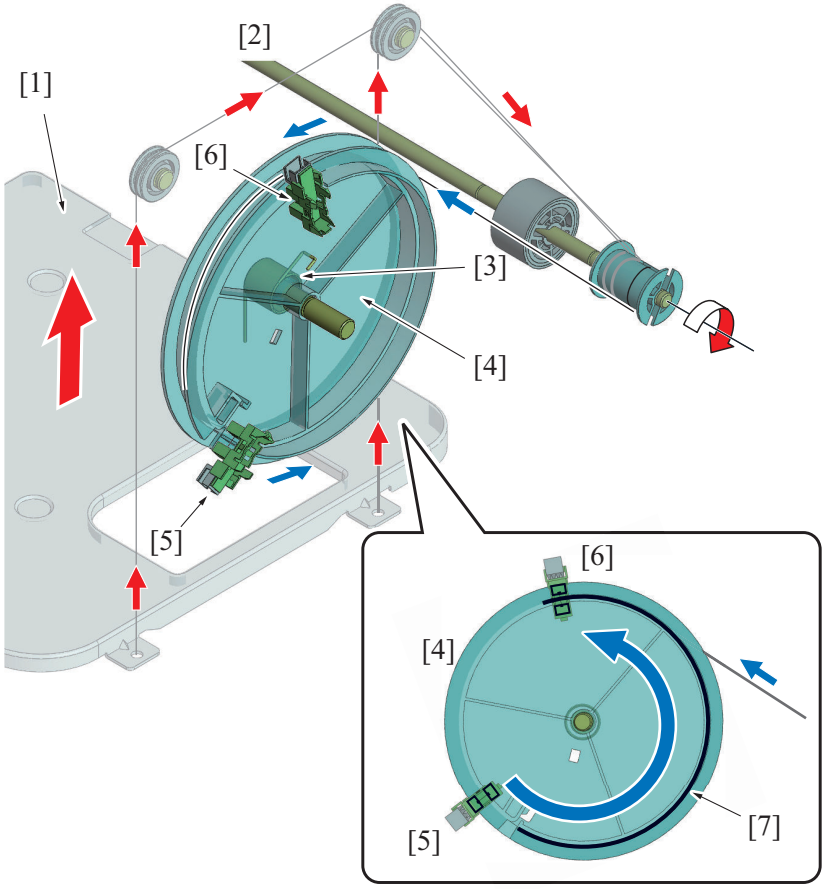


| | | | |
|---|---|---|---|
| [1] | Paper lift-up plate | [2] | Lift-up axis |
| [3] | Spring | [4] | Remaining paper detection plate |
| [5] | Near empty sensor /2 (PS6) | [6] | Near empty sensor /1 (PS5) |
| [7] | Sensor blocking plate | - | - |

#### (1) Remaining paper detection operation

1. If paper on the paper tray is consumed, the lift-up axis is rotated and the paper tray is lifted up.
   For details on the paper tray lift-up control when you are printing, refer to the section describing the paper tray lifting mechanism.
2. If the lift-up axis is rotated in the lift direction of the paper tray, the wire that is connected to the remaining paper detection plate is pulled out from the lift-up axis.
3. The remaining paper detection plate rotates for an amount that the wire is pulled out, and winds up the wire.
4. The remaining paper detection plate is equipped with a blocking plate. The position of the blocking plate changes depending on the rotation amount of the remaining paper detection plate.
   **NOTE**
   - **The sample illustration shows the position of the blocking plate when the tray is full of paper.**
5. The amount of remaining paper is determined depending on the detection status of near empty sensors/1 and 2.
   For details on the remaining paper amount display, see "PE.3.3.4 Remaining paper amount display".

#### (2) Criteria for determining the amount of remaining paper

| Condition | Paper full | Paper near full | Paper present | Paper near-empty |
|---|---|---|---|---|
| Remaining paper level * | 3000 to 2000 sheets | 2000 to 1000 sheets | 1000 to 51 sheets | 50 to 1 sheets *2 |
| Near empty sensor /1 (PS5) | Blocked | Blocked | Unblocked | Unblocked |
| Near empty sensor /2 (PS6) | Unblocked | Blocked | Blocked | Unblocked |

- *1: Reference value when plain paper is placed

- *2: The accuracy of the determination of the near empty number is 50 sheets ± 20 sheets.

### 3.3.3 Paper empty detection

- The paper empty sensor detects the paper empty.
- The absence of paper is determined when the paper tray is raised up to the upper limit position. (The upper limit sensor detects the upper limit position of the paper tray.)
  For details on the paper tray upper limit position, see "PE.3.2.1 Paper tray lifting mechanism".

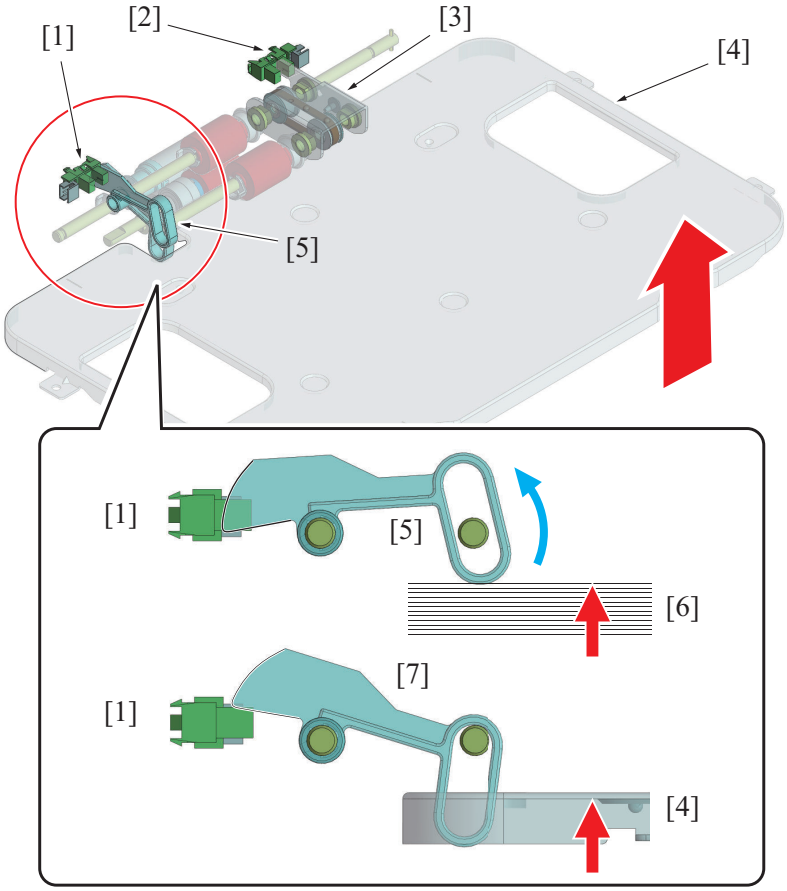


| | | | |
|---|---|---|---|
| [1] | Paper empty sensor (PS4) | [2] | Upper limit sensor (PS2) |
| [3] | Pick-up roller holder | [4] | Paper tray |
| [5] | Actuator (paper present) | [6] | Paper |
| [7] | Actuator (paper tray empty) | - | - |

#### (1) When paper is left on the paper tray

1. If the paper tray is raised up to the upper limit position, the actuator is pushed up by the top of the paper.
2. If the actuator blocks the paper empty sensor, the sensor determines that paper is remaining on the tray.

#### (2) When no paper is left on the paper tray

1. Since the paper tray has a notch, the actuator does not move from the paper empty position even if the paper tray is raised up to the upper limit position.
2. If the paper empty sensor remains unblocked, it determines that there is no paper left (paper empty).
3. When paper empty is detected, the paper tray stays at the upper limit position. (The tray does not fall down. Open the LU door, the tray will fall down automatically to the home position under its own weight.)

### 3.3.4 Remaining paper display

- An LED on the front right side displays the amount of remaining paper.
- The following table shows display statuses.

| Paper feed port status | Empty | Near empty | Not empty, Not near empty, Currently on lift-up |
|---|---|---|---|
| LED status | Lit | Blinking | Unlit |




| | | | |
|---|---|---|---|
| [1] | Tray LED display | - | - |

## 3.4 Dehumidifier heater section

### 3.4.1 Dehumidifier mechanism (TK-101/MK-719)

- This machine is equipped with a standard dehumidifier heater.

#### (1) Configuration

To make use of the function of the dehumidifier heater, the following combined optional equipment is required.

- Transformer kit TK-101
- Power Supply BOX MK-734
- Paper feed cabinet PC-110, PC-210, or PC-410.

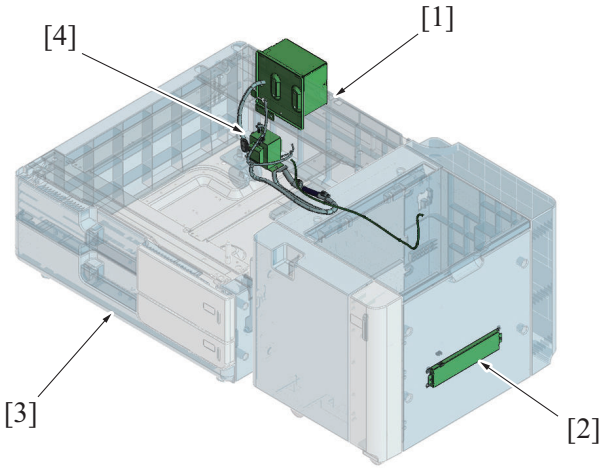


| | | | |
|---|---|---|---|
| [1] | Dehumidifier heater (DH): Standard equipment | [2] | Paper feed cabinet PC-110/PC-210/PC-410 or the desk DK-510 |
| [3] | Transformer kit TK-101 | [4] | Power Supply BOX MK-734 |

#### (2) Function

- The dehumidifier heater generates heat when it is energized, which prevents the paper in the large capacity paper feed unit from absorbing the moisture. It prevents paper curling, paper misfeeds, paper jams, and abnormal images that occur when paper absorbs the moisture.

#### (3) Control

- Turn on the dehumidifier heater switch on the power supply box MK-734 to perform humidity control.
- Turn off the dehumidifier heater switch to stop humidity control.

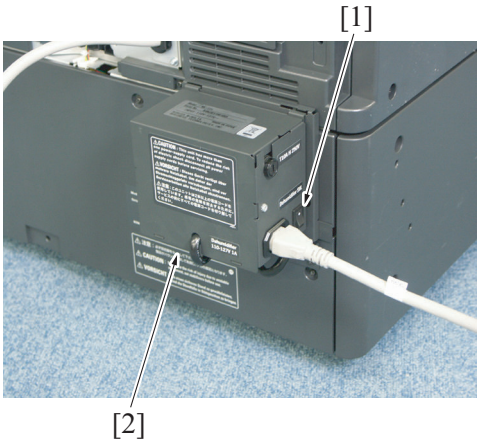


| | | | |
|---|---|---|---|
| [1] | Dehumidifier heater switch | [2] | Power Supply BOX MK-734 |

### (a) Operation timing

- If the machine is stopped*, the dehumidifier heater is energized and generates heat.
- When the machine starts normally, it stops energizing the dehumidifier heater.

**NOTE**

- ***: When the covers are opened, a problem or paper jam occurs, or in power-saving mode.**

# PF THEORY OF OPERATION JS-506

## 1. OVERVIEW OF THE SEPARATOR

- The separator JS-506 is installed to the MFP to enable both "exit tray 1" and "exit tray 2" to use. So you can exchange the paper exit port.
- Tray 2 has a shift mechanism and a sorting function can be added.

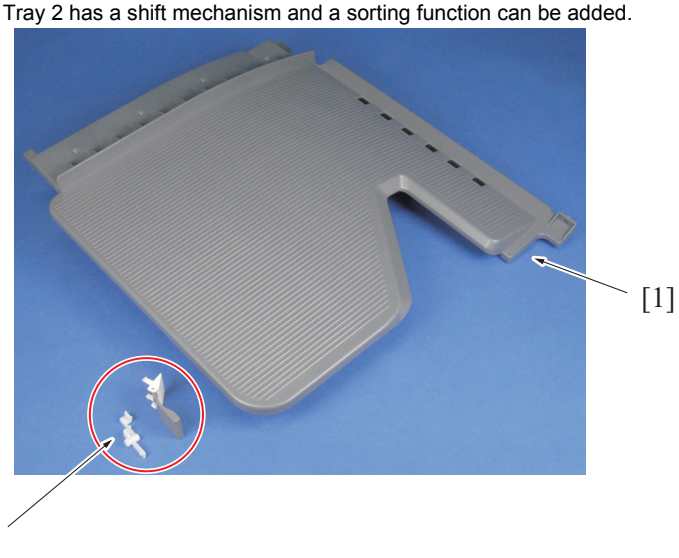


| | | | |
|---|---|---|---|
| [1] | Exit tray 1 | [2] | Exit tray 1 paper stopper |




| | | | |
|---|---|---|---|
| [1] | Sensor assy | [2] | Exit tray 2 |

**NOTE**

- **Do not use the "Exit tray 1 paper stopper" supplied with JS-506 in bizhub C368/C308/C258.**

NOTICE

- D.1.1 System configuration
- C.7. JS-506

# 2. PAPER PATH

## 2.1 Paper feed to the exit tray

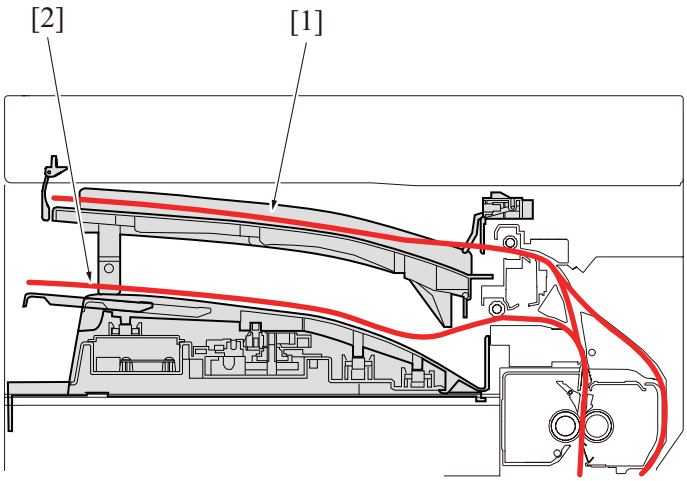


| | | | |
|---|---|---|---|
| [1] | Paper feed to the exit tray 1 | [2] | Paper feed to the exit tray 2 |

# 3. CONFIGURATION

## 3.1 Section configuration

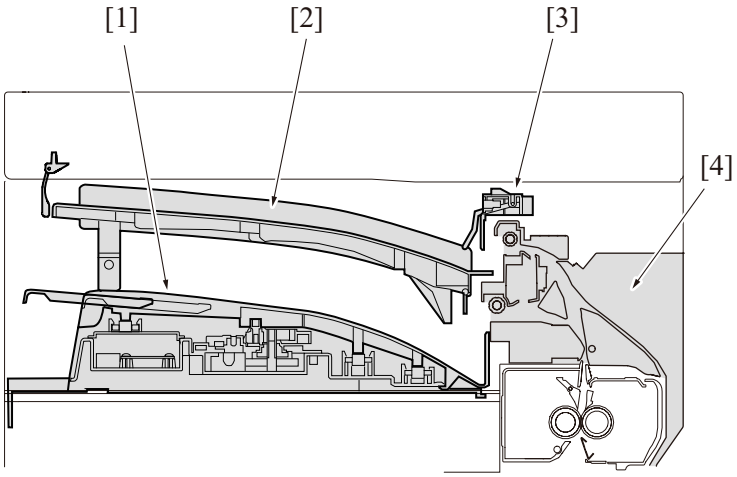


| | | | |
|---|---|---|---|
| [1] | Exit tray 2 | [2] | Exit tray 1 |
| [3] | Sensor assy (exit tray 1) | [4] | Paper exit/reverse section at the main body * |

- *: The unit shape and part configuration are changed when the JS-506 is installed to the MFP.

## 3.2 Main electrical part configuration

- JS-506 has the exit tray 1 (upper) and the exit tray 2 (lower).
- JS-506 does not have the paper transport function and only has the shift function.

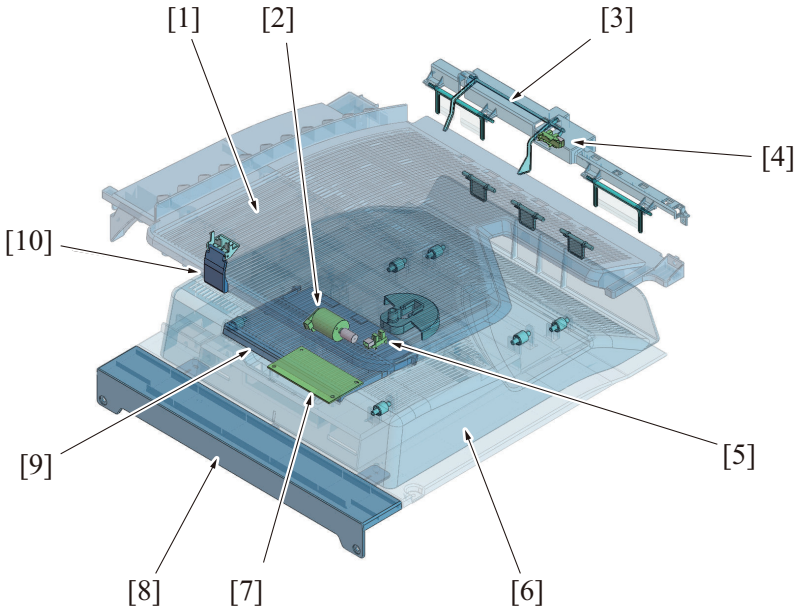


| | | | |
|---|---|---|---|
| [1] | Exit tray 1 (upper) | [2] | Tray shift motor (M1) |
| [3] | Exit tray 1 full detection lever | [4] | Exit tray1 full sensor (PS2) |
| [5] | Tray shift home sensor (PS1) | [6] | Exit tray 2 (lower) |
| [7] | JS control board (JSCB) | [8] | Separator cover |
| [9] | Extension tray | [10] | Exit tray 1 paper stopper * |

- *: Not used in bizhub C368/C308/C258.

# 4. DRIVE

## 4.1 Paper transport drive mechanism for exit tray 1

- A reverse roller on the MFP main unit side transports paper to the exit tray 1.

**NOTE**

- **Refer to MFP paper exit/reverse unit for details on the drive mechanism for the reverse roller.**

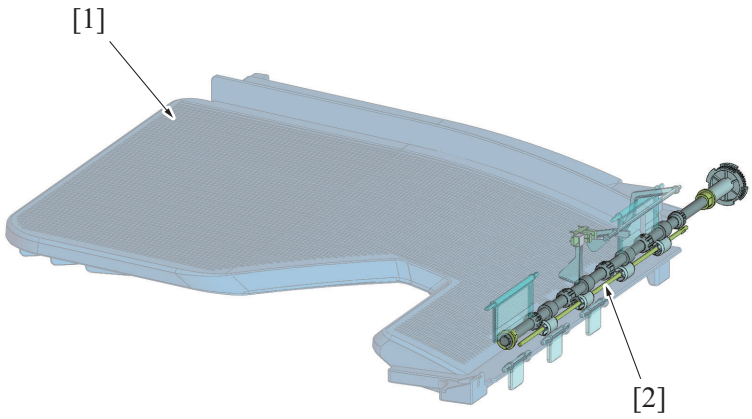


| | | | |
|---|---|---|---|
| [1] | Exit tray 1 | [2] | Switchback roller (MFP main body; paper exit/reverse section) * |

- *: The roller shape, roller configuration, and drive method is changed when the JS-506 is installed to the MFP.

## 4.2 Paper transport drive mechanism for exit tray 2

- A reverse roller on the MFP side transports paper to the exit tray 2.

**NOTE**

- **Refer to MFP paper exit/reverse unit for details on the drive mechanism for the exit roller.**

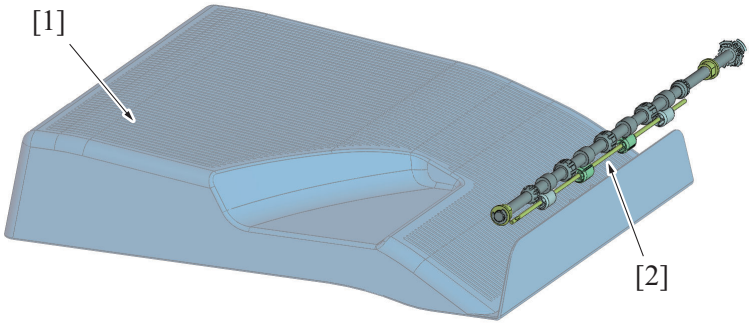


| | | | |
|---|---|---|---|
| [1] | Exit tray 2 | [2] | Exit roller (MFP main body; paper exit/reverse section) * |

- *: The roller shape, roller configuration, and drive method is changed when the JS-506 is installed to the MFP.

## 4.3 Exit tray 2 shift mechanism

- A shift tray motor conducts shift drive of the exit tray 2.

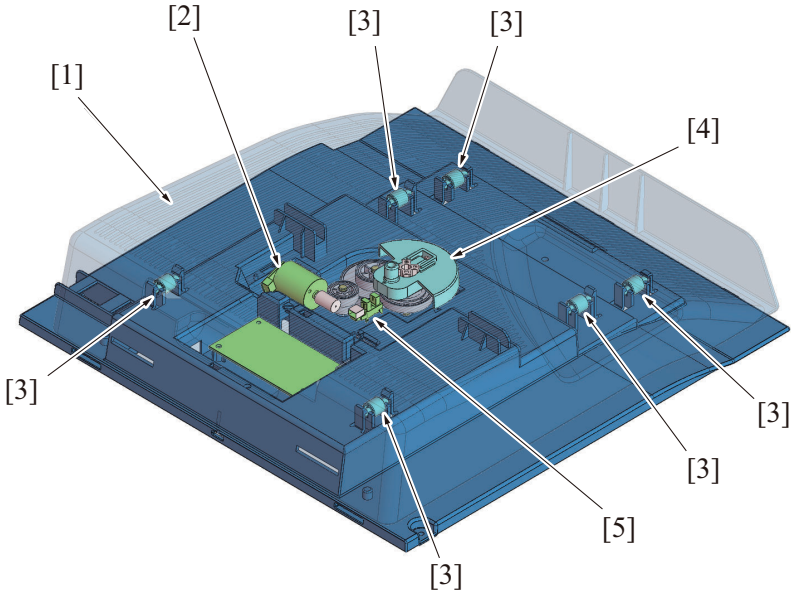


| | | | |
|---|---|---|---|
| [1] | Exit tray 2 | [2] | Tray shift motor (M1) |
| [3] | Exit tray support rolls (6 points) | [4] | Shift control actuator |

| | | | |
|---|---|---|---|
| [5] | Tray shift home sensor (PS1) | - | - |

# 5. OPERATION

## 5.1 Exit tray 1

### 5.1.1 Paper transport

- The JS-506 exit tray 1 does not have a paper transport mechanism. Paper transport is performed by a reverse roller in the MFP.
- The paper exit/reverse switch gate is switched to the reverse roller side when the paper is transported to the reverse roller.
- The reverse roller stops after the predetermined period of time when the exit sensor on the main body detects the trailing edge of the last paper.

**NOTE**

- **The paper exit/reverse unit mechanism and control details are changed when the JS-506 is installed to the MFP.**

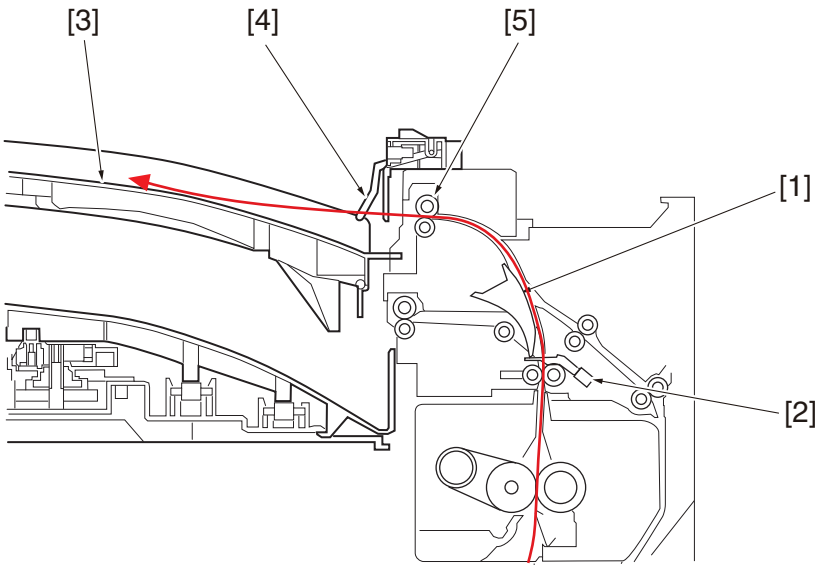


| | | | |
|---|---|---|---|
| [1] | Paper exit/reverse switch gate (reverse roller side) | [2] | Paper exit sensor (main body: PS3) |
| [3] | Exit tray 1 | [4] | Exit tray 1 full detection lever |
| [5] | Reverse roller (main body) | - | - |

### 5.1.2 Paper full detection

- The exit tray 1 has the exit tray 1 full sensor which detects paper full.
  The sensor detects paper full with either 100 sheets of plain paper or stack height of 22.5 mm or less.
  C.7.3 Capacity

**NOTE**

- **Paper may curl depending on the type of paper and the temperature and humidity of the room where the device is installed. The stacked sheets may be reduced depending on the amount of paper curl.**

#### (1) Paper not present

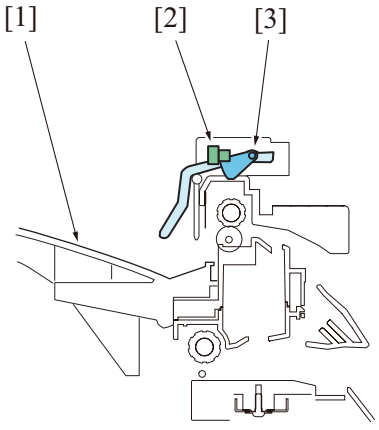


| | | | |
|---|---|---|---|
| [1] | Exit tray 1 | [2] | Exit tray1 full sensor (PS2) |
| [3] | Exit tray 1 full detection lever: unblocked | - | - |

**(2) Paper full**

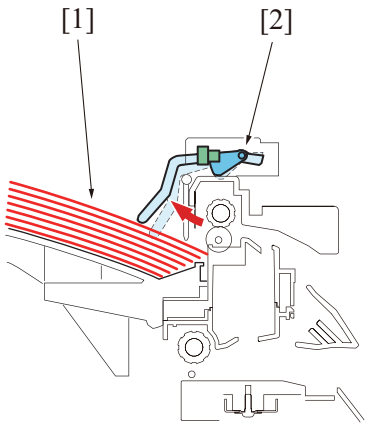


| | | | |
|---|---|---|---|
| [1] | Paper | [2] | Exit tray 1 full detection lever: blocked |

## 5.2 Exit tray 2

### 5.2.1 Paper transport

- The JS-506 exit tray 2 does not have a paper transport mechanism. Paper transport is performed by a paper exit roller in the MFP.
- The paper exit/reverse switching gate does not move, since it is in the default position (paper exit roller side).
- The paper exit roller stops after the predetermined period of time when the paper exit sensor on the main body detects the trailing edge of the last paper.

**NOTE**

- **The paper exit/reverse unit mechanism and control details are changed when the JS-506 is installed to the MFP.**

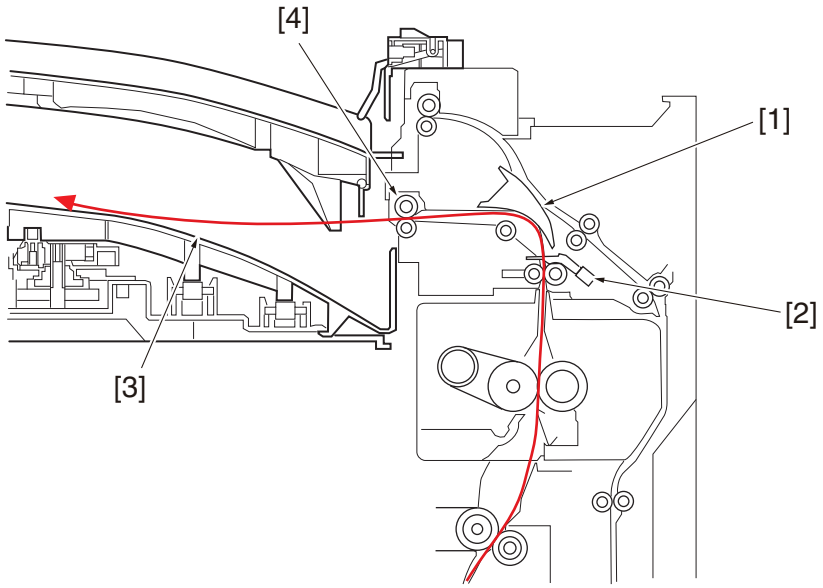


| | | | |
|---|---|---|---|
| [1] | Paper exit/reverse switch gate (exit roller side) | [2] | Paper exit sensor (main body: PS3) |
| [3] | Exit tray 2 | [4] | Exit roller |

### 5.2.2 Paper shift mechanism

- Move paper alternately between the front side and the rear side of the exit tray 2 to sort paper.
- The shift mechanism operates when the "Shift output each job" is selected in default setting or when the offset function is selected on the control panel.
- The tray shift home sensor detects the home position for the exit tray 2.
- The exit tray 2 shifts to the home position when the power is on and the printing starts for the 1st job.
- Repeatedly move the paper between the rear side and front side of the exit tray 2 to sort paper in the exit tray 2.

### (1) Exit tray 2: Home position

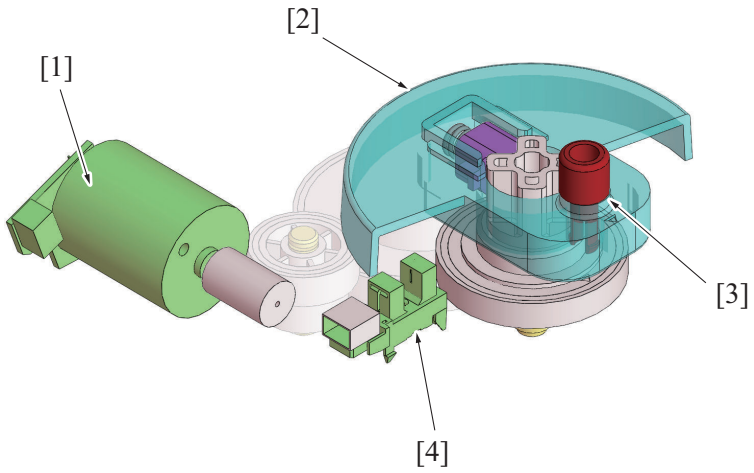


| | | | |
|---|---|---|---|
| [1] | Tray shift motor (M1) | [2] | Shift control actuator |
| [3] | Tray shift projection: Home position (front side of the exit tray 2) | [4] | Tray shift home sensor (PS1): unblocked |

### (2) Exit tray 2: shift position

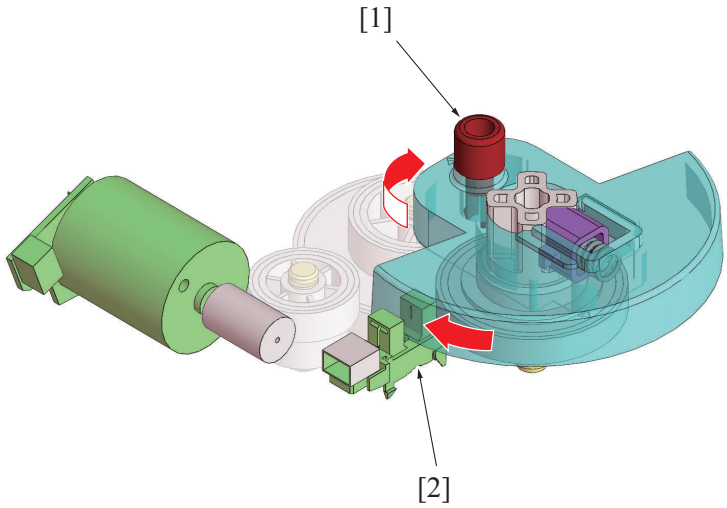


| | | | |
|---|---|---|---|
| [1] | Tray shift projection: Shift position (rear side of the exit tray 2) | [2] | Tray shift home sensor (PS1): blocked |

### (3) Outline of exit tray 2 shift operation

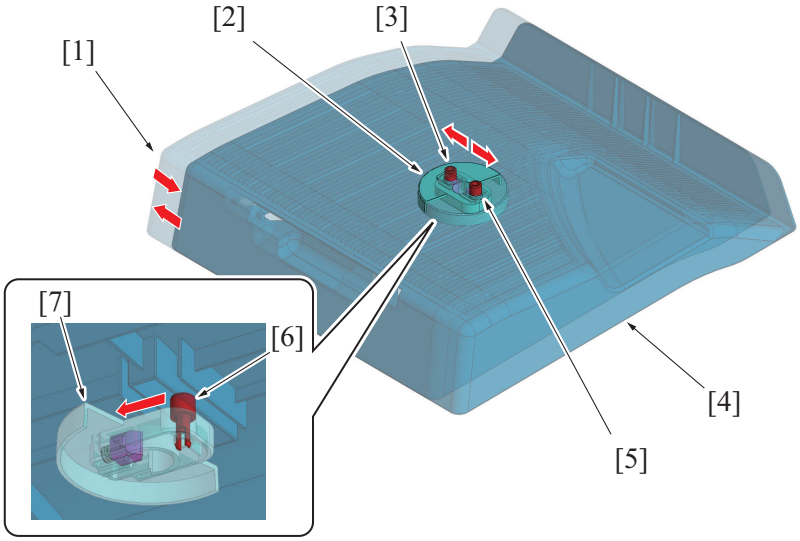


| | | | |
|---|---|---|---|
| [1] | Exit tray 2: shift position (rear side) | [2] | Shift control actuator |
| [3] | Tray shift projection: shift position | [4] | Exit tray 2: home position (front side) |

| | | | |
|---|---|---|---|
| [5] | Tray shift projection: Home position | [6] | Tray shift projection: Home position (exit tray 2, bottom view) |
| [7] | Shift control actuator (exit tray 2, bottom view) | - | - |

### 5.2.3 Paper full detection

- The exit tray 2 does not have a paper full detection mechanism. If the exited paper exceeds the maximum number of stacked sheets, it may cause paper to spill out from the exit tray or jam.
  The maximum number of sheets stacked for the exit tray 2 is 150 sheets for plain paper.
  C.7.3 Capacity

**NOTE**

- **Pay attention not to make paper in the exit tray exceed the maximum number of stacked sheets when large number of sheets is printed continuously.**
- **Paper may curl depending on the type of paper and the temperature and humidity of the room where the device is installed. The stacked sheets may be reduced depending on the amount of paper curl.**

#### (1) Extension tray

- An extension tray is installed to the rear end of the exit tray 2 to accommodate large-sized paper (A3, ledger paper, and so on).
- Make sure to pull out the extension tray before the printing of large-sized paper.

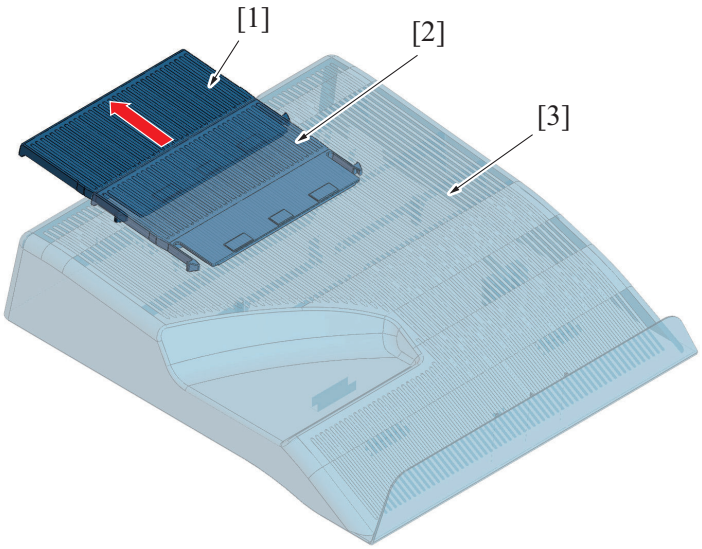


| | | | |
|---|---|---|---|
| [1] | Extension tray: Used for printing large-sized paper | [2] | Extension tray: Used for printing small-sized paper |
| [3] | Exit tray 2 | - | - |

# PG THEORY OF OPERATION FS-533/PK-519

## 1. FINISHER OUTLINE

- Install the staple finisher FS-533 to the MFP to enable the following functions. "Sort function, Sort offset function", "Group function, Group offset function", "Staple function" and "Sort staple function" can be added.
- The "Punch function" can be added by installing the optional function (Punch Kit PK-519).

| Option | Summary of the additional functions |
|---|---|
| PK-519 | Punch function |

NOTICE

- D.1.1 System configuration
- C.8. FS-533
- C.9. PK-519

# 2. PAPER PATH

## 2.1 Sort offset mode/Group offset mode/Staple mode/Punch mode

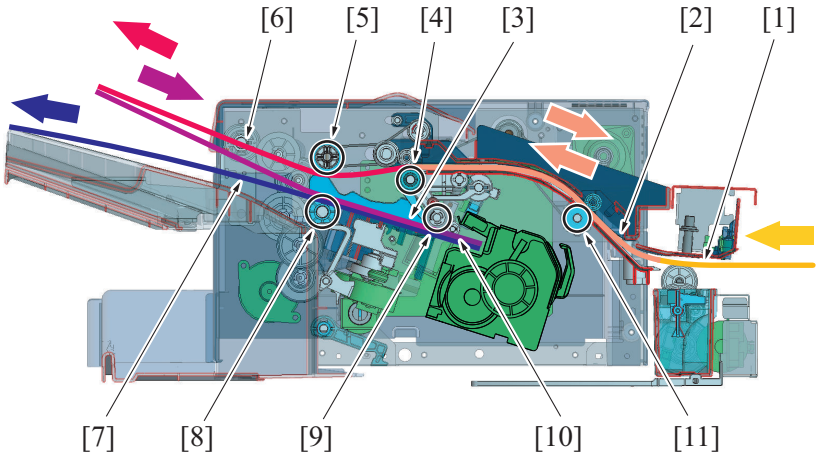


| | | | |
|---|---|---|---|
| [1] | Paper transport/Paper punching (punch mode) | [2] | Paper transport/Skew correction (punch mode) |
| [3] | Paper alignment (Sort/Sort offset mode, Group/Group offset mode, Staple mode) | [4] | Receiving roller |
| [5] | Paper exit roller/upper | [6] | Paper transport |
| [7] | Paper batch exit (Sort/Sort offset mode, Group/Group offset mode, Staple mode) | [8] | Paper exit roller/lower |
| [9] | Alignment roller | [10] | Staple (staple mode) |
| [11] | Paper conveyance roller | - | - |

## 2.2 Non sort mode/Non group mode/Non staple mode/Sort mode/Group mode/Punch mode

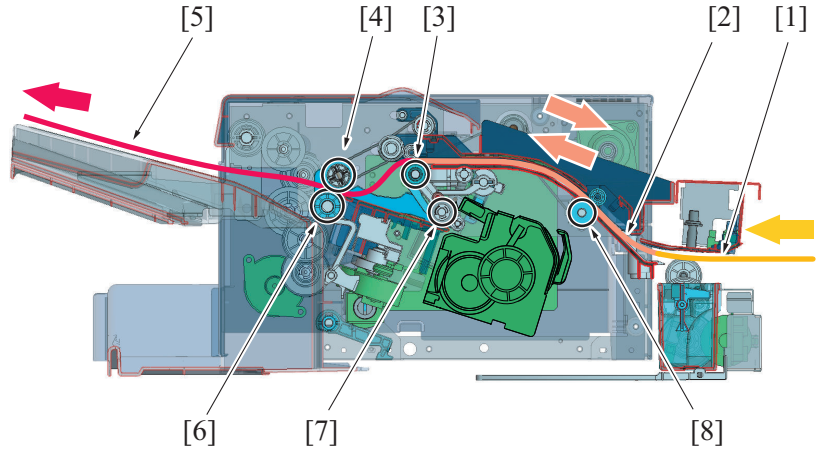


| | | | |
|---|---|---|---|
| [1] | Paper transport/Paper punching (punch mode) | [2] | Paper transport/Skew correction (punch mode) |
| [3] | Receiving roller | [4] | Paper exit roller/upper |
| [5] | Paper exit | [6] | Paper exit roller/lower |
| [7] | Alignment roller | [8] | Paper conveyance roller |

# 3. CONFIGURATION

## 3.1 Section configuration

- The staple finisher FS-533 has the finisher main unit that is installed on the paper exit section of the MFP.
- Slide out the finisher from the MFP for maintenance and other operations. Slide out the finisher main unit to access the finisher operation section and the punch kit. (only when the optional punch kit kit is installed)
- The staple finisher has the sort/group mechanism and the staple mechanism as standard. The optional punch kit PK-519 can be installed between the right face of the finisher and the paper exit section of the main body.

### 3.1.1 Exterior view

Finisher FS-533

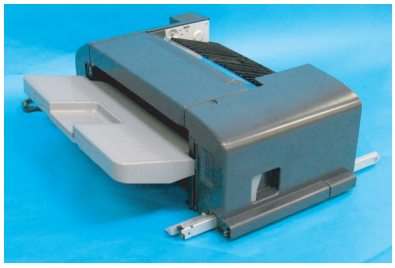

Punch kit PK-519

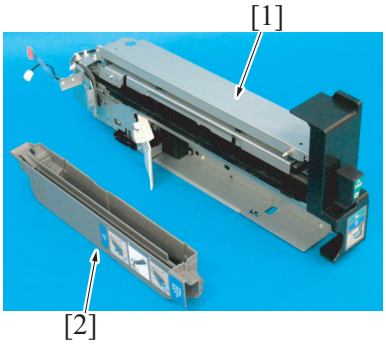


| | | | |
|---|---|---|---|
| [1] | Punch kit PK-519 | [2] | Punch dust box |

FS-533 + PK-519 installation diagram (installation example)



FS-533 + PK-519 sliding state (installation example)

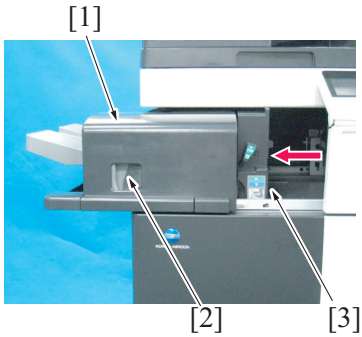


| | | | |
|---|---|---|---|
| [1] | Finisher FS-533 | [2] | Finisher release lever |
| [3] | Punch kit PK-519 | - | - |

FS 533 + PK-519 operation section

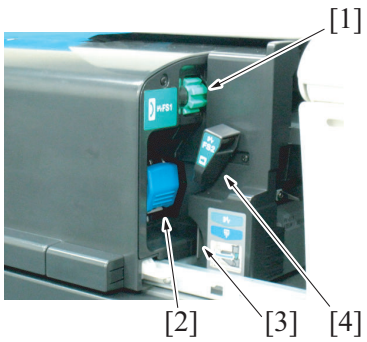


| | | | |
|---|---|---|---|
| [1] | Jam removal dial | [2] | Staple cartridge |
| [3] | Punch dust box | [4] | Punch unit release lever |

### 3.1.2 Section configuration

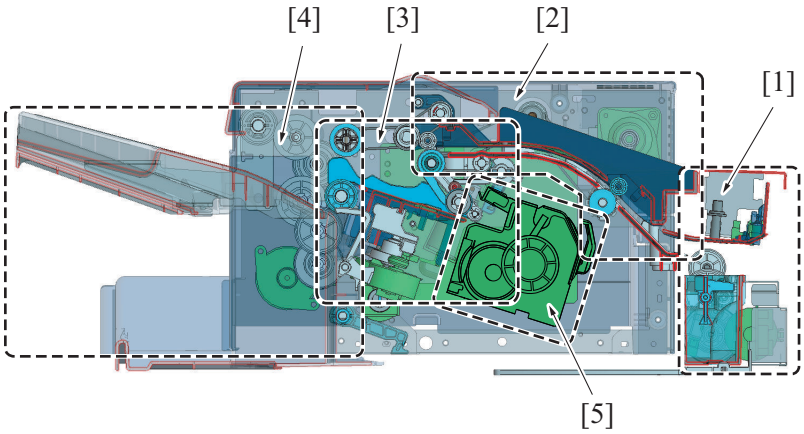


| | | | |
|---|---|---|---|
| [1] | Punch section (only when punch kit PK-519 is installed) | [2] | Transport section |
| [3] | Alignment section | [4] | Receiving section |
| [5] | Staple section | - | - |

## 3.2 Electrical part configuration

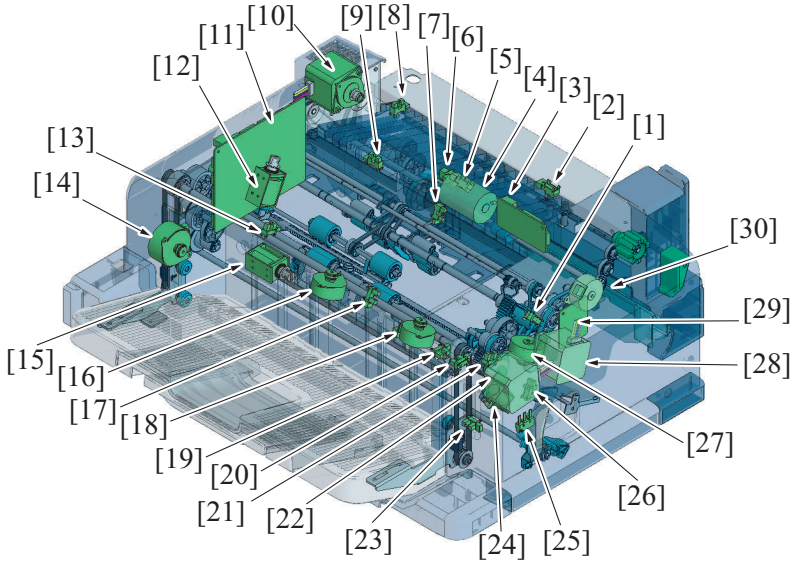


| | | | |
|---|---|---|---|
| [1] | Pick up roller position sensor (PS105) | [2] | Paper feed sensor (PS201): Punch kit |
| [3] | PK control board (PKCB): Punch kit | [4] | Punch motor (M201): Punch kit |
| [5] | Punch dust full sensor (PS205): Punch kit | [6] | Punch motor sensor (PS202): Punch kit |
| [7] | Paper feed sensor (PS101) | [8] | Puncher home sensor (PS204): Punch kit |
| [9] | Puncher drive cam sensor (PS203): Punch kit | [10] | Paper conveyance motor (M101) |
| [11] | FS control board (FSCB) | [12] | Batch solenoid (SD102) |
| [13] | Alignment plate home sensor/R (PS109) | [14] | Tray lift up motor (M109) |

| | | | |
|---|---|---|---|
| [15] | Paper surface detect solenoid (SD101) | [16] | Alignment motor/R (M106) |
| [17] | Paper surface detect sensor/1 (PS102) | [18] | Alignment motor/F (M105) |
| [19] | Paper weight lever sensor (PS103) | [20] | Paper surface detect sensor/2 (PS104) |
| [21] | Alignment plate home sensor/F (PS108) | [22] | Exit roller lift up motor (M104) |
| [23] | Paper exit tray home sensor (PS107) | [24] | Paper exit roller solenoid (SD103) |
| [25] | Finisher lock switch (SW1) | [26] | Stapler home sensor (PS110) |
| [27] | Stapler movement motor (M107) | [28] | Paper exit motor (M102) |
| [29] | Stapler relay board (STREYB) | [30] | Alignment roller motor (M103) |

## 3.3 Main mechanical part configuration

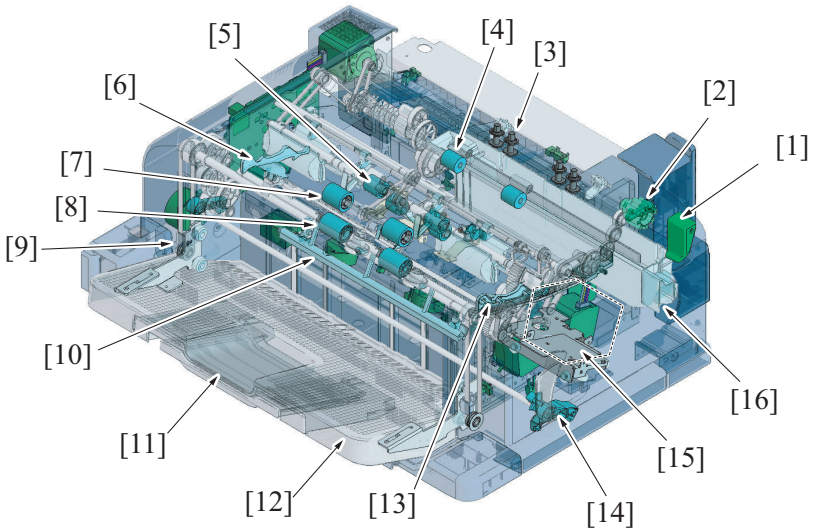


| | | | |
|---|---|---|---|
| [1] | Punch kit release lever: Punch kit | [2] | Jam removal dial |
| [3] | Puncher *: Punch kit | [4] | Paper conveyance roller |
| [5] | Receiving roller | [6] | Alignment plate/Rr |
| [7] | Paper exit roller/upper | [8] | Paper exit roller/lower |
| [9] | Tray lifter | [10] | Paper surface detect lever |
| [11] | Sub tray | [12] | Paper exit tray |
| [13] | Alignment plate/Fr | [14] | Finisher release lever |
| [15] | Stapler | [16] | Punch dust box |

- *: The number of punchers differs depending on the type of the punch kit. For details, see "PG.5.1.1 Punch kit type".

## 3.4 Main roller configuration

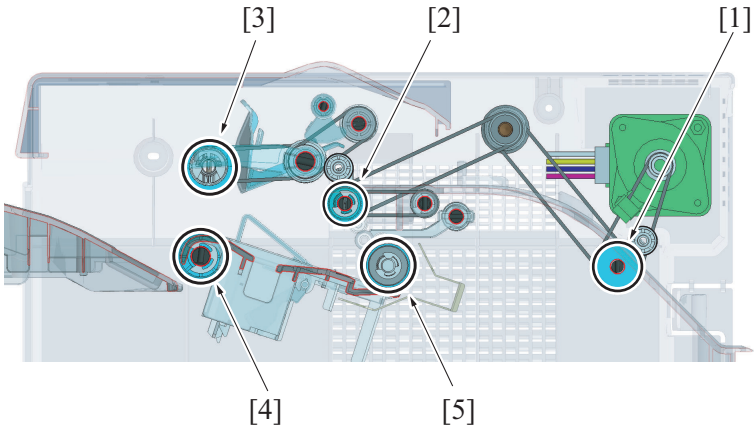


| | | | |
|---|---|---|---|
| [1] | Paper conveyance roller | [2] | Receiving roller |
| [3] | Paper exit roller/upper | [4] | Paper exit roller/lower |
| [5] | Alignment roller | - | - |

# 4. UNIT OPEN/CLOSE SECTION

## 4.1 Unit lock mechanism

- The finisher (FS-533) and punch kit (PK-519) are provided in the each unit lock mechanism.

Overall view

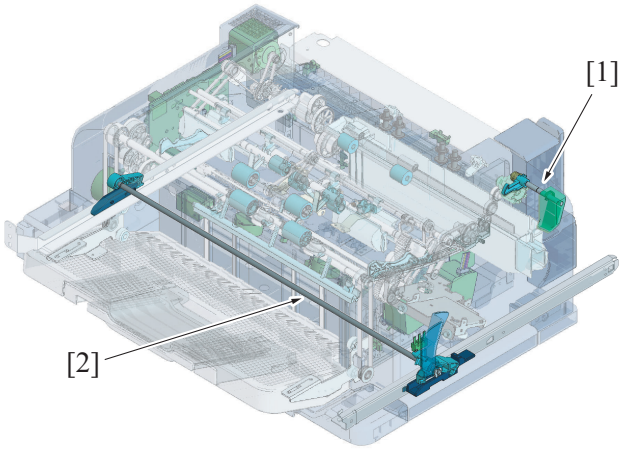


| | | | |
|---|---|---|---|
| [1] | Punch unit lock mechanism | [2] | Finisher unit lock mechanism |

### 4.1.1 Finisher unit lock mechanism

- Releasing the finisher release lever at the front side of the finisher releases the locking claws at the front and rear sides of the finisher from the finisher slide rail. The finisher and the MFP will be disconnected to enable the finisher to slide to the left.
- When the finisher is slid, the finisher lock switch turns off to detect that the finisher is opened.
- When the finisher is detected to be opened, the warning message will be displayed on the screen to inform that the unit is open. Following jobs will then be prohibited.
- Closing the finisher releases the warning screen to releases the job prohibition.

Front view

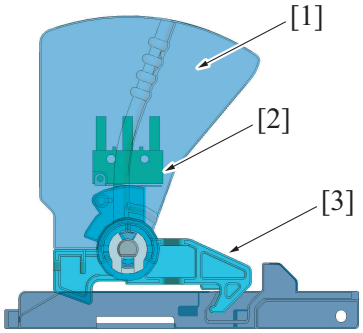


| | | | |
|---|---|---|---|
| [1] | Finisher release lever | [2] | Finisher lock switch (SW1) |
| [3] | Lock claw | - | - |

### 4.1.2 Punch unit lock mechanism (PK-519)

- When the finisher is opened, the release lever for the punch unit will be exposed. (only when the optional punch kit PK-519 is installed)
- The punch unit does not have a mechanism to detect open/close of the unit.

**NOTE**

- **The function to detect open/close of the punch unit is not installed since the finisher needs to be opened to open the punch unit.**

Front view

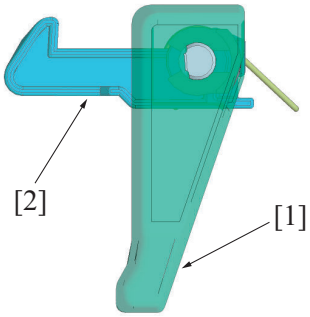


| | | | |
|---|---|---|---|
| [1] | Punch unit release lever | [2] | Lock claw |

# 5. PUNCH SECTION (PK-519)

## 5.1 Configuration

- The punch function can be added to the finishing mode by installing the optional punch kit PK-519 to the finisher FS-533.
- At the punch section, the paper that is transported from the MFP paper exit section is punched when it is fed into the finisher.
- When punching the holes on the paper, the paper transported to the transport section will be switchbacked to the punch section to correct the paper skew before punching the holes. Punching is conducted paper by paper. The punched paper will be transported from the punch section to the transport section.
- When the number of punch holes is not commanded at "Finishing", the paper will be transported to inside the finisher without switchback of the paper and punching.
- 2 hole/3 hole punch kits as well as 2 hole/4 hole punch kits have mechanisms to switch the number of punch holes.
  **NOTE**
  - **2 holes punch kit and 4 holes punch kit do not have the function to switch the number of punch holes.**
  - **"Finishing" cannot be selected using a different punch kit. (Example: Three holes punch mode cannot be selected when the 4 holes punch kit is installed.)**

- Punch dust generated by punching is received in the punch dust box.

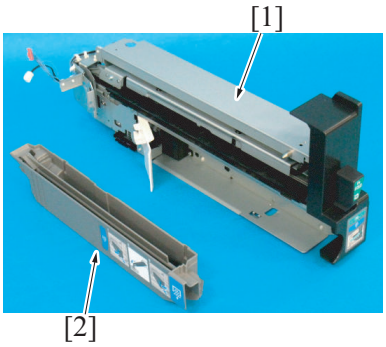


| | | | |
|---|---|---|---|
| [1] | Punch unit | [2] | Punch dust box |

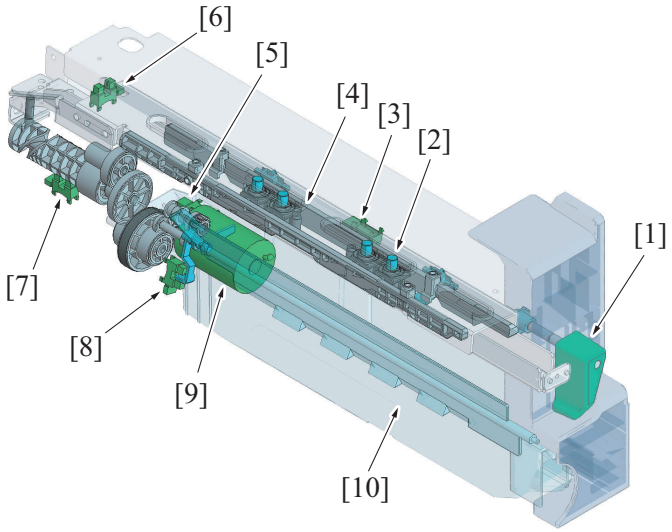


| | | | |
|---|---|---|---|
| [1] | Punch unit release lever | [2] | Puncher *1 |
| [3] | Paper feed sensor (PS201) | [4] | Puncher frame *2 |
| [5] | Punch motor sensor (PS202) | [6] | Puncher home sensor (PS204) |
| [7] | Puncher drive cam sensor (PS203) | [8] | Punch dust full sensor (PS205) |
| [9] | Punch motor (M201) | [10] | Punch dust box |

- *1: The number of the puncher is varied depending on the type of punch kit.
- *2: The shape of the puncher frame is varied depending on the type of punch kit.

### 5.1.1 Punch kit type

2 holes/3 holes kit (Selectable the hole number)

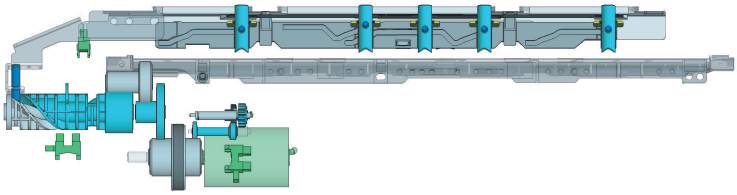

- Attachable marketing area: Europe, US, Others 1-5

2 holes/4 holes kit (Selectable the hole number)

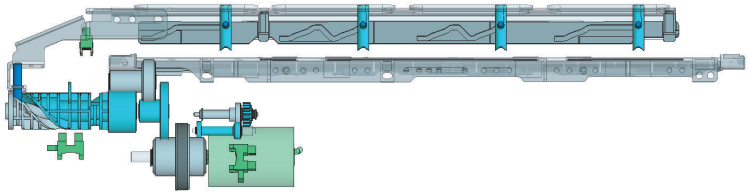

- Attachable marketing area: Europe, US, Others 1-5

2 holes punch kit

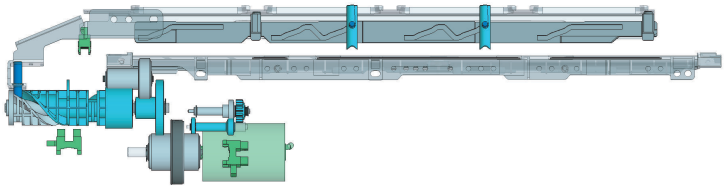

- Attachable marketing area: Japan

4 holes punch kit

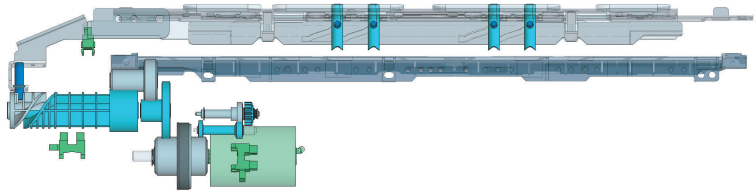

- Attachable marketing area: Europe

## 5.2 Drive

- The drive source for the punch section is a punch motor. It drives the puncher and the punch dust agitating blade.
- The puncher is driven via the puncher drive cam.
- The punch dust agitating blade is driven via the agitating blade drive connecting lever. The agitating blade drive connecting lever has the function to detect punch dust full.

Overall view

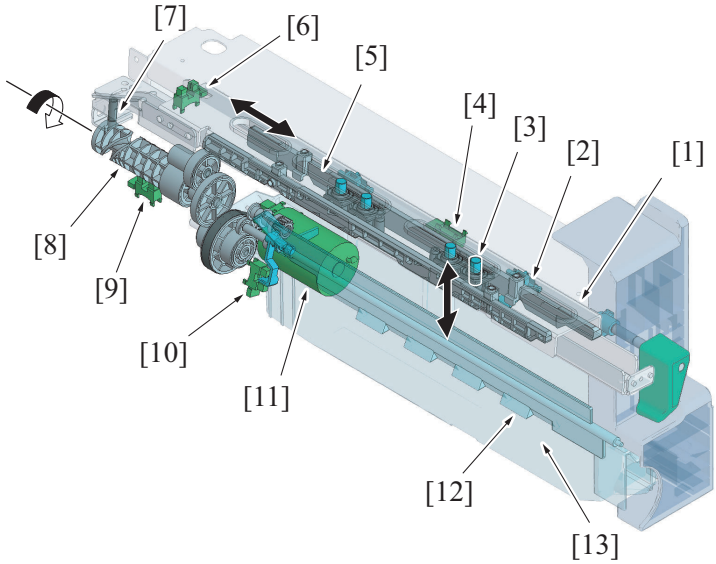


| | | | |
|---|---|---|---|
| [1] | Puncher frame *1 | [2] | Registration guide |
| [3] | Puncher *2 | [4] | Paper feed sensor (PS201) |
| [5] | Slide came | [6] | Puncher home sensor (PS204) |
| [7] | Cam slide shaft | [8] | Puncher drive cam |
| [9] | Puncher drive cam sensor (PS203) | [10] | Punch dust full sensor (PS205) |
| [11] | Punch motor (M201) | [12] | Punch dust agitating blade |
| [13] | Punch dust box | - | - |

- *1: The shape of the puncher frame is varied depending on the type of punch kit.
- *2: The number of the puncher is varied depending on the type of punch kit.

**NOTE**

- **The illustration explains with an example for "2 holes/4 holes kit".**
- **The slide cam has a guide. With the shape of the guide and the difference shift value of the puncher frame, only the specified puncher can be moved down.**
- **The "2 holes kit" and the "4 holes kit" do not have the punch hole switching function.**

Enlarged view of the punch dust agitating blade drive section

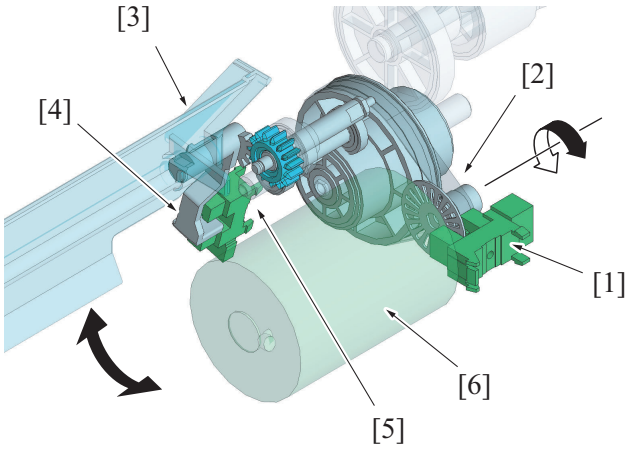


| | | | |
|---|---|---|---|
| [1] | Punch motor sensor (PS202) | [2] | Encoder |
| [3] | Punch dust agitating blade | [4] | Punch dust agitating blade drive connecting lever |
| [5] | Punch dust full sensor (PS205) | [6] | Punch motor (M201) |

## 5.3 Operation

### 5.3.1 Skew correction mechanism

- When in punch mode, the paper is transported to the paper transport section of the finisher once and switchbacked to make the paper contact the registration guide. This process will correct the skew at the rear edge of the paper (tilt) to enable punching at the proper position.

Overall view

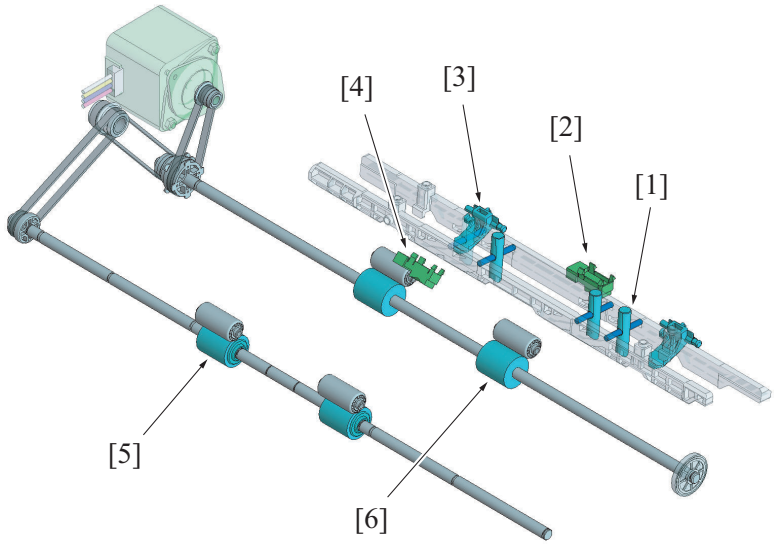


| | | | |
|---|---|---|---|
| [1] | Puncher | [2] | Paper feed sensor (PS201) |
| [3] | Registration guide | [4] | Paper feed sensor (PS101) |
| [5] | Receiving roller | [6] | Paper conveyance roller |

Front view

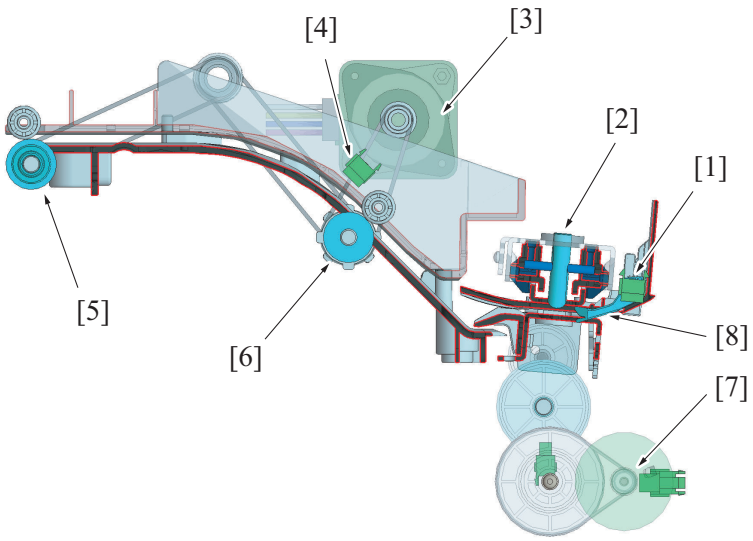


| | | | |
|---|---|---|---|
| [1] | Paper feed sensor (PS201) | [2] | Puncher |
| [3] | Paper conveyance motor (M101) | [4] | Paper feed sensor (PS101) |
| [5] | Receiving roller | [6] | Paper conveyance roller |
| [7] | Punch motor (M201) | [8] | Registration guide |

**(1) Skew correction process**

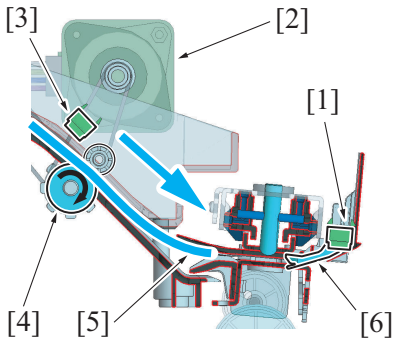


1. The paper conveyance motor [2] of the finisher will rotate forward, and the paper conveyance roller [4] will rotate forward. The paper will be transported for the punch section to the transport section.
2. The paper feed sensor [3] (PS101) will detect the front edge of the paper, and the paper feed sensor [1] (PS201) will detect the rear edge of the paper.
3. When the paper feed sensor [1] (PS201) detects the rear edge of the paper and the specified period of time has passed, the transportation motor will rotate in reverse direction.
4. The paper will be switchbacked [5] once, and the rear edge of the paper contacts the registration guide [6].

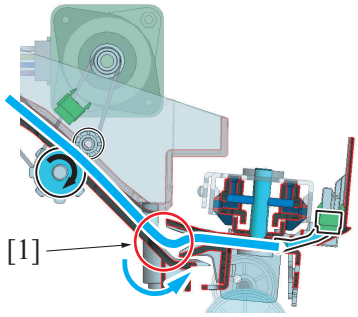


5. When the paper is switchbacked, the paper forms a loop [1] between the paper conveyance roller and the registration guide, and corrects the paper skew (tilt).
6. The paper feed sensor at the punch section detects the rear edge of the paper, and the paper conveyance motor stops after the specified period of time to stop the switchback of the paper.

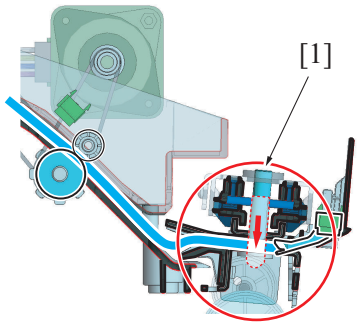


7. The switchback of the paper stops, and the puncher [1] moves down to punch the hole on the paper.
8. After punching the hole, the conveyor motor rotates forward to transport the paper into the finisher.

### 5.3.2 Punch control

- The holes are punched on the paper by switchback of the paper into the punch unit and by moving the puncher up/down by the punch motor.

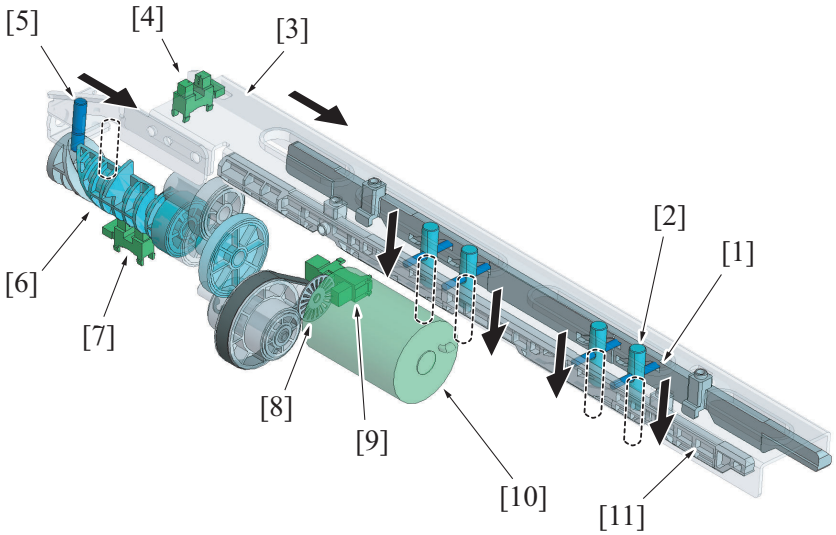


| | | | |
|---|---|---|---|
| [1] | Puncher slide pin | [2] | Puncher |
| [3] | Puncher frame | [4] | Puncher home sensor (PS204) |
| [5] | Puncher frame slide pin | [6] | Puncher drive cam |
| [7] | Puncher drive cam sensor (PS203) | [8] | Encoder |
| [9] | Punch motor sensor (PS202) | [10] | Punch motor (M201) |
| [11] | Slide cam | - | - |

### (1) Paper punching process

1. The puncher frame waits at the home position to make the puncher waits at the upper position.
   Position of the puncher frame is detected by the puncher home sensor.
2. Paper feed sensor at the punch section detects the rear edge of the paper, and stops switchback of the paper after a specified period of time.
3. The punch motor rotates forward to rotate the puncher drive cam forward. The punch frame then will move towards the front side. When the puncher frame moves towards the front side, the slide cam moves the puncher down by its cam shape.
   The rotation value of the punch motor is detected by the number of times light shielding plate blocks the punch encoder sensor. The value the slide cam moves back and forth differs depending on the value the punch motor rotates. When the value the slide cam moves changes, the value of the puncher moves in vertical direction also changes. The position of the puncher is judged in process. The rotating position of the puncher driven cam is detected by the puncher drive cam sensor.

Example: Figure for 2 holes punching operation for 2 hoes/3 holes kit

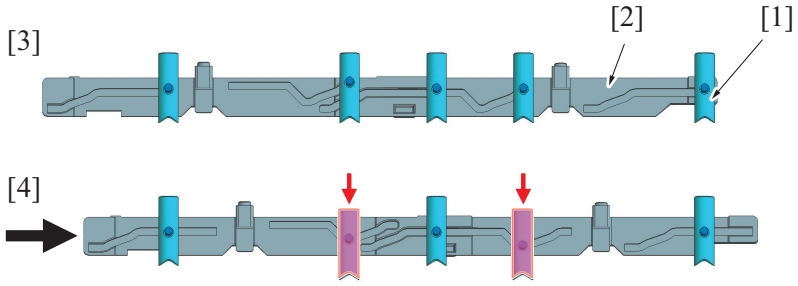


| | | | |
|---|---|---|---|
| [1] | Puncher | [2] | Slide cam |
| [3] | Puncher frame (home position) | [4] | Puncher frame (Punching position) |

- The left side of the cross section shows the rear side of the punch unit. The right side shows the front side.

4. When the puncher frame moves to the front side, the slide cam pushes the puncher down to punch the holes at the rear edge of the paper. (The holes are punched paper by paper.) The holes are judged to be punched according to the rotation value of the punch motor.
   **NOTE**
   - **The number of the punchers (number of the holes) differs depending on the type of the punch kit.**
   - **The number of the punch holes is switched according to the shift value of the puncher frame for the 2 holes/3 holes kit as well as 2 holes/4 holes kit.**
     **For details, see "PG.5.3.3 Punch holes switch control".**
5. When the holes are punched, the punch motor rotates in reverse direction, and the puncher drive cam rotates in reverse direction. This process leads the puncher frame to return to the home position to move the puncher up.

## 5.3.3 Punch holes switch control

- 2 holes/3 holes punch kit as well as 2 holes/4 holes punch kit have mechanisms to switch the number of punch holes.

### (1) Number of punch holes switch mechanism

- The slide cam has a guide. With the shape of the guide and the difference shift value of the puncher frame, only the specified puncher can be moved down.
- The shift value of the puncher frame is judged by the rotation value of the punch motor. The rotation value of the punch motor is detected by the punch motor sensor.

- The number of the punch holes can be selected when selecting the punch mode.
  **NOTE**
  - **When the second type of punch hole (3 holes on the illustration) is selected, the puncher frame shifts to the waiting position 2 from the waiting position 1 (home position) and waits prior to the job.**

- The number of the puncher and the guide shape of the slide cam differ depending on the type of the punch kit.

Example: cross section of the 2 holes/3 holes kit

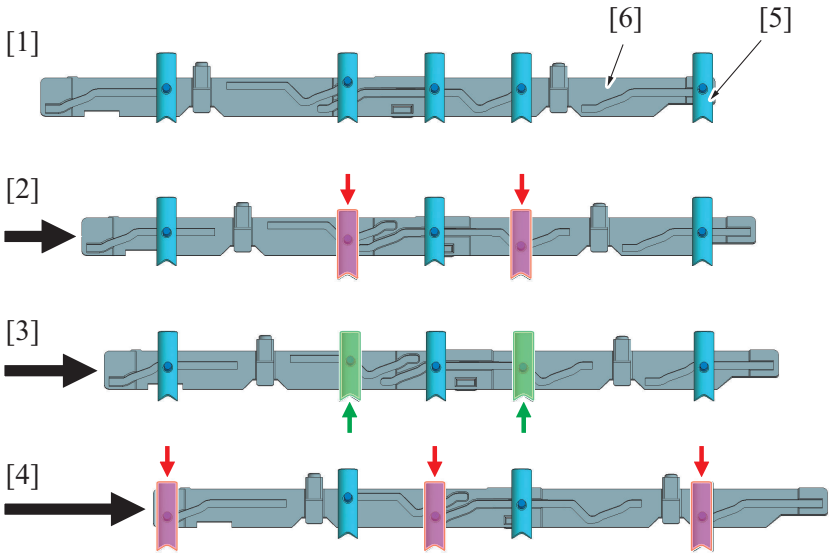


| | | | |
|---|---|---|---|
| [1] | Waiting position 1 (home position) | [2] | Puncher frame shift value: Small (Example: 2 holes punching position) |
| [3] | Waiting position 2 (puncher frame shift value: medium) | [4] | Puncher frame shift value: Large (Example: 3 holes punching position) |
| [5] | Puncher | [6] | Slide cam |

### (2) Puncher frame position detect mechanism

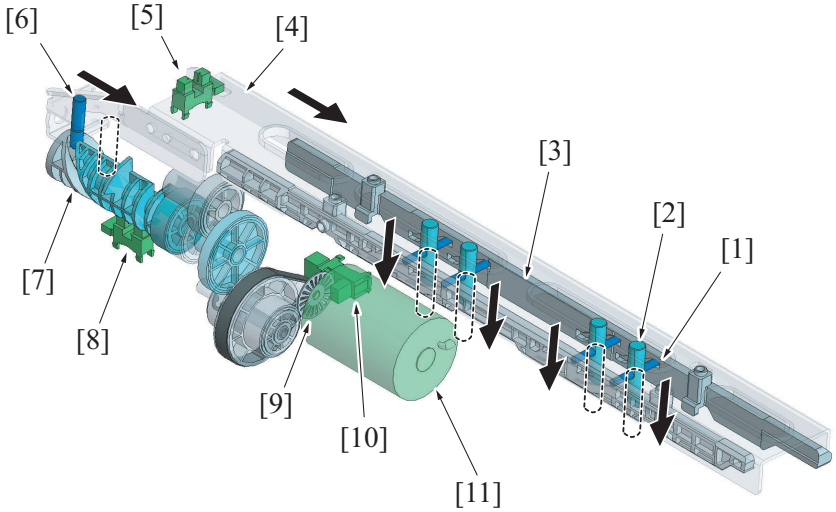


| | | | |
|---|---|---|---|
| [1] | Puncher slide pin | [2] | Puncher |
| [3] | Slide cam | [4] | Puncher frame |
| [5] | Puncher home sensor (PS204) | [6] | Puncher frame slide pin |
| [7] | Puncher drive cam | [8] | Puncher drive cam sensor (PS203) |
| [9] | Encoder | [10] | Punch motor sensor (PS202) |
| [11] | Punch motor (M201) | - | - |

#### (a) Puncher position detect control

- The waiting position 1 (home position) and the waiting position 2 are judged by the assembly of the detecting result of the punch home sensor and the puncher drive cam sensor.

| Puncher retract position | Puncher home sensor | Puncher drive cam sensor |
|---|---|---|
| Waiting position 1 (puncher retract position) | Blocked | 1st light block |

| Puncher retract position | Puncher home sensor | Puncher drive cam sensor |
|---|---|---|
| Punching position 1 (Example: 2 holes punching) | Unblocked | 1st light unblock |
| Waiting position 2 (puncher retract position) | | 2nd light block |
| Punching position 2 (Example: 3 holes punching) | | 2nd light unblock |

**(b) Puncher shift value detect mechanism**

- The shift value of the puncher frame is judged by the number of times the encoder blocks the punch motor sensor.

### 5.3.4 Punch dust full detection control

- The punch dust box section has the punch dust full sensor. When the job is commanded with the punch dust exceeding the specified value, a warning message for the punch dust full is displayed on the control panel.
- The punch dust full sensor detects the volume of the punch dust with the position of the agitating blade drive connecting lever.
- The punch dust full sensor also detects if the punch dust box is installed.
  If the punch dust box is not installed when the punch job is commanded, the warning message for the punch dust full will be displayed on the control panel.
- Even when the "punch dust full" is detected, printing is not prohibited. All the jobs except punch holes will be conducted until finished.

Punch dust box over view

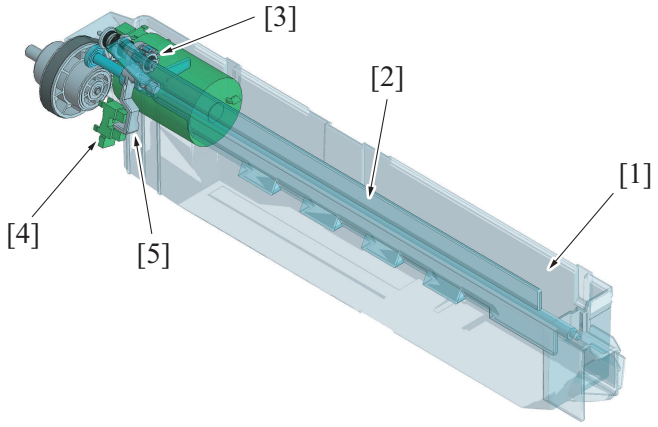


| | | | |
|---|---|---|---|
| [1] | Punch dust box | [2] | Punch dust agitating blade |
| [3] | Drive transmission gear | [4] | Punch dust full sensor (PS205) |
| [5] | Agitating blade drive connecting lever | - | - |

Enlarged view of the punch dust full sensor section

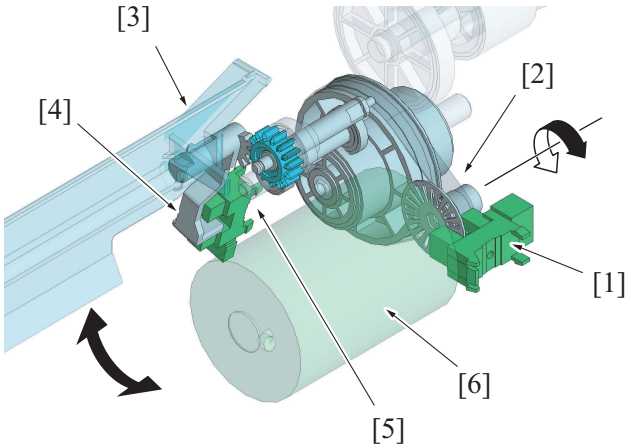


| | | | |
|---|---|---|---|
| [1] | Punch motor sensor (PS202) | [2] | Encoder |
| [3] | Punch dust agitating blade | [4] | Agitating blade drive connecting lever |
| [5] | Punch dust full sensor (PS205) | [6] | Punch motor (M201) |

### (1) Punch dust full detect operation

Punch dust agitating blade home position view

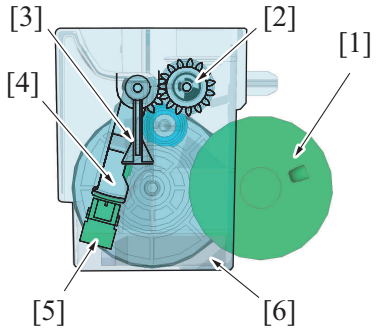


1. The drive transmission gear [2] stops while the punch motor [1] is in halt. The punch dust agitating blade [3] in the punch dust box [6] waits at the home position.
The agitating blade drive connecting lever [4] blocks the punch dust full sensor [5] during that time.

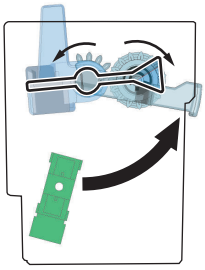

2. When the punch motor rotates forward, the drive transmission gear rotates forward.
3. When the drive transmission gear rotates forward, the agitating blade drive connecting lever rotates forward to rotate the punch dust agitating blade forward.
When the agitating blade drive connecting lever rotates, the punch dust full sensor is unblocked.
The punch dust agitating blade rotates to level the punch dust in the punch dust box.

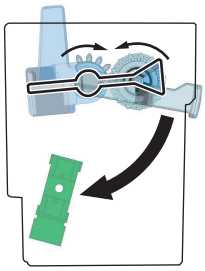

4. When punch holes is complete, the punch motor starts rotating in reverse direction.
When the punch motor rotates in reverse direction, the punch dust agitating blade rotates in reverse direction and tries to return to the home position.

In normal operation

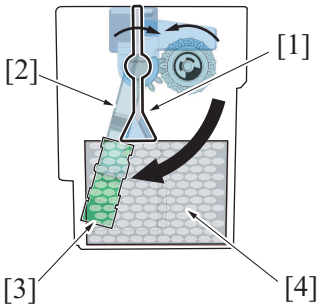


**NOTE**
**In normal operation:**
- **The agitating blade drive connecting lever [2] and the punch dust agitating blade [1] return to their home positions by the punch motor's drive force.**
- **By the agitating blade drive connecting lever [2] returning to the home position, the punch dust full sensor [3] will block the light. The punch dust [4] then is judged not to be full.**

When the punch dust is full

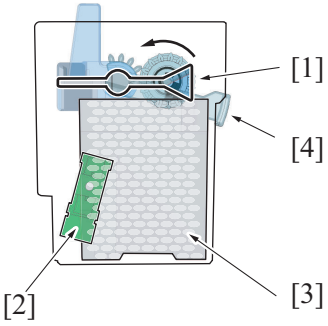


**NOTE**
**When the punch dust is full:**
- **The agitating blade drive connecting lever [4] and the punch dust agitating blade [1] cannot return to their home positions due to the punch dust [3].**
- **The torque limiter function is installed to the drive transmission gear to prohibit transmission of the drive force more than specified.**
- **With the agitating blade drive connecting lever [4] not returning to the home position, the punch dust full sensor [2] keeps being unblocked. When the transmission status is detected for 10 consecutive times during punching operation, the punch dust [3] is detected to be full to display the message warning that the punch dust is at full level.**

### (a) Punch dust full message

Example of display




Example of display

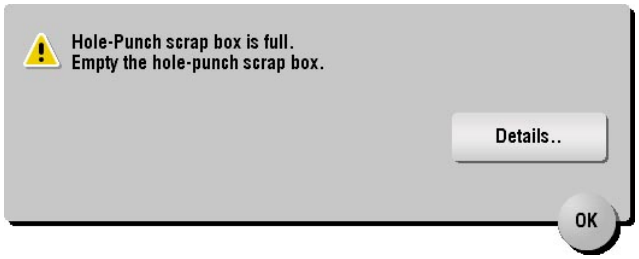


**NOTE**

- **The display details and message text are changed when the JS-506 is installed to the MFP.**

### (2) Punch dust box not installed detect control

1. When the punch dust box is installed, the agitating blade drive connecting lever waits at the home position. (blocks the punch dust full sensor)
2. When the punch dust box is removed, the punch dust full sensor is unblocked.
3. When the finisher is closed and the punch job is commanded with the above status, the punch dust box is detected as uninstalled. So that the message appears on the control panel to warn that the punch dust box is full.

   **NOTE**

   - **Even when the "punch dust box not installed" is detected, printing is not prohibited. All other jobs except punching holes will be conducted and continued until finished.**
   - **Punching the holes to the paper will be conducted only when the punch dust box is installed.**

### (3) Unit change function

- The screen to be displayed when a punch dust full is detected can be enabled or disabled in the “Unit Change” in the Service Mode.

Service Mode/System screen: typical

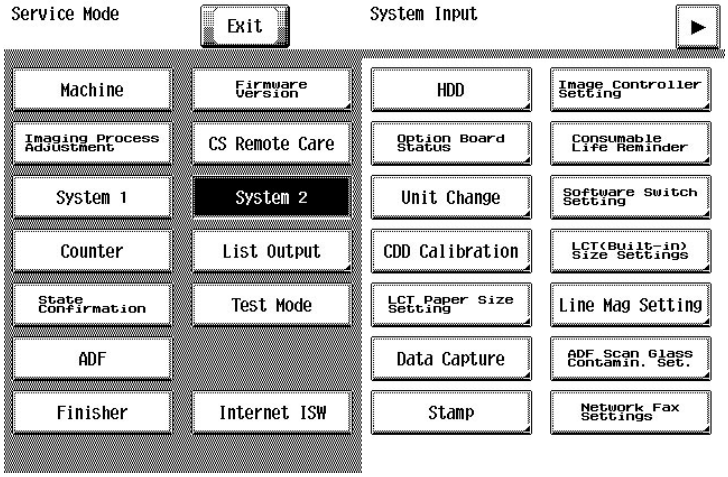


System 2/Unit Change screen: typical

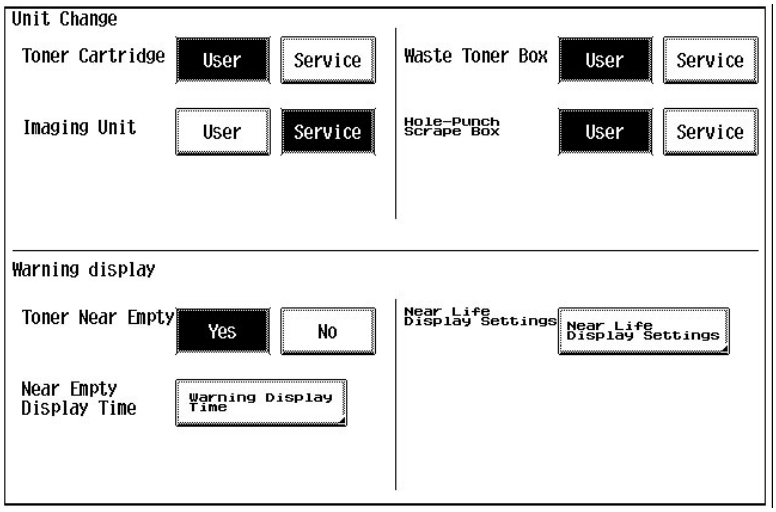


**NOTE**

- **The Service Mode screen display, details, menus, and default settings are changed when the JS-506 is installed to the MFP.**

- **For details of the Service Mode, see "I.5.16.5 Unit Change."**

# 6. TRANSPORT SECTION

## 6.1 Configuration

- At the transport section, paper that is transported from the MFP paper exit section (punch section when a punch kit is installed) is transported into the finisher and alignment section.

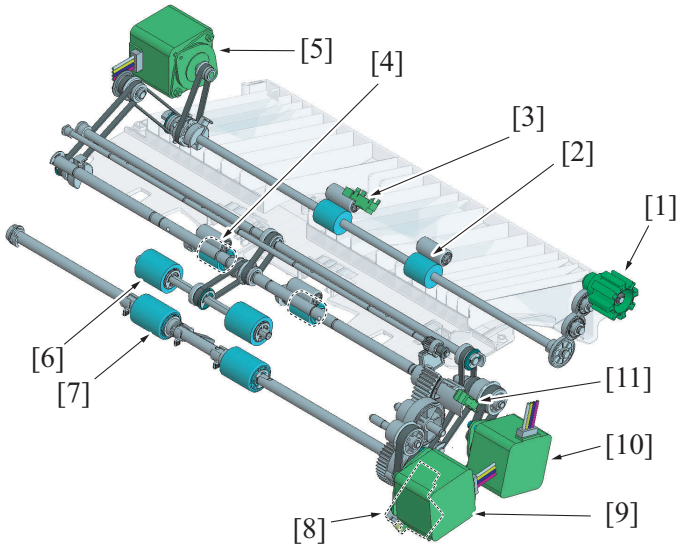


| | | | |
|---|---|---|---|
| [1] | Jam removal dial | [2] | Paper conveyance roller |
| [3] | Paper feed sensor (PS101) | [4] | Receiving roller |
| [5] | Paper conveyance motor (M101) | [6] | Paper exit roller/upper |
| [7] | Paper exit roller/lower | [8] | Paper exit roller solenoid (SD103) |
| [9] | Exit roller lift up motor (M104) | [10] | Paper exit motor (M102) |
| [11] | Pick up roller position sensor (PS105) | - | - |

## 6.2 Drive

### 6.2.1 Drive outline

The driving source of the transport section is the paper conveyance motor, paper exit motor, and exit roller lift up motor, and the following parts are driven.

| Section | Driving source | Driving parts | Function |
|---|---|---|---|
| Transport/ receiving roller section | Paper conveyance motor | • Paper conveyance roller<br>• Receiving roller | • Transports the paper to inside the finisher<br>• Transports the paper to the alignment section<br>• Switchbacks the paper to the punching section (when in punch mode) |
| Paper exit roller section | Paper exit motor | • Paper exit roller/upper<br>• Paper exit roller/lower<br>• Paper exit paddle | • Rotates the paper exit roller/upper in reverse direction to transport the paper to the alignment tray (when in sort/group mode)<br>• Rotates the paper exit roller/upper and the paper exit roller/lower in forward direction to exit the paper to the paper exit tray |
| | Exit roller lift up motor | • Paper exit roller/upper<br>• Paper guide | • Moves the paper exit roller/upper and the paper guide up/down<br>• Moves the paper exit roller/upper down to transport the paper to the alignment tray (when in sort/group mode)<br>• Moves the paper exit roller/upper down to exit the paper to the paper exit tray |

### 6.2.2 Paper conveyance/receiving roller section drive

- The drive source for the paper conveyance and the receiving roller section is the paper conveyance motor which drives paper conveyance roller and the receiving roller.
- The paper conveyance roller and the receiving roller can be manually rotated (forward/reverse) by manually rotate the jam removal dial. This dial is to be used when the paper is clogged inside the finisher.

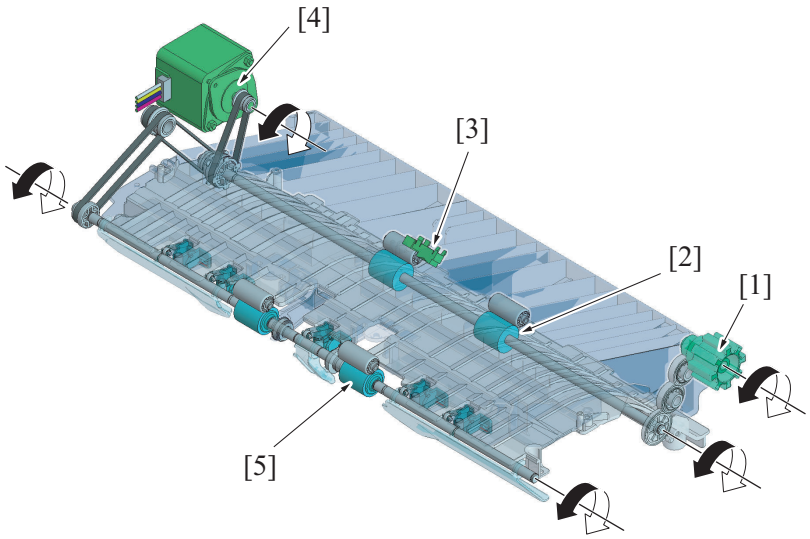


| | | | |
|---|---|---|---|
| [1] | Jam removal dial | [2] | Paper conveyance roller |
| [3] | Paper feed sensor (PS101) | [4] | Paper conveyance motor (M101) |
| [5] | Receiving roller | - | - |

### 6.2.3 Paper exit roller section drive

- The paper exit roller section has 2 types of drive mechanisms.

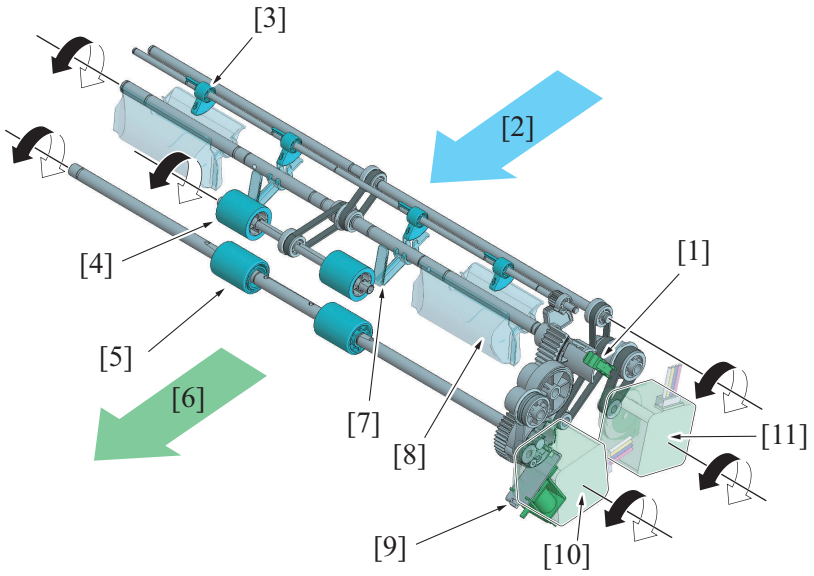


| | | | |
|---|---|---|---|
| [1] | Pick up roller position sensor (PS105) | [2] | Direction of the transport (transport section) |
| [3] | Paper lift up cam | [4] | Paper exit roller/upper |
| [5] | Paper exit roller/lower | [6] | Direction of the paper exit (receive section) |
| [7] | Paper guide | [8] | Paper guide |
| [9] | Paper exit roller solenoid (SD103) | [10] | Exit roller lift up motor (M104) |
| [11] | Paper exit motor (M102) | - | - |

#### (1) Paper exit motor

- The paper exit motor drives the paper exit roller/upper and the paper exit roller/lower.
- The paper exit roller/upper is connected to the paper exit motor. Rotation of the paper exit motor rotates the paper exit roller/upper.
- The connection of the paper exit roller/lower and the paper exit motor is released while waiting. Turn on/off of the paper exit roller solenoid to connect the paper exit roller/lower drive gear and rotate (forward direction*) the paper exit roller/lower.

**NOTE**

- ***: A torque limiter is installed to the paper exit roller/lower. Therefore, when the reverse rotation force of over the predetermined value is applied from the paper exit roller/upper which is pressed at the time of FD alignment, the paper exit roller/lower rotates in reverse direction as the paper exit roller/upper rotates.**

Paper exit motor drive view

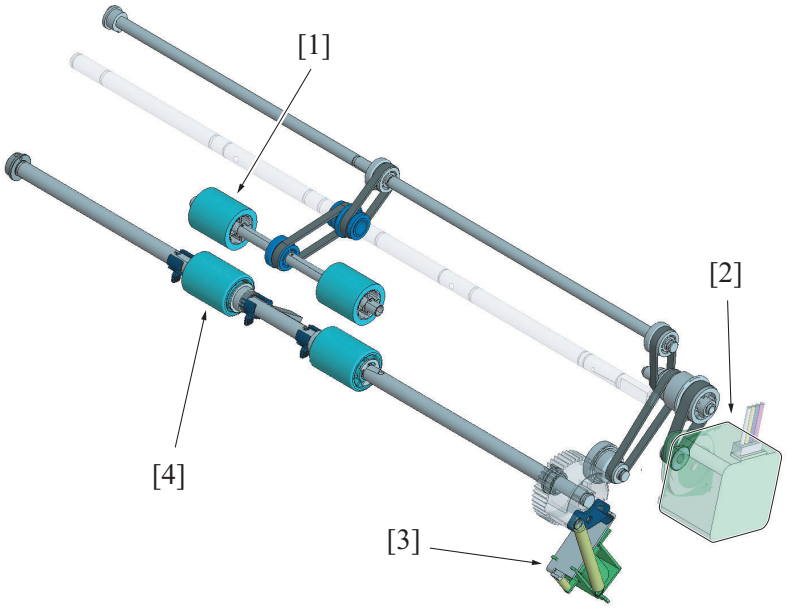


| | | | |
|---|---|---|---|
| [1] | Paper exit roller/upper | [2] | Paper exit motor (M102) |
| [3] | Paper exit roller solenoid (SD103) | [4] | Paper exit roller/lower |

Paper exit roller/lower drive front view

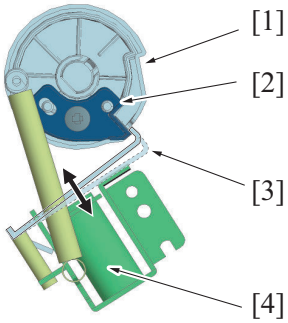


| | | | |
|---|---|---|---|
| [1] | Paper exit roller/lower drive gear | [2] | Paper exit roller/lower drive gear lock plate |
| [3] | Rotation lock claw | [4] | Paper exit roller solenoid (SD103) |

### (2) Exit roller lift up motor

- The exit roller lift up motor drives the up/down operation of the paper exit roller/upper. It also drives the paper guide (2 points) and the paper guide (2 points). The paper exit roller/upper waits at the upper position. Rotation of the exit roller lift up motor moves the paper exit roller/lower down. (Drive source for rotating the paper exit roller/upper is the paper exit motor.)
- The exit roller lift up motor rotates the cam (4 points). When the cam rotates, the paper guide pushed up by the cam will be unlocked to move the paper guide down by its own weight.

Exit roller lift up motor drive view

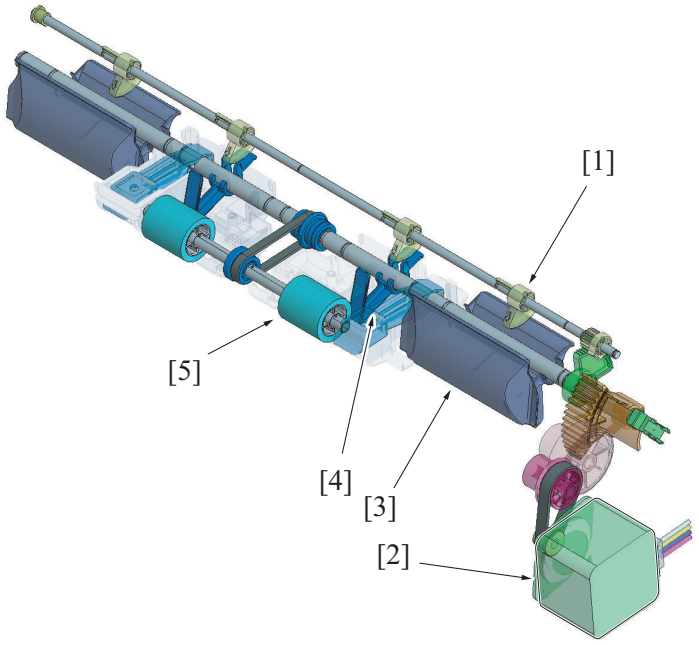


| | | | |
|---|---|---|---|
| [1] | Cam | [2] | Exit roller lift up motor (M104) |
| [3] | Paper guide | [4] | Paper guide |
| [5] | Paper exit roller/upper | - | - |

## 6.3 Operation

### 6.3.1 Paper conveyance/receiving roller section paper transport control

- The paper conveyance roller sends the paper that is transported from the MFP paper exit section (or from the punch section) to the receiving roller.
- The receiving roller sends the paper transported from the paper conveyance roller to the receiving section or the alignment section.
- The paper feed sensor detects the front edge and the rear edge of the paper. This will make the unit to detect the transportation and path of the paper.
- When in punch mode, the paper conveyance roller and the receiving roller rotate in reverse direction to switchback the paper and punch the holes at the punch section.
  When the holes are punched, the paper conveyance roller and the receiving roller rotate in forward direction to send the paper to the receiving section or to the alignment section.
  For details on punching operation, see "PG.5.3.2 Punch control".

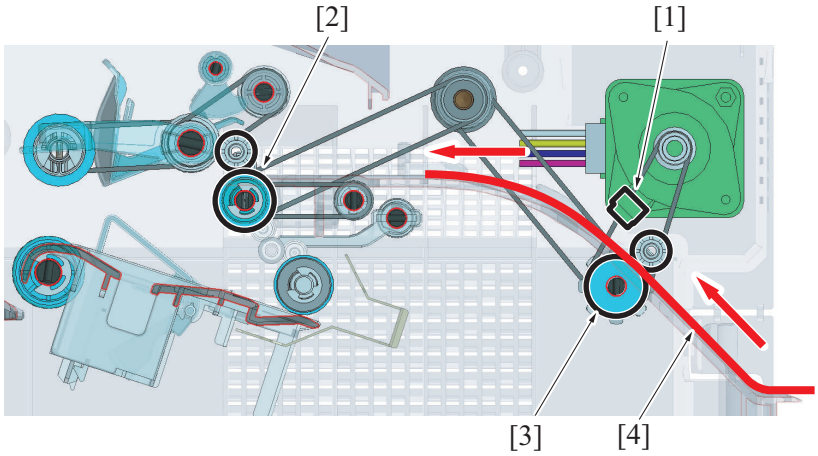


| | | | |
|---|---|---|---|
| [1] | Paper feed sensor (PS101) | [2] | Receiving roller |
| [3] | Paper conveyance roller | [4] | Paper |

### 6.3.2 Paper exit roller section paper transport control

#### (1) Non sort mode, Non group mode, Non staple mode, Sort mode, Group mode

- The paper guide waits at the upper position by the cam. When the cam rotates by the exit roller lift up motor, the paper guide will be unlocked and moves down to the lower position. The paper sent from the transport section will be led to the exit roller by the paper guide.
- The paper exit roller/upper moves down to hold the paper from the transport section with the paper exit roller/lower to discharge it to the exit tray.
- The paper surface detect sensor/1 detects that the paper is discharged to the paper exit tray by the actuator being pushed down while the paper passes through and then returned to the original position.

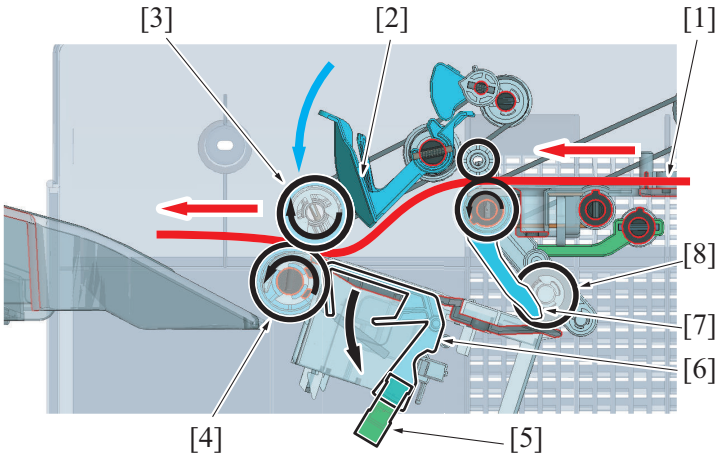


| | | | |
|---|---|---|---|
| [1] | Paper | [2] | Paper guide |
| [3] | Paper exit roller/upper | [4] | Paper exit roller/lower |
| [5] | Paper surface detect sensor/1 (PS102) | [6] | Paper surface detect sensor/1 actuator |
| [7] | Batch weight guide | [8] | Alignment roller |

### (2) Sort offset function mode, Group offset function mode, Staple mode

1. The paper exit roller/upper stops rotating at the upper position and waits.
   The paper exit roller/lower waits at the halt status.
2. The first paper is discharged [2] by the receiving roller [1], and moves down to the alignment tray by its own weight. [3]

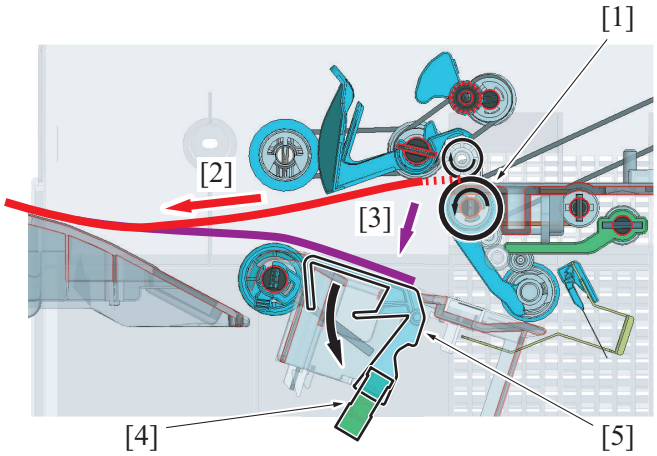


**NOTE**
- **The paper surface detect sensor/1 [4] detects that the paper is discharged to the alignment tray when the actuator [5] is pressed down by the paper.**

3. The paper exit roller/upper [1] moves down to hold the first paper on the alignment tray [2] with the paper exit roller/lower [3] to rotate rollers* in reverse direction and transport the paper to the alignment roller [5].

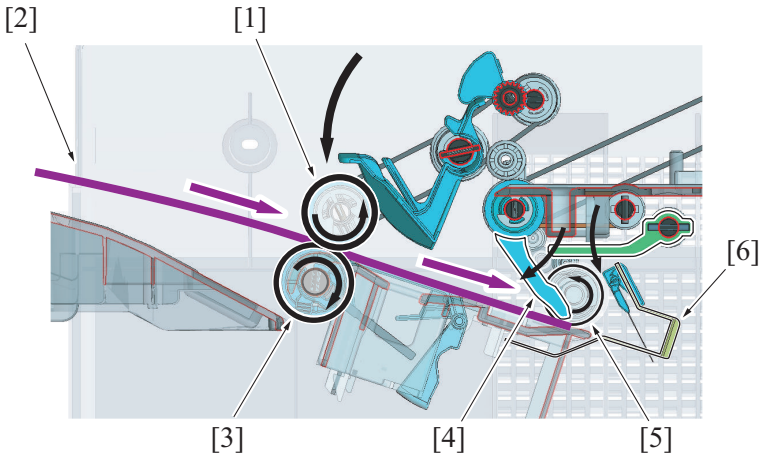


**NOTE**
- ***: The paper exit roller/lower [3] rotates in reverse direction driven by the paper exit roller/upper [1].**

4. The paper exit roller/upper [1] moves up and stops rotating.
5. The alignment roller [5] contacts the rear edge of the paper to the alignment plate [6] to align the paper. (paper FD alignment)
6. The alignment plate moves back and forth to align right and left of the paper. (paper CD alignment)
7. The batch weight guide [4] moves down to hold the rear end [2] of the aligned paper.
   For drive of the batch weight guide, see "PG.7.2.2 Alignment roller section".

**NOTE**
- **The batch weight guide [4] prevent the second paper and after to misalign the aligned paper [2]. For details, see "PG.7.3.2 Paper alignment control (paper FD alignment)".**

8. The second paper will be discharged over the first paper on the alignment tray.
9. The batch weight guide [4] moves up to release the rear end of the paper.
10. The paper exit roller/upper [1] moves down to hold the first and the second paper on the alignment tray with the paper exit roller/lower to rotate the paper exit roller/upper [1] in reverse direction, and transport it to the alignment roller [5] to align the rear edge of the paper.
11. The alignment plate moves back and forth to align the paper.

**NOTE**
- **The second paper and after will be transported in the same way.**
- **For details of the paper alignment control, see "PG.7.3.1 Paper alignment overview".**

12. When the last paper is aligned, the paper exit roller/upper [2] will move down to hold all the paper on the alignment tray [3] with the paper exit roller/lower [4].

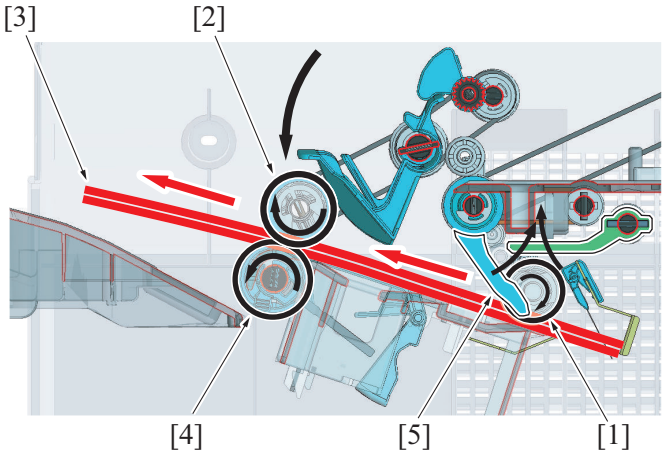


**NOTE**
- **When in staple mode, stapling is conducted after paper alignment is finished. For details on stapling control, see "PG.8.2.2 Stapling control".**
- **For control after the paper is discharged to the paper exit tray, refer to the receiving section.**

13. The batch weight guide [5] moves up to release the rear edge of the paper [2].
14. The paper exit roller/upper [2], paper exit roller/lower [4], and the alignment roller [1] rotate to discharge the paper [3] to the paper exit tray. (The paper exit roller/upper [2] and paper exit roller/lower [4] rotate in forward direction, and the alignment roller [1] rotates in reverse direction.)

### 6.3.3 Paper exit roller up/down control

The paper exit roller moves up/down when transporting the paper from the paper conveyance or receiving roller section to the receiving section or to the alignment section.

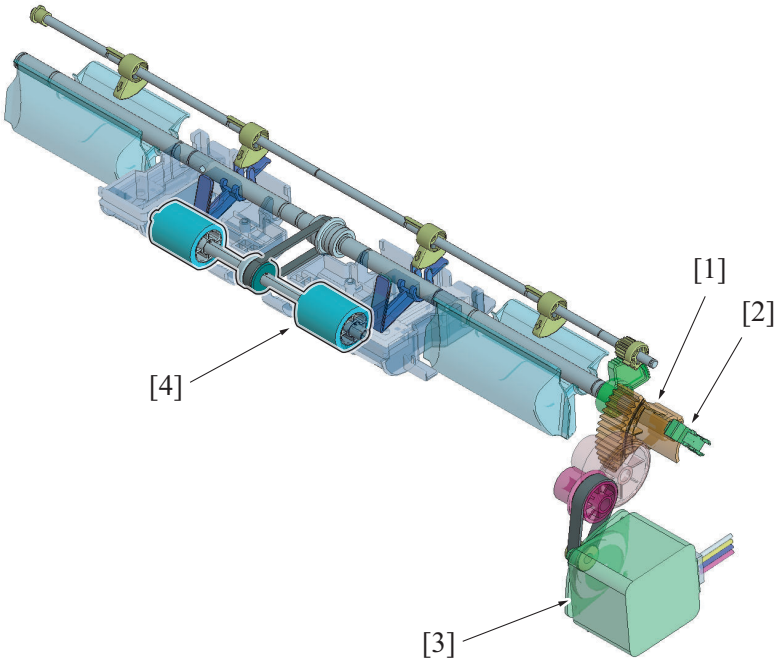


| | | | |
|---|---|---|---|
| [1] | Exit roller lift up gear | [2] | Pick up roller position sensor (PS105) |
| [3] | Exit roller lift up motor (M104) | [4] | Paper exit roller/upper |

### (1) Lift up control in non-sort mode, non-group mode, non-staple mode, sort mode, and group mode

1. The paper exit roller/upper is moved down from the upper position (home position) to the lower position (press position) to hold the paper with the paper exit roller/upper and the paper exit roller/lower to rotate the roller forward and to discharge the paper to the paper exit tray.
2. The paper exit roller/upper moves up when the paper transportation is complete. (returns to the home position)

### (2) Lift up control in sort offset mode, group offset mode, and staple mode

1. The paper exit roller/upper waits at the upper position (home position) and discharges the paper to the alignment tray.
2. The paper exit roller/upper moves down from the upper position to the lower position (press position).
3. The paper exit roller/upper rotates in reverse direction and sends the paper to the alignment section.
   **NOTE**
   - **When transporting the paper to the alignment section, only the paper exit roller/upper rotates in reverse direction.**
4. The paper is aligned in the alignment section. When the paper is being aligned, the paper exit roller/upper waits at the upper position.
5. When aligning and stapling are finished, the paper exit roller/upper moves down to hold the paper with the paper exit roller/upper and the paper exit roller/lower, and rotates the roller in forward direction to discharge the paper to the paper exit tray.
6. The paper exit roller/upper moves up when the paper transportation is complete. (returns to the home position)

### (3) Paper exit roller position detect control

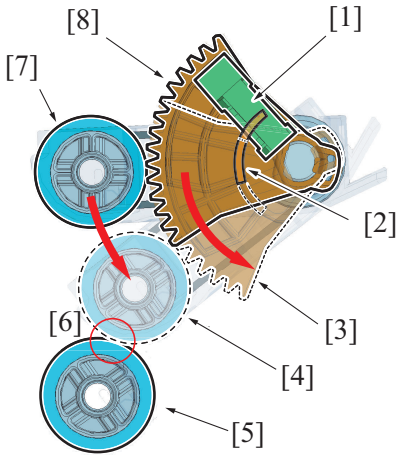


1. The paper exit roller/upper waits at the upper position [7]. (home position)
   The light shield plate [2] of the gear [8] installed on the lift up shaft for the paper exit roller/upper blocks the pick up roller position sensor [1] and detects that the paper exit roller/upper is at the home position [7].
2. When the exit roller lift up motor rotates, the gear on the exit roller lift up shaft rotates [3] to move the paper exit roller/upper [4] down to be pressed [6] to the paper exit roller/lower [5]. (Paper exit roller/upper at press position)
   When the gear [3] rotates, the light shield plate [2] also rotates to unblock the pick up roller position sensor [1]. This process detects that the paper exit roller/upper [4] position is at the press position.

| Paper exit roller/upper position | Pick up roller position sensor |
|---|---|
| Upper position (home position) | Blocked |
| Lower position (pressure position) | Unblocked |

## 6.3.4 Paper exit roller/lower drive connecting control

- It rotates the paper exit roller/lower when transporting the paper from the transport section to the receiving section or to the alignment section.
- The connection of the paper exit roller/lower and the paper exit motor is released by the paper exit roller solenoid when waiting. On/off of the paper exit roller solenoid connects the paper exit roller/lower to the paper exit motor, and rotates as the paper exit motor rotates. When the paper exit roller/lower and the paper paddle rotate one revolution clockwise (forward direction), the connection with the paper exit motor will be released and stop.
  **NOTE**
  - **For details of the paper weight paddle control, see "PG.9.3.1 Paper exit paddle control".**

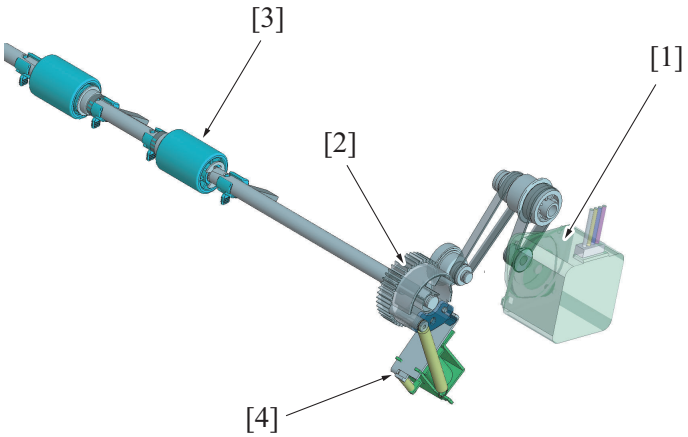


| | | | |
|---|---|---|---|
| [1] | Paper exit motor (M102) | [2] | Paper exit roller/lower drive gear |
| [3] | Paper exit roller/lower | [4] | Paper exit roller solenoid (SD103) |

### (1) Paper exit roller/lower drive connecting process

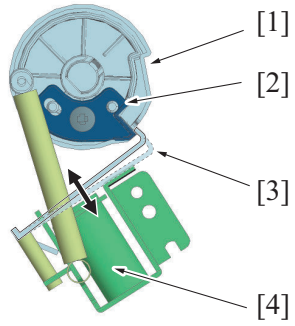


1. Connection of the paper exit roller/lower with the paper exit motor is released while waiting. On/off of the paper exit roller solenoid [4] operates the rotation lock claw [3] for the paper exit roller solenoid to release the lock plate [2] installed on the paper exit roller/lower drive gear [1].

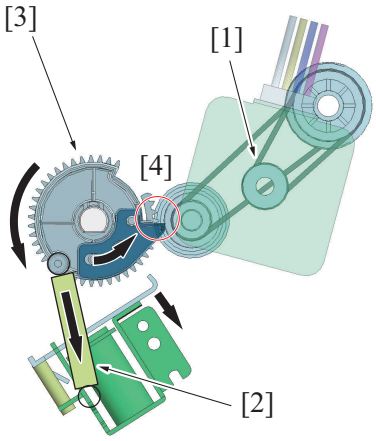


2. By the paper exit roller/lower drive gear [3] being rotated by the spring force [2], it will be connected to the drive mechanism [4] of the paper exit motor [1]. This process transfers drive force to the paper exit roller/lower drive gear to rotate the paper exit roller/lower.

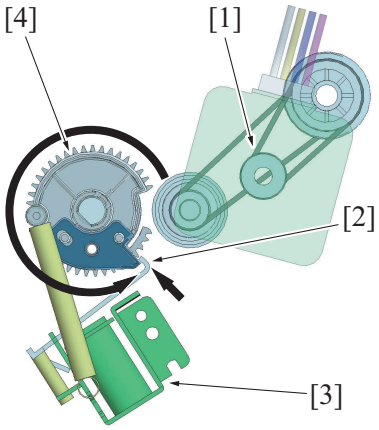


3. The paper exit roller/lower will be released from the paper exit motor [1] drive mechanism by the shape of the paper exit roller/lower drive gear [4] after rotating about one revolution. (Connection between the paper exit roller/lower and the paper exit motor [1] will be released.)
4. The paper exit roller/lower drive gear [4] will be locked to prohibit rotation by the rotation lock claw [2] of the paper exit roller solenoid [3]. (The paper exit roller/lower stops rotating.)

# 7. ALIGNMENT SECTION

## 7.1 Configuration

- In the alignment section, paper transported from the transport section is aligned and delivered to the paper exit tray.

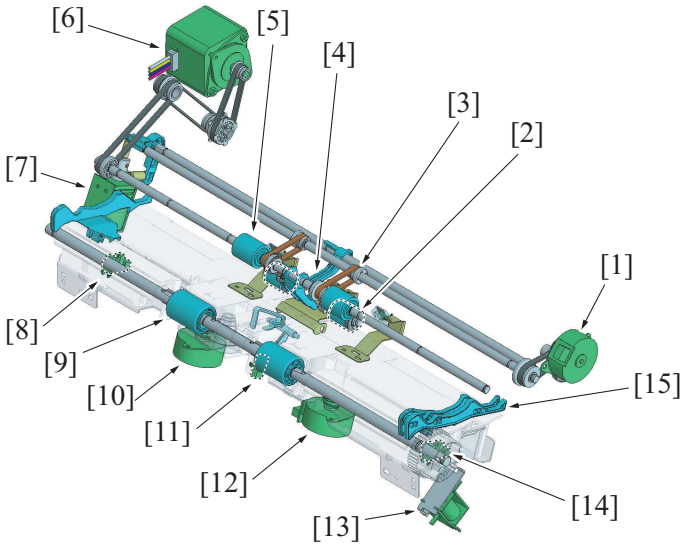


| | | | |
|---|---|---|---|
| [1] | Alignment roller motor (M103) | [2] | Alignment roller |
| [3] | Drive connecting belt | [4] | Batch weight guide |
| [5] | Receiving roller | [6] | Paper conveyance motor (M101) |
| [7] | Batch solenoid (SD102) | [8] | Alignment plate home sensor/R (PS109) |
| [9] | Paper exit roller/lower | [10] | Alignment motor/R (M106) |
| [11] | Paper surface detect sensor/1 (PS102) | [12] | Alignment motor/F (M105) |
| [13] | Paper exit roller solenoid (SD103) | [14] | Alignment plate home sensor/F (PS108) |
| [15] | Alignment plate/Fr | - | - |

## 7.2 Drive

### 7.2.1 Drive outline

The driving source of the alignment section is the paper conveyance motor, alignment roller motor, batch solenoid, alignment motor, and paper exit motor, and the following parts are driven.

| Section | Driving source | Driving parts | Function |
|---|---|---|---|
| Alignment roller section | Paper conveyance motor | Receiving roller | Transports paper to the alignment tray. |
| | Alignment roller motor | Alignment roller | • Switchbacks the paper to align the rear edge of the paper. (FD alignment operation)<br>• The aligned paper will be discharged to the paper exit tray. |
| | Batch solenoid | Batch lever | It holds the rear edge of the paper on the alignment tray. It prevents the aligned paper to be misaligned by the paper that follows. |
| Alignment tray section | Alignment motor | Alignment plate/Fr | It moves the alignment plate/Fr forward and backward to align the paper. (CD alignment operation) |
| | | Alignment plate/Rr | It moves the alignment/Rr forward and backward to align the paper. (CD alignment operation) |
| | Paper exit motor | Paper exit roller/upper | • It transports the paper to the alignment tray. (switchback)<br>• Exits paper to the paper exit tray. |
| | | Paper exit roller/lower | The paper is discharged to the paper exit tray. |
| | | Paper exit paddle | |

### 7.2.2 Alignment roller section

There are 3 types of drive mechanisms for the alignment roller section.

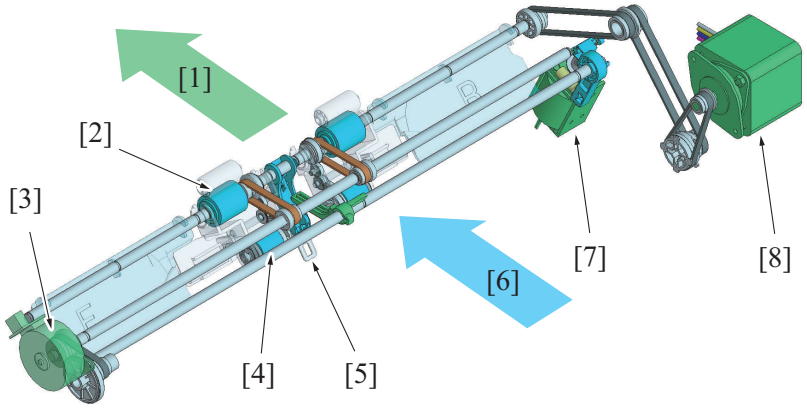


| | | | |
|---|---|---|---|
| [1] | Direction of the paper exit (receive section) | [2] | Receiving roller |
| [3] | Alignment roller motor (M103) | [4] | Alignment roller |
| [5] | Paper weight guide | [6] | Direction of the paper transport (transport section) |
| [7] | Batch solenoid (SD102) | [8] | Paper conveyance motor (M101) |

### (1) Paper conveyance motor

- The receiving roller is driven by the paper conveyance motor.
- For details of the receiving roller drive, see “Paper conveyance/receiving roller section drive”.
- The receiving roller is installed on the drive shaft for the receiving roller. It rotates by the drive force of the transport motor.

**NOTE**

- **The drive transmission pulley is not fixed to the receiving roller's drive shaft. Therefore, the alignment roller does not rotate even when the paper conveyance motor rotates.**

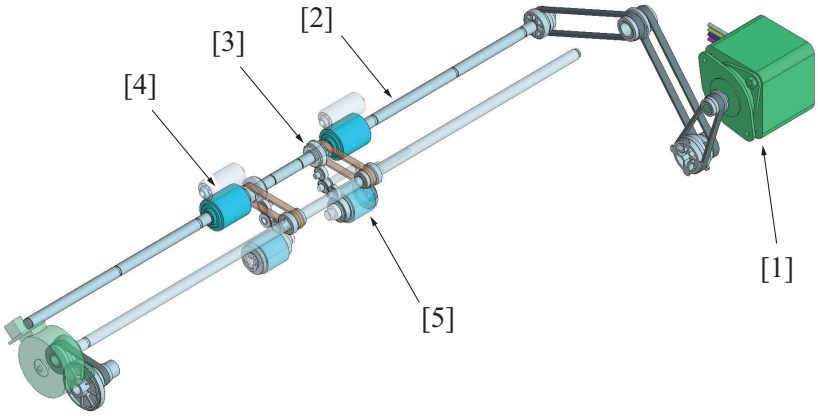


| | | | |
|---|---|---|---|
| [1] | Paper conveyance motor (M101) | [2] | Receiving roller drive shaft |
| [3] | Drive connecting pulley | [4] | Receiving roller |
| [5] | Alignment roller | - | - |

### (2) Alignment roller motor

- The alignment roller is driven by the alignment roller motor.
- The alignment roller rotates by the drive force of the alignment roller motor through the drive transmission pulley on the drive shaft for the receiving roller.

**NOTE**

- **The drive transmission pulley is not fixed to the receiving roller's drive shaft. Therefore, the receiving roller does not rotate even when the alignment roller motor rotates.**

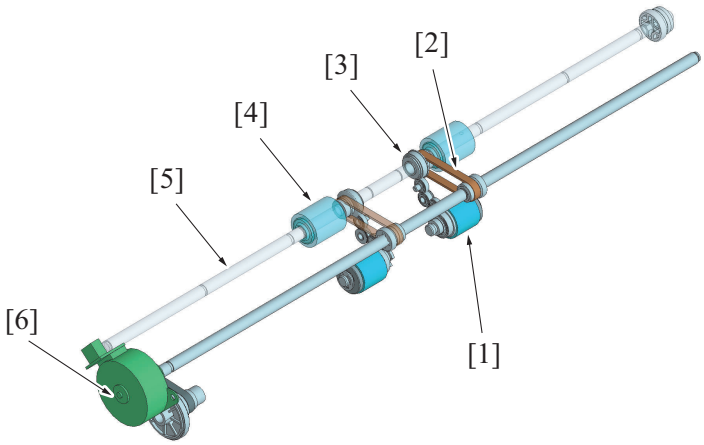

| | | | |
|---|---|---|---|
| [1] | Alignment roller | [2] | Drive connecting belt |
| [3] | Drive connecting pulley | [4] | Receiving roller |
| [5] | Receiving roller drive shaft | [6] | Alignment roller motor (M103) |

**(a) Enlarged view of the alignment roller drive section**

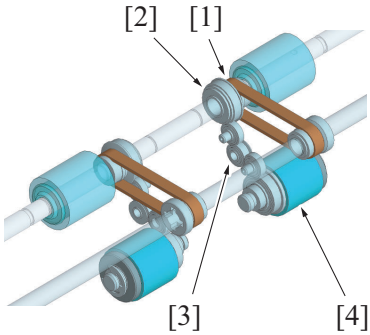


| | | | |
|---|---|---|---|
| [1] | Drive connecting belt | [2] | Drive connecting pulley |
| [3] | Drive connecting gear | [4] | Alignment roller |

**(b) Alignment roller drive section front view**

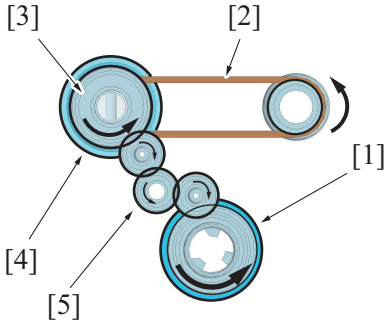


| | | | |
|---|---|---|---|
| [1] | Alignment roller | [2] | Drive connecting belt |
| [3] | Drive connecting pulley | [4] | Receiving roller |
| [5] | Drive connecting gear | - | - |

### (3) Batch solenoid

- The batch lever is driven by the batch solenoid.
- The batch lever and the batch guide wait at the upper position by the spring force. (home positions)
- When the batch solenoid turns on, the drive shaft for the batch lever rotates to rotate the batch lever downward.
- The batch guide is pressed down by the batch lever moving downward.
- When the batch solenoid turns off, the drive shaft for the batch lever rotates by the spring force to return the batch lever and the batch guide to the upper position.

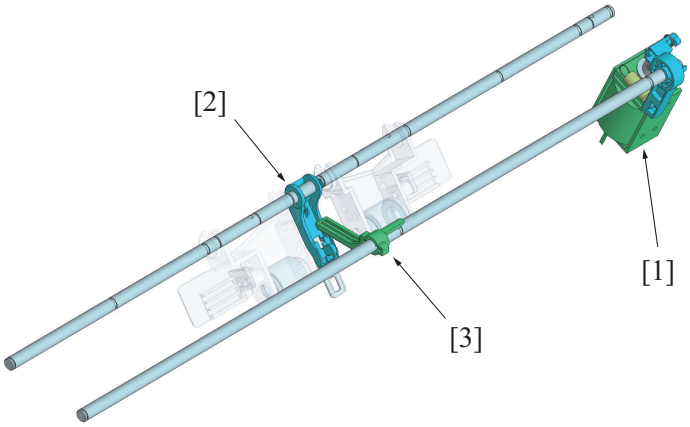


| | | | |
|---|---|---|---|
| [1] | Batch solenoid (SD102) | [2] | Batch guide |
| [3] | Batch lever | - | - |

**(a) Batch guide drive section front view**

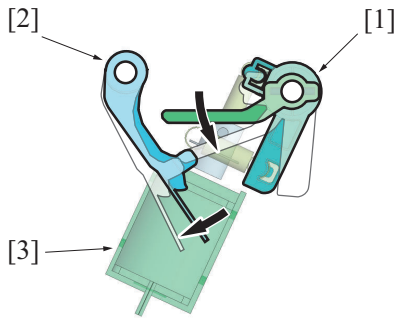


| | | | |
|---|---|---|---|
| [1] | Batch lever | [2] | Batch guide |
| [3] | Batch solenoid (SD102) | - | - |

### 7.2.3 Alignment tray section

- The alignment tray section has 2 types of drive mechanisms.

**(1) Alignment motor**

- The alignment motor drives the alignment plate back and forth.
- The alignment plate/Fr, and the alignment plate/Rr have individual alignment motors. This enables each alignment plate to independently move back and forth.

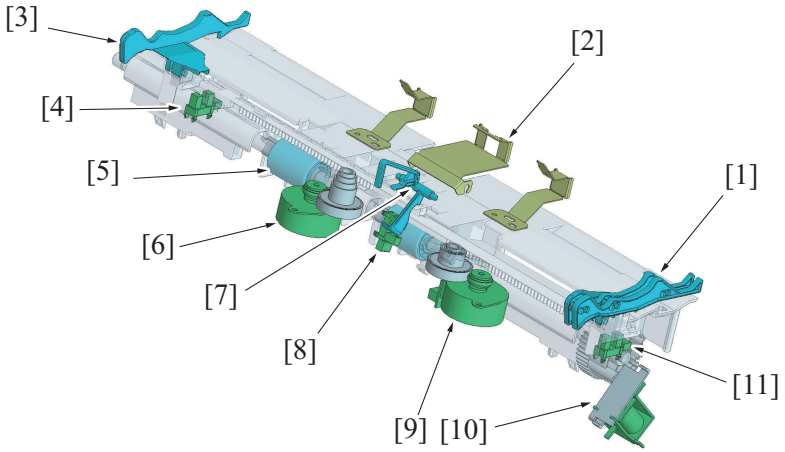


| | | | |
|---|---|---|---|
| [1] | Alignment plate/Fr | [2] | Paper stopper |
| [3] | Alignment plate/Rr | [4] | Alignment plate home sensor/R (PS109) |
| [5] | Paper exit roller/lower | [6] | Alignment motor/R (M106) |
| [7] | Paper surface detect sensor/1 actuator | [8] | Paper surface detect sensor/1 (PS102) |
| [9] | Alignment motor/F (M105) | [10] | Paper exit roller solenoid (SD103) |
| [11] | Alignment plate home sensor/F (PS108) | - | - |

**(2) Paper exit motor**

- The paper exit roller/lower is driven by the paper exit motor.
  For details of the paper exit roller/lower, see “Paper conveyance/receiving roller section drive” and “Paper exit roller/lower drive connecting process”.

## 7.3 Operation

### 7.3.1 Paper alignment overview

- At the alignment section, the paper is aligned for the jobs in sort offset mode, group offset mode, and staple mode.
- The paper is discharged to the exit tray without being in alignment for non-sort mode, non-group mode, non-staple mode, sort mode, and group mode.
- When the paper is aligned, it is switchbacked to the alignment section individually. When alignment is finished, the paper or the batch is discharged to the paper exit tray.
- There are two types for paper alignment as described below.
  - Paper FD Alignment: The operation to align rear edge of the paper in transportation direction.
  - Paper CD Alignment: The operation to align both sides of the paper in the width direction.

### 7.3.2 Paper alignment control (paper FD alignment)

- The operation to align rear edge of the paper in transportation direction is called "paper FD alignment".
- The paper from the transport section will be transported to the alignment tray by the alignment roller. The rear edge of the paper then is aligned by contacting the rear edge of the paper to the paper stopper.
- The batch guide moves down to hold the rear edge of the aligned paper.

**NOTE**
- **It prevents the aligned paper from being jumbled from when the 2nd sheet of paper is discharged in the alignment tray.**
- **The batch guide moves up when the next sheet of paper is transported to the alignment tray, as well as when the paper is discharged from the alignment tray to release the paper.**

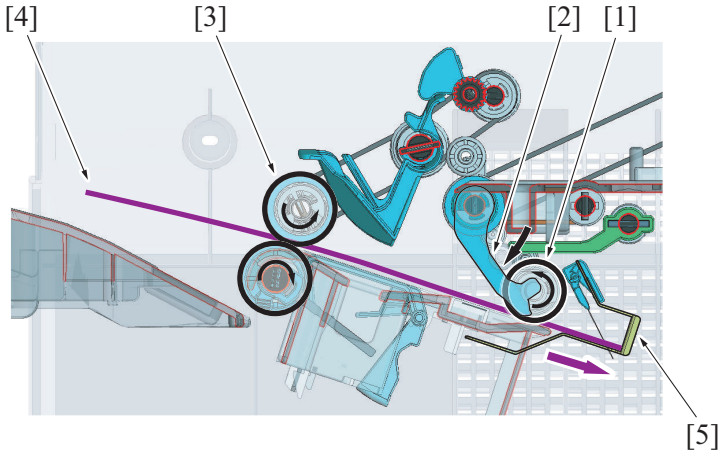


| | | | |
|---|---|---|---|
| [1] | Alignment roller | [2] | Batch guide |
| [3] | Paper exit roller/upper | [4] | Paper |
| [5] | Paper stopper | - | - |

### 7.3.3 Paper alignment control (paper CD alignment)

- The operation to align both sides of the paper in the width direction is called "paper CD alignment".
- The paper from the transport section is transported to the alignment tray by the alignment roller. The paper is aligned by contacting the alignment plate/Fr and Rr to both sides (forward-backward direction) of the paper.
- The home position of the alignment plate is detected by the alignment plate home sensor. (alignment plate home sensor/F, R)

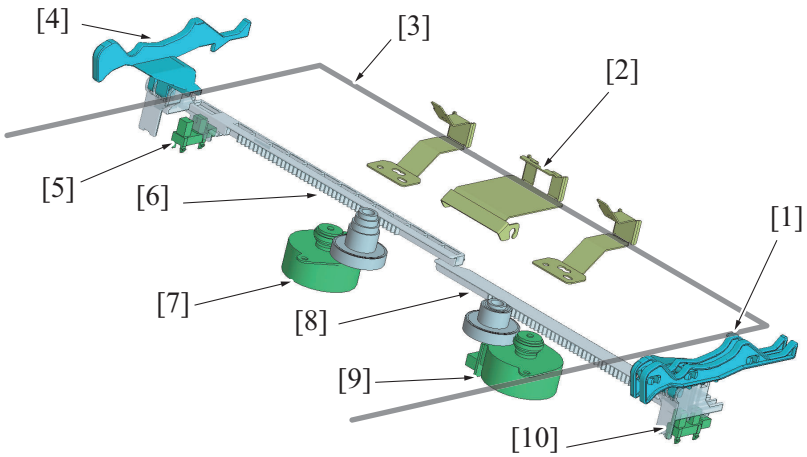


| | | | |
|---|---|---|---|
| [1] | Alignment plate/Fr | [2] | Paper stopper |
| [3] | Paper | [4] | Alignment plate/Rr |
| [5] | Alignment plate home sensor/R (PS109) | [6] | Slide gear/Rr |
| [7] | Alignment motor/R (M106) | [8] | Slide gear/Fr |
| [9] | Alignment motor/F (M105) | [10] | Alignment plate home sensor/F (PS108) |

#### (1) Alignment plate control when in staple mode

- When the staple mode is commended, the alignment plate/Fr and the alignment plate/Rr shift according to the paper width. The paper is aligned by the alignment plates contacting from both front and rear sides.
- The above alignment operation will be conducted for the paper for every job to align the edges of the paper batch. When the alignment is finished, stapling process will be conducted.

**NOTE**
- **When printed in staple mode, paper batch will be stapled and be discharged to the paper exit tray without being shifted.**

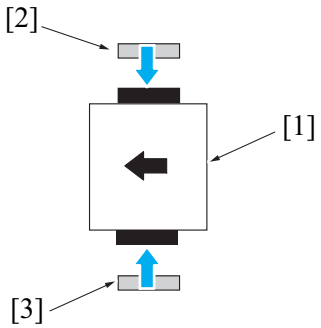


| | | | |
|---|---|---|---|
| [1] | Paper | [2] | Alignment plate/Rr (shifting to the front side) |
| [3] | Alignment plate/Fr (shifting to the rear side) | - | - |

### (2) Alignment plate control for sort offset mode and group offset mode

- When commanding offset in sort mode or group mode, the alignment plate/Fr or the alignment plate/Rr presses the paper from one side to the far side (or front side) depending on the paper width. This process shifts the paper position.
- The paper batches will be sorted out by repeating the process above.

**NOTE**

- **The offset value (shift value) of the paper is 30 mm.**
- **When "Offset" is not commanded in the sort mode or the group mode, only the sort print/group print will be conducted, and the paper will be discharged to the paper exit tray without being shifted.**

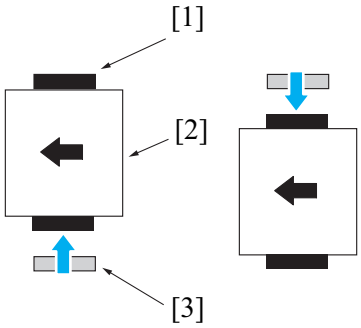


| | | | |
|---|---|---|---|
| [1] | Alignment plate/Rr | [2] | Paper |
| [3] | Alignment plate/Fr | - | - |

#### (a) Operation when shifting the paper to the front side

1. The alignment plate/Fr [3] will shift to the reference position at the front side. (The reference position differs depending on the paper size.)
2. The alignment plate/Rr [2] shifts according to the paper width. The paper [1] is pressed by the alignment plate/Rr [2] to be shifted to the front side.

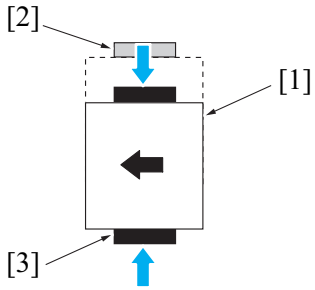


#### (b) Operation when shifting the paper to the rear side

1. The alignment plate/Rr [2] will shift to the reference position at the rear side. (The reference position differs depending on the paper size.)
2. The alignment plate/Fr [3] shifts according to the paper width. The paper [1] is pressed by the alignment plate/Fr [3] to be shifted to the rear side.

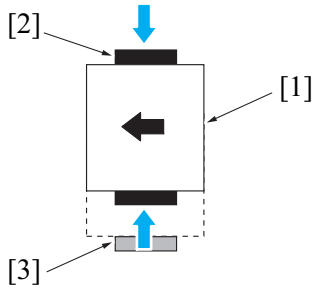


### (c) Paper receiving quantity

- When the quantity of the paper that is received into the alignment tray in sort offset mode or in group offset mode reaches the specified value, the paper batch in the alignment tray will be discharged to the paper exit tray.
  **NOTE**
  **Sample process for sort out:**
  1. **When the job requires making of two copies with 10 sheets A4 size document in sort offset mode, the paper batch is discharged when the sheet quantity reached 5 for the first copy.**
  2. **The remaining 5 sheets will be aligned to be discharged with the same shift position. This will make 10 aligned and discharged sheets on the paper exit tray.**
  3. **Then the shift position will be changed from the 1st copy to sort out the 2nd copy.**
  4. **The process for the second copy leaves 2 copies with 10 sheets each on the paper exit tray.**

Maximum batch discharge quantity for sort out

| Paper size | Paper type | |
|---|---|---|
| | • Thin paper (52 g/m2 to 59 g/m2)<br>• Plan paper (60 g/m2 to 90 g/m2)<br>• Recycled paper (52 g/m2 to 90 g/m2) | Thick paper (91 g/ m2 to 300 g/ m2) |
| 216 mm or less | 5 sheets | 3 sheets |
| More than 216 mm | 4 sheets | |

- When the "Paper load quantity" or "Paper load height" of the paper in the exit tray reaches to the specified value during sort offset mode or group offset mode, the exit tray is judged to be full.
  For details, see "Amount of paper stacking".
  **NOTE**
  - **The paper load height is detected by the paper level detection function.**
    **For details, see "PG.9.3.3 Paper level detect control".**

### 7.3.4 Alignment tray paper detect control

- The alignment tray has paper surface detect sensor/1, which detects the paper path and the paper receiving in the alignment tray.
- Paper surface detect sensor/1, detects that the paper is transported to the alignment tray by the actuator being pressed down by the paper which passes it.

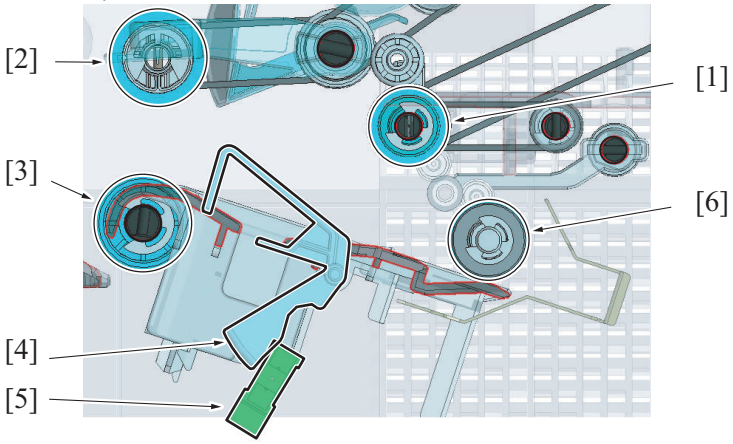


| | | | |
|---|---|---|---|
| [1] | Receiving roller | [2] | Paper exit roller/upper |
| [3] | Paper exit roller/lower | [4] | Paper surface detect sensor/1 actuator |
| [5] | Paper surface detect sensor/1 (PS102) | [6] | Alignment roller |

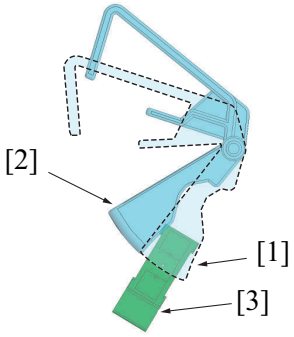


| | | | |
|---|---|---|---|
| [1] | Paper surface detect sensor/1 actuator: The paper is stored (blocked) | [2] | Paper surface detect sensor/1 actuator: Paper is not stored (unblocked) |
| [3] | Paper surface detect sensor/1 (PS102) | - | - |

**(1) When in non-sort mode, non-group mode, non-staple mode, sort mode, and group mode**

- The paper surface detect sensor/1 detects that the paper is transported to the paper exit roller /lower by the actuator being pressed down by the paper which passes it.
- When the paper alignment is finished, the sensor detects that the paper is discharged to the exit tray by the actuator returned to the original position with the paper discharged from the alignment tray.

**(2) When in sort offset mode, group offset mode, and staple mode**

- The paper surface detect sensor/1 detects that the paper is stored to the alignment tray by the actuator being pressed down by the switchbacked paper.
- When the alignment is finished, the sensor detects that the paper is discharged to the exit tray by the actuator returned to the original position.

# 8. STAPLER SECTION

## 8.1 Configuration/Drive

- The stapler waits at the home position at the front side.
- The stapler movement motor moves the stapler.
- When the stapler movement motor installed on the stapler mounting table rotates, the drive connecting gear rotates. When the drive connecting gear rotates, the stapler mounting plate and the stapler, shifts back and forth along the slide gear.

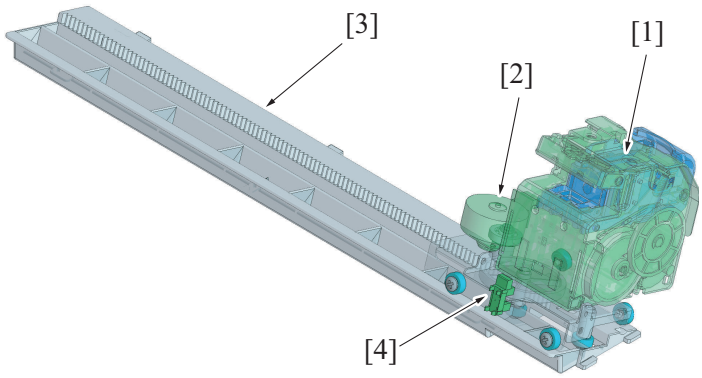


| | | | |
|---|---|---|---|
| [1] | Stapler | [2] | Stapler movement motor (M107) |
| [3] | Slide gear | [4] | Stapler home sensor (PS110) |

### 8.1.1 Stapler drive section top view

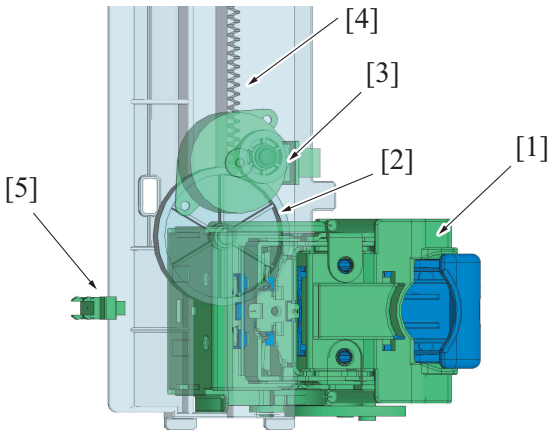


| | | | |
|---|---|---|---|
| [1] | Stapler unit | [2] | Stapler drive connecting gear |
| [3] | Stapler movement motor (M107) | [4] | Slide gear |
| [5] | Stapler home sensor (PS110) | - | |

## 8.2 Operation

### 8.2.1 Stapler positioning control

- The home position of the stapler is detected by the stapler home sensor.
- When in corner staple mode, the stapler waits at the home position and staples when the paper alignment is finished.
- When in 2 points staple mode, the stapler shifts to the first stapling position to conduct stapling. Then the stapler shifts to the second stapling position to conduct stapling. When the stapling is finished, the stapler returns to the home position.
- The stapling position is controlled besed on the number of pulses generated by the stapler movement motor. No position sensors are provided for the corner staple and two-point staple functions.

### 8.2.2 Stapling control

#### (1) Stapling operation

- The stapling operation is driven by the stapler motor.
- In the stapling operation, the clincher staple arm is lowered by the stapler motor. The clincher staple arm presses the sheets. (This is called clamp operation.) Then a staple is pushed up by the staple arm from the stapler side. The staple is pressed through the sheets and bent from the clincher staple arm side, so that the sheets are fastened together.
- The stapler motor then lifts the clincher staple arm and lowers the staple arm to complete the stapling operation.
- The number of sheets that user wishes to staple are placed into the alignment tray and the stapling operation is performed. However, if the number exceeds the upper limit, the set of sheets is delivered to the exit tray without being stapled.

Maximum stapling quantity

| Paper size | Maximum stapling quantity |
|---|---|
| A4S or less (small size) | 50 sheets * |
| Foolscap or more (large size) | 30 sheets |

- *: When there are small size sheets and large size sheets with same width at the same time, they are judged as large size sheets, and the maximum staple quantity becomes 30.
  Example: When there are A4 LEF and A3 SEF, the maximum stapling quantity is 30.

Overall view

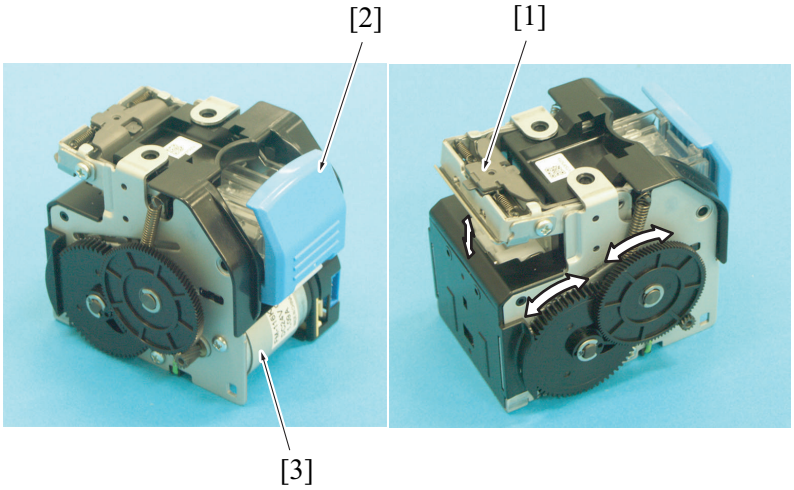


| | | | |
|---|---|---|---|
| [1] | Clincher staple arm | [2] | Staple cartridge |
| [3] | Stapler motor | - | - |

Front view

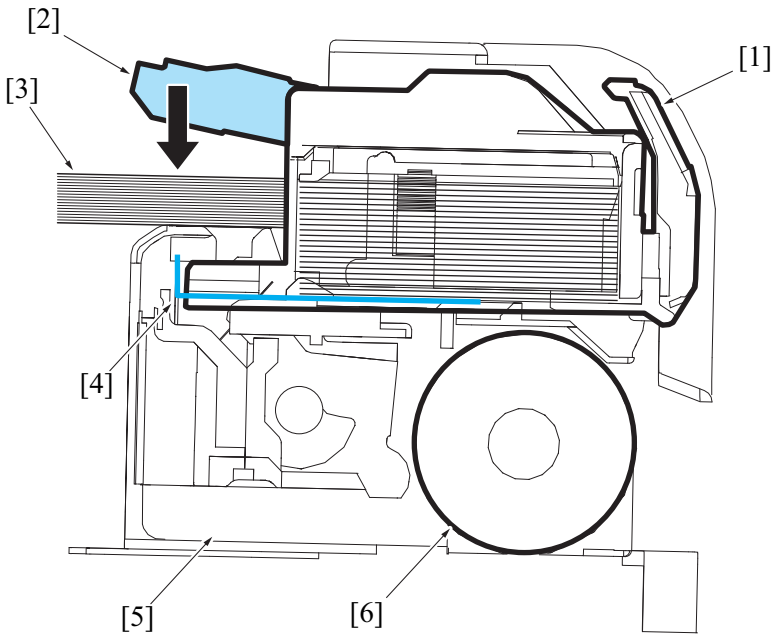


| | | | |
|---|---|---|---|
| [1] | Staple cartridge | [2] | Clincher staple arm |
| [3] | Paper bunch | [4] | Staple sheet (staple) |
| [5] | Stapler | [6] | Stapler motor (M14) |

### 8.2.3 Staple empty detection control

#### (1) Staple cartridge

- The stapler is provided with a staple cartridge used only for the stapler.
- To reload the stapler with staples, the staple cartridge is first loaded with staples (staple sheet type: 5000 staples) and then the staple cartridge is attached to the stapler.
  For information on how to load staplers, refer to the user's guide.

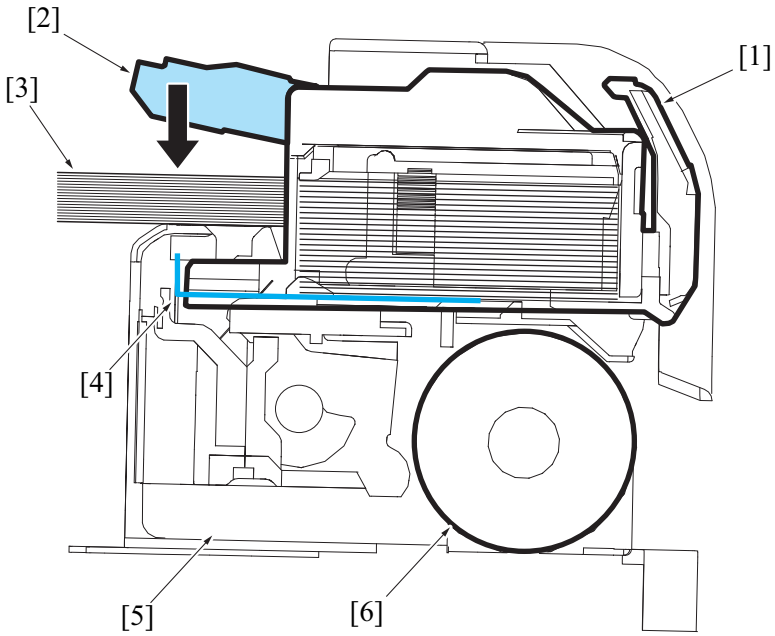


| | | | |
|---|---|---|---|
| [1] | Staple cartridge | [2] | Clincher staple arm |
| [3] | Paper bunch | [4] | Staple sheet (staple) |
| [5] | Stapler | [6] | Stapler motor |

### (2) Staple empty detection mechanism

- The stapler includes the self-priming sensor and staple empty sensor to detect the status of the staple cartridge and staples.
- The staple cartridge is loaded with staple sheets, and a staple sheet is conveyed to the clinch position (staple position) from the lowest one.

State where staple sheets are loaded

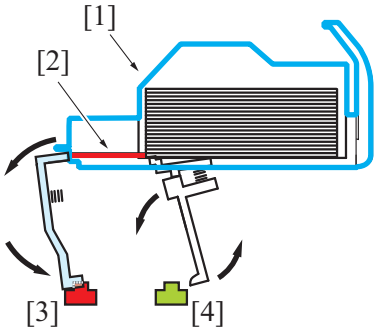


| | | | |
|---|---|---|---|
| [1] | Staple cartridge (loaded with staple sheets) | [2] | Staple sheet fed from the cartridge |
| [3] | Self-priming sensor (blocked) | [4] | Staple empty sensor (unblocked) |

- While the staple cartridge is loaded, if the trailing edge of the last staple sheet in the cartridge passes the actuator of the staple empty sensor, the actuator is raised by the spring force.
- When the actuator is raised, the staple empty sensor is blocked and machine determines that the cartridge is empty. The control panel displays to warn of the staple empty message.

State where the last staple sheet is fed

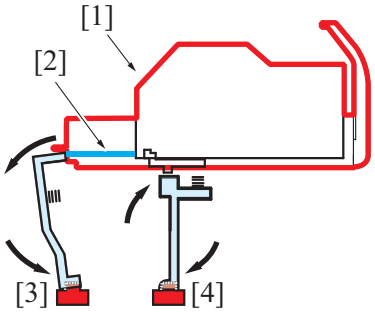


| | | | |
|---|---|---|---|
| [1] | Staple cartridge (staple empty) | [2] | Staple sheet (remainder) |
| [3] | Self-priming sensor (blocked) | [4] | Staple empty sensor (blocked) |

State where staple sheet runs out

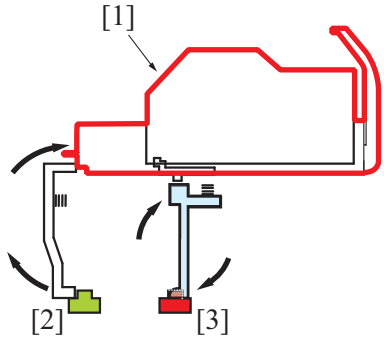


| | | | |
|---|---|---|---|
| [1] | Staple cartridge (empty) | [2] | Self-priming sensor (unblocked) |
| [3] | Staple empty sensor (blocked) | - | - |

- Even when the staple empty sensor detects the trailing edge of the last staple sheet, the staple sheet (staples: about 20) fed from the cartridge remains at the cartridge's front section. In this case, the actuator of the self prime sensor is pressed down by the leading edge of the staple sheet.
- If the actuator is pressed down, the self-priming sensor is blocked and machine determines that the staple sheet is fed to the clinch position (staple position).
- Even when staple empty is detected, printing is not disabled. Paper is delivered without being stapled.
- After staple empty is detected, when the staple cartridge is loaded with staple sheets and the stapler is loaded with the cartridge, the actuator of the staple empty sensor is pressed down by the staple sheets.
- When the actuator is pressed down, the staple empty sensor is unblocked and staple empty condition is cleared. At this point, the staple empty sensor detects the staple sheets (unblocked). However, if the leading edge of the staple sheet cannot be detected by the self-priming sensor (unblocked), the clinch operation is repeated up to 20 times to feed the leading edge of the staple sheet to the position (clinch position) where it can be detected by the self-priming sensor.

State where staple sheet runs out

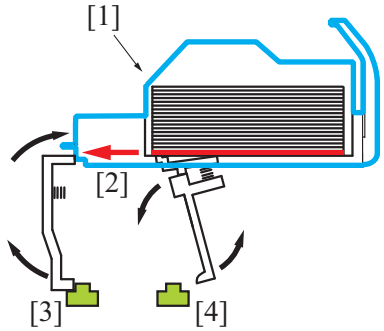


| | | | |
|---|---|---|---|
| [1] | Staple cartridge (loaded with staple sheets) | [2] | Staple sheet is fed by clinch operation |
| [3] | Self-priming sensor (unblocked) | [4] | Staple empty sensor (unblocked) |

- If the self prime sensor cannot detect the leading edge of the staple sheet after clinch operations, machine determines that the staple sheet is not properly fed (staple sheet is not properly set) and the control panel displays to warn of the staple empty message.
- If the staple empty message appears even after staple sheets are loaded, check whether the staple sheets is properly set in the staple cartridge. If the cartridge is clogged with a staple sheet, clear the sheet.
- If staple empty occurs, the stapler stays at the stapler home position. (Position where staples can be supplied only by opening the front door.)

### (a) When the staple cartridge is not loaded

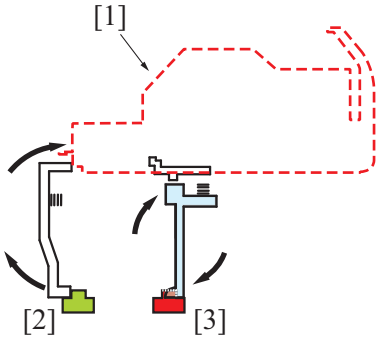


| | | | |
|---|---|---|---|
| [1] | Staple cartridge (not mounted) | [2] | Self-priming sensor (unblocked) |
| [3] | Staple empty sensor (blocked) | - | - |

- The actuator of the staple empty sensor is raised by the spring force. The staple empty sensor is blocked.
- If the staple empty message appears even after staple sheets are loaded, check whether the staple sheets is properly set in the staple cartridge. If the cartridge is clogged with a staple sheet, clear the sheet.

- The control panel displays to warn of the staple empty message.

### 8.2.4 Clogged staple detection control

- Stapling operation is performed by lowering of the clincher staple arm and lifting of the staple arm.
- The staple arm position is detected by the stapler home sensor located in the stapler.
- The stapler determines that the stapling operation is completed if the staple arm returns to the home position within the specified time after the stapling operation. If the staple arm does not return to the home position after the specified time has passed, the machine determines that staple trouble has occurred and trouble code C1109 appears on the control panel.

# 9. RECEIVING SECTION

## 9.1 Configuration

- In the receiving section, paper transported into the finisher is placed into paper exit tray. The tray up/down mechanism moves the tray down depending on the amount of discharged paper, so that a maximum of 500 sheets can be stored. The tray also includes the mechanism for detecting the number of stacked sheets.

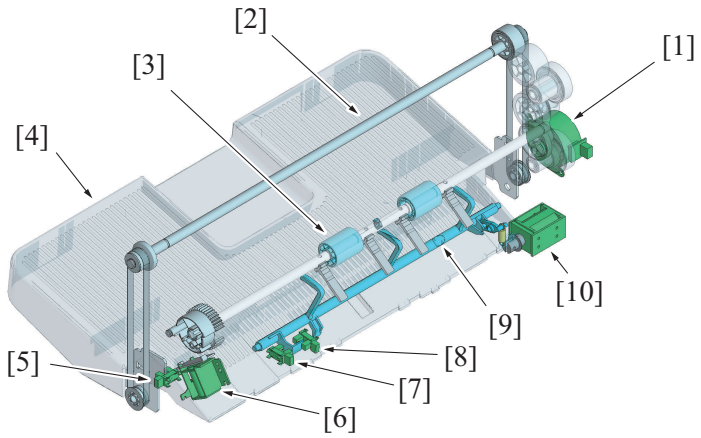


| | | | |
|---|---|---|---|
| [1] | Tray lift up motor (M109) | [2] | Shaft |
| [3] | Paper exit roller/lower | [4] | Paper exit tray |
| [5] | Paper exit tray home sensor (PS107) | [6] | Paper exit roller solenoid (SD103) |
| [7] | Paper surface detect sensor/2 (PS104) | [8] | Paper weight lever sensor (PS103) |
| [9] | Paper surface detect lever | [10] | Paper surface detect solenoid (SD101) |

## 9.2 Drive

### 9.2.1 Drive outline

- The driving source of the receiving section is the tray lift up motor, paper surface detect solenoid, and paper exit motor. The following parts are driven.

| Section | Driving source | Driving parts | Function |
|---|---|---|---|
| Tray lift up section | Tray lift up motor | Paper exit tray | The paper exit tray will be moved up/down according to the discharged paper load. |
| Paper level detect section | Paper surface detect solenoid | Paper surface detect lever | • The paper surface level detect lever is moved up/down to detect the paper load discharged to the paper exit tray.<br>• For consecutive printing, the rear edge of the paper discharged to the paper exit tray will be held by the paper surface level detect lever. It prevents the discharged paper from being misaligned by the paper that follows. |
| Paper exit roller section | Paper exit motor | Paper exit roller/lower | The paper is discharged to the paper exit tray. |
| | | Paper exit paddle | It rotates so that the rear edge of the paper which passed through the paper exit roller/lower will be held to be discharged to the paper exit tray/upper without fail. |

### 9.2.2 Tray lift up section

- The drive source is the tray lift up motor which moves the exit tray up/down.

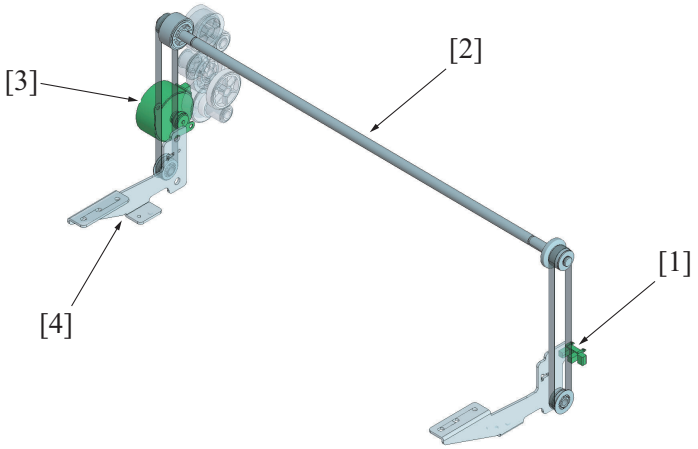


| | | | |
|---|---|---|---|
| [1] | Paper exit tray home sensor (PS107) | [2] | Shaft |
| [3] | Tray lift up motor (M109) | [4] | Tray lifter |

### 9.2.3 Paper level detect section

- The paper surface detect solenoid drives the paper surface level detect lever.
- The paper surface detect solenoid turns on to rotate the paper surface level detect lever downward.
- The paper surface detect solenoid turns off to allow the paper surface level detect lever to return to the upward position via spring force.

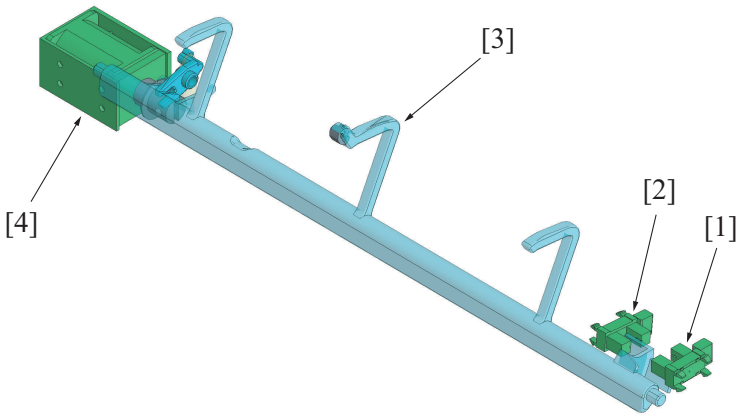


| | | | |
|---|---|---|---|
| [1] | Paper surface detect sensor/2 (PS104) | [2] | Paper weight lever sensor (PS103) |
| [3] | Paper surface detect lever | [4] | Paper surface detect solenoid (SD101) |

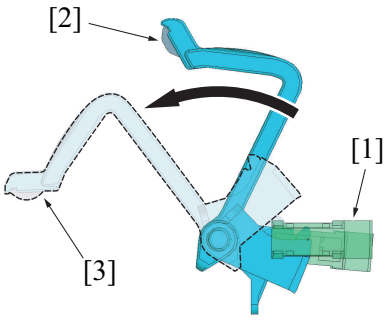


| | | | |
|---|---|---|---|
| [1] | Paper surface detect sensor | [2] | Paper surface detect lever (upper position: when solenoid is turned OFF) |
| [3] | Paper surface detect lever (lower position: when solenoid is turned ON) | - | - |

### 9.2.4 Paper exit roller section

- The paper exit motor drives the paper exit roller/lower.
  For details of the paper exit roller/lower, see “Paper conveyance/receiving roller section drive” and “Paper exit roller/lower drive connecting process”.
- The paper exit paddle (4 points) on the drive shaft at the paper exit roller/lower, also rotates with the paper exit roller/lower.

#### (1) Overall view

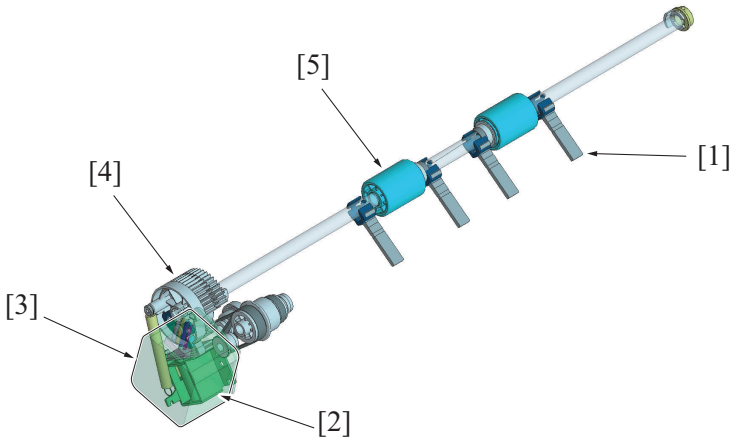


| | | | |
|---|---|---|---|
| [1] | Paper exit paddle | [2] | Paper exit roller solenoid (SD103) |
| [3] | Paper exit motor (M102) | [4] | Paper exit roller/lower drive gear |
| [5] | Paper exit roller/lower | - | - |

### (2) Paper press down paddle front view

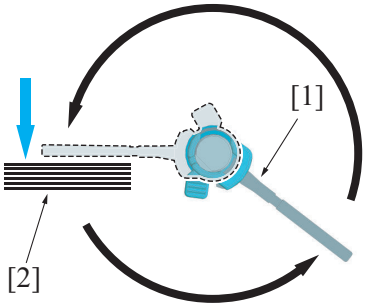


| | | | |
|---|---|---|---|
| [1] | Paper exit paddle (home position) | [2] | Paper on the paper exit tray |

## 9.3 Operation

### 9.3.1 Paper exit paddle control

- There are paper exit paddles (4 points) installed on the paper exit roller/lower shaft. It rotates so that the paper exit paddle holds the rear edge of the paper when the paper passes through the paper exit roller/lower, and to discharge the paper to the paper exit tray without fail.

#### (1) Paper discharge process

1. When the last paper is aligned, the paper exit roller/upper moves down to hold all the paper on the alignment tray with the paper exit roller/lower and to discharge the paper to the paper exit tray with paper exit roller/upper, paper exit roller/lower and the alignment roller.

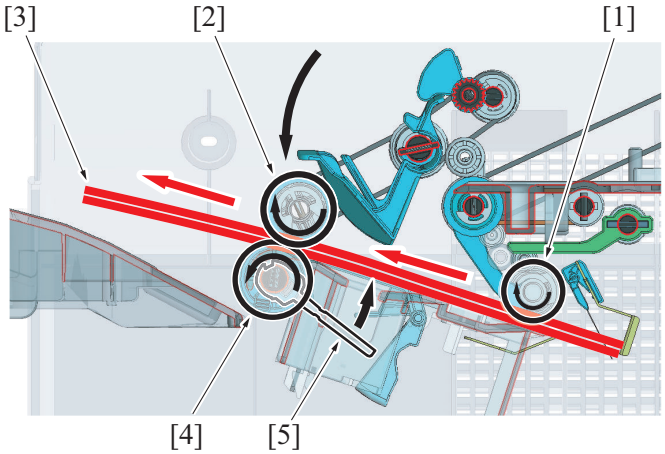


| | | | |
|---|---|---|---|
| [1] | Alignment roller | [2] | Paper exit roller/upper |
| [3] | Paper | [4] | Paper exit roller/lower |
| [5] | Paper exit paddle | - | - |

2. The paper exit paddle pushes out the rear edge of the paper which passed through the paper exit roller/lower to press the paper over the paper exit tray.

**NOTE**

- **The paper exit paddle is installed on the paper exit roller/lower shaft. It rotates one revolution and stops as the paper exit roller/lower does.**
  **For details of the paper exit roller/lower operation mechanism, see "PG.6.3.4 Paper exit roller/lower drive connecting process".**

3. The paper exit paddle presses the paper and returns to the home position.

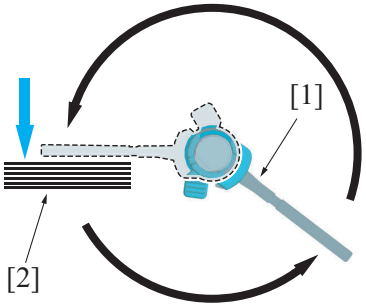


| | | | |
|---|---|---|---|
| [1] | Paper exit paddle (home position) | [2] | Paper on the paper exit tray |

**NOTE**

- **The paper exit paddle is made from soft rubber. It curves after discharging the paper to the paper exit tray to return to the home position inside the machine.**

4. After the paper exit paddle is retracted, the paper surface detect lever rotates to press the rear edge of the discharged paper.

For details of the paper surface detect lever operation mechanism, see “PG.9.3.3 Paper level detect control”

### 9.3.2 Paper exit tray lift up control

- The up/down motion of the paper exit tray is conducted by the tray lift up motor.
- When the tray lift up motor rotates forward, the tray drive belt rotates forward through the gear to lift up the paper exit tray.
- When the tray lift up motor rotates in a reverse direction, the tray drive belt rotates in a reverse direction through the gear to lower the paper exit tray.
- The paper exit tray home sensor detects the home position of the paper exit tray.
- The height of the paper exit tray is detected by the paper level detect mechanism. When a job is commanded, the paper surface detect lever operates to move the paper exit tray up/down according to the detected result.
  For details of the control, see “PG.9.3.3 Paper level detect control”.

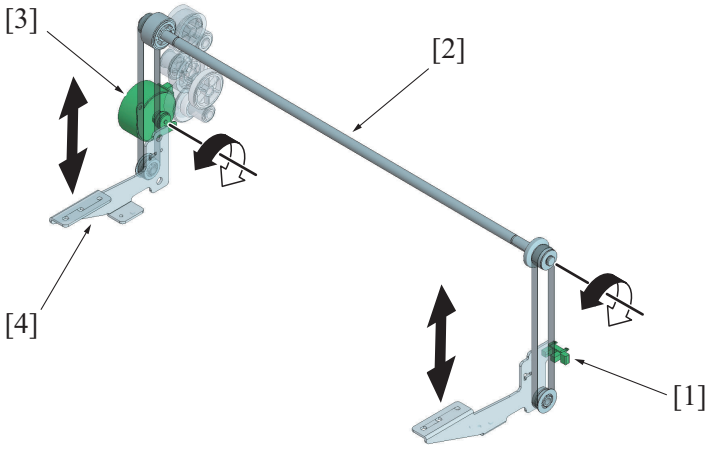


| | | | |
|---|---|---|---|
| [1] | Paper exit tray home sensor (PS107) | [2] | Shaft |
| [3] | Tray lift up motor (M109) | [4] | Tray lifter |

### 9.3.3 Paper level detect control

- The paper level is detected by the paper weight lever sensor and paper surface detect sensor/2. The height of the paper exit tray is controlled according to the detected result.
- The paper surface detect actuator rotates when the paper surface detect solenoid turns on, to hold the rear top face of the paper on the paper exit tray. The rotation value of the paper surface detect lever changes at this point, according to the paper load and the height of the paper exit tray.
- The paper weight lever sensor and paper surface detect sensor/2 are installed at different heights. (Paper weight lever sensor: high, paper surface detect sensor/2: low) The paper surface detect lever has two light shield plates with different lengths, which provides different detection result for each sensor with the rotation value found by the paper surface detect lever. The current paper level is judged according to the result so that the paper exit tray will be controlled to move up/down to the suitable height.
- The paper level is detected every time the paper is discharged to monitor the paper height. For consecutive printing, it also prevents discharged paper from being misaligned by the following paper being discharged.
- When the paper exit tray home sensor detects the paper exit tray while the paper exit tray is moving down, the paper exit tray is judged to be full and the warning message will be displayed on the control panel, informing that the paper exit tray is full.
- The paper surface detect lever moves down when the paper is removed from the paper exit tray. When the lever moves down, the paper is detected to be removed, and the paper exit tray full display will be released.

Paper level detect table

| Paper surface detect sensor/2 | Paper weight lever sensor | Paper level | Exit tray lift up control |
|---|---|---|---|
| Unblocked | Blocked | High | • The paper exit tray is at the higher position than the reference position. The tray lift up motor will be rotated in reverse direction and move the paper exit tray down to the reference position.<br>• When the paper exit tray home sensor detects the paper exit tray while the paper exit tray is moving down, the paper exit tray is judged to be full, and the following printing job will be prohibited. |
| Blocked | Blocked | | |
| Blocked | Unblocked | Reference position | • Reference position. The paper exit tray will not move up/down. |
| Unblocked | Unblocked | Low | • The paper exit tray is at the lower position than the reference position. The tray lift up motor will rotate to move the exit tray up to the reference position. |

### (1) Perspective view

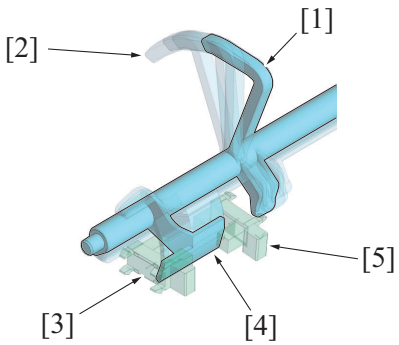


| | | | |
|---|---|---|---|
| [1] | Paper surface detect lever (Paper level: home position) | [2] | Paper surface detect lever (Paper level: low) |
| [3] | Paper surface detect sensor/2 (PS104) (Unblocked) | [4] | Light shield plate |
| [5] | Paper weight lever sensor (PS103) (Blocked) | - | - |

### (2) Front view

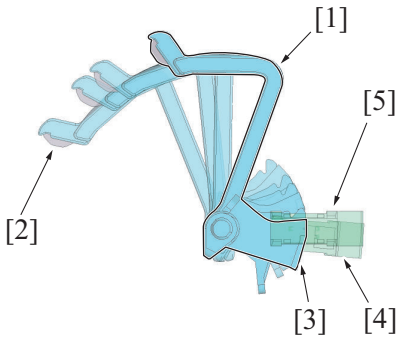


| | | | |
|---|---|---|---|
| [1] | Paper surface detect lever (Paper level: home position) | [2] | Paper surface detect lever (Paper level: low) |
| [3] | Light shield plate | [4] | Paper surface detect sensor/2 (PS104) (Blocked) |
| [5] | Paper weight lever sensor (PS103) (Unblocked) | - | - |

### (3) Amount of paper stacking at the paper exit tray

- For details of the amount of paper stacking at the paper exit tray, see “C PRODUCT SPECIFICATIONS/FS-533”.

# PH THEORY OF OPERATION FS-534/FS-534SD/RU-513/PK-520

## 1. FINISHER OUTLINE

- Install the staple finisher FS-534 to the MFP enables the following functions. "Sort function, Sort offset function", "Group function, Group offset function", "Staple function", "Sort staple function", and "Large capacity receiving function".
- The "Punch function" can be added by installing the optional function (Punch Kit PK-520).
- On the staple finisher FS-534SD, "Saddle stitching function and Tri-folding function" is provided in addition to all functions that are provided on the staple finisher FS-534.

| Option | Summary of the additional functions |
|---|---|
| RU-513 | Connecting the bizhub C368/C308/C258 and FS-534. |
| PK-520 | Punch function |
| FS-534SD | FS-534 + Folding function, Saddle stitching function, Tri-folding function |

NOTICE

- SYSTEM CONFIGURATION
- FS-534 PRODUCT SPECIFICATIONS
- PK-520 PRODUCT SPECIFICATIONS
- FS-534SD PRODUCT SPECIFICATIONS

# 2. PAPER PATH

## 2.1 Sub tray

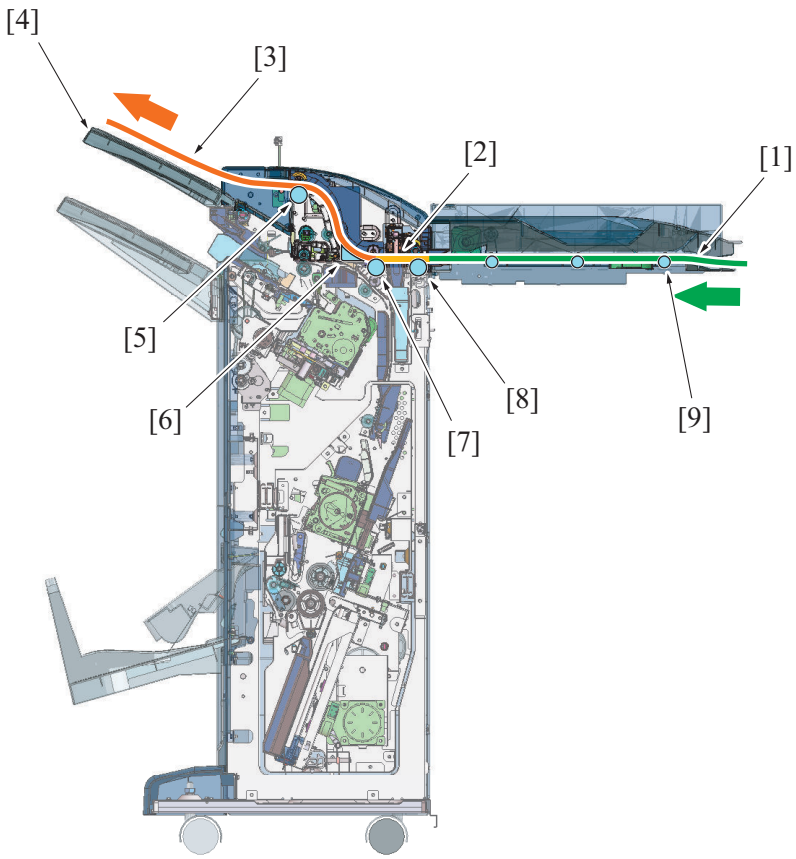


| | | | |
|---|---|---|---|
| [1] | Paper feed (Paper path from the exit section of MFP) | [2] | Punching holes |
| [3] | Paper exit | [4] | Sub tray |
| [5] | Sub tray section exit roller | [6] | Paper path switching gate (lower position) |
| [7] | FNS section transport roller | [8] | FNS section paper feed roller |
| [9] | RU section horizontal transport roller | - | - |

## 2.2 Main tray

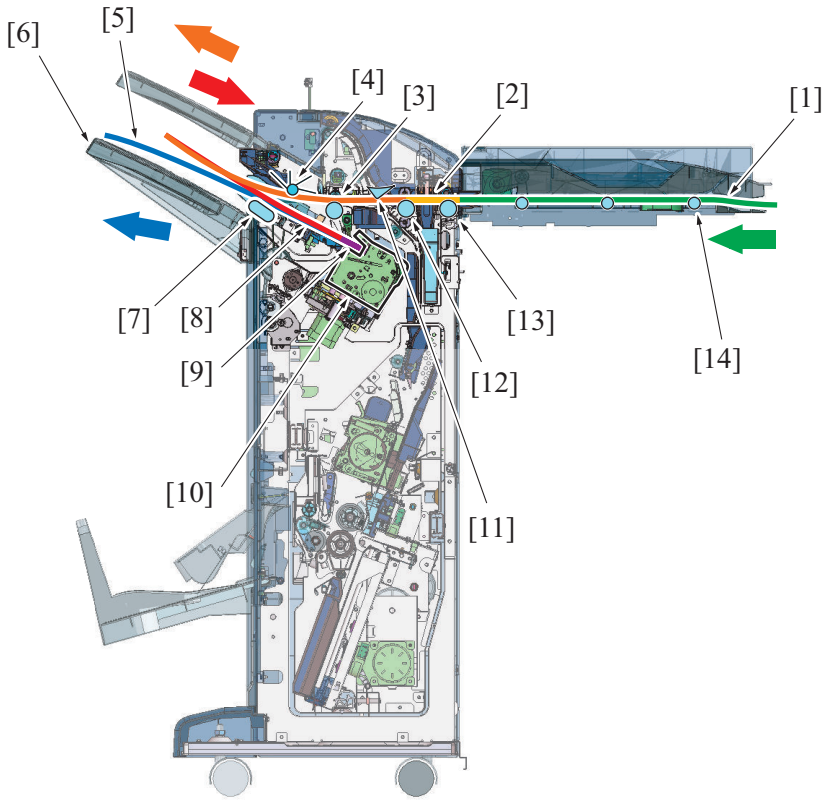


| | | | |
|---|---|---|---|
| [1] | Paper feed (Paper path from the exit section of MFP) | [2] | Punching holes |
| [3] | Paper transport | [4] | Exit section upper paddle |
| [5] | Paper exit | [6] | Main tray |
| [7] | Exit section lower paddle | [8] | Paper alignment |
| [9] | Staple (staple mode) | [10] | Stapler |
| [11] | Paper path switching gate (upper position) | [12] | FNS section transport roller |
| [13] | FNS section paper feed roller | [14] | RU section horizontal transport roller |

## 2.3 Saddle tray

**NOTE**

- **FS-534SD only**

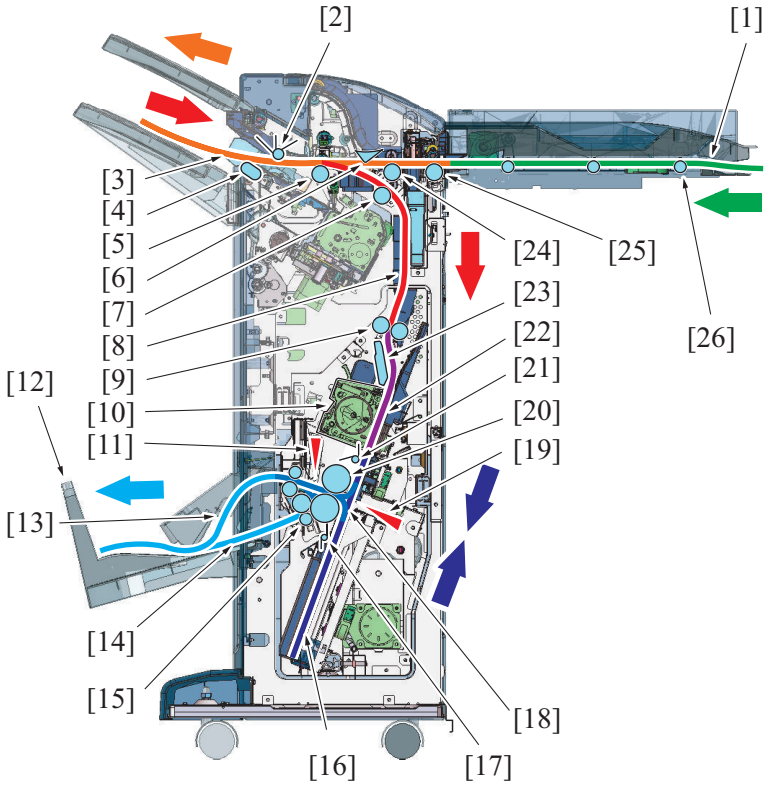


| | | | |
|---|---|---|---|
| [1] | Paper feed (Paper path from the exit section of MFP) | [2] | Exit section upper paddle |
| [3] | Paper transport (switchback) | [4] | Exit section lower paddle |
| [5] | Receiving roller | [6] | Paper path switching gate (upper position) |
| [7] | FNS section exit roller | [8] | Paper vertical transport |
| [9] | Saddle section paper feed roller | [10] | Center stapler |
| [11] | Tri-folding knife | [12] | Saddle tray |
| [13] | Paper batch exit (center staple mode) | [14] | Paper batch exit (tri-folding mode) |
| [15] | Tri-folding roller | [16] | Paper alignment (FD) |
| [17] | Center folding section lower paddle | [18] | Paper fold (center folding, tri-folding) |
| [19] | Center fold knife | [20] | Center folding roller |
| [21] | Center folding section upper paddle | [22] | Paper alignment (CD), center staple |
| [23] | Curl cover | [24] | FNS section transport roller |
| [25] | FNS section paper feed roller | [26] | RU section horizontal transport roller |

## 2.4 3rd tray

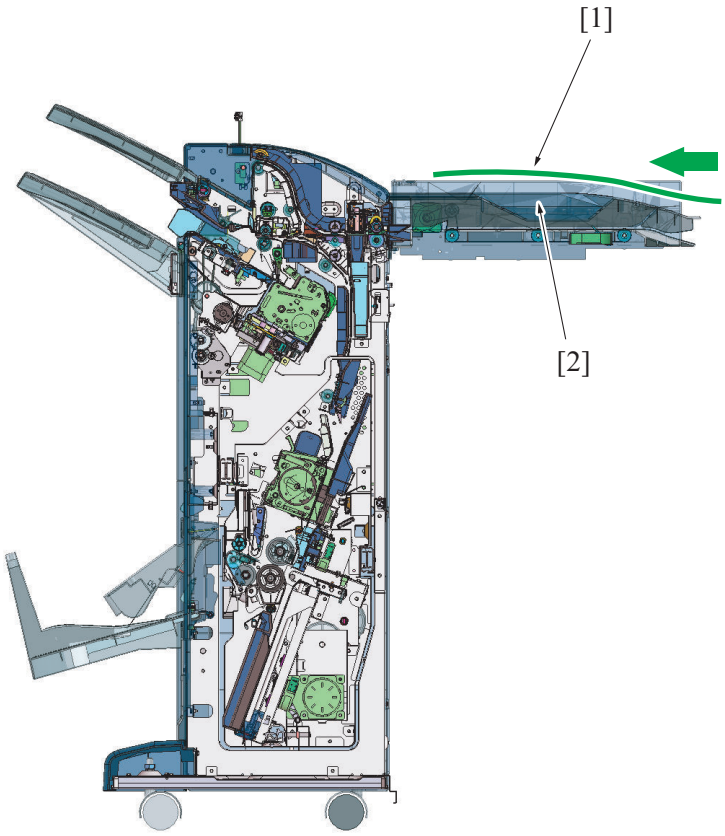


| | | | |
|---|---|---|---|
| [1] | Paper exit | [2] | RU section (horizontal transport section): Relay Unit RU-513 |

# 3. CONFIGURATION

## 3.1 Section configuration

- The staple finisher FS-534 is installed with the finisher main body being fixed on the left side of the MFP. At the time of maintenance, open and close the RU door, the upper door and front door on the finisher. A docking mechanism to slide the finisher from the MFP is not provided.
- The FS-534 comes standard with a sorting mechanism and a stapling mechanism.
- The FS-534SD includes folding function, saddle stitching function, and tri-folding function in addition to all of the functions of the FS-534.
- Also, the optional punch kit PK-520 and the saddle stitcher can be added to the FS-534/534SD.
- At maintenance of the FS-534SD saddle section, pull the saddle section frontward from the finisher.

### 3.1.1 Exterior view

#### (1) FS-534

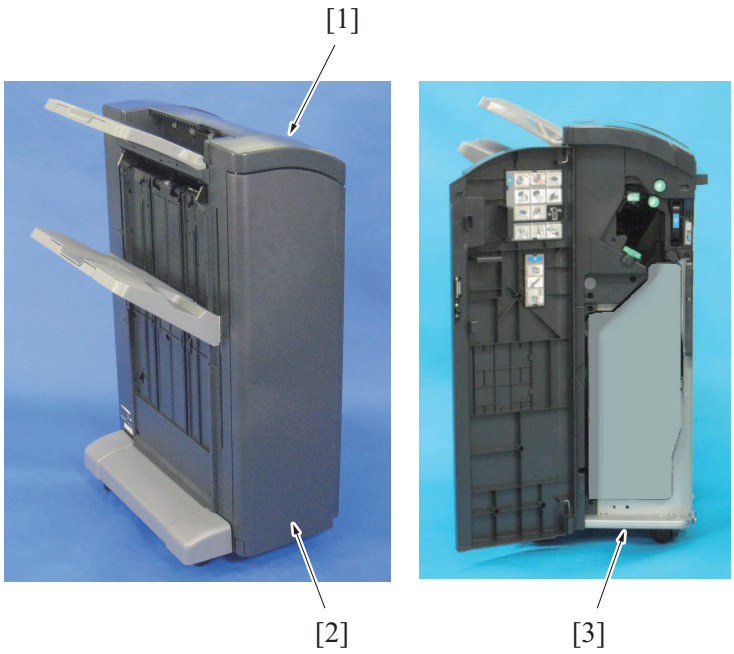


| | | | |
|---|---|---|---|
| [1] | FS-534 | [2] | Front door |
| [3] | Front door inside | - | - |

#### (2) FS-534SD

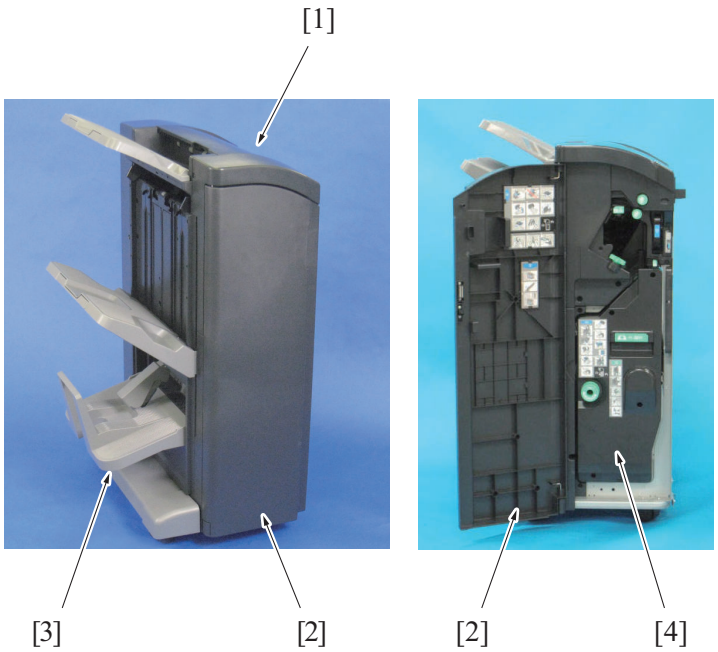


| | | | |
|---|---|---|---|
| [1] | FS-534SD | [2] | Front door |
| [3] | Saddle tray section | [4] | Saddle section |

**(a) Saddle section**

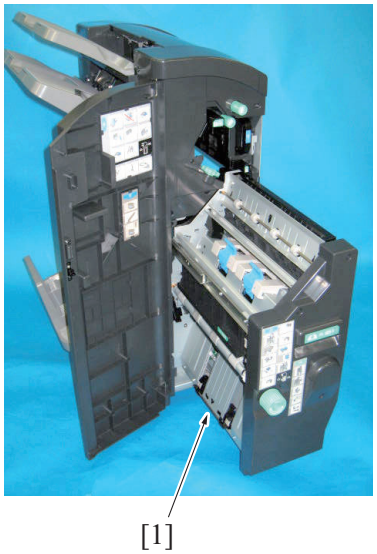


| | | | |
|---|---|---|---|
| [1] | Saddle section slide status | - | - |

**(3) RU-513**

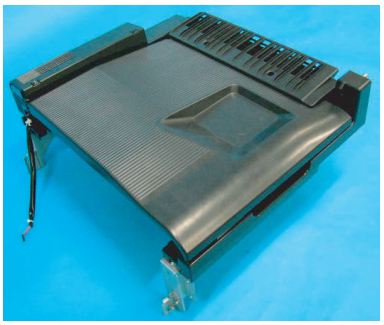

### 3.1.2 Section configuration

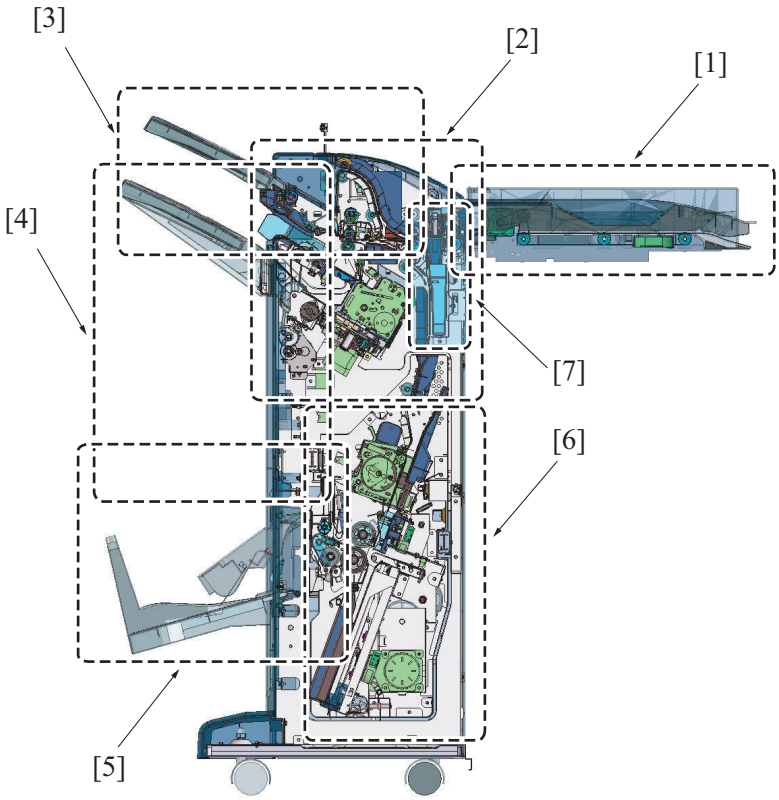


| | | | |
|---|---|---|---|
| [1] | RU section (horizontal transport section): Relay unit RU-513 | [2] | FNS section (finisher section) |
| [3] | Exit section (sub tray) | [4] | Exit section (main tray) |

| | | | |
|---|---|---|---|
| [5] | Saddle tray section (FS-534SD only) | [6] | Saddle section (FS-534SD only) |
| [7] | Punch section (only when the punch kit PK-520 is mounted) | - | - |

## 3.2 Main electrical part configuration

### 3.2.1 Control board, motor

#### (1) RU section, Punch section, FNS section

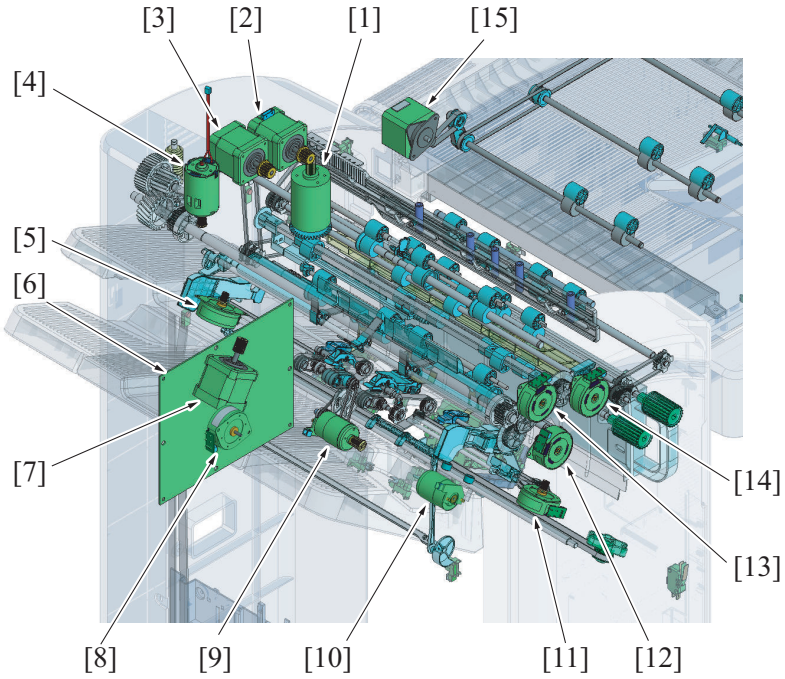


| | | | |
|---|---|---|---|
| [1] | Punch drive motor (M1): Punch kit | [2] | FNS entry transport motor (M2) |
| [3] | FNS discharge motor (M3) | [4] | Main tray up/down motor (M11) |
| [5] | Alignment motor/Rear (M8) | [6] | FS control board (FSCB) |
| [7] | Side stapler movement motor (M13) | [8] | Paper receiving control motor (M12) |
| [9] | Pre-eject drive motor (M9) | [10] | Bundle eject motor (M10) |
| [11] | Alignment motor/Front (M7) | [12] | Trailing edge stopper motor (M6) |
| [13] | FNS paddle motor (M5) | [14] | Receiving roller retraction motor (M4) |
| [15] | RU transport motor (M1) | - | - |

#### (2) Saddle section

**NOTE**

- **FS-534SD only**

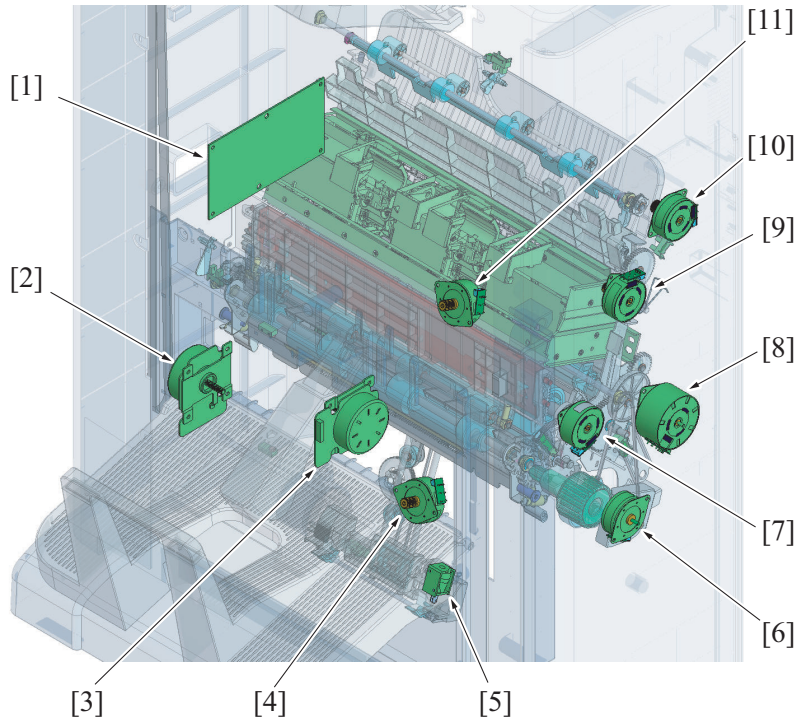


| | | | |
|---|---|---|---|
| [1] | SD drive board (SDDB) | [2] | Center fold roller motor (M5) |
| [3] | Center fold knife motor (M9) | [4] | Stopper drive motor (M4) |
| [5] | Stopper solenoid (SD1) | [6] | SD paddle motor (M7) |
| [7] | Tri-folding guide motor (M6) | [8] | Center fold guide motor (M8) |
| [9] | Paper discharge control motor (M2) | [10] | SD transport motor (M1) |
| [11] | Alignment motor (M3) | - | - |

### 3.2.2 Sensor

#### (1) FNS section

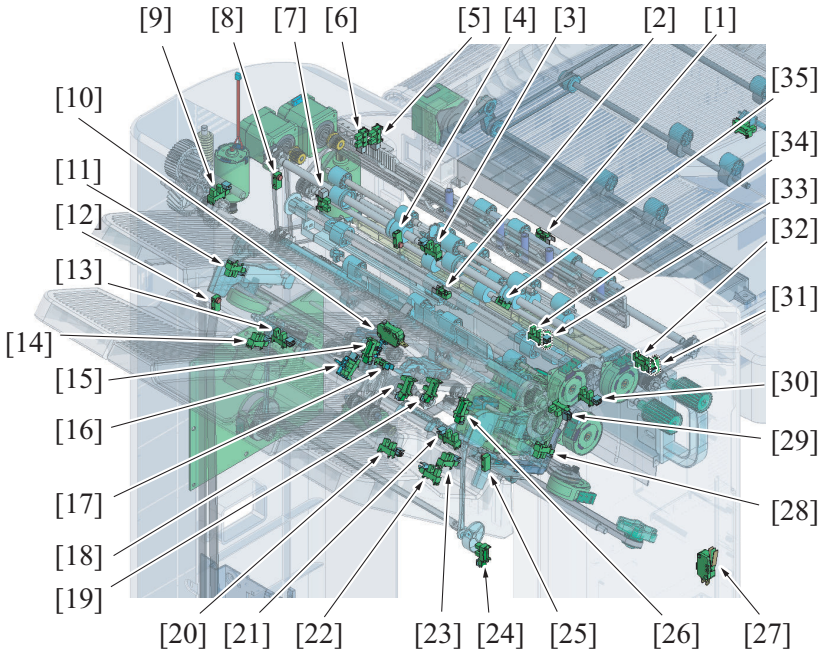


| | | | |
|---|---|---|---|
| [1] | FNS entrance sensor (PS4) | [2] | Main tray exit sensor (PS16) |
| [3] | Sub tray exit sensor (PS8) | [4] | Punch dust full sensor/in (PS5): Punch kit |
| [5] | Punch home sensor (PS1): Punch kit | [6] | Punch position sensor (PS2): Punch kit |
| [7] | Punch motor sensor (PS3): Punch kit | [8] | Sub tray full detection sensor/out (PS9) |
| [9] | Stacker motor sensor (PS25) | [10] | Main tray upper position detect switch (SW2) |
| [11] | Alignment plate/R home sensor (PS13) | [12] | Main tray upper sensor/out (PS6) |
| [13] | Main tray upper position sensor/R (PS26) | [14] | Stapler home position sensor (Rear) (PS23) |
| [15] | Gripper position detection sensor (PS19) | [16] | Gripper home position sensor (PS18) |
| [17] | Staple stacker paper detection sensor (PS31) | [18] | Pre-eject away sensor (PS22) |

| | | | |
|---|---|---|---|
| [19] | Pre-eject home sensor (PS21) | [20] | Pre-eject encorder sensor (PS15) |
| [21] | Main tray upper position sensor/F (PS27) | [22] | Gripper motor sensor (PS17) |
| [23] | Stapler position sensor (Center) (PS24) | [24] | Paper delivery control sensor (PS28) |
| [25] | Main tray upper sensor (PS7) | [26] | Trailing edge stopper home position detection sensor (PS20) |
| [27] | Front door open detect switch (SW1) | [28] | Alignment plate/F home sensor (PS12) |
| [29] | Upper paddle home position detection sensor (PS14) | [30] | Receiving roller retraction sensor (PS11) |
| [31] | Punch dust full sensor/out (PS4): Punch kit | [32] | Exchange folded paper output sensor (PS30) |
| [33] | Sub tray full detection sensor/in (PS10) | [34] | Upper cover open/close detection sensor (PS32) |
| [35] | Saddle exit sensor (PS5) | - | - |

### (2) RU section (horizontal transport section)

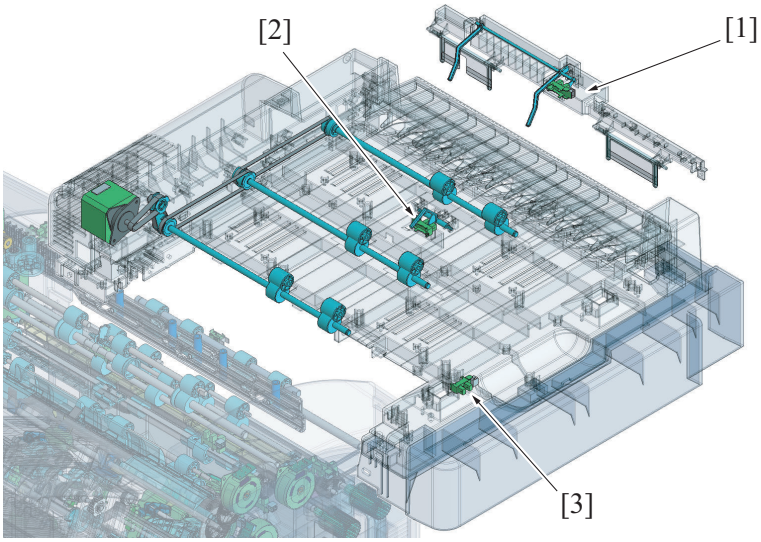


| | | | |
|---|---|---|---|
| [1] | 3rd exit tray full sensor (PS1) | [2] | RU entrance sensor (PS2) |
| [3] | RU cover open/close detection sensor (PS3) | - | - |

### (3) Saddle section

**NOTE**

- **FS-534SD only**

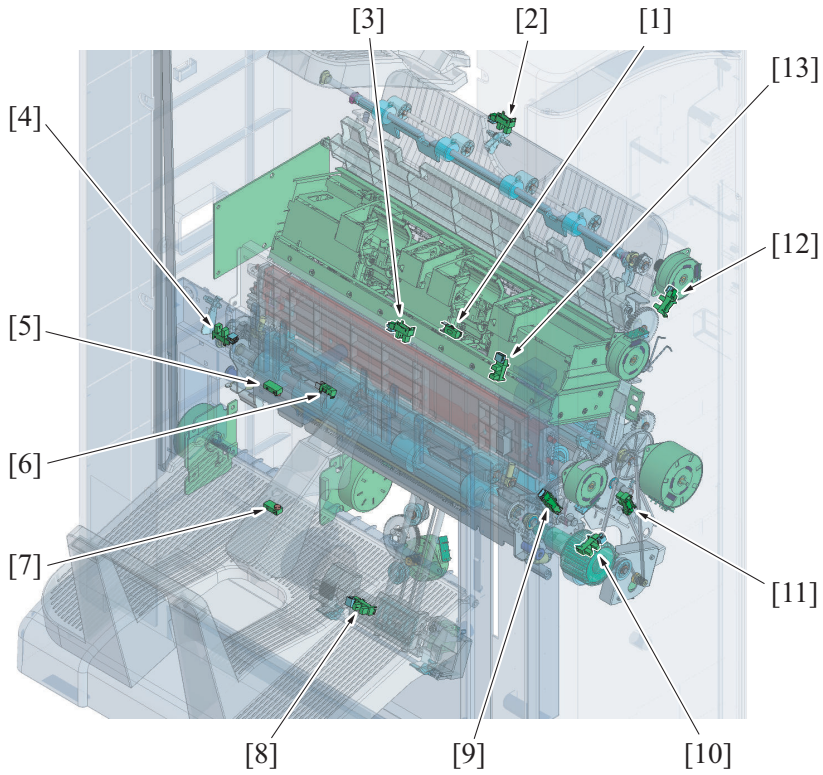


| | | | |
|---|---|---|---|
| [1] | Center staple/fold stacker paper detect sensor (PS3) | [2] | SD entrance sensor (PS1) |
| [3] | Center fold knife home sensor (PS8) | [4] | Main tray full detection sensor (PS29) * : finisher |

| | | | |
|---|---|---|---|
| [5] | Booklet tray empty detection sensor/in (PS13) | [6] | Fold exit sensor (PS12) |
| [7] | Booklet tray empty detection sensor/out (PS14) | [8] | Stopper home sensor (PS6) |
| [9] | Tri-folding gate home sensor (PS11) | [10] | Paddle home sensor (PS5) |
| [11] | Guide home sensor (PS7) | [12] | Curl cover detection sensor (PS2) |
| [13] | Alignment home sensor (PS4) | - | - |

- *: The position to install the main tray full detection sensor differs between the FS-534 and FS-534SD. (The main tray capacity for the FS-534 is 3,000 sheets. The capacity for the FS-534SD is 2,000 sheets.) The illustration shows the sensor position for the FS-534SD.

## 3.3 Main mechanical part configuration

### 3.3.1 Overall configuration

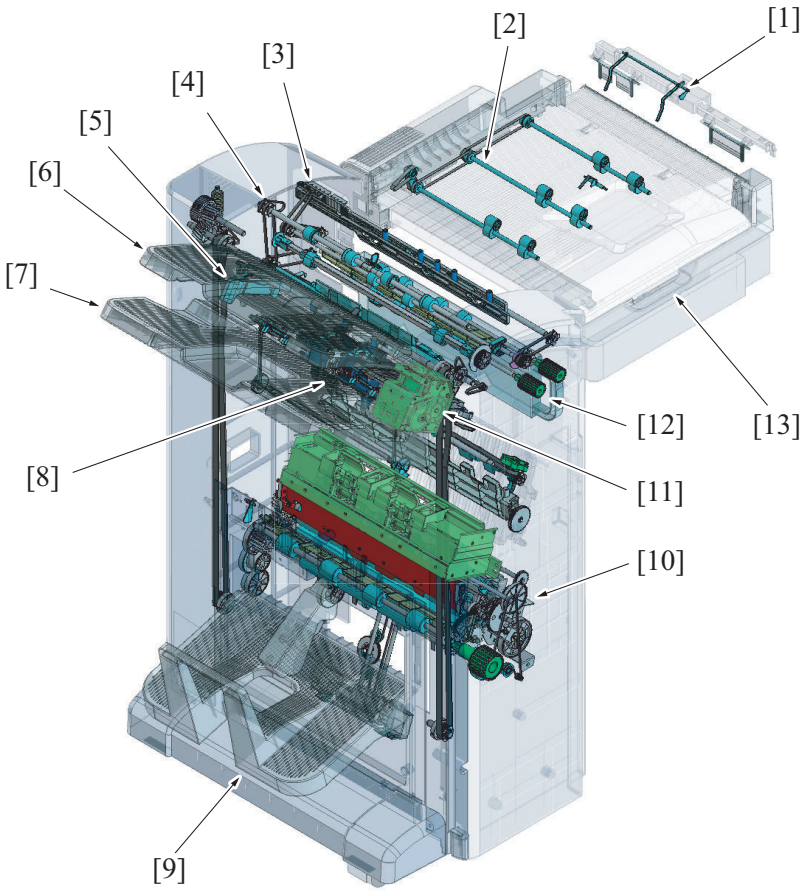


| | | | |
|---|---|---|---|
| [1] | Exit tray full detection mechanism (when paper exit/ reverse section of the MFP is mounted) | [2] | RU section horizontal transport roller |
| [3] | Punch section: Punch kit PK-520 | [4] | Paper feed/transport section |
| [5] | Alignment section | [6] | Sub tray |
| [7] | Main tray | [8] | Exit section |
| [9] | Saddle tray | [10] | Saddle section: Finisher FS-534SD only |
| [11] | Staple section | [12] | Punch dust box: Punch kit PK-520 |
| [13] | RU section (horizontal transport section) | - | - |

### 3.3.2 RU section (horizontal transport section)

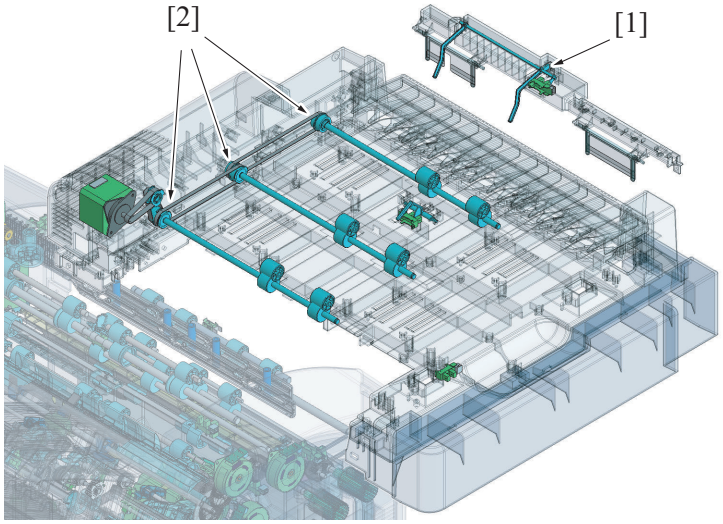


| | | | |
|---|---|---|---|
| [1] | 3rd exit tray full detection sensor actuator | [2] | RU section horizontal transport roller |

### 3.3.3 Paper feed/transport section, Alignment section, Tray section

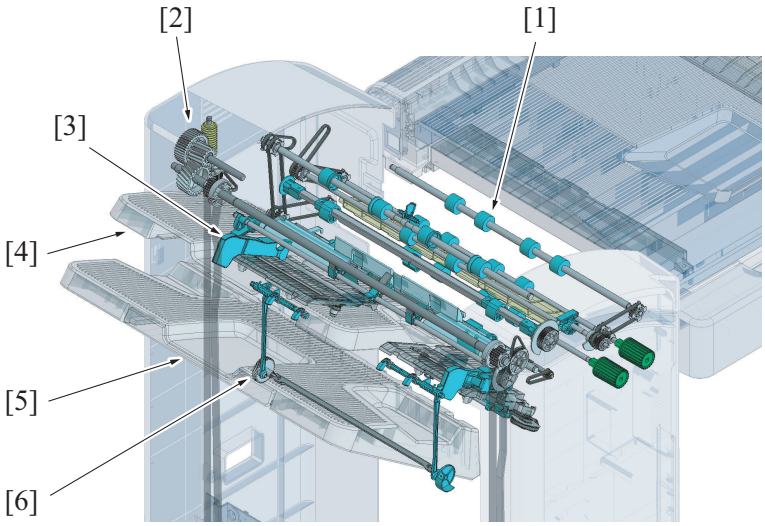


| | | | |
|---|---|---|---|
| [1] | Paper feed/transport section | [2] | Main tray up/down section |
| [3] | Alignment section | [4] | Sub tray |
| [5] | Main tray | [6] | Main tray paper surface detection mechanism |

### 3.3.4 Punch section, Staple section, Exit section

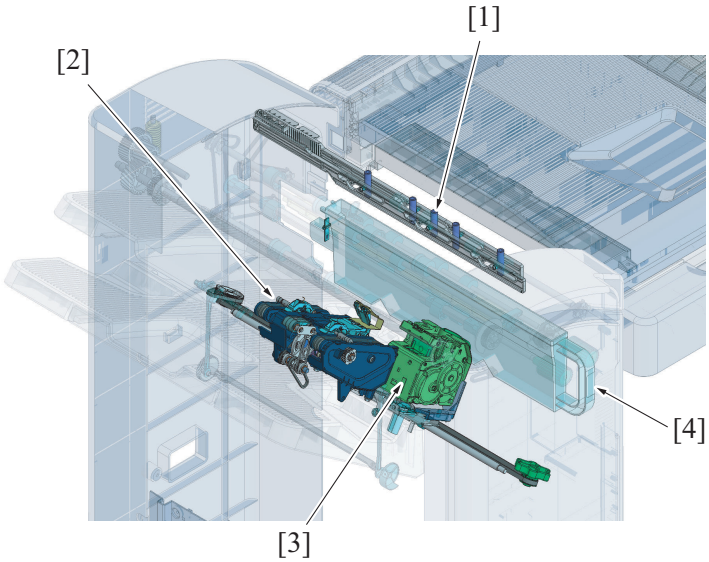


| | | | |
|---|---|---|---|
| [1] | Punch section: Punch kit PK-520 | [2] | Exit section |

| | | | |
|---|---|---|---|
| [3] | Staple section | [4] | Punch dust box: Punch kit PK-520 |

### 3.3.5 Saddle section

**NOTE**

- **FS-534SD only**

#### (1) Alignment section

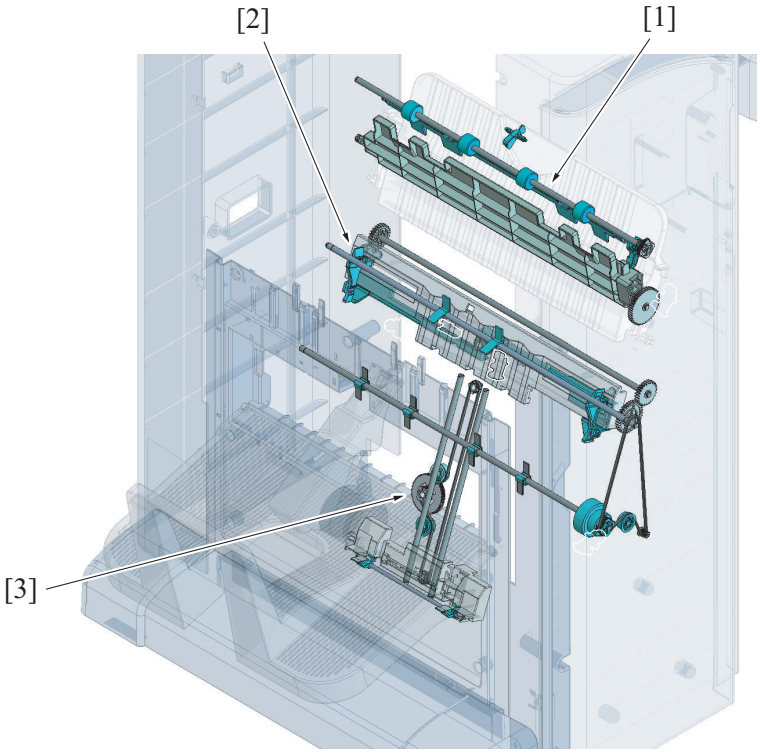


| | | | |
|---|---|---|---|
| [1] | Saddle stitcher paper feed section | [2] | Center folding stacker CD alignment section |
| [3] | Center folding stacker FD alignment section | - | - |

#### (2) Folding section

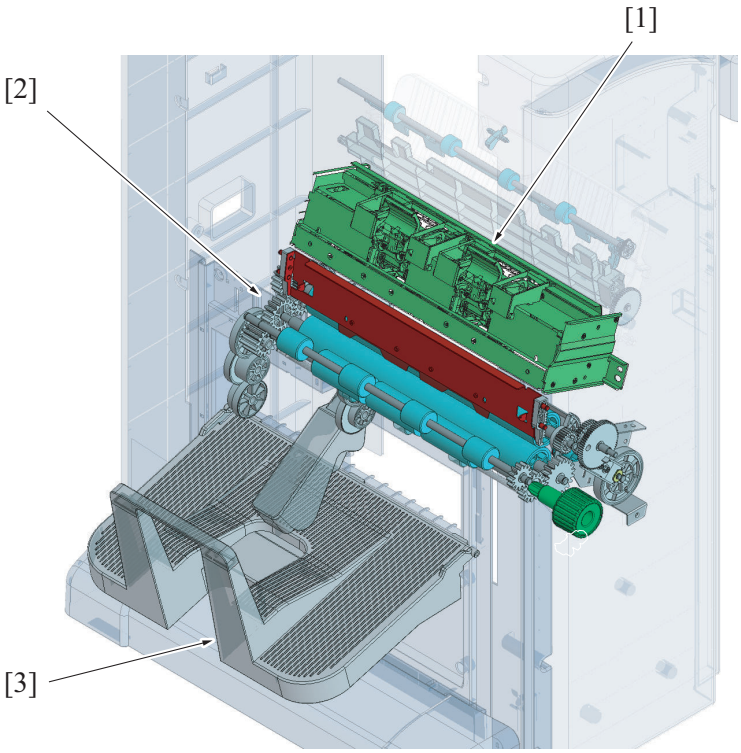


| | | | |
|---|---|---|---|
| [1] | Center staple unit | [2] | Folding section (center folding section/tri-folding section) |
| [3] | Saddle tray | - | - |

## 3.4 Main roller configuration

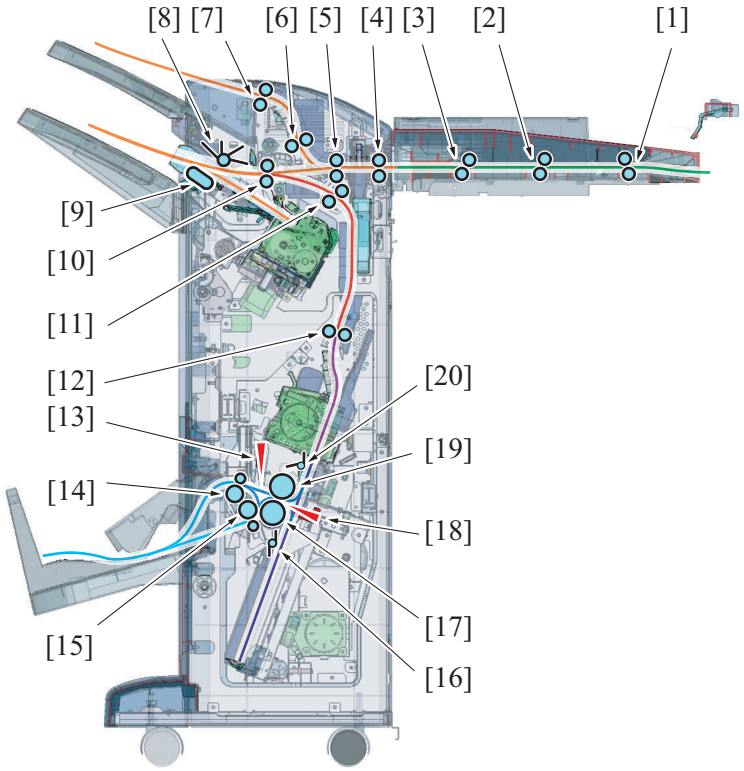


| | | | |
|---|---|---|---|
| [1] | RU section horizontal transport roller/1 | [2] | RU section horizontal transport roller/2 |
| [3] | RU section paper feed roller/3 | [4] | FNS section paper feed roller |
| [5] | FNS section transport roller | [6] | Sub tray section vertical transport roller |
| [7] | Sub tray section exit roller | [8] | Exit section upper paddle |
| [9] | Exit section lower paddle | [10] | Receiving roller |
| [11] | FNS section exit roller | [12] | Saddle section paper feed roller |
| [13] | Tri-folding knife | [14] | Saddle section exit roller |
| [15] | Tri-folding roller | [16] | Center folding section lower paddle |
| [17] | Center folding roller/2 | [18] | Center folding knife |
| [19] | Center folding roller/1 | [20] | Center folding section upper paddle |

# 4. FNS SECTION

## 4.1 Door open/close detection mechanism

### 4.1.1 Front door open/close detection mechanism

- The front door open detect switch installed at the front right of the FNS section detects open/close of the finisher's front door.
- Open the front door, the warning screen will display on the control panel. All the setting operations and jobs are disabled while the warning screen is displayed. The printing job is interrupted, and the paper being transported causes a paper misfeed. The warning screen can be cancelled by closing the door.

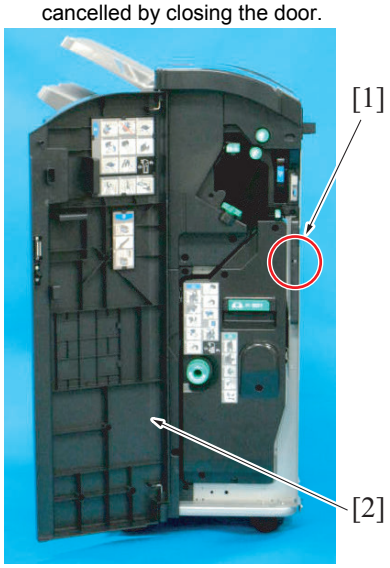


| | | | |
|---|---|---|---|
| [1] | Front door open detect switch (SW1) | [2] | Front door |

### 4.1.2 Upper door open/close detection mechanism

- The upper cover open/close detection sensor is installed at the front left of the FNS section to detect open/close of the finisher upper door.
- Open the upper door, the warning screen will display on the control panel. All the setting operations and jobs are disabled while the warning screen is displayed. The printing job is interrupted, and the paper being transported causes a paper misfeed. The warning screen can be cancelled by closing the door.

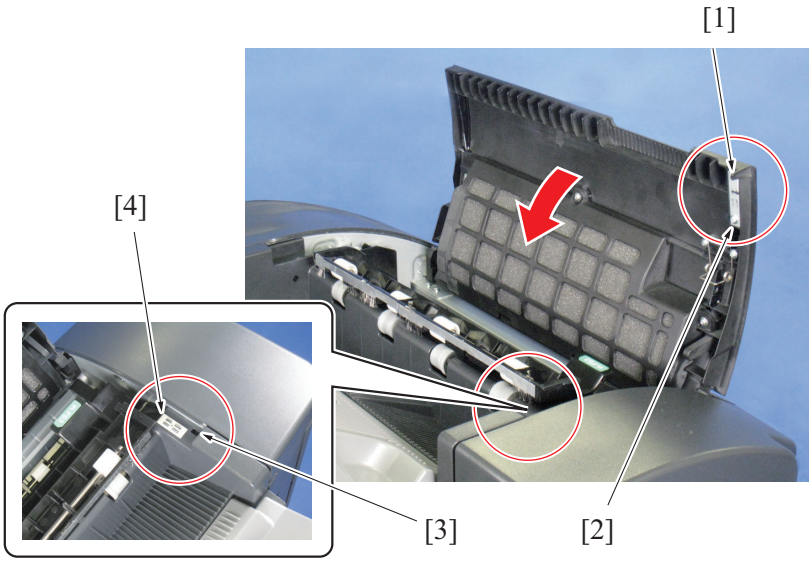


| | | | |
|---|---|---|---|
| [1] | Upper door open/close detection lever | [2] | Upper door lock plate |
| [3] | Upper cover open/close detection sensor (PS32) | [4] | Upper door lock magnet |

# 5. RU SECTION (RU-513)

## 5.1 Configuration

- The RU section (horizontal transport section) transfers paper that is fed out from the MFP paper exit section to an optional finisher paper feed section.
- The RU door is installed at the upper part of the RU section. Access to the horizontal transport roller is enabled by opening the door upward. To be used for periodical cleaning of the roller and dealing with the paper misfeed at the RU section and other necessary operations.

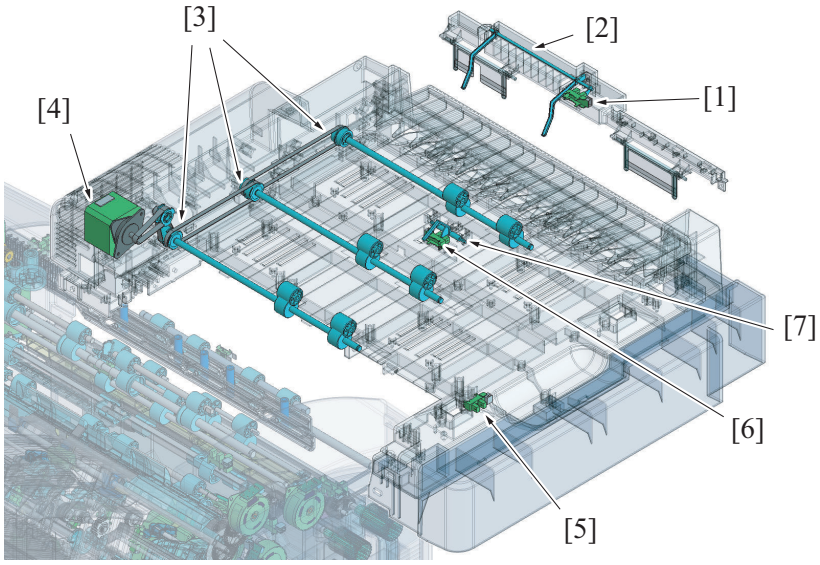


| | | | |
|---|---|---|---|
| [1] | 3rd exit tray full sensor (PS1): Exit section of MFP | [2] | 3rd exit tray full sensor actuator: Exit section of MFP |
| [3] | RU section horizontal transport roller | [4] | RU transport motor (M1) |
| [5] | RU cover open/close detection sensor (PS3) | [6] | RU entrance sensor (PS2) |
| [7] | RU entrance sensor actuator | - | - |

3rd tray on the RU section

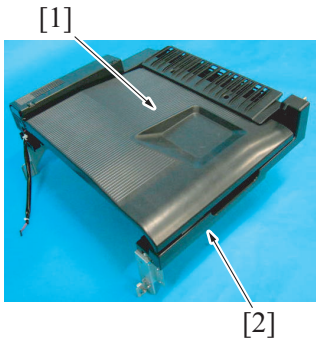


| | | | |
|---|---|---|---|
| [1] | 3rd tray | [2] | Relay unit RU-513 |

RU section door is opened

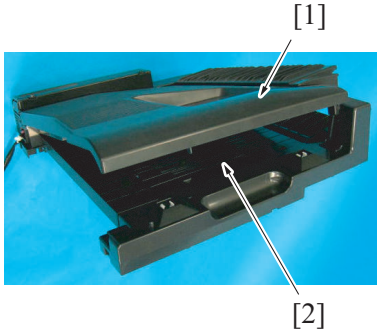


| | | | |
|---|---|---|---|
| [1] | RU section door | [2] | Horizontal transport section |

## 5.2 Drive

- The RU transport motor drives the RU section. It drives three RU section horizontal transport roller.
- The RU section horizontal transport roller is driven using the drive belt.

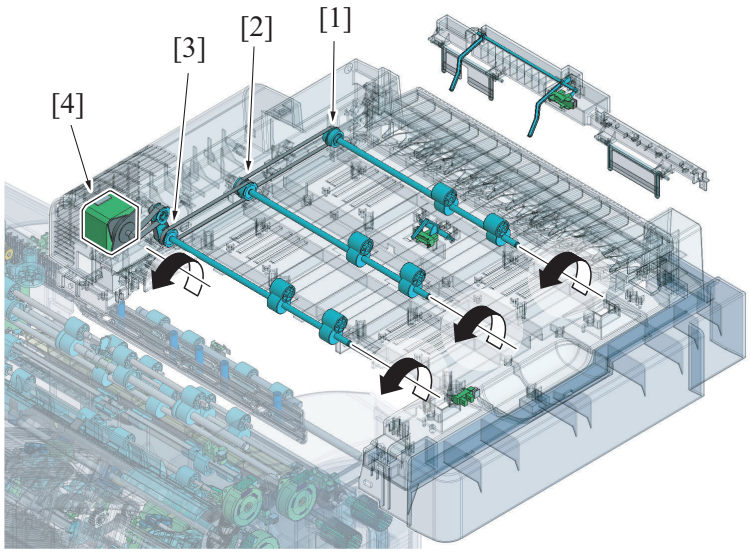


| | | | |
|---|---|---|---|
| [1] | RU section horizontal transport roller/1 | [2] | RU section horizontal transport roller/2 |
| [3] | RU section horizontal transport roller/3 | [4] | RU transport motor (M1) |

## 5.3 Operation

### 5.3.1 Paper transport control

- It transports the paper that is discharged from the lower exit of the MFP paper exit section, to the RU section with the feed guide.
- It transports the paper to the FNS section, using three RU section horizontal transport rollers.
- The RU entrance sensor actuator is installed downstream of the paper path of the RU section horizontal transport roller/1, and the RU entrance sensor detects the paper transportation status.

Perspective view

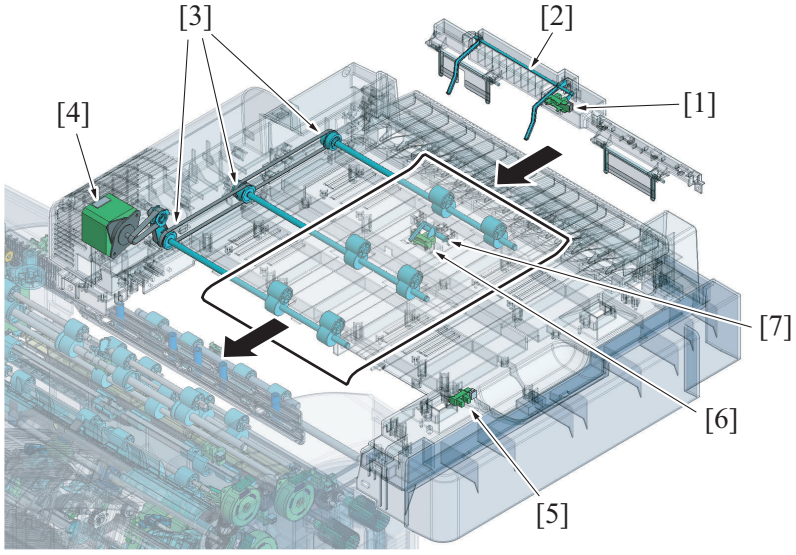


| | | | |
|---|---|---|---|
| [1] | 3rd exit tray full sensor (PS1) | [2] | 3rd exit tray full sensor actuator |
| [3] | RU section horizontal transport roller | [4] | RU transport motor (M1) |
| [5] | RU cover open/close detection sensor (PS3) | [6] | RU entrance sensor (PS2) |
| [7] | RU entrance sensor actuator | - | - |

Front view

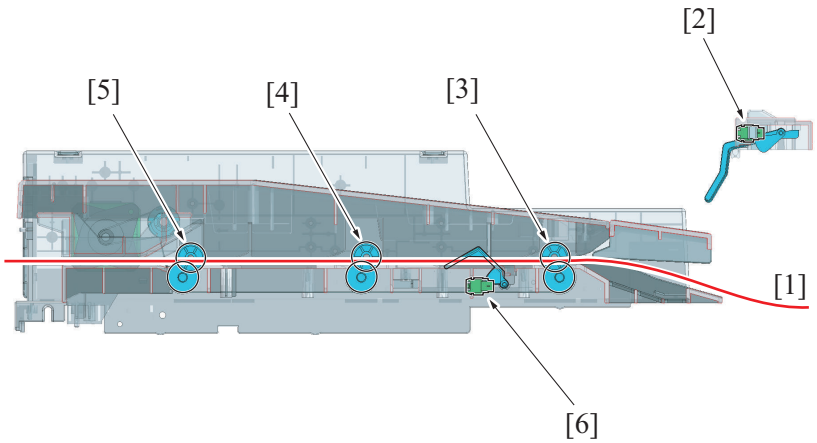


| | | | |
|---|---|---|---|
| [1] | Paper | [2] | 3rd exit tray full sensor (PS1) |
| [3] | RU section horizontal transport roller/1 | [4] | RU section horizontal transport roller/2 |
| [5] | RU section horizontal transport roller/3 | [6] | RU entrance sensor (PS2) |

### 5.3.2 RU section door open/close detection mechanism

- The RU cover open/close detection sensor installed at the front left of the RU section, detects open/close of the RU door.
- Opening the RU door, the warning screen will display on the control panel. All the setting operations and jobs are disabled while the warning screen is displayed. The printing job is interrupted, and the paper being transported causes paper misfeed. The warning screen can be cancelled by closing the door.

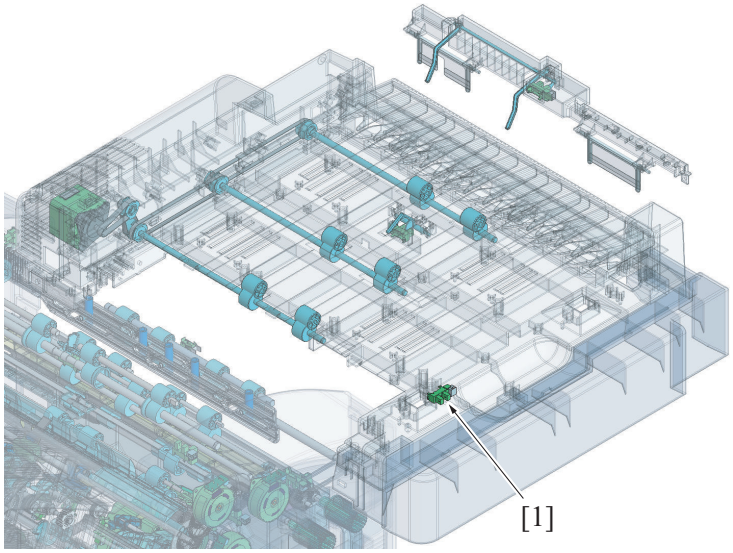


| | | | |
|---|---|---|---|
| [1] | RU cover open/close detection sensor (PS3) | - | - |

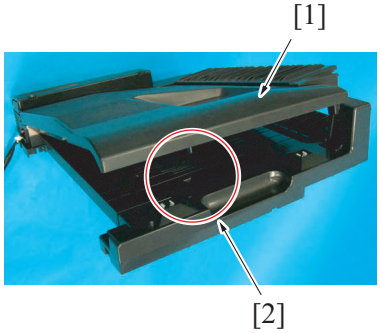


| | | | |
|---|---|---|---|
| [1] | RU door | [2] | RU cover open/close detection sensor (PS3) |

### 5.3.3 3rd exit tray full detection mechanism

- When a predetermined quantity of paper is discharged to the 3rd exit tray, the 3rd exit tray full sensor actuator will be pushed up by the discharged paper. When the actuator is pushed up to the predetermined position, the 3rd exit tray full sensor will be blocked by the actuator to detect the exit tray full.
- The 3rd tray full is detected, the warning screen will display on the control panel. All setting operations and jobs will be disabled when the warning message is displayed on the screen. The warning screen will be released by removing the paper on the 3rd exit tray.

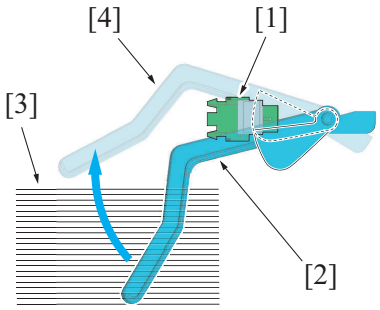


| | | | |
|---|---|---|---|
| [1] | 3rd exit tray full sensor (PS1) | [2] | 3rd exit tray full sensor actuator (no paper) |
| [3] | Paper | [4] | 3rd exit tray full sensor actuator (exit tray full) |

# 6. PUNCH SECTION (PK-520)

## 6.1 Configuration

- The punch function can be added to the finishing mode by installing the optional punch kit PK-520 to the finisher FS-534.
- At the punch section, the holes are punched at the trailing edge of the paper, transported from the RU section (horizontal transport section) when the paper is fed into the FNS section (finisher section). Holes are punched sheet by sheet.
- The punch kits for North America, Europe, and other market areas have the configuration to switch the number of punch holes.
  **NOTE**
  - **2-hole punch kits and 4-hole punch kits do not have the function to switch the number of punch holes.**
  - **"Finishing" cannot be selected using a different punch kit. (Example: The three-hole punch mode cannot be selected when the 4-hole punch kit is installed.)**

- Punch dust generated by punching is received in the punch dust box.
- The paper with punched holes is transported to the transport section from the punch section.
- When the punch holes are not specified at "Finishing", the paper is transported to the transport section from the FNS paper feed section without punching holes.

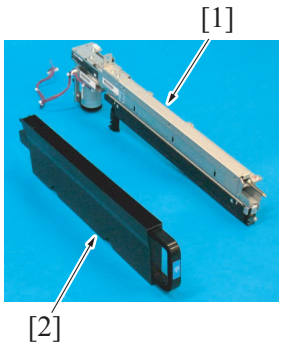


| | | | |
|---|---|---|---|
| [1] | Punch unit | [2] | Punch dust box |

Front view

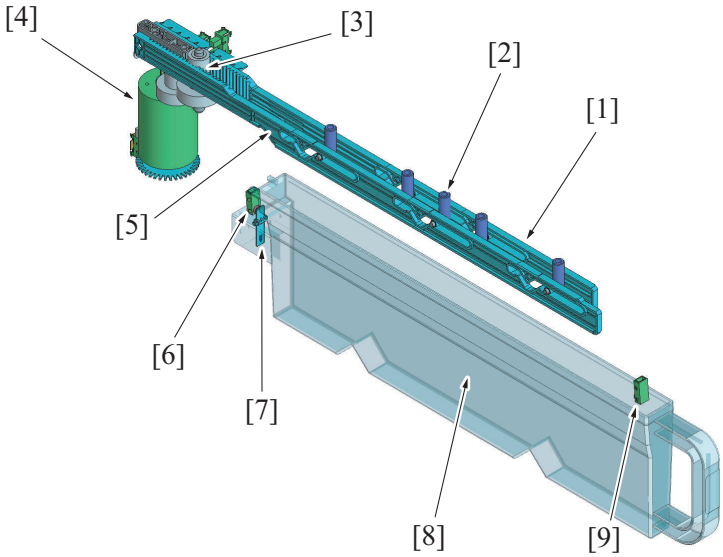


Rear view

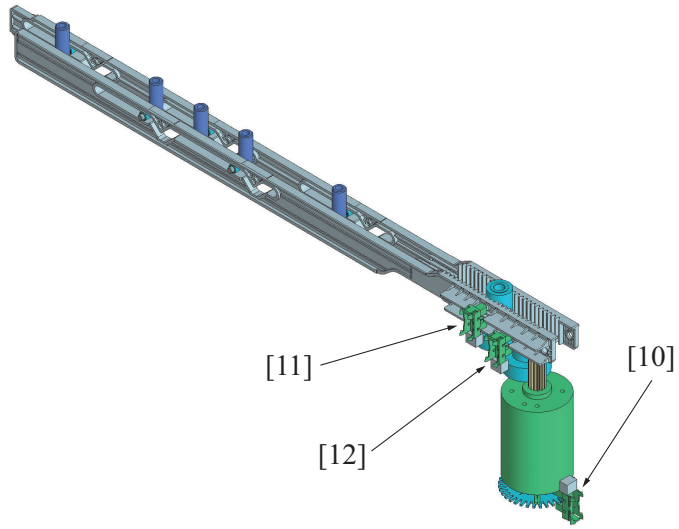


| | | | |
|---|---|---|---|
| [1] | Puncher frame 1 *1 | [2] | Puncher *2 |

| | | | |
|---|---|---|---|
| [3] | Puncher drive gear | [4] | Punch drive motor (M1) |
| [5] | Puncher frame 2 *3 | [6] | Punch dust full sensor/in (PS5) |
| [7] | Punch dust full sensor actuator | [8] | Punch dust box |
| [9] | Punch dust full sensor/out (PS4) | [10] | Punch motor sensor (PS3) |
| [11] | Punch home sensor (PS1) | [12] | Punch position sensor (PS2) |

- *1: The shape of the puncher frame is varied depending on the type of punch kit.
- *2: The number of the puncher is varied depending on the type of punch kit.
- *3: The shape of the puncher frame is varied depending on the type of punch kit. 2 holes punch kit does not have the puncher frame 2.

### 6.1.1 Punch kit type

2 holes/3 holes kit (Selectable the hole number)

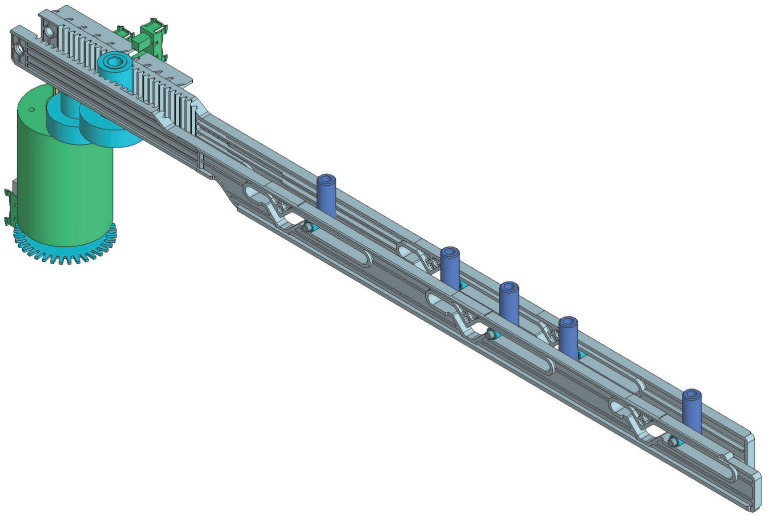

- Attachable marketing area: Europe, US, Others 1-5

2 holes/4 holes kit (Selectable the hole number)

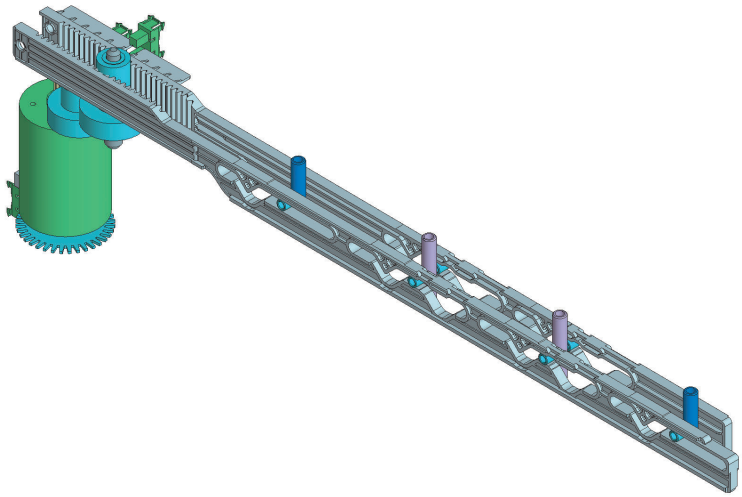

- Attachable marketing area: Europe, US, Others 1-5

2 holes punch kit

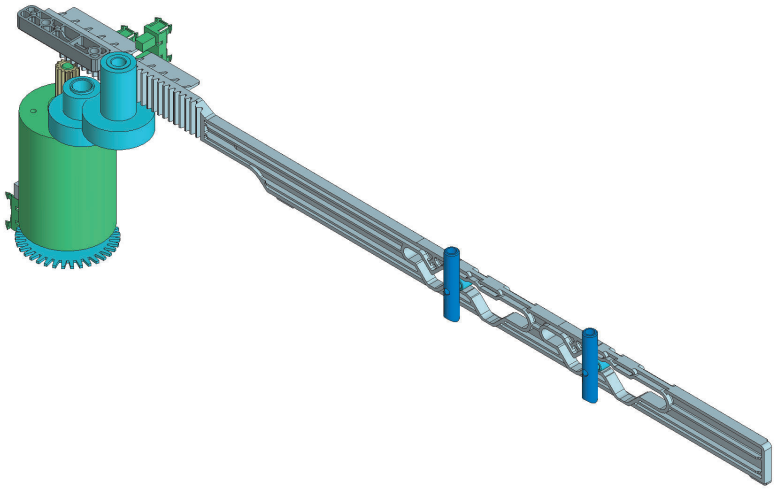

- Attachable marketing area: Japan

4 holes punch kit

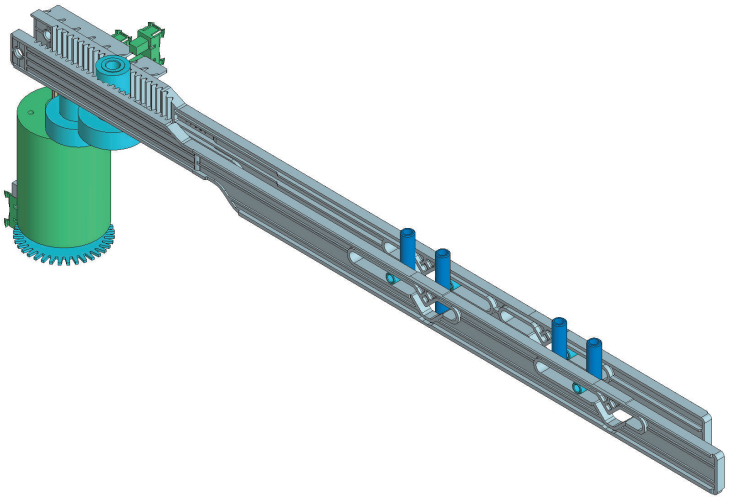

- Attachable marketing area: Europe

## 6.2 Drive

- The drive source for the punch section is the punch drive motor. The puncher frame is driven in forward/reverse direction by rotating the punch drive motor in forward/reverse direction.
- When the puncher frame moves in forward/reverse direction, the puncher moves up/down by the cam of the puncher frame to punch the holes on the paper.
- Puncher frame 1 and the puncher frame 2 have cams with different shapes. It enables the puncher to move up/down at different timings.
- When the puncher drive gear rotates clockwise, the puncher frame 1 shifts to the front side, and the puncher frame 2 shifts to the back side. When the puncher drive gear rotates counter-clockwise, the puncher frame 1 shifts to the back side, and the puncher frame 2 shifts to the front side. The puncher connected to the puncher frame then moves up/down with the cam. Switching the forward/reverse direction of the punch drive motor, switches the number of punch holes.

Front view

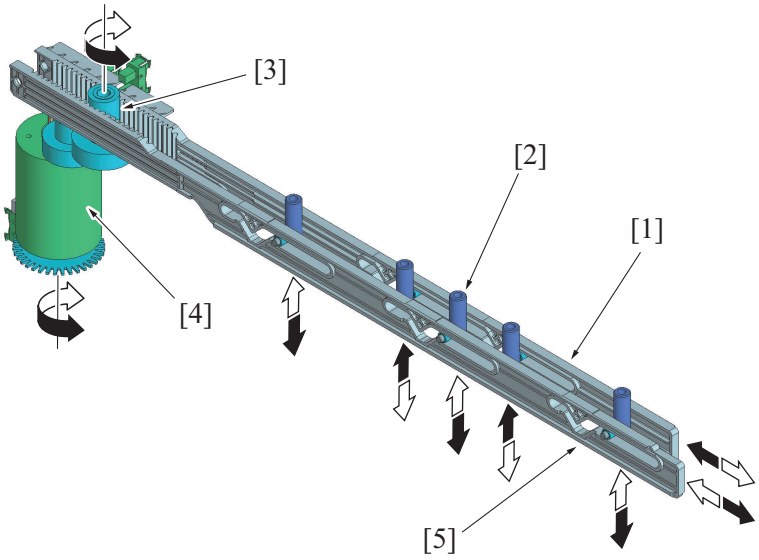


| | | | |
|---|---|---|---|
| [1] | Puncher frame 1 *1 | [2] | Puncher *2 |
| [3] | Puncher drive gear | [4] | Punch drive motor (M1) |
| [5] | Puncher frame 2 *1 | - | - |

- *1: The shape of the puncher frame is varied depending on the type of punch kit.
- *2: The number of the puncher is varied depending on the type of punch kit.

**NOTE**

- **The illustration explains with an example for "2-holes/3-holes kit".**
- **With "2 holes/3 holes kit", the 2-holes puncher moves down when the puncher drive gear rotates clockwise. When the puncher drive gear rotates counter-clockwise, the 3-holes puncher moves down. The number of the punch holes is switched by the same configuration for "2-holes/4-holes kits".**
- **The "2-holes kit" and the "4-holes kit" do not have the punch hole switching function.**

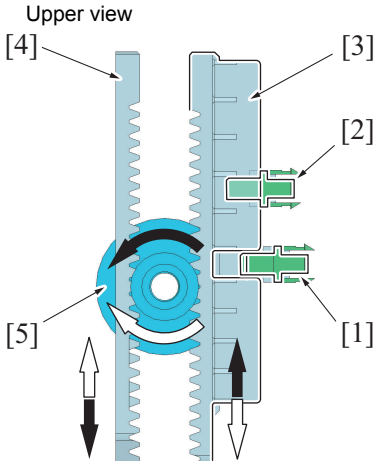


| | | | |
|---|---|---|---|
| [1] | Punch home sensor (PS1) | [2] | Punch position sensor (PS2) |
| [3] | Puncher frame 1 | [4] | Puncher frame 2 |
| [5] | Puncher drive gear | - | - |

## 6.3 Operation

### 6.3.1 Skew correction mechanism

- When punching holes, punch resist loop is formed upstream of FNS section transport roller/1 to remove the skew of the paper.

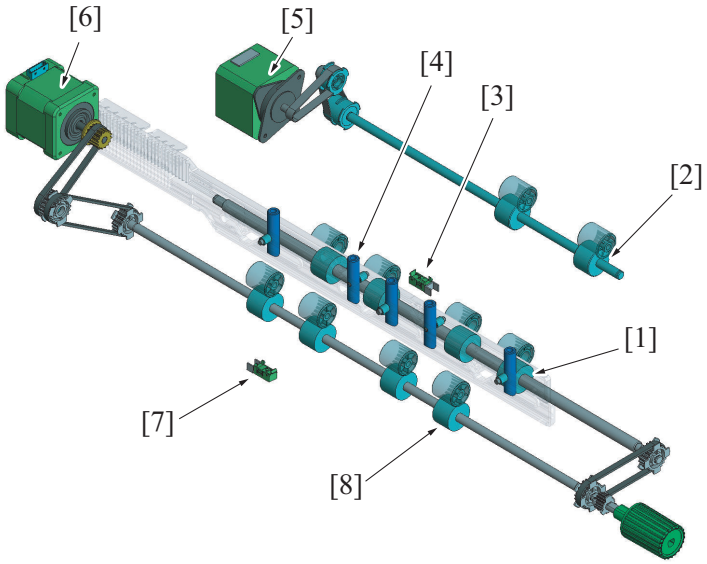


| | | | |
|---|---|---|---|
| [1] | FNS section paper feed roller | [2] | RU section horizontal transport roller/3 |
| [3] | FNS entrance sensor (PS4) | [4] | Puncher |
| [5] | RU transport motor (M1) | [6] | FNS entry transport motor (M2) |
| [7] | Main tray exit sensor (PS16) | [8] | FNS section transport roller |

#### (1) Skew correction process

1. The paper is transported to the FNS section (finisher section) by the RU transport motor driving the RU section horizontal transport roller/3.
2. When the leading edge of the paper reaches to the FNS section paper feed roller, it is detected by the FNS entrance sensor.
3. The paper is pressed to the FNS section paper feed roller which is at a halt to form the loop at the leading edge of the paper to remove the skew of the paper.
4. The FNS entry transport motor is turned ON when the specified period of time has passed after the leading edge of the paper turns the FNS entrance sensor ON, to start rotating the FNS section paper feed roller and the FNS section transport roller.
5. The paper which skew is removed is transported to the punch section by the FNS section paper feed roller, and then stop the specified position.
6. The holes are punched by the puncher.
7. The punched paper is transported to inside the transport section by the FNS section transport roller.

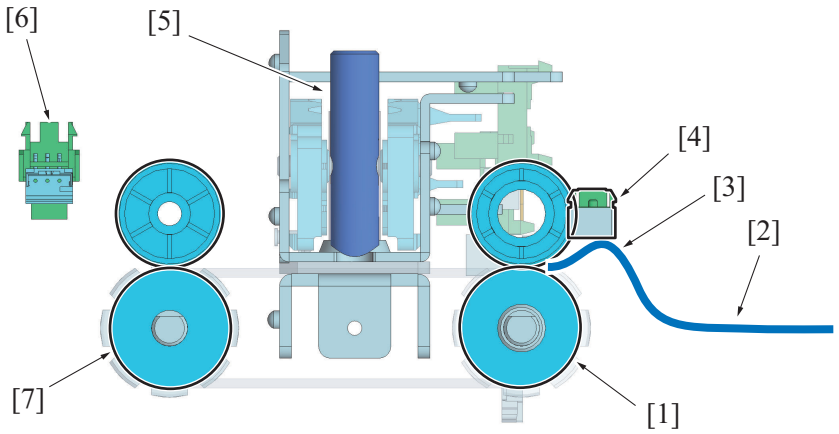


| | | | |
|---|---|---|---|
| [1] | FNS section paper feed roller | [2] | Paper |
| [3] | The resist loop is created at the leading edge of the paper | [4] | FNS entrance sensor (PS4) |
| [5] | Puncher | [6] | Main tray exit sensor (PS16) |
| [7] | FNS section transport roller | - | - |

### (2) Punch Regist Loop Size Adjustment function

- Then the punch holes tilt, punch resist value for the Service Mode can be adjusted to adjust the punch holes.
- Punch resist value (resist loop value) changes by changing the timing the FNS section paper feed roller starts rotating. Tilt of the punch holes can be adjusted by removing the skew of the paper at the resist loop.
- For details of the adjustment procedures, see "Service Mode/Finisher/FS-FN adjustment/Punch Registration Loop Adj.".

#### (a) Setting range

- -4.0 to +4.0

## 6.3.2 Puncher up/down status detection configuration

- When the puncher drive gear rotates clockwise, the puncher frame 1 shifts to the front side, and the puncher frame 2 shifts to the back side. When the puncher drive gear rotates counter-clockwise, the puncher frame 1 shifts to the back side, and the puncher frame 2 shifts to the front side. The puncher connected to the puncher frame then moves up/down with the cam. Switching the forward/reverse direction of the punch drive motor, switches the number of punch holes.
- Puncher frame 1 has two light-blocking plates to detect the position of the puncher frame.
- The punch drive motor has a round light-blocking plate and the puncher motor sensor on the same shaft to detect the rotation value (pulse) of the punch drive motor.
- The Up/down status of the puncher is detected by the coordination input from the puncher position sensor, punch home sensor, and the punch motor sensor.

Rear view

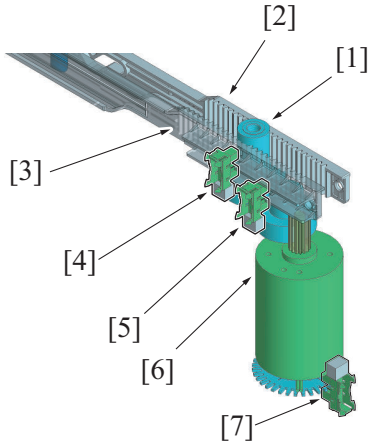


| | | | |
|---|---|---|---|
| [1] | Puncher drive gear | [2] | Puncher frame 2 |
| [3] | Puncher frame 1 | [4] | Punch home sensor (PS1) |
| [5] | Punch position sensor (PS2) | [6] | Punch drive motor (M1) |
| [7] | Punch motor sensor (PS3) | - | - |

Upper view

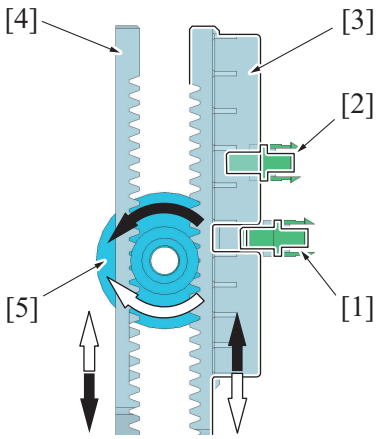


| | | | |
|---|---|---|---|
| [1] | Punch home sensor (PS1) | [2] | Punch position sensor (PS2) |
| [3] | Puncher frame 1 | [4] | Puncher frame 2 |
| [5] | Puncher drive gear | - | - |

Front view

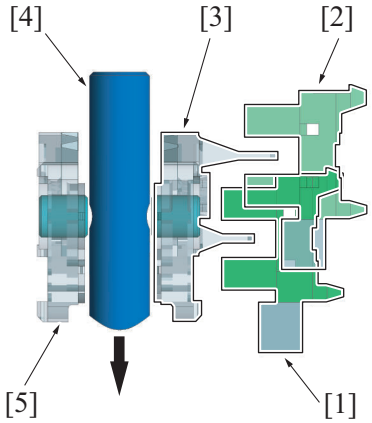


| | | | |
|---|---|---|---|
| [1] | Punch position sensor (PS2) | [2] | Punch home sensor (PS1) |
| [3] | Puncher frame 1 | [4] | Puncher |
| [5] | Puncher frame 2 | - | - |

### 6.3.3 Punch operation noise suppression

#### (1) Sound-absorbing material for punching operation

- A sound-absorbing material is installed inside the finisher upper door.
- It absorbs noises that are generated during punch operation with the punch unit to suppress it from being leaked out of the machine.

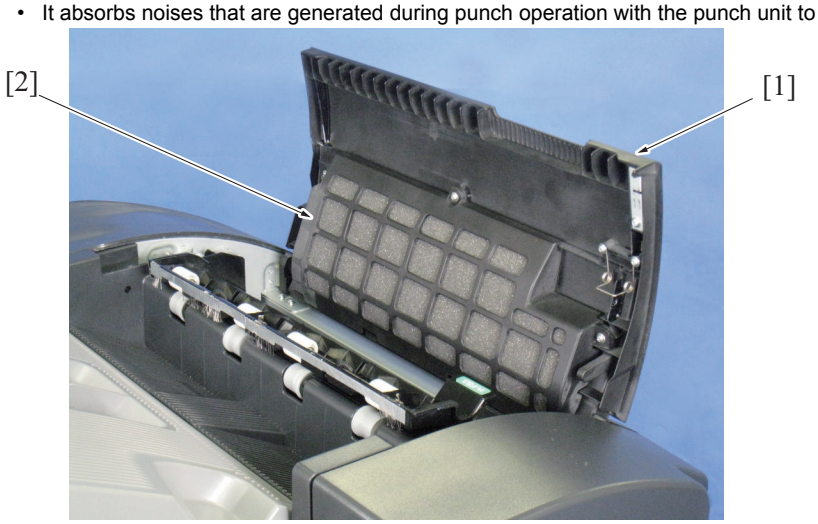


| | | | |
|---|---|---|---|
| [1] | Upper door | [2] | Sound-absorbing material* |

- *: The sound-absorbing material does not require to be replaced on a regular basis.

#### (2) Punching operation noise suppression control

- The punching force of the punch motor is controlled in accordance with the thickness of the paper (paper weight).
- It suppresses the operating noise generating from the punch unit at punching.

- Thick paper is punched at 100 % force. Apply 60 % force to punch paper other than thick paper. It minimizes the noise that is generated when the holes are punched.

**NOTE**

- **The punch operation noise suppression control can be disabled when the Engine FW DipSW switch No. 17 is turned to Off. For details on setting, see I.7.3.9 Engine FW DipSW.**

### 6.3.4 Punch dust box full detection mechanism

- Punch dust created by punching holes on the paper, are collected in the punch dust box.
- The punch unit has a sensor to detect a punch dust full condition at the front side (emission) and the back side (receiving). The sensor detects the status of the punch dust.
- When the punch dust is accumulated inside the punch dust box, the sensor light on punch dust full sensor/out is interfered by the punch dust. The punch dust box is determined to be full when the sensor light is blocked. A message is displayed on the control panel to indicate a "punch dust full" condition when a punch dust box full is detected.

**NOTE**

- **When the punch dust box is removed, the sensor light on punch dust full sensor/out is blocked by the actuator on the punch unit. When the front door is closed is point and the punch job is set a message is displayed on the control panel to indicate a "Punch dust full" condition.**
- **When the empty punch dust box is installed, the sensor light blocked by the actuator, reaches punch dust full sensor/in, and the "punch dust full" message on the control panel disappears.**

Front view

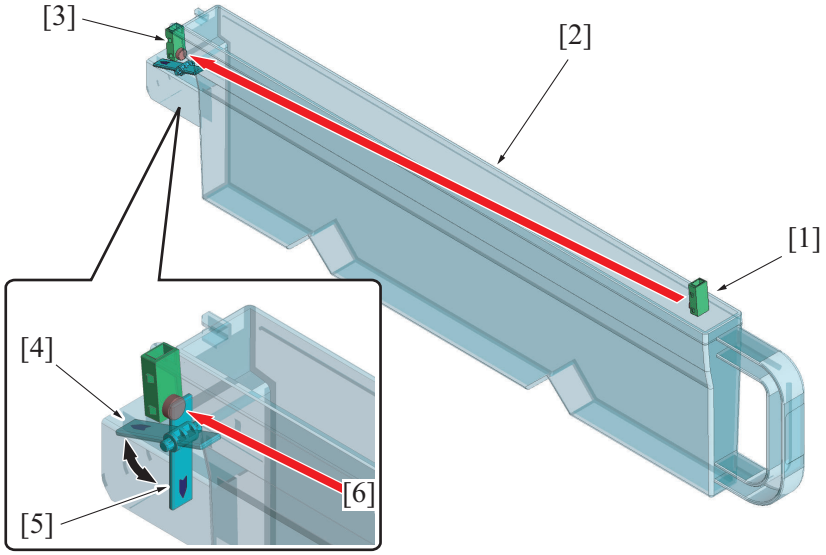


| | | | |
|---|---|---|---|
| [1] | Punch dust full sensor/out (PS4) | [2] | Punch dust box |
| [3] | Punch dust full sensor/in (PS5) | [4] | Actuator (Punch dust box is installed position) |
| [5] | Actuator (Punch dust box is not installed position) | [6] | Sensor light |

Side view

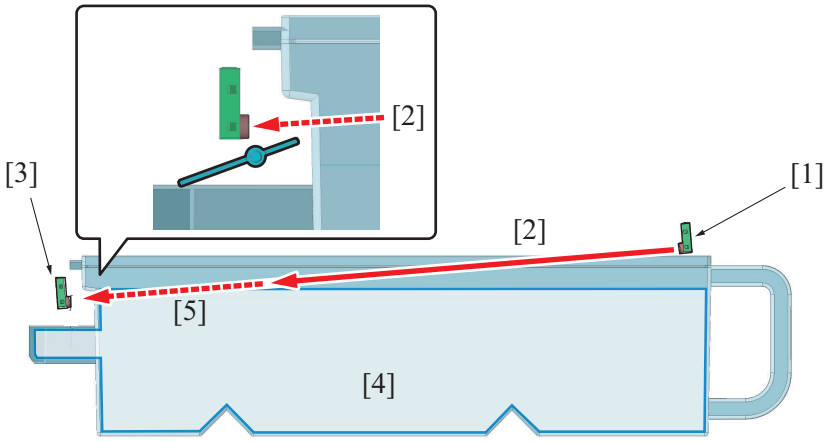


| | | | |
|---|---|---|---|
| [1] | Punch dust full sensor/out (PS4) | [2] | Sensor light |
| [3] | Punch dust full sensor/in (PS5) | [4] | Punch dust (full detection level) |
| [5] | Punch dust blocked the sensor light | - | - |

#### (1) Unit change function

- The screen to be displayed when a punch dust full is detected can be enabled or disabled in the “Unit Change” in the Service Mode.

**NOTE**

- **The Service Mode screen display, details, menus, and default settings may change when the FS-534 is installed to the MFP.**
- **For details of the Service Mode, see “I.5.16.5 Unit Change”.**

# 7. TRANSPORT SECTION

## 7.1 Configuration

### 7.1.1 Paper path

- The transport section transports the paper from the RU section (horizontal transport section) to the three paper paths within the FNS section (finisher section).

#### (1) Paper path to the sub tray

- The paper path switching gate, moves the paper transported from the RU section to the sub tray paper path to discharge the paper to the sub tray.

**NOTE**

- **The paper is directly discharged to the sub tray without passing through the alignment and exit sections. If "Sub Tray" is selected as exit tray for a print job, the offset option (sort/group/staple) is unavailable.**

#### (2) Paper path to the main tray

- The paper path switching gate moves the paper transported from the RU section to the main tray paper path. The paper passes through the alignment and exit sections, and then moves to the main tray.

#### (3) Paper path to the saddle section

**NOTE**

- **FS-534SD only**
- The paper path switching gate moves the paper transported from the RU section to the main tray paper path. Switchback of the paper is done at the transport section and then the paper passes through the vertical transport section, and moves to the saddle section.

### 7.1.2 Paper feed section - sub tray section

Front perspective view

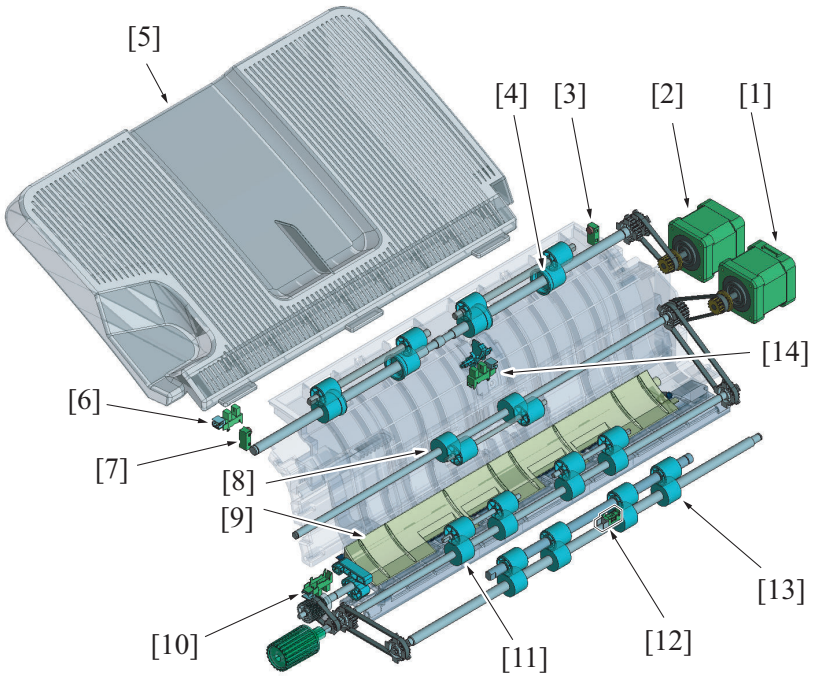


| | | | |
|---|---|---|---|
| [1] | FNS entry transport motor (M2) | [2] | FNS discharge motor (M3) |
| [3] | Sub tray full detection sensor/out (PS9) | [4] | Sub tray section exit roller |
| [5] | Sub tray | [6] | Upper cover open/close detection sensor (PS32) |
| [7] | Sub tray full detection sensor/in (PS10) | [8] | Sub tray section vertical transport roller |
| [9] | Paper path switching gate | [10] | Exchange folded paper output sensor (PS30) |
| [11] | FNS section transport roller | [12] | FNS entrance sensor (PS4) |
| [13] | FNS section paper feed roller | [14] | Sub tray exit sensor (PS8) |

Front view

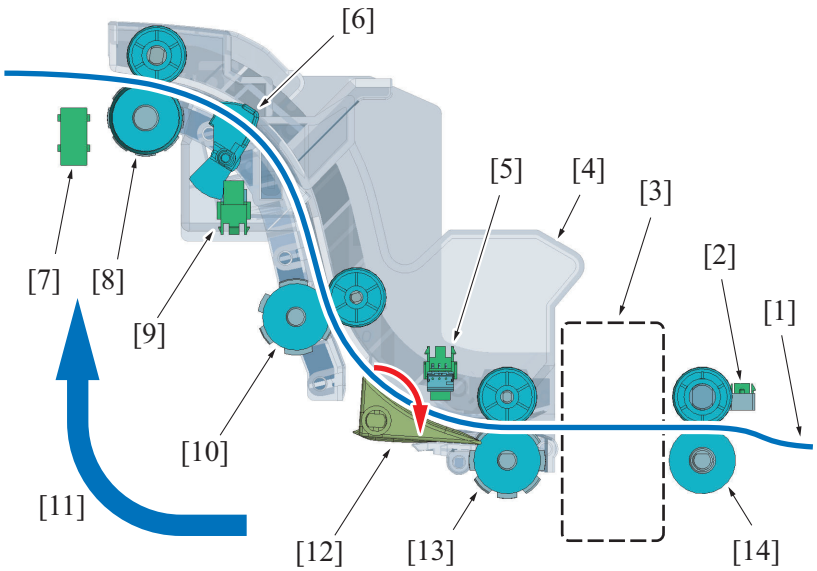


| | | | |
|---|---|---|---|
| [1] | Paper path | [2] | FNS entrance sensor (PS4) |
| [3] | Punch Kit PK-520 | [4] | Jam removal cover (sub tray transport route) |
| [5] | Exchange folded paper output sensor (PS30) | [6] | Sub tray exit sensor actuator |
| [7] | Sub tray full detection sensor | [8] | Sub tray section exit roller |
| [9] | Sub tray exit sensor (PS8) | [10] | Sub tray section vertical transport roller |
| [11] | Paper feeding direction | [12] | Paper path switching gate (lower position) |
| [13] | FNS section transport roller | [14] | FNS section paper feed roller |

Exterior view

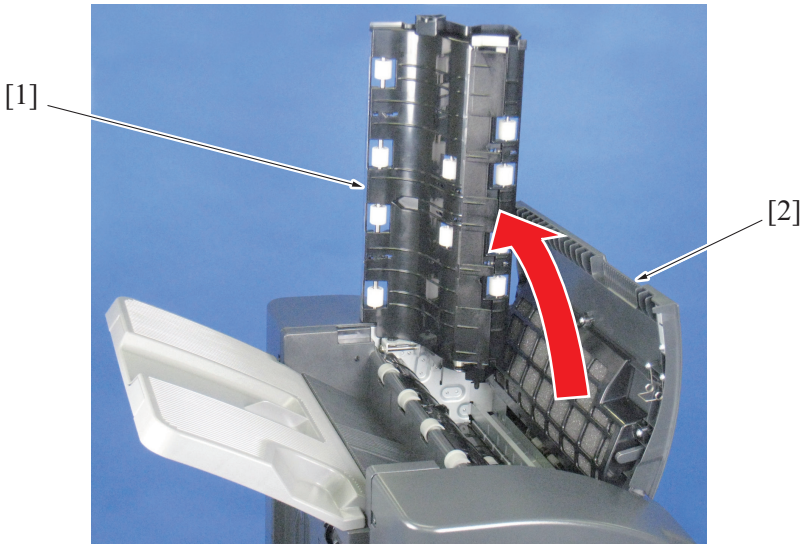


| | | | |
|---|---|---|---|
| [1] | Jam removal cover | [2] | Upper door |

### 7.1.3 Paper feed section - main tray section

Front perspective view

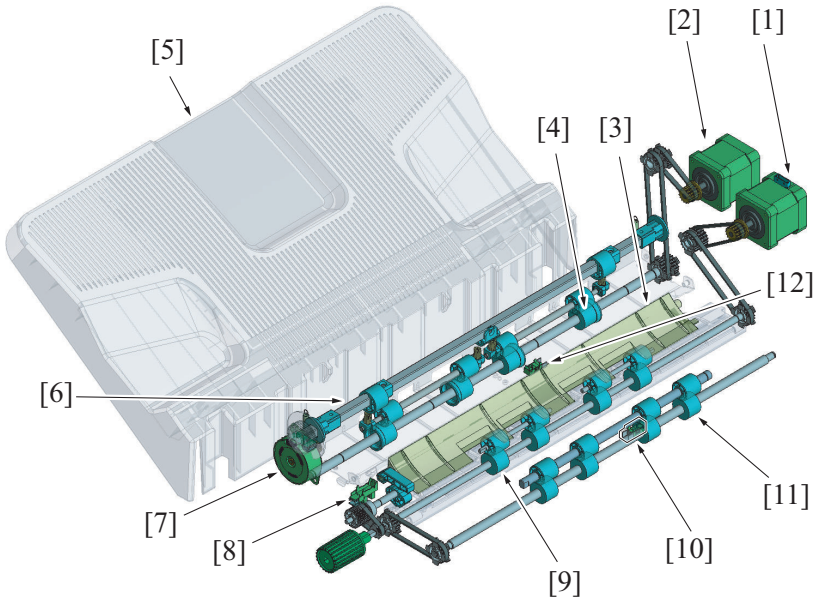


| | | | |
|---|---|---|---|
| [1] | FNS entry transport motor (M2) | [2] | FNS discharge motor (M3) |
| [3] | Paper path switching gate | [4] | Receiving roller |
| [5] | Main tray | [6] | Receiving roller pressure cam |
| [7] | Receiving roller retraction motor (M4) | [8] | Exchange folded paper output sensor (PS30) |
| [9] | FNS section transport roller | [10] | FNS entrance sensor (PS4) |
| [11] | FNS section paper feed roller | [12] | Main tray exit sensor (PS16) |

Front view

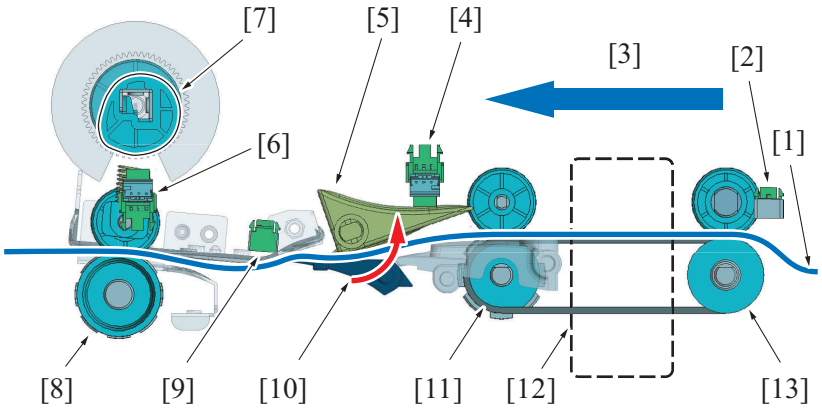


| | | | |
|---|---|---|---|
| [1] | Paper path | [2] | FNS entrance sensor (PS4) |
| [3] | Paper feeding direction | [4] | Exchange folded paper output sensor (PS30) |
| [5] | Paper path switching gate (upper position) | [6] | Receiving roller retraction sensor (PS11) |
| [7] | Receiving roller pressure cam | [8] | Receiving roller |
| [9] | Main tray exit sensor (PS16) | [10] | Movable paper guide |
| [11] | FNS section transport roller | [12] | Punch Kit PK-520 |
| [13] | FNS section paper feed roller | - | - |

### 7.1.4 Main tray section - saddle section

Front perspective view

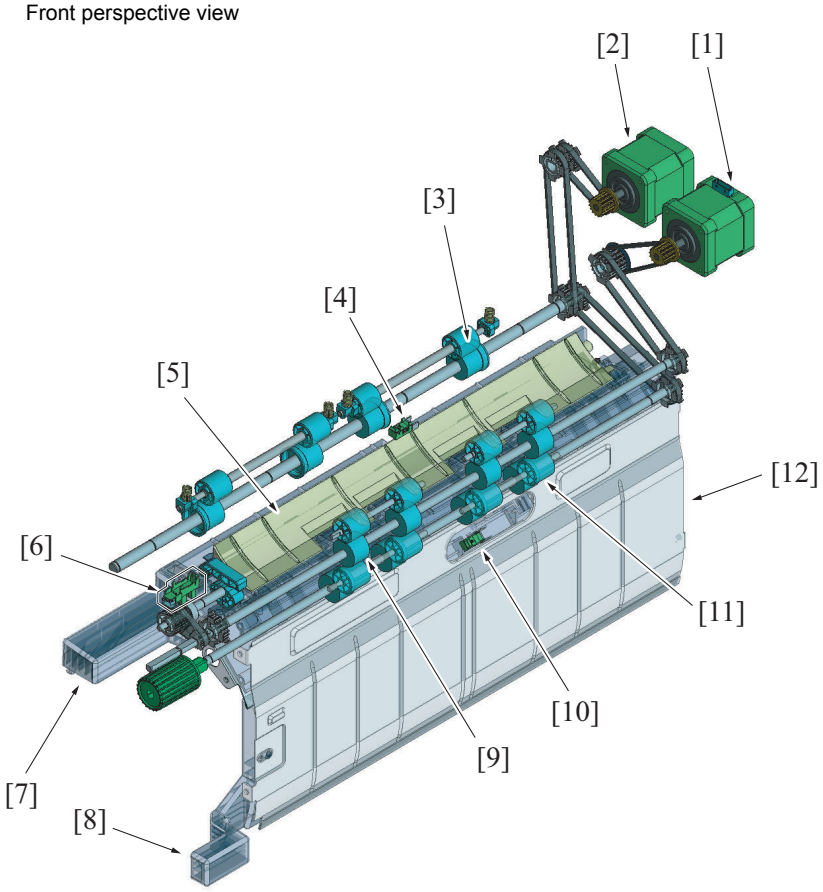


| | | | |
|---|---|---|---|
| [1] | FNS entry transport motor (M2) | [2] | FNS discharge motor (M3) |
| [3] | Receiving roller | [4] | Main tray exit sensor (PS16) |
| [5] | Paper path switching gate | [6] | Exchange folded paper output sensor (PS30) |
| [7] | Jam removal cover (horizontal transport section) | [8] | Jam removal cover (vertical transport section)*1 |
| [9] | FNS section transport roller | [10] | Saddle exit sensor (PS5) |
| [11] | FNS section exit roller | [12] | FNS section vertical transport guide |

- *1: FS-534SD only

Front view

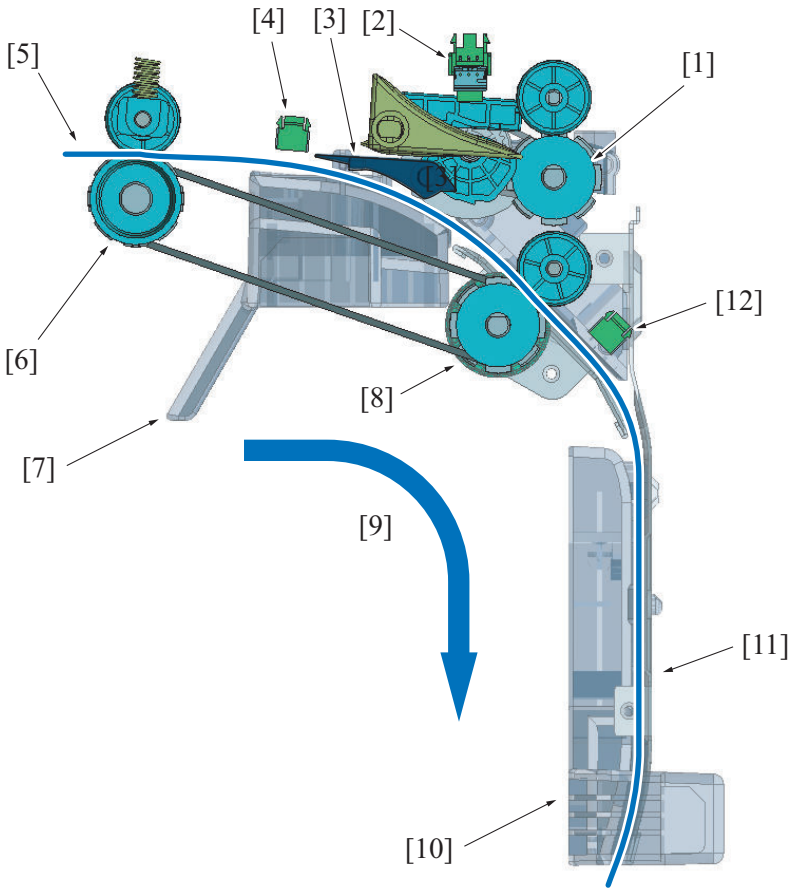


| | | | |
|---|---|---|---|
| [1] | FNS section transport roller | [2] | Exchange folded paper output sensor (PS30) |
| [3] | Movable paper guide | [4] | Main tray exit sensor (PS16) |
| [5] | Paper path | [6] | Receiving roller |
| [7] | Jam removal cover (horizontal transport section) | [8] | FNS section exit roller |
| [9] | Paper feeding direction | [10] | Jam removal cover (vertical transport section)*1 |
| [11] | FNS section vertical transport guide | [12] | Saddle exit sensor (PS5) |

- *1: FS-534SD only

Exterior view

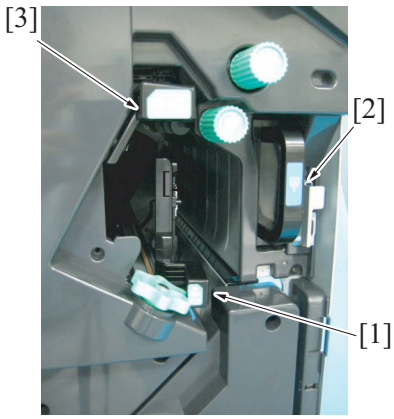


| | | | |
|---|---|---|---|
| [1] | Jam removal cover (vertical transport section) (Open position) | [2] | Punch dust box *1 |
| [3] | Jam removal cover (horizontal transport section) (Close position) *2 | - | - |

- *1: Only when the PK-520 is added to the finisher.
- *2: FS-534SD only

## 7.2 Drive

The driving source of the FNS section is the FNS entry transport motor, FNS discharge motor, and receiving roller retraction motor, and the following parts are driven.

| Driving source | Driving parts | Functions |
|---|---|---|
| FNS entry transport motor (M2) | FNS section paper feed roller | Feeds paper to the FNS section |
| | FNS section vertical transport roller | Transports paper to each paper path in the FNS section. |
| | Paper path switching gate | Switches paper path by the paper path switching gate up/down movement triggered by the cam. |
| | Sub tray section vertical transport roller | Transports paper to the sub tray section exit roller. (sub tray paper path) |
| FNS discharge motor (M3) | Sub tray section exit roller | Transports paper to the sub tray. (sub tray paper path) |
| | Receiving roller | • Normal rotation: Transports paper to alignment section. (main tray paper path)<br>• Reverse rotation: Transports paper to the saddle section. (saddle section paper path) |
| | FNS section exit roller | Transports paper from the alignment section to the saddle section via the switchback. (saddle section paper path) |
| Receiving roller retraction motor (M4) | Receiving roller pressure roll | The receiving roller pressure roll is moved up/down by the cam. (main tray paper path)<br>• When the pressure roll is lowered, the paper on the receiving roller is pressed against the receiving roller. When the receiving roller rotates in the normal direction, the paper is transported to the alignment section. When the receiving roller rotates reversely, the paper is switched back through the transport path to the saddle section.<br>• When the pressure roll moves up, the paper on the receiving roller is released. The paper is not transported and brought into a standby state. |

### 7.2.1 FNS entry transport motor

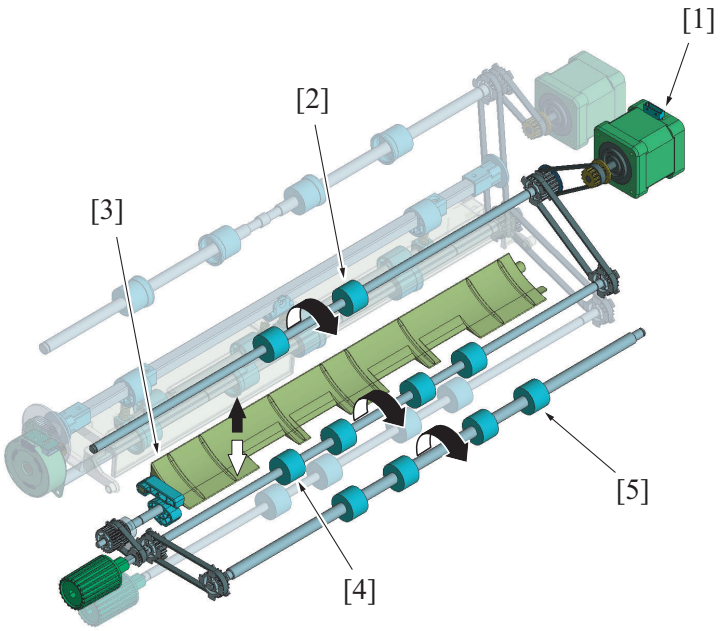


| | | | |
|---|---|---|---|
| [1] | FNS entry transport motor (M2) | [2] | Sub tray section vertical transport roller |
| [3] | Paper path switching gate | [4] | FNS section transport roller |
| [5] | FNS section paper feed roller | - | - |

### 7.2.2 FNS discharge motor

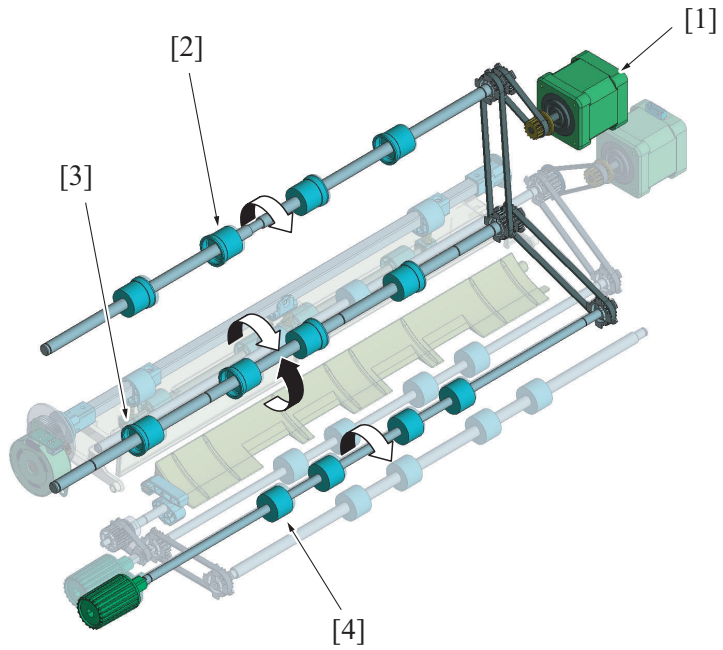


| | | | |
|---|---|---|---|
| [1] | FNS discharge motor (M3) | [2] | Sub tray section exit roller |
| [3] | Receiving roller | [4] | FNS section exit roller |

### 7.2.3 Receiving roller retraction motor

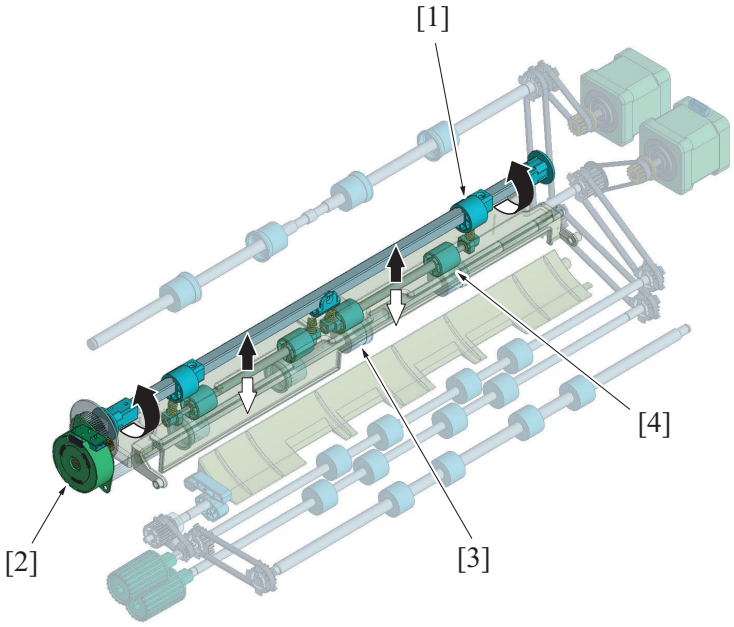


| | | | |
|---|---|---|---|
| [1] | Receiving roller pressure cam | [2] | Receiving roller retraction motor (M4) |
| [3] | Receiving roller * | [4] | Receiving roller pressure roll |

- *: The driving source of the receiving roller is the FNS discharge motor. The driving source of the receiving roller pressure roll is the receiving roller retraction motor.

## 7.3 Operation

### 7.3.1 Paper path switching mechanism

- Paper path is switched by the up/down operations of the paper path switching gate to transport paper to each tray or the saddle section.
- The up/down operations of the paper path switching gate is driven by the FNS entry transport motor.
- The position of the paper path switching gate is detected by the exchange folded paper output sensor.

Front perspective view

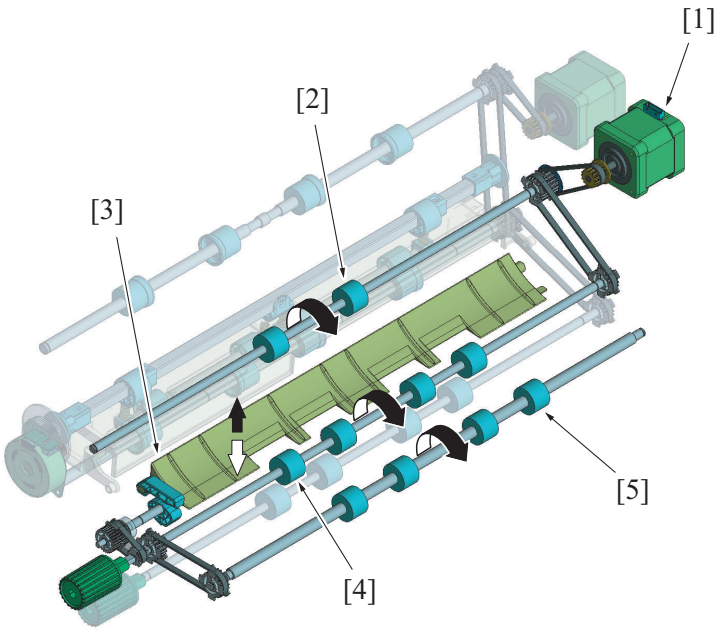


| | | | |
|---|---|---|---|
| [1] | FNS entry transport motor (M2) | [2] | Sub tray section vertical transport roller |
| [3] | Paper path switching gate | [4] | FNS section transport roller |
| [5] | FNS section paper feed roller | - | - |

### (1) Gate lower position (paper path: sub tray)

- When the cam rotates, the paper path switching gate moves down to block the paper path to the main tray. The paper passes on the top of the paper path switching gate and is transported to the sub tray.
- When the detection plate located on the shaft, on which the cam is located, rotates, the exchange folded paper output sensor is unblocked. This causes machine to determine that the gate is at the lower position.
- When the paper is transported through the sub tray paper path, the sub tray exit sensor located downstream of the paper path switching gate detects the paper conveyance.

Front view: Illustration on the relationship between the cam and paper path switching gate

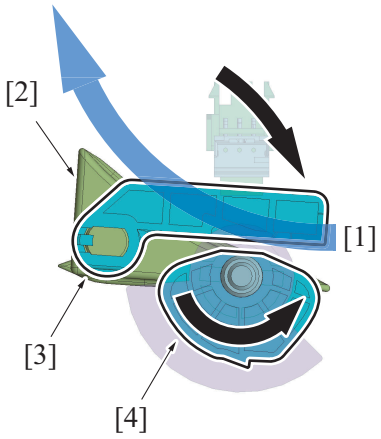


| | | | |
|---|---|---|---|
| [1] | Paper | [2] | Paper path switching gate (lower position) |
| [3] | Lever | [4] | Cam |

Front view: Illustration on the relationship between the detection plate and the exchange folded paper output sensor

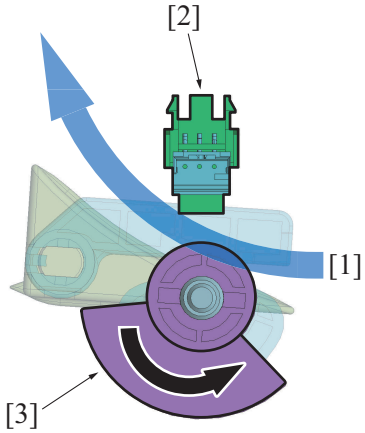

| | | | |
|---|---|---|---|
| [1] | Paper | [2] | Exchange folded paper output sensor (PS30) |
| [3] | Detection plate | - | - |

### (2) Gate upper position (paper path: main tray)

- When the cam rotates, the paper path switching gate moves up to block the paper path to the sub tray. The paper passes on the bottom of the paper path switching gate and is transported to the main tray.
- When the detection plate located on the shaft, on which the cam is located, rotates, the exchange folded paper output sensor is blocked. This causes machine to determine that the gate is at the upper position.
- When the paper is transported through the main tray paper path, the main tray exit sensor located downstream of the paper path switching gate detects the paper conveyance.

Front view: Illustration on the relationship between the cam and paper path switching gate

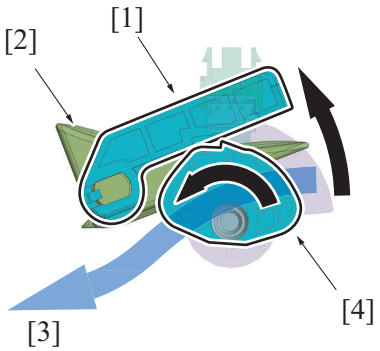


| | | | |
|---|---|---|---|
| [1] | Lever | [2] | Paper path switching gate (upper position) |
| [3] | Paper | [4] | Cam |

Front view: Illustration on the relationship between the detection plate and the exchange folded paper output sensor

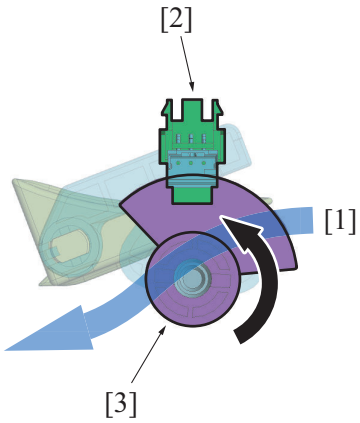


| | | | |
|---|---|---|---|
| [1] | Paper | [2] | Exchange folded paper output sensor (PS30) |
| [3] | Detection plate | - | - |

## 7.3.2 Sub tray exit mechanism

- Paper transported from the RU section is discharged to the sub tray by the sub tray section exit roller, via the FNS section paper feed roller, FNS section transport roller, and sub tray section vertical transport roller.
- To transport paper to the sub tray, the paper path switching gate also operates.
- The sub tray section exit roller is driven by the FNS discharge motor.

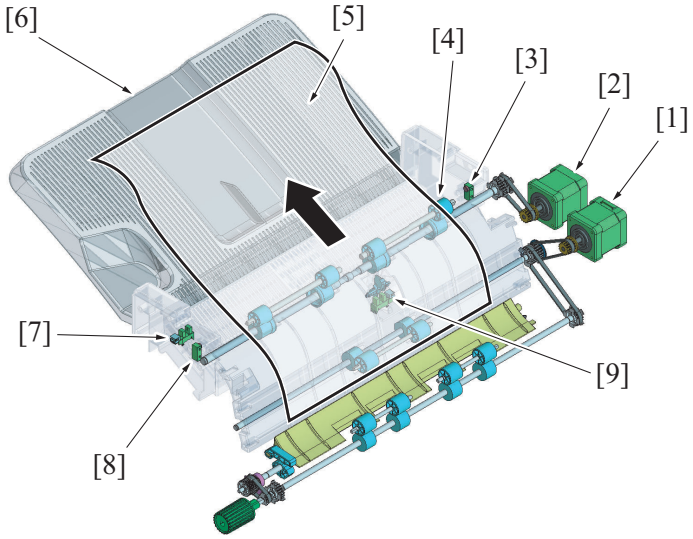

| | | | |
|---|---|---|---|
| [1] | FNS entry transport motor (M2) | [2] | FNS discharge motor (M3) |
| [3] | Sub tray full detection sensor/out (PS9) | [4] | Sub tray section exit roller |
| [5] | Paper | [6] | Sub tray |
| [7] | Upper cover open/close detection sensor (PS32) | [8] | Sub tray full detection sensor/in (PS10) |
| [9] | Sub tray exit sensor (PS8) | - | - |

### 7.3.3 Receiving roller section up/down function

- The up/down movement of the receiving roll, switches the timing of transporting the paper to the alignment section.
- The up/down operations of the receiving roll are driven by the receiving roller retraction motor.
- The position of the receiving roll is detected by the receiving roller retraction sensor.

Front perspective view

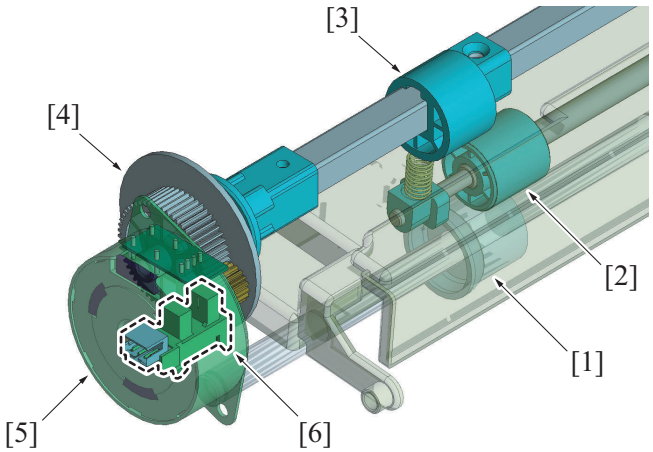


| | | | |
|---|---|---|---|
| [1] | Receiving roller | [2] | Receiving roll |
| [3] | Receiving roller pressure cam | [4] | Detection plate |
| [5] | Receiving roller retraction motor (M4) | [6] | Receiving roller retraction sensor (PS11) |

#### (1) Receiving roller: pressure position

- When the cam rotates, the receiving roll is lowered and pressed against the receiving roller. The paper is transported to the alignment section by the receiving roller.
- When the detection plate located on the shaft, on which the cam is located, rotates, the receiving roller retraction sensor is unblocked. This causes machine to determine that the receiving roll moves down (pressed).

Front view: Illustration on the relationship between the cam and roll

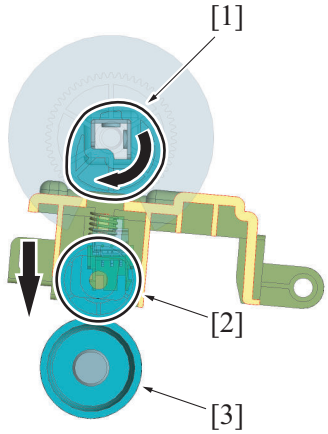


| | | | |
|---|---|---|---|
| [1] | Receiving roller pressure cam (pressure position) | [2] | Receiving roll (pressure position) |
| [3] | Receiving roller | - | - |

Front view: Illustration on the relationship between the detection plate and sensor

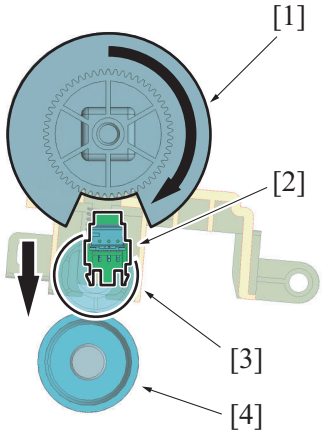


| | | | |
|---|---|---|---|
| [1] | Detection plate (pressure position) | [2] | Receiving roller retraction sensor (PS11) (unblocked) |
| [3] | Receiving roll (pressure position) | [4] | Receiving roller |

### (2) Receiving roller: release position

- The receiving roll is lifted by the cam and retracted from the receiving roller. The paper is brought to a standby state on the transport paper path.
- The detection plate located on the shaft, on which the cam is located, rotates and blocks the receiving roller retraction sensor. This causes machine to determine that the receiving roll moves up (retracted).

Front view: Illustration on the relationship between the cam and roll

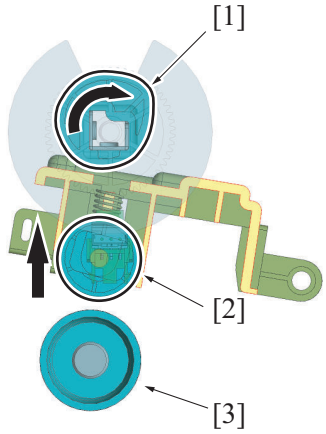


| | | | |
|---|---|---|---|
| [1] | Receiving roller pressure cam (release position) | [2] | Receiving roll (release position) |
| [3] | Receiving roller | - | - |

Front view: Illustration on the relationship between the detection plate and sensor

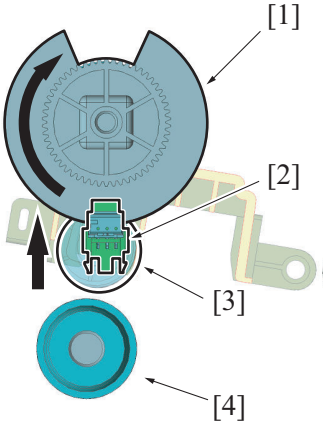


| | | | |
|---|---|---|---|
| [1] | Detection plate (release position) | [2] | Receiving roller retraction sensor (PS11) (blocked) |
| [3] | Receiving roll (release position) | [4] | Receiving roller |

## 7.3.4 Buffer control

- The receiving roller section up/down mechanism is provided to achieve high productivity, by eliminating the time loss for the next sheet of paper during the offset and staple operations.
- This allows handling a print job without reducing the paper transport speed even under the condition where the preceding sets of sheets are being aligned and stapled.

Front view

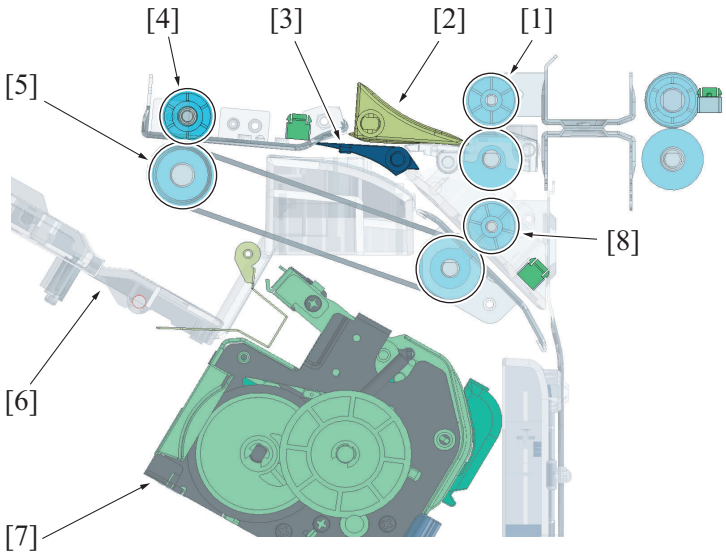


| | | | |
|---|---|---|---|
| [1] | FNS section transport roller | [2] | Paper path switching gate |
| [3] | Movable paper guide | [4] | Receiving roll |
| [5] | Receiving roller | [6] | Alignment tray |
| [7] | Staple unit | [8] | FNS section exit roller |

### (1) Paper transport operation

- The following explains the example of a print job where 5 sheets of paper is stapled together and 2 sets are output.

1. When the first set of paper passes, the receiving roll transports the paper to the alignment section without being lifted. The 5 sheets of the first set are aligned and then stapled.

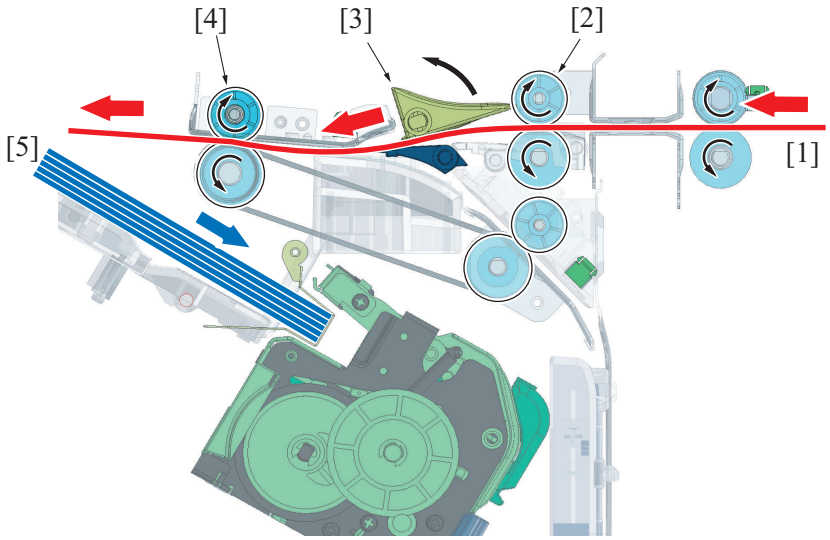


| | | | |
|---|---|---|---|
| [1] | First sheet in the second set | [2] | FNS section transport roller (forward rotation) |
| [3] | Paper path switching gate (upper position) | [4] | Receiving roll (pressure, forward rotation) |
| [5] | First set of sheets (transported to the alignment section) | - | - |

2. While the first set of sheets is being aligned, the first sheet in the second set causes the receiving roller to rotate in the reverse direction when the trailing edge of the sheet passes the movable paper guide. This causes the first sheet to move on the switchback until its trailing edge reaches the path to the saddle section. (This operation is performed to avoid blocking the paper path for the second sheet.)

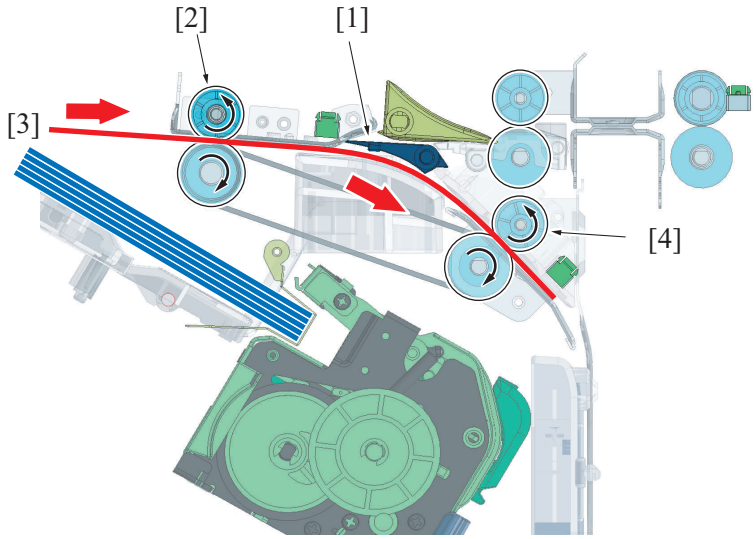


| | | | |
|---|---|---|---|
| [1] | Movable paper guide | [2] | Receiving roll (pressure, reverse rotation) |
| [3] | First sheet in the second set (switchback) | [4] | FNS section exit roller (reverse rotation) |

3. The receiving roll is lifted. The first sheet of paper that lost the force of being transported stays on the transport path.
4. While the first set is being stapled, the second sheet of the second set is transported and it is placed on the top of the first sheet of the second set.

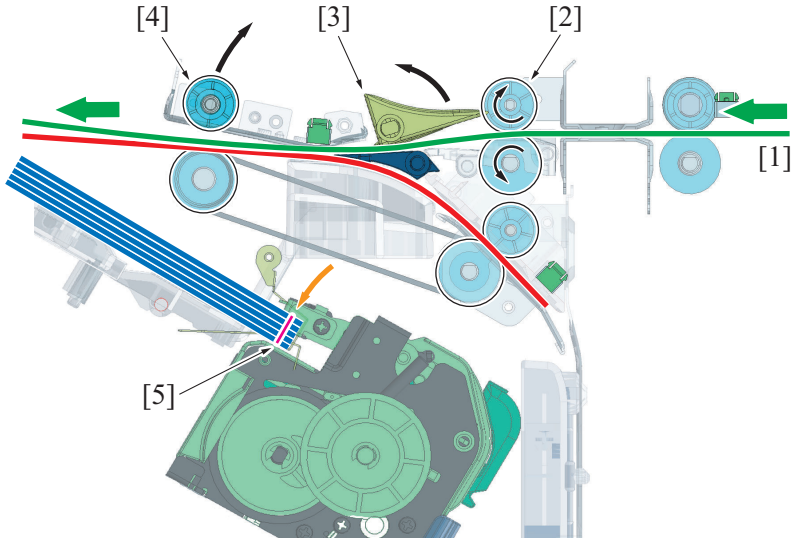


| | | | |
|---|---|---|---|
| [1] | Second sheet of the second set | [2] | FNS section transport roller (forward rotation) |
| [3] | Paper path switching gate (upper position) | [4] | Receiving roll (release, stop) |
| [5] | First sheet (staple) | - | - |

5. The receiving roll is lowered onto the 2nd set. Two sheets of the second set are discharged to the alignment section. (Paper transport time is reduced by moving multiple sheets in one paper transport operation.)
6. While the first and second sheets of the second set are transported to the alignment section, the stapled first set is discharged to the main tray.

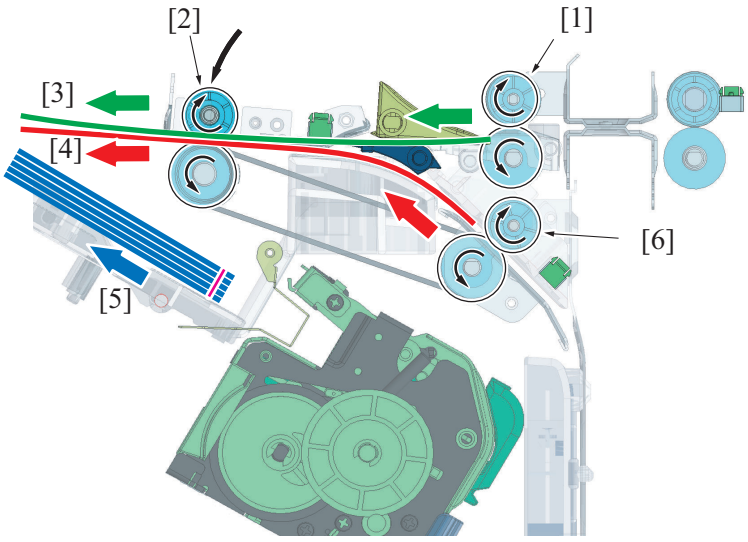


| | | | |
|---|---|---|---|
| [1] | FNS section transport roller (forward rotation) | [2] | Receiving roll (pressure, forward rotation) |
| [3] | Second sheet of the second set | [4] | First sheet in the second set |
| [5] | First set of sheets | [6] | FNS section exit roller (forward rotation) |

7. The receiving roll is not lifted when the third to fifth sheets of the second set passes through the roller. These sheets are transported to the alignment section in the normal manner.
8. When the fifth sheet of the second set is transported to the alignment tray, the second set is stapled.
9. The operations described above are repeated when multiple staple jobs are performed.

# 8. ALIGNMENT SECTION

## 8.1 Configuration

In the alignment section, paper transported from the transport section is aligned and discharged to the main tray.

1. Upper paddle section
   - Paper ejected from the receiving roller in the transport section is guided to the alignment section by the lowered paper guide.
   - The paper led to the alignment section will be switchbacked to the alignment tray by the upper paddle.
2. Exit section (Receiving operation)
   - The paper is switched back to the alignment tray by the lower paddle.
3. Stopper section
   - The paper that was switched back is aligned at its trailing edge by being pressed to the trailing edge stopper. (Paper alignment operation in FD)
   - If paper is stapled (2-point stapling), the stopper is retracted to the position where it does not interfere with the trailing edge stopper/F and trailing edge stopper/R.
4. Alignment tray section
   - When the first sheet is sent, the alignment plate is moved to the center to support the paper passing through the top of the plate. (Alignment plates are used as paper guide.)
   - If paper is not offset stacked, it is placed between the alignment plates so that both ends of the paper are aligned at the center position of the alignment tray. (Paper alignment operation in CD)
   - The paper gathered at the front or rear side on the alignment plate will be aligned on both sides of the paper. This process is repeated to sort out the paper. (CD alignment and shift operation of the paper)
5. Exit section (Exit operation)
   - The trailing edge stopper/C is shifted to press the paper out, and then the gripper receives the paper. The gripper then discharges the paper to the main tray.

Alignment section: Front perspective view

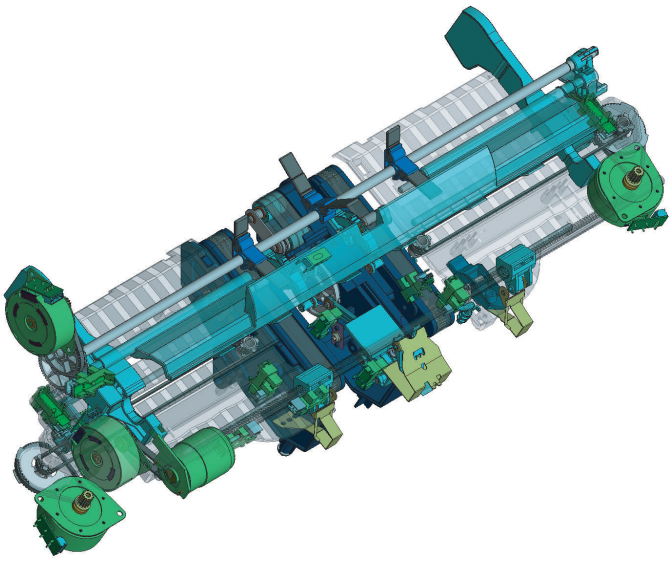

### 8.1.1 Upper paddle section

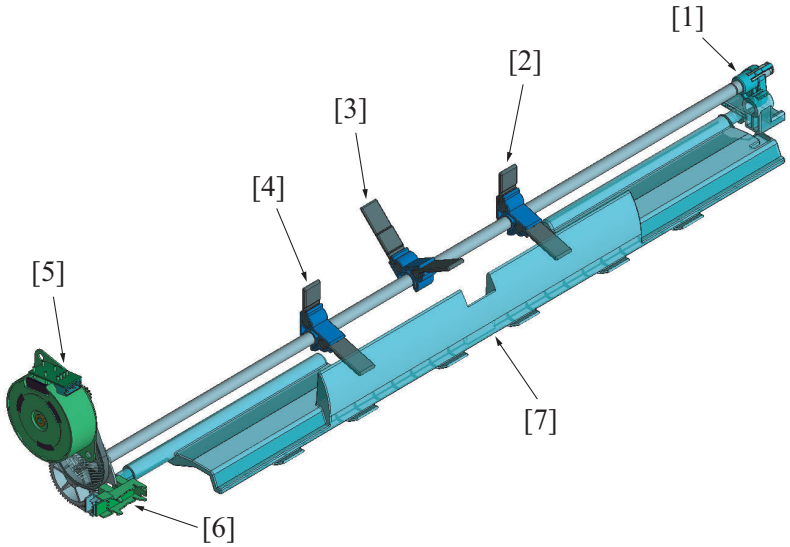


| | | | |
|---|---|---|---|
| [1] | Cam | [2] | Upper paddle (rear) |
| [3] | Upper paddle (center) | [4] | Upper paddle (front) |
| [5] | FNS paddle motor (M5) | [6] | Upper paddle home position detection sensor (PS14) |
| [7] | Paper guide | - | - |

### 8.1.2 Exit section

Exit section: Front perspective view

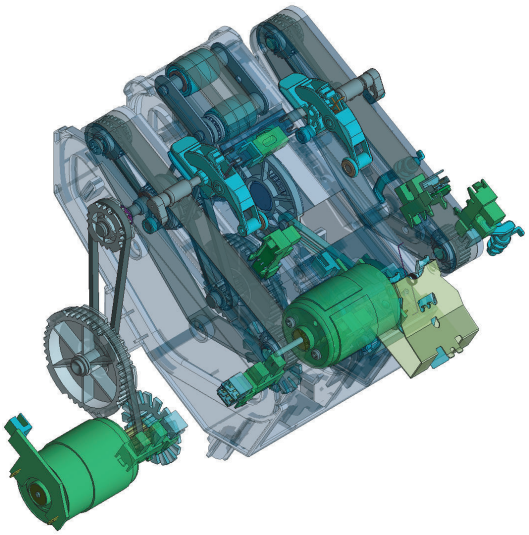

#### (1) Lower paddle section

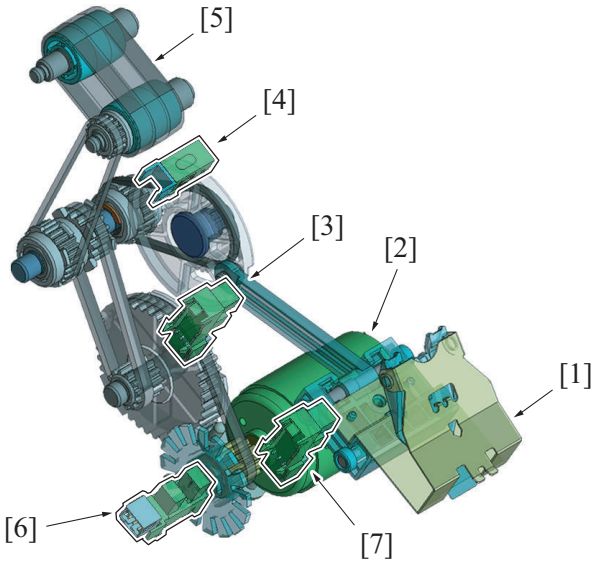


| | | | |
|---|---|---|---|
| [1] | Trailing edge stopper/C | [2] | Pre-eject drive motor (M9) |
| [3] | Pre-eject away sensor (PS22) | [4] | Staple stacker paper detection sensor (PS31) |
| [5] | Lower paddle | [6] | Pre-eject encorder sensor (PS15) |
| [7] | Pre-eject home sensor (PS21) | - | - |

#### (2) Gripper section

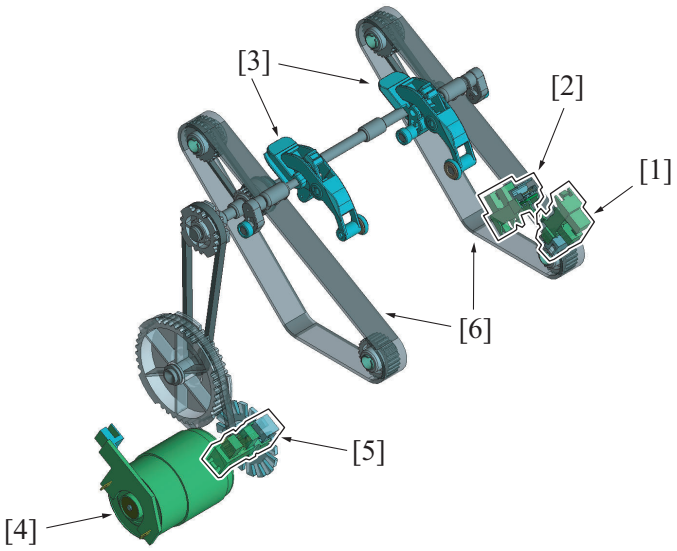

| | | | |
|---|---|---|---|
| [1] | Gripper home position sensor (PS18) | [2] | Gripper position detection sensor (PS19) |
| [3] | Gripper | [4] | Bundle eject motor (M10) |
| [5] | Gripper motor sensor (PS17) | [6] | Paper transport belt |

### 8.1.3 Stopper section (FD alignment section)

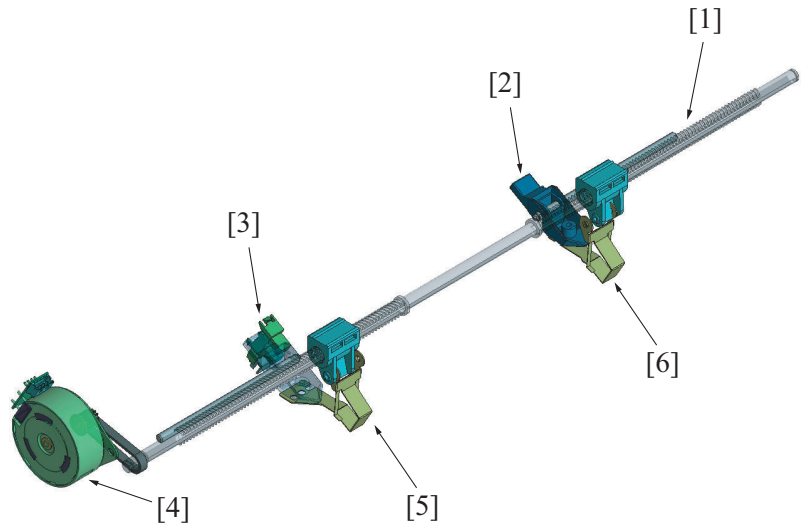


| | | | |
|---|---|---|---|
| [1] | Stopper moving shaft | [2] | Holder |
| [3] | Trailing edge stopper home position detection sensor (PS20) | [4] | Trailing edge stopper motor (M6) |
| [5] | Trailing edge stopper/Fr | [6] | Trailing edge stopper/Rr |

### 8.1.4 Alignment tray section (CD alignment section)

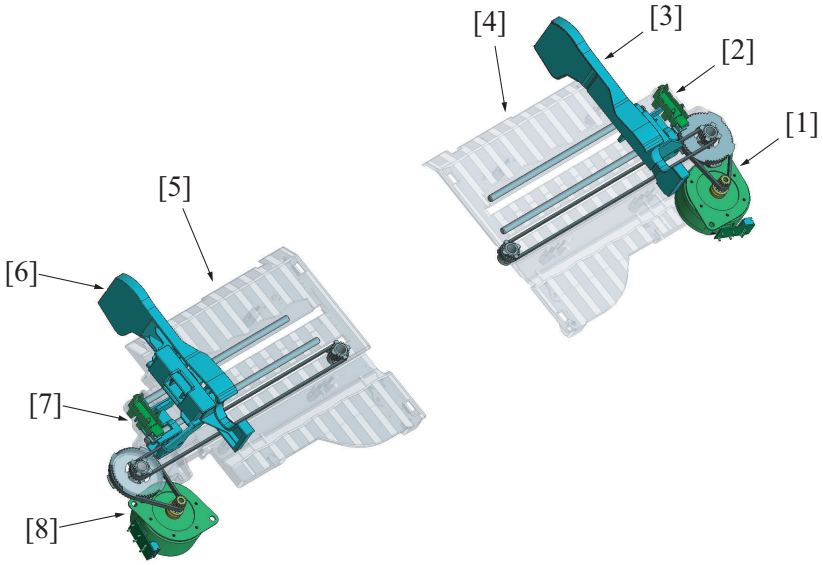


| | | | |
|---|---|---|---|
| [1] | Alignment motor/Rear (M8) | [2] | Alignment plate/R home sensor (PS13) |
| [3] | Alignment plate/R | [4] | Alignment tray (rear) |
| [5] | Alignment tray (front) | [6] | Alignment plate/F |
| [7] | Alignment plate/F home sensor (PS12) | [8] | Alignment motor/Front (M7) |

## 8.2 Drive

### 8.2.1 Drive outline

The driving source of the alignment section is the FNS paddle motor, pre-eject drive motor, bundle eject motor, trailing edge stopper motor, alignment motor, and the following parts are driven.

| Driving source | Driving parts | Function |
|---|---|---|
| FNS paddle motor (M5) | Paper guide | Transports paper to the alignment tray. |
| | Upper paddle | Draws and drops paper to the alignment tray. |
| Pre-eject drive motor (M9) | Lower paddle | Presses paper against the stopper in the alignment tray. |
| | Trailing edge stopper/C | • Aligns the trailing edge of paper (Alignment operation in FD)<br>• Pushes paper out to the main tray after alignment. |

| Driving source | Driving parts | Function |
|---|---|---|
| Bundle eject motor (M10) | Paper transport belt | Moves the gripper. |
| | Gripper | Grips the trailing edge of paper and discharges it to the main tray. |
| Trailing edge stopper motor (M6) | Trailing edge stopper /Fr | Moves the trailing edge stopper/Fr forward. It moves back and forth according to the paper width to keep the trailing edge of the paper batch at the front side. |
| | Trailing edge stopper /Rr | Moves the trailing edge stopper/Rr backward. It moves back and forth according to the paper width to keep the trailing edge of the paper batch at the back side. |
| Alignment motor/Front (M7) | Alignment plate/F | • Aligns both ends of paper (Alignment operation in CD)<br>• Pushes paper to the front or rear. (Shift operation) |
| Alignment motor/Rear (M8) | Alignment plate/R | |

### 8.2.2 Upper paddle section

- When the FNS paddle motor rotates, the upper paddles (3 pieces) located on the upper paddle shaft, rotates to draw and drop the paper to the alignment tray.
- The cam located on the upper paddle shaft rotates to move the paper guide up and down.

Front perspective view

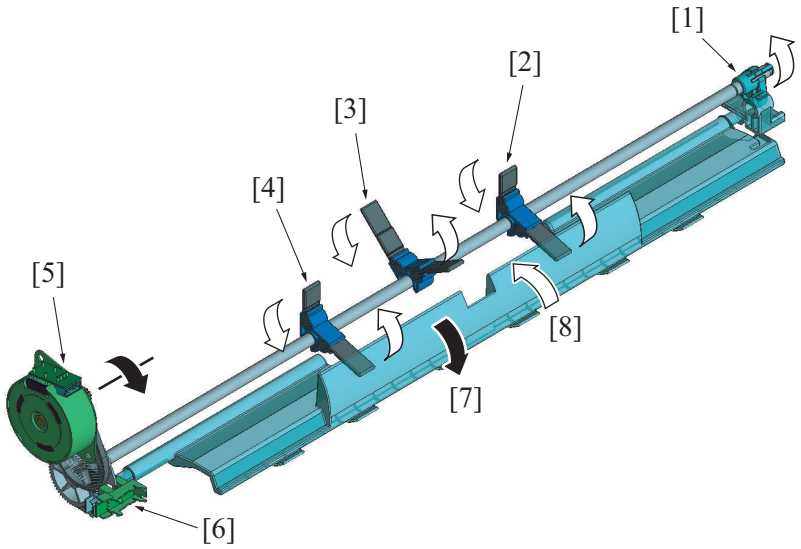


| | | | |
|---|---|---|---|
| [1] | Cam | [2] | Upper paddle (rear) |
| [3] | Upper paddle (center) | [4] | Upper paddle (front) |
| [5] | FNS paddle motor (M5) | [6] | Upper paddle home position detection sensor (PS14) |
| [7] | Paper guide (move down) | [8] | Paper guide (move up) |

Drive front view

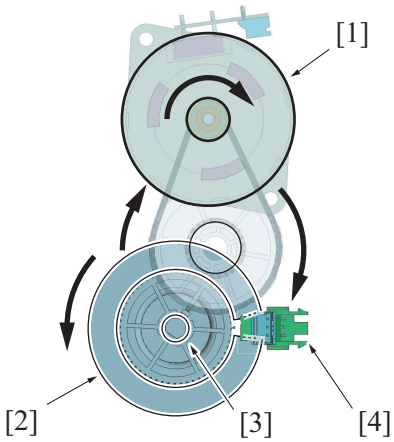


| | | | |
|---|---|---|---|
| [1] | FNS paddle motor (M5) | [2] | Detection plate (home position) |
| [3] | Upper paddle turning shaft | [4] | Upper paddle home position detection sensor (PS14) |

Paper guide front view

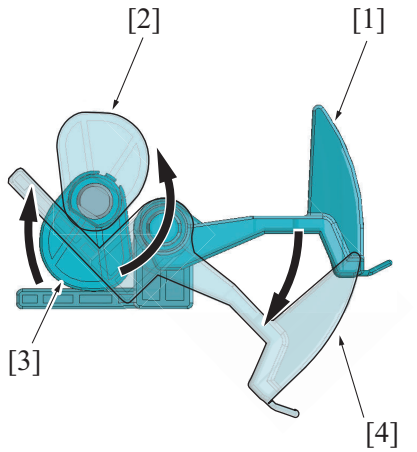


| | | | |
|---|---|---|---|
| [1] | Paper guide (upper position: home position) | [2] | Cam (upper position) |
| [3] | Cam (lower position: home position) | [4] | Paper guide (lower position) |

Upper paddle front view

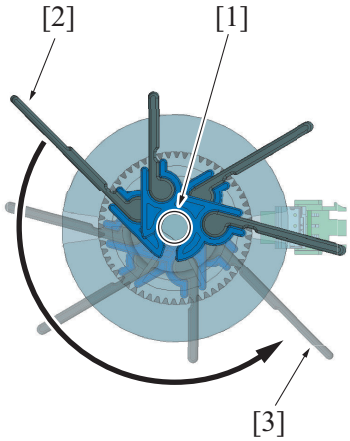


| | | | |
|---|---|---|---|
| [1] | Upper paddle turning shaft | [2] | Upper paddle (upper position: home position) |
| [3] | Upper paddle (lower position: make a turn and return to home position.) | - | - |

### 8.2.3 Exit section

- When the pre-eject drive motor rotates clockwise, the lower paddle rotates to press the paper against the trailing edge stopper.
- When the pre-eject drive motor rotates counterclockwise, the trailing edge stopper moves from the home position to the paper exit position to discharge paper to the main tray. When the drive gear makes a turn, the stopper moves from the paper exit position to the home position and is brought into a standby state.

Exit section: Front perspective view

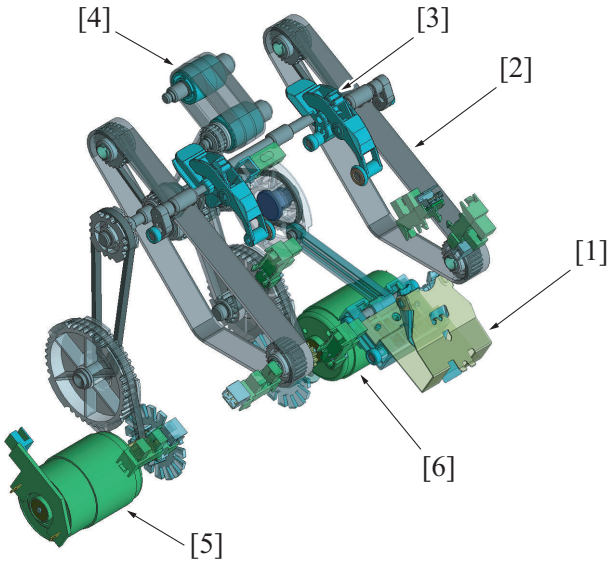


| | | | |
|---|---|---|---|
| [1] | Trailing edge stopper/C | [2] | Paper transport belt |
| [3] | Gripper | [4] | Lower paddle |

| | | | |
|---|---|---|---|
| [5] | Bundle eject motor (M10) | [6] | Pre-eject drive motor (M9) |

### (1) Lower paddle section

Front perspective view

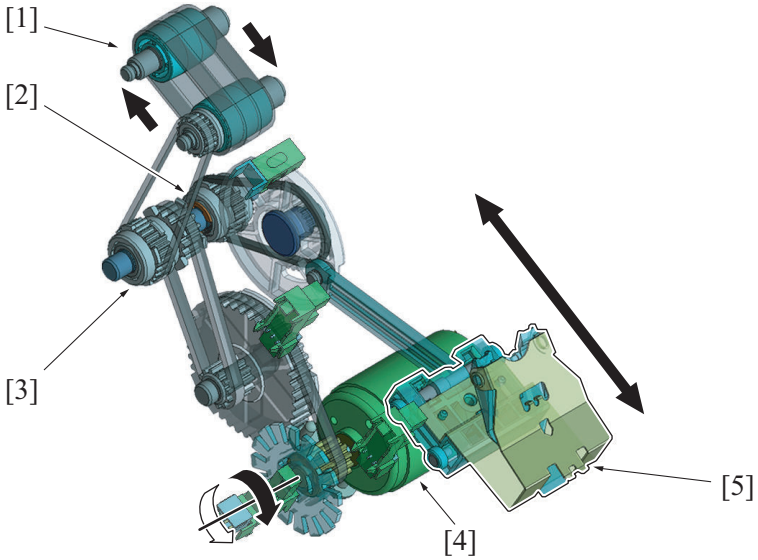


| | | | |
|---|---|---|---|
| [1] | Lower paddle | [2] | One-way clutch (for trailing edge stopper/C driving) |
| [3] | One-way clutch (for stopper driving) | [4] | Pre-eject drive motor (M9) |
| [5] | Trailing edge stopper/C | - | - |

Lower paddle drive front view

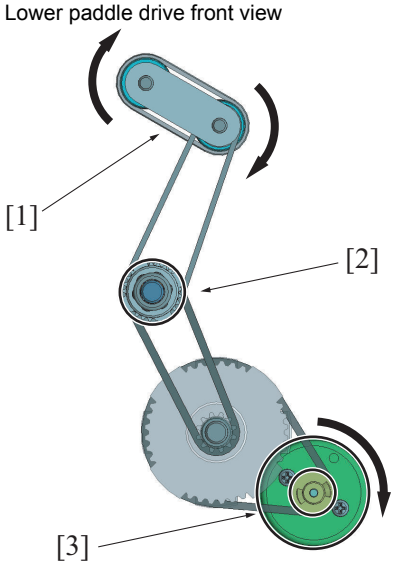


| | | | |
|---|---|---|---|
| [1] | Lower paddle | [2] | One-way clutch (for lower paddle driving: transmit driving force only to clockwise rotation) |
| [3] | Pre-eject drive motor (M9): clockwise rotation | - | - |

Trailing edge stopper/C drive front view

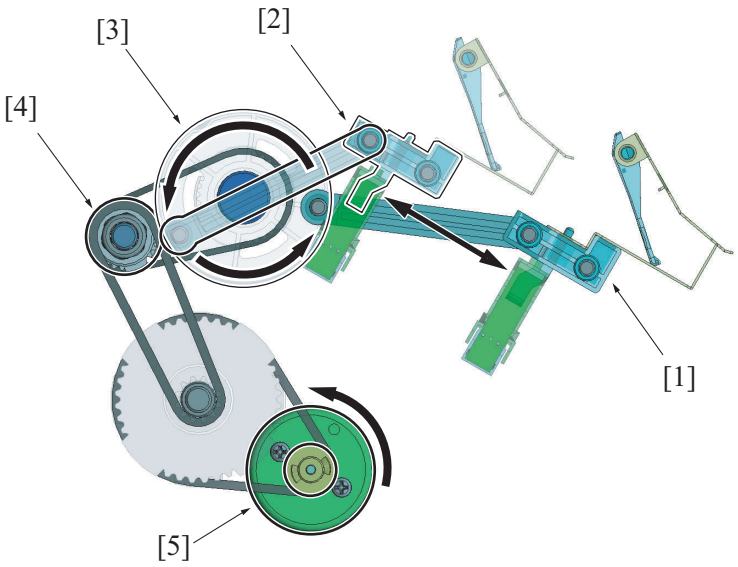


| | | | |
|---|---|---|---|
| [1] | Trailing edge stopper/C (home position) | [2] | Trailing edge stopper/C (paper exit position) |
| [3] | Drive gear | [4] | One-way clutch (for trailing edge stopper driving: transmit driving force only to counterclockwise rotation) |
| [5] | Pre-eject drive motor (M9): counterclockwise rotation | - | - |

### (2) Gripper section

- The bundle eject motor rotates to turn the paper transport belt. This causes the gripper, fixed to the paper transport belt, to rotate.

Front perspective view

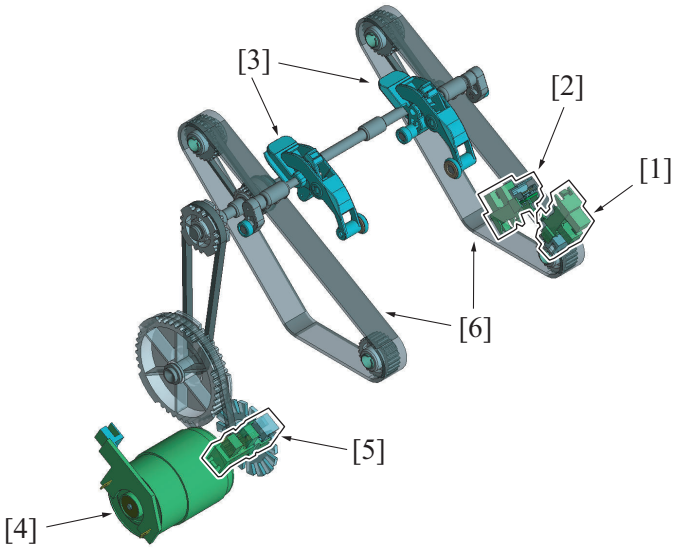


| | | | |
|---|---|---|---|
| [1] | Gripper position detection sensor (PS19) | [2] | Gripper home position sensor (PS18) |
| [3] | Gripper | [4] | Bundle eject motor (M10) |
| [5] | Gripper motor sensor (PS17) | [6] | Paper transport belt |

- The gripper stays at the home position (inside the exit section). It rotates at the position [1] shown in the illustration to grip the trailing edge of paper and transport the paper while keeping the state [2]. The gripper rotates at the position [3] in the illustration to release the paper. When the paper transport belt makes a turn, the gripper returns to the home position [5] and is brought into a standby state.

Gripper drive front view

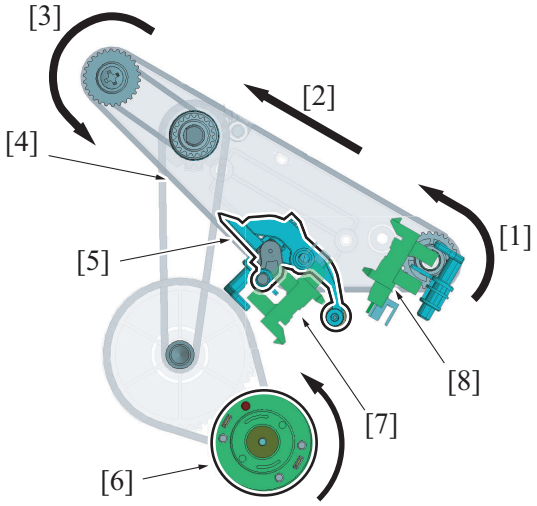


| | | | |
|---|---|---|---|
| [1] | Gripper position (gripping the paper) | [2] | Gripper position (transporting the paper) |
| [3] | Gripper position (release the paper) | [4] | Paper transport belt |
| [5] | Gripper (home position) | [6] | Bundle eject motor (M10) |
| [7] | Gripper home position sensor (PS18) | [8] | Gripper position detection sensor (PS19) |

### 8.2.4 Stopper section

- The shaft for stopper movement has a different spiral between the front and rear sides. This causes trailing edge stopper/Fr to move forward and trailing edge stopper/Rr to move backward when the trailing edge stopper motor rotates in the normal direction.
- Trailing edge stopper/F and the trailing edge stopper/R shift according to the paper width before starting a job, to hold the trailing edge of the paper.
- For 2-point staple jobs, the trailing edge stoppers/Fr and /Rr are retracted to the position where they do not interfere with the stapler.
- After the job is completed, the trailing edge stopper motor reverses the rotation to return the trailing edge stopper to the home position.

Front perspective view

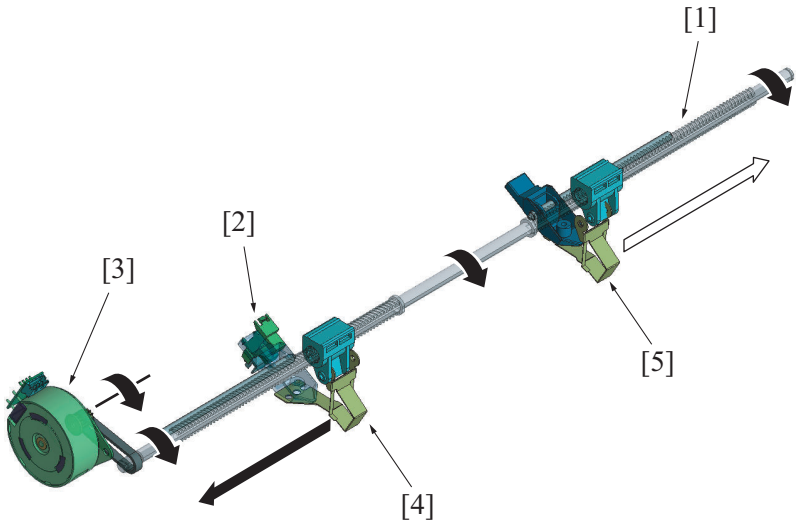


| | | | |
|---|---|---|---|
| [1] | Stopper moving shaft | [2] | Trailing edge stopper home position detection sensor (PS20) |
| [3] | Trailing edge stopper motor (M6) | [4] | Trailing edge stopper/Fr: home position |
| [5] | Trailing edge stopper/Rr: home position | - | - |

### 8.2.5 Alignment tray section

- The normal or reverse rotation of the alignment motor, allows the normal or reverse rotation of the drive belt. This causes the alignment plates to move forward or backward.
- Alignment plates/F and /R are each equipped with a drive motor, allowing them to operate independently. This enables paper alignment to the center, as well as paper shift to the front and rear.

Front perspective view

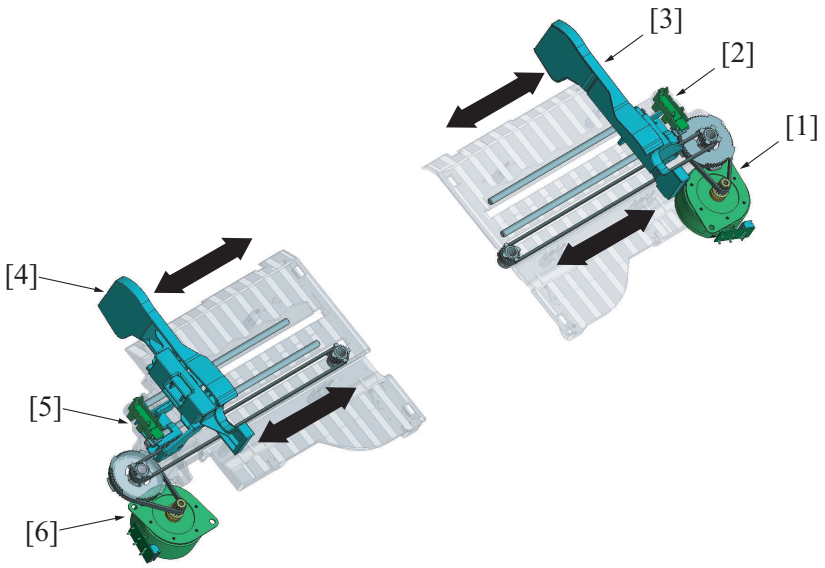


| | | | |
|---|---|---|---|
| [1] | Alignment motor/Rear (M8) | [2] | Alignment plate/R home sensor (PS13) |
| [3] | Alignment plate /R: home position | [4] | Alignment plate /F: home position |
| [5] | Alignment plate/F home sensor (PS12) | [6] | Alignment motor/Front (M7) |

## 8.3 Operation

### 8.3.1 Paper transport control in alignment section

Paper transported to the alignment section, is conveyed and aligned with the following operations.

1. The receiving roller in the transport section ejects paper *1.
   **NOTE**
   - ***1: For plain paper, due to buffer control, the first and second sheets of paper are ejected at the same time. For other than plain paper, the first paper is ejected.**
     **For details of the buffer control, see "PH.7.3.4 Buffer control".**
   - **The description below explains the paper transport control for plain paper.**

2. The alignment plates/F and /R are moved to the center.
3. The first and second sheets are transported onto the top of the alignment plates.
   **NOTE**
   - **This is to prevent the leading edge of the sheets from touching the lower paddle and being folded.**

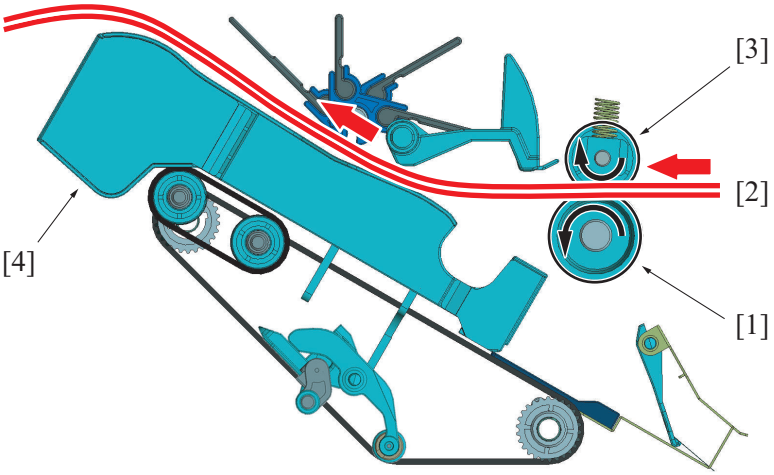


| | | | |
|---|---|---|---|
| [1] | Receiving roller | [2] | First and second sheets (for plain paper) |
| [3] | Receiving roll | [4] | Alignment plate/F, Alignment plate/R (moved to the center) |

4. The alignment plates return their home position. The alignment plate/F and the alignment plate/R shift to the waiting position according to the paper width immediately before the trailing edge of the paper passes the receiving roller.
5. When the trailing edge of the sheet passes through the receiving roller, the paper guide is lowered to guide the trailing edge of the sheet to the alignment tray.
6. The upper paddle rotates, and the upper and lower paddles grip the sheet. The sheet is transported into the alignment tray. (Operation on switchback) The sheets are transported into the alignment tray and are stopped by the trailing edge stopper. This allows aligning the trailing edge of the sheets. (paper alignment operation in FD)

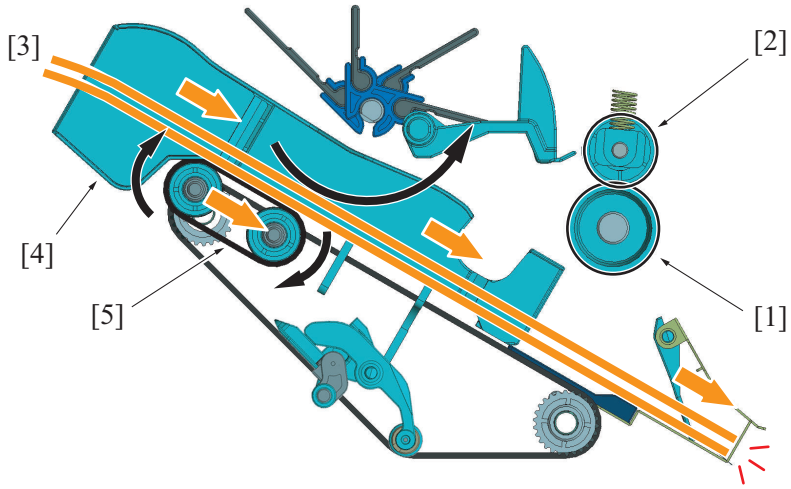


| | | | |
|---|---|---|---|
| [1] | Receiving roller | [2] | Receiving roll |
| [3] | First and second sheets | [4] | Alignment plate/F, Alignment plate/R (Retracted to the home position) |
| [5] | Lower paddle (rotation) | - | - |

7. The alignment plates move to align the ends of the sheets. (Paper alignment in CD)
   - The sheets are placed between the alignment plates/F and /R corresponding to the paper width so that their both ends are aligned.

Upper view

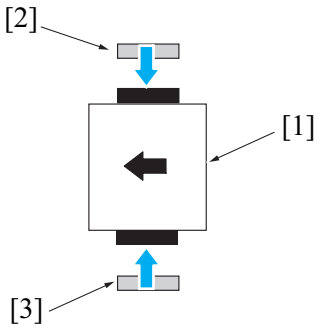


| | | | |
|---|---|---|---|
| [1] | Paper | [2] | Alignment plate /R (moving forward to front side) |
| [3] | Alignment plate/F (moving backward to rear side) | - | - |

   - The alignment operations described above are performed for all sheets of paper in the job to align the ends of the sets of paper.
8. When offset is selected as finishing option, the alignment plates are moved to shift the sets of paper.
   - Depending on the width of paper, the alignment plate/F or /R pushes the sets of paper to the rear side (or to the front side) from one side so that the sets of the paper are shifted.

Upper view

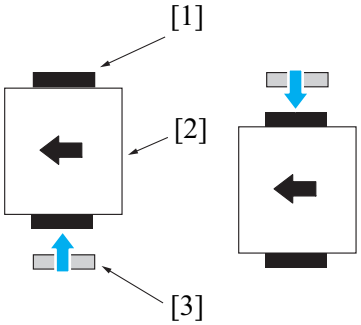


| | | | |
|---|---|---|---|
| [1] | Alignment plate/R | [2] | Paper |
| [3] | Alignment plate/F | - | - |

**NOTE**
- **The offset of paper (amount of shift) is 20 mm (13/16 inches).**

   - The sheets are shifted by alternatively repeating the above operation.
9. The third sheet is ejected by the receiving roller of the transport section.

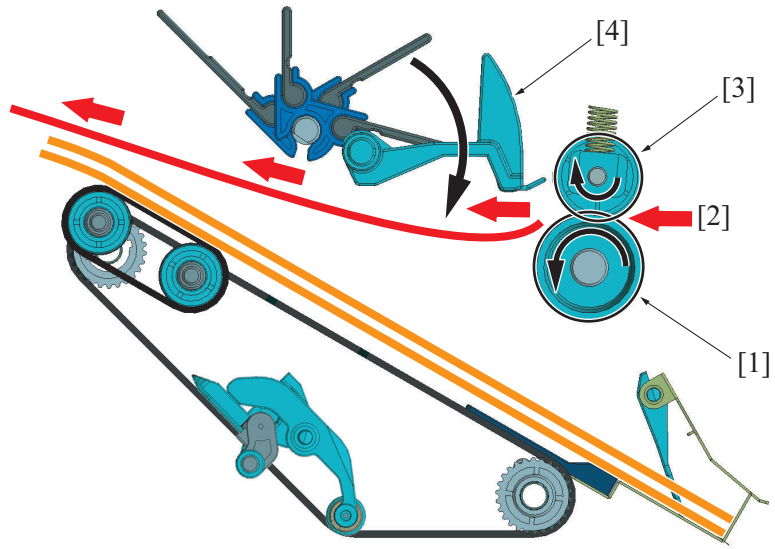


| | | | |
|---|---|---|---|
| [1] | Receiving roller | [2] | Third sheet |
| [3] | Receiving roll | [4] | Paper guide (upper position) |

*10.* When the trailing edge of the sheet passes through the receiving roller, the paper guide is lowered to guide the trailing edge of the sheet to the alignment tray.
*11.* The upper paddle rotates. The sheet is transported into the alignment tray. (Operation on switchback)
**NOTE**
- **When the switchback operation for the 3rd sheet or later, the lower paddle does not rotate.**

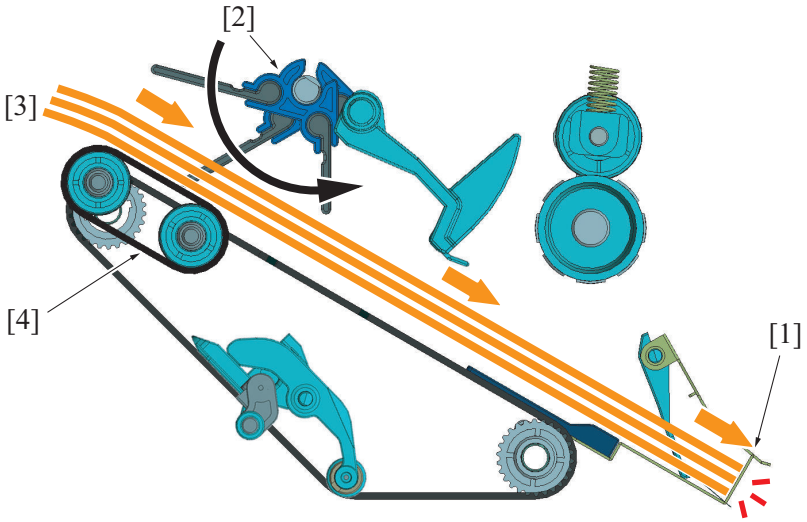


| | | | |
|---|---|---|---|
| [1] | Trailing edge stopper | [2] | Upper paddle (rotation) |
| [3] | Paper | [4] | Lower paddle (rotation) |

*12.* The sheet is stopped by the trailing edge stopper. This allows aligning the trailing edge of the sheets. (Paper alignment operation in FD)
*13.* The alignment plates move to align the ends of the sheets. (Paper alignment operation in CD)
**NOTE**
- **CD alignment operation is omitted since it is described in steps 7 to 8.**

*14.* For staple mode, the trailing edges of the sheets are stapled at this timing.
*15.* When all paper alignment is completed, the trailing edge stopper pushes the sheets to the position where the gripper can grip them.
*16.* The gripper grips the trailing edges of the sets of paper in the alignment tray and transports them to the paper exit position.

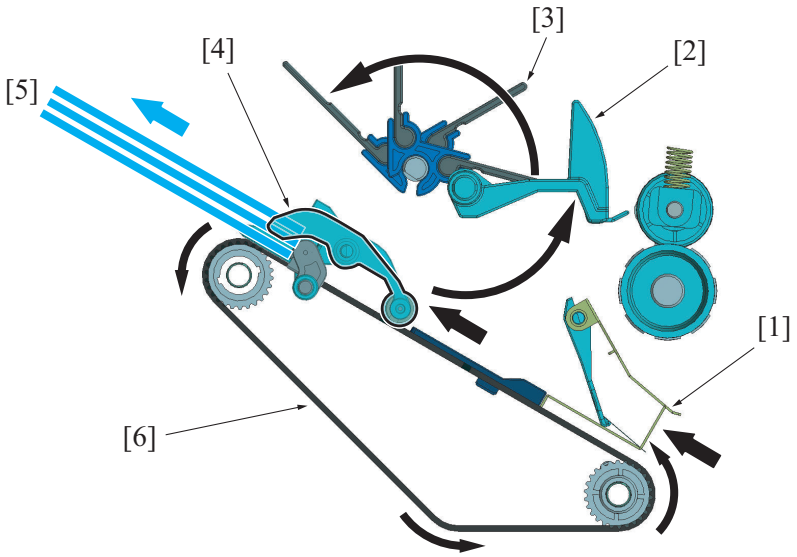


| | | | |
|---|---|---|---|
| [1] | Trailing edge stopper/C (paper gripping position) | [2] | Paper guide (upper position: home position) |
| [3] | Upper paddle (upper position: home position) | [4] | Gripper (move) |
| [5] | Paper bunch | [6] | Paper transport belt (rotation) |

*17.* The gripper releases the sets of paper to discharge them to the main tray. The gripper is moved to the home position and brought into a standby state.

# 9. STAPLER SECTION

## 9.1 Configuration/Drive

In the stapler section, staples are pressed through the sheets aligned in the alignment section so that the sheets are fastened together as a batch.

### 9.1.1 Configuration

Front perspective view

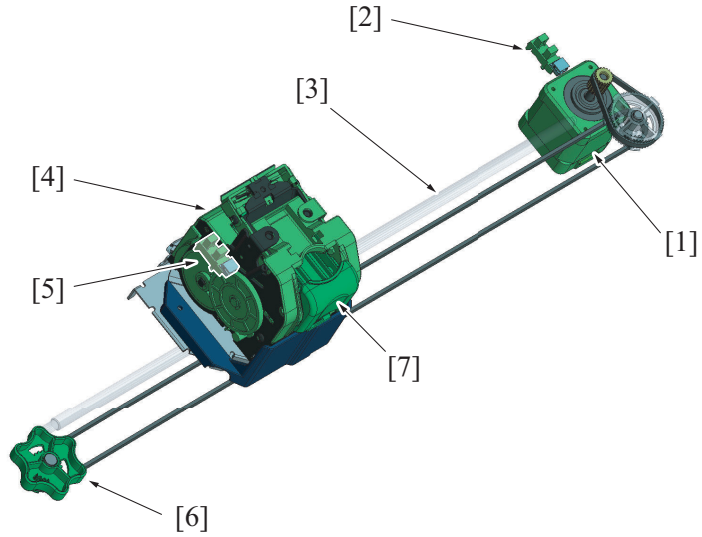


| | | | |
|---|---|---|---|
| [1] | Side stapler movement motor (M13) | [2] | Stapler home position sensor (Rear) (PS23) |
| [3] | Shaft | [4] | Stapler unit |
| [5] | Stapler position sensor (Center) (PS24) | [6] | Stapler move dial |
| [7] | Staple cartridge | - | - |

Front view

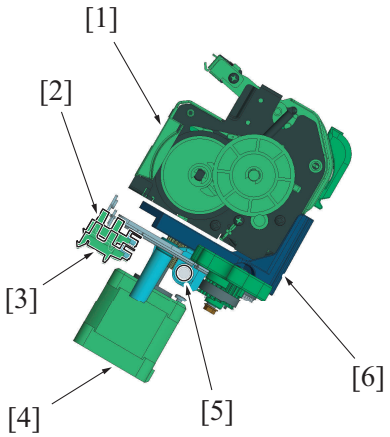


| | | | |
|---|---|---|---|
| [1] | Stapler unit | [2] | Stapler home position sensor (Rear) (PS23) |
| [3] | Stapler position sensor (Center) (PS24) | [4] | Side stapler movement motor (M13) |
| [5] | Shaft | [6] | Stapler holder |

### 9.1.2 Drive

- The driving source of the staple section is the side stapler movement motors, stapler motor built into the staple unit, and the following parts are driven.

| Driving source | Driving parts | Function |
|---|---|---|
| Side stapler movement motor | Staple unit | Back and forth movement and rotation of the stapler unit |
| Stapler | Clincher staple arm | Paper stapler |

- When the side stapler movement motor rotates, the belt is driven by the pulley and the stapler holder attached to the belt moves back and forth along the shaft.
- When the staple unit moves to the stapler home position, the staple cartridge replacement or the corner staple position, the shape of the slide guide plate causes the staple unit to rotate.

**NOTE**

- **The staple unit is rotated at the staple cartridge replacement position to ease replacement work.**

Front perspective view

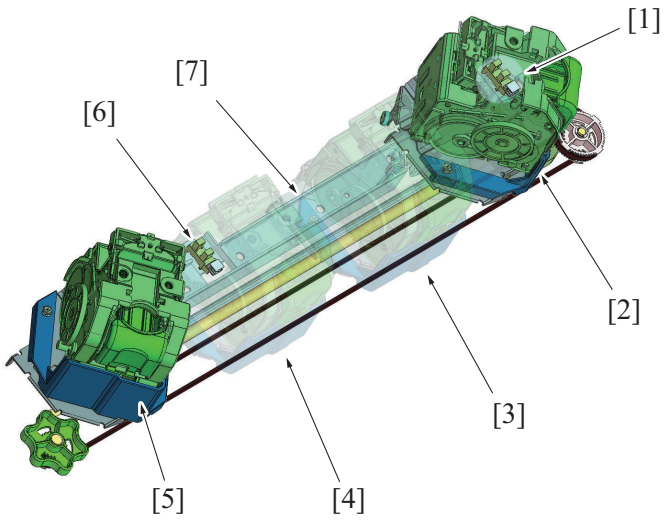


| | | | |
|---|---|---|---|
| [1] | Stapler home position sensor (Rear) (PS23) | [2] | Stapler unit (home position) |
| [3] | Stapler unit (2-staple position) | [4] | Stapler unit (2-staple position) |
| [5] | Stapler unit (staple cartridge replacement position) | [6] | Stapler position sensor (Center) (PS24) |
| [7] | Slide guide plate | - | |

## 9.2 Operation

### 9.2.1 Stapler positioning control

#### (1) Stapler home position detection control

- The stapler home position sensor (rear) detects the stapler home position. The stapler's staple position is detected by the amount of motor rotation provided by the stapler home position sensor (rear) and stapler position sensor (center).
- In the corner staple mode, the stapler moves to the corner staple position and staples paper.
- In the 2-staple mode, the stapler moves to the 2-staple position (rear) and staples paper. Then it moves to the next 2-staple position (front) and staples the paper. After the stapling operation is completed, the stapler returns to the home position.

Upper view

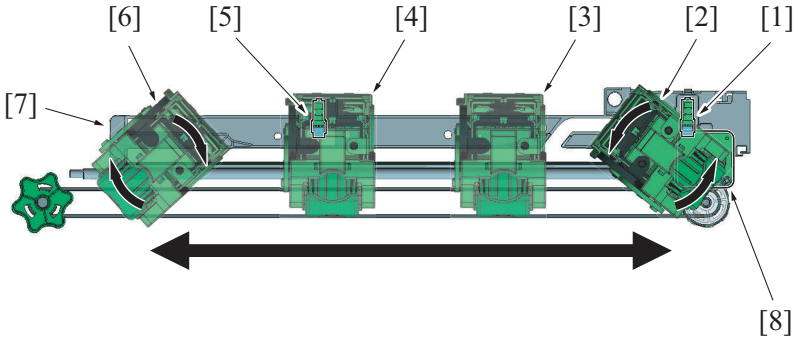


| | | | |
|---|---|---|---|
| [1] | Stapler home position sensor (Rear) (PS23) | [2] | Stapler unit (home position) |
| [3] | Stapler unit (2-staple position: rear) | [4] | Stapler unit (2-staple position: front) |
| [5] | Stapler position sensor (Center) (PS24) | [6] | Stapler unit (staple cartridge replacement position) |
| [7] | Slide guide plate | [8] | Side stapler movement motor (M13) |

#### (2) Staple cartridge replacement position detection control

- The stapler position sensor (center) detects the staple cartridge replacement position. (The stapler determines that it arrives at the replacement position based on how much the side stapler movement motor rotates after the stapler passes the stapler position sensor (center).
- When staple empty is detected, the staple unit moves to the staple cartridge replacement position, rotates, and stays at the position.
- User can replace the staple cartridge by opening the front door.
  **NOTE**
  - **Using the stapler move dial, user can replace the staple cartridge without moving the staple unit.**
- When staple cartridge replacement is completed and the front door is closed, the stapler returns to the home position.

### 9.2.2 Stapling control

#### (1) Stapling operation

- The stapling operation is driven by the stapler motor.
- In the stapling operation, the clincher staple arm is lowered by the stapler motor. The clincher staple arm presses the sheets. (This is called clamp operation.) Then a staple is pushed up by the staple arm from the stapler side. The staple is pressed through the sheets and bent from the clincher staple arm side, so that the sheets are fastened together. The stapler motor then lifts the clincher staple arm and lowers the staple arm to complete the stapling operation.

- The number of sheets that user wishes to staple are placed into the alignment tray and the stapling operation is performed. However, if the number exceeds the upper limit, the stack of sheets is discharged to the exit tray without being stapled.
  **NOTE**
  - **Refer to C.10.3.3 Sort staple for the specifications on the number of sheets that can be stapled.**

Overall view

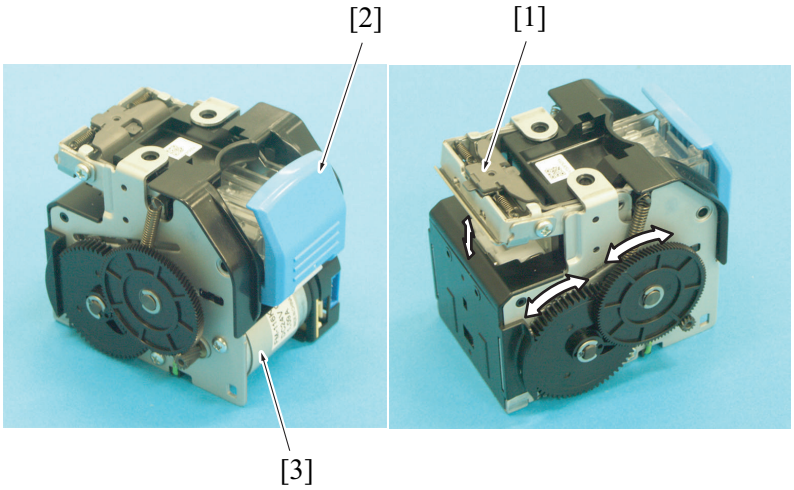


| | | | |
|---|---|---|---|
| [1] | Clincher staple arm | [2] | Staple cartridge |
| [3] | Stapler motor | - | - |

Front view

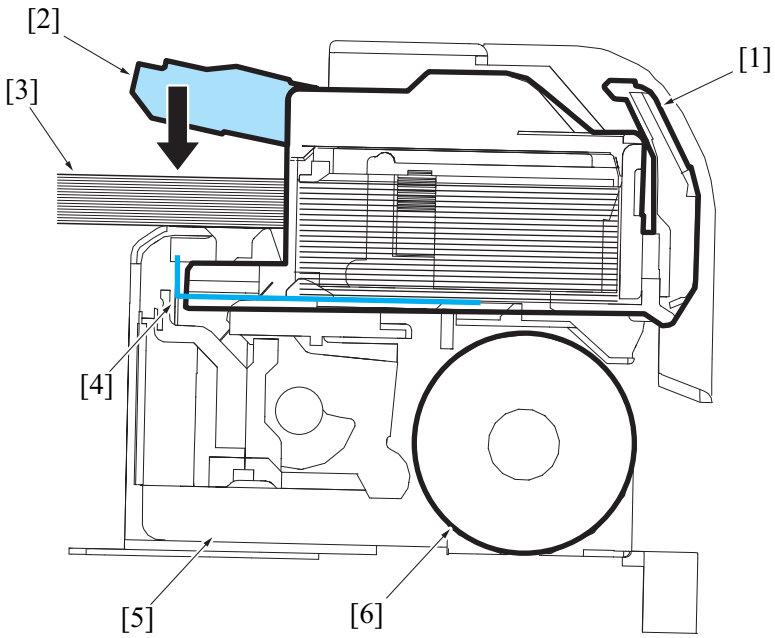


| | | | |
|---|---|---|---|
| [1] | Staple cartridge | [2] | Clincher staple arm |
| [3] | Paper bunch | [4] | Staple sheet (staple) |
| [5] | Stapler | [6] | Stapler motor |

### 9.2.3 Staple empty detection control

#### (1) Staple cartridge

- The stapler is provided with a staple cartridge used only for the stapler.
- To reload the stapler with staples, the staple cartridge is first loaded with staples (staple sheet type: 5000 staples) and then the staple cartridge is attached to the stapler.
  For information on how to load staplers, refer to the user's guide.

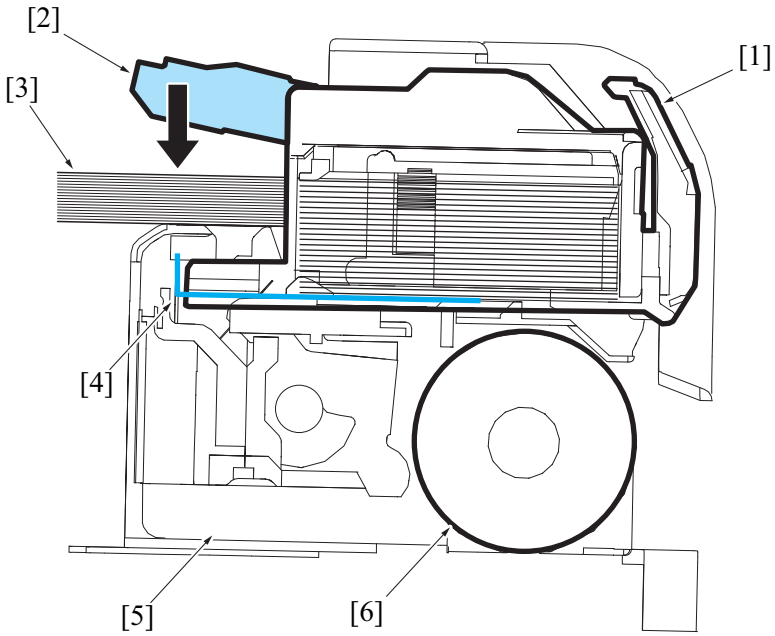


| | | | |
|---|---|---|---|
| [1] | Staple cartridge | [2] | Clincher staple arm |
| [3] | Paper bunch | [4] | Staple sheet (staple) |
| [5] | Stapler | [6] | Stapler motor |

### (2) Staple empty detection mechanism

- The stapler includes the self-priming sensor and staple empty sensor to detect the status of the staple cartridge and staples.
- The staple cartridge is loaded with staple sheets, and a staple sheet is conveyed to the clinch position (staple position) from the lowest one.

State where staple sheets are loaded

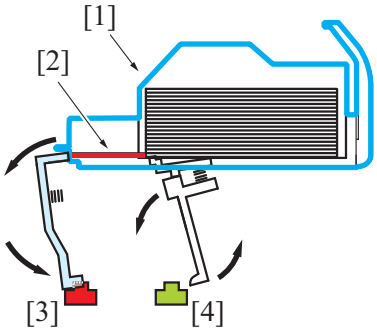


| | | | |
|---|---|---|---|
| [1] | Staple cartridge (loaded with staple sheets) | [2] | Staple sheet fed from the cartridge |
| [3] | Self-priming sensor (blocked) | [4] | Staple empty sensor (unblocked) |

- While the staple cartridge is loaded, if the trailing edge of the last staple sheet in the cartridge passes the actuator of the staple empty sensor, the actuator is raised by the spring force.
- When the actuator is raised, the staple empty sensor is blocked and machine determines that the cartridge is empty. The control panel displays the staple empty message.

State where the last staple sheet is fed

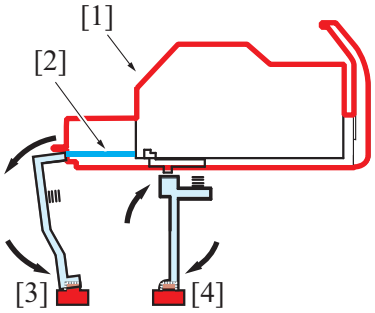


| | | | |
|---|---|---|---|
| [1] | Staple cartridge (staple empty) | [2] | Staple sheet (remainder) |
| [3] | Self-priming sensor (blocked) | [4] | Staple empty sensor (blocked) |

State where staple sheet runs out

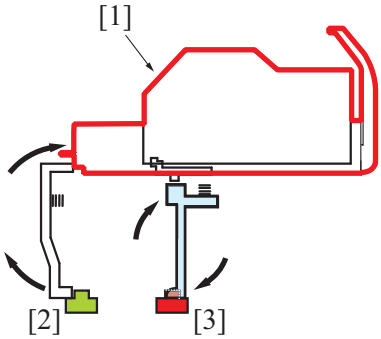


| | | | |
|---|---|---|---|
| [1] | Staple cartridge (empty) | [2] | Self-priming sensor (unblocked) |
| [3] | Staple empty sensor (blocked) | - | - |

- Even when the staple empty sensor detects the trailing edge of the last staple sheet, the staple sheet (staples: about 20) fed from the cartridge remains at the cartridge's front section. In this case, the actuator of the self-priming sensor is pressed down by the leading edge of the staple sheet.
- If the actuator is pressed down, the self-priming sensor is blocked and machine determines that the staple sheet is fed to the clinch position (staple position).
- Even when staple empty is detected, printing is not disabled. Paper is discharged without being stapled.
- After staple empty is detected, when the staple cartridge is loaded with staple sheets and the stapler is loaded with the cartridge, the actuator of the staple empty sensor is pressed down by the staple sheets.
- When the actuator is pressed down, the staple empty sensor is unblocked and staple empty condition is cleared. At this point, the staple empty sensor detects the staple sheets (unblocked). However, if the leading edge of the staple sheet cannot be detected by the self-priming sensor (unblocked), the clinch operation is repeated up to 20 times to feed the leading edge of the staple sheet to the position (clinch position) where it can be detected by the self-priming sensor.

State where staple sheet is not fed

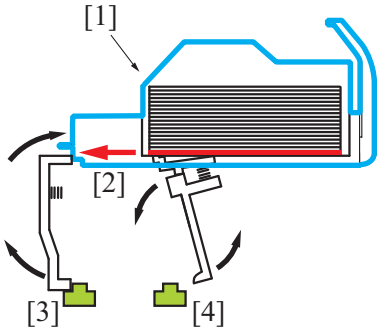


| | | | |
|---|---|---|---|
| [1] | Staple cartridge (loaded with staple sheets) | [2] | Staple sheet is fed by clinch operation |
| [3] | Self-priming sensor (unblocked) | [4] | Staple empty sensor (unblocked) |

- If the self-priming sensor cannot detect the leading edge of the staple sheet after clinch operations, machine determines that the staple sheet is not properly fed (staple sheet is not properly set) and the control panel displays the staple empty message.
- If the staple empty message appears even after staple sheets are loaded, check whether the staple sheets is properly set in the staple cartridge. If the cartridge is clogged with a staple sheet, clear the sheet.
- If staple empty occurs, the stapler stays at the staple cartridge replacement position. (position where staples can be supplied only by opening the front door).

### (a) When the staple cartridge is not loaded

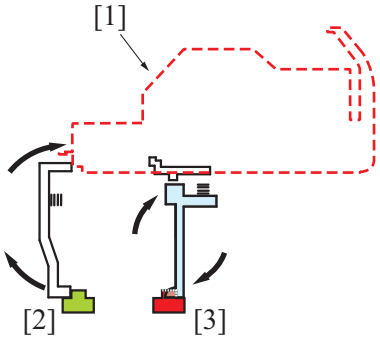


| | | | |
|---|---|---|---|
| [1] | Staple cartridge (not mounted) | [2] | Self-priming sensor (unblocked) |
| [3] | Staple empty sensor (blocked) | - | - |

- The actuator of the staple empty sensor is raised by the spring force. The staple empty sensor is blocked.
- The actuator of the self-priming sensor is raised by the spring force. The self-priming sensor is unblocked.
- MFP determines that the cartridge is empty and the control panel displays the staple empty message.

### 9.2.4 Clogged staple detection control

- Stapling operation is performed by lowering of the clincher staple arm and lifting of the staple arm.
- The staple arm position is detected by the staple home sensor located in the stapler.
- The stapler determines that the stapling operation is completed if the staple arm returns to the home position within the specified time after the stapling operation. If the staple arm does not return to the home position after the specified time has passed, the machine determines that staple trouble has occurred and an error message appears on the control panel.

# 10. RECEIVING SECTION

## 10.1 Configuration

### 10.1.1 Configuration outline

- In the receiving section, paper transported into the finisher is placed into each tray.

Overall: Front perspective view

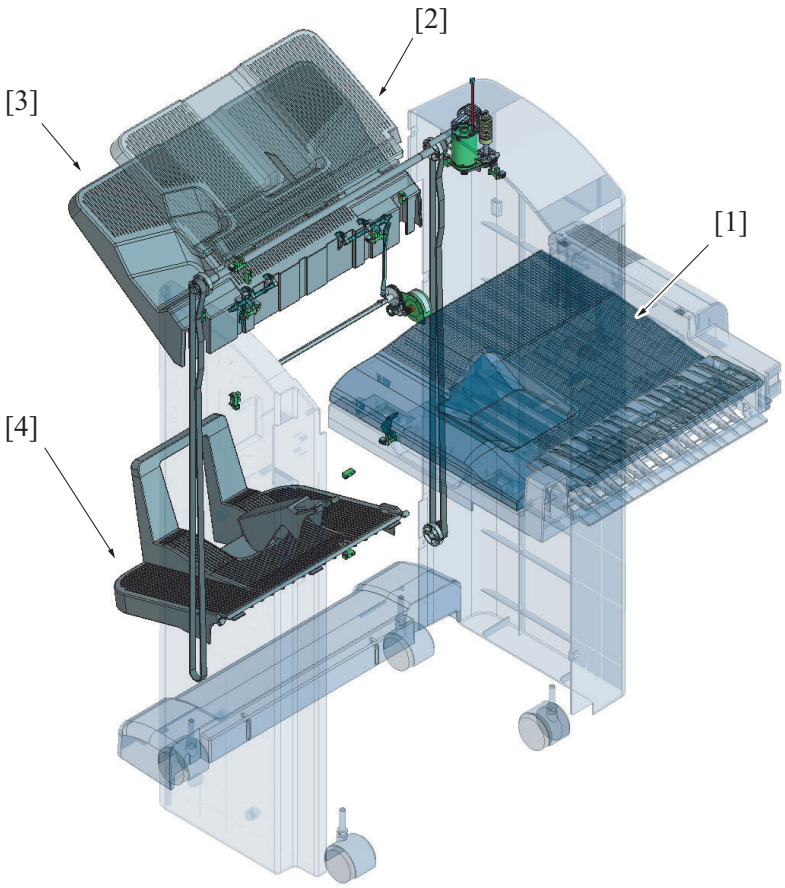


| | | | |
|---|---|---|---|
| [1] | 3rd tray (RU section upper position) | [2] | Sub tray |
| [3] | Main tray | [4] | Saddle tray (FS-534SD only) |

#### (1) Main tray

- Stores paper that is aligned in the alignment section.
- The tray's up/down mechanism moves the tray down depending on the amount of paper loaded, so that a large capacity of paper can be placed. The tray also includes the mechanism for detecting the amount of loaded paper.
- The paper stacking capacity for trays is different between the FS-534 and FS-534SD.

**NOTE**

- **For details on the paper stacking capacity, refer to C.10.3 Paper process ability.**

#### (2) Sub tray

- Stores paper that is transported from the transport section without passing through the alignment section.
- The tray is a fixed type without the up/down mechanism. The tray includes the mechanism for detecting the amount of loaded paper.

**NOTE**

- **For details on the paper stacking capacity, refer to C.10.3.1.(1) Sub tray.**

#### (3) 3rd tray

- It stores the paper that is transported from the MFP paper exit section.
- The upper part of the RU section door can be used as the exit tray. The tray includes the mechanism for detecting the amount of loaded paper.

**NOTE**

- **For details on the paper stacking capacity, refer to C.10.3.1.(3) 3rd tray.**

#### (4) Saddle tray

**NOTE**

- **FS-534SD only**
- Stores paper that is center-stapled in the saddle section is placed in the tray.
- The tray is a fixed type without the up/down mechanism. The tray does not have the sensor for detecting the amount of loaded paper. (To detect paper full, the number of sets discharged to the tray is counted.)

**NOTE**
- **For details on the amount of loaded paper, refer to C.10.3.4 Saddle stitching/folding.**

### 10.1.2 Main tray

Main tray section: Front perspective view

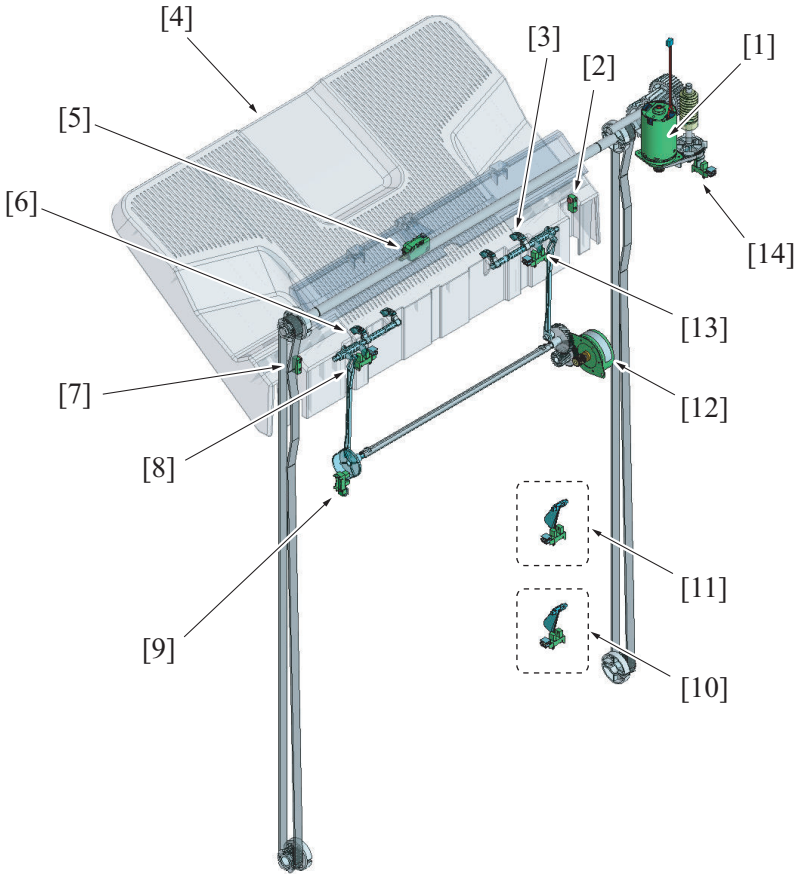


| | | | |
|---|---|---|---|
| [1] | Main tray up/down motor (M11) | [2] | Main tray upper sensor/out (PS6) |
| [3] | Paper detection lever/Rr | [4] | Main tray |
| [5] | Main tray upper position detect switch (SW2) | [6] | Paper detection lever/Fr |
| [7] | Main tray upper sensor (PS7) | [8] | Main tray upper position sensor/F (PS27) |
| [9] | Paper delivery control sensor (PS28) | [10] | Main tray full detection sensor (PS29) *1 |
| [11] | Main tray full detection sensor (PS29) *2 | [12] | Paper receiving control motor (M12) |
| [13] | Main tray upper position sensor/R (PS26) | [14] | Stacker motor sensor (PS25) |

- *1: Installation position for the FS-534 sensor
- *2: Installation position for the FS-534SD sensor

### 10.1.3 Sub tray

**NOTE**
- **For configurations of the paper transport path to the sub tray, refer to PH.7.1 Configuration.**

Sub tray section: Front perspective view

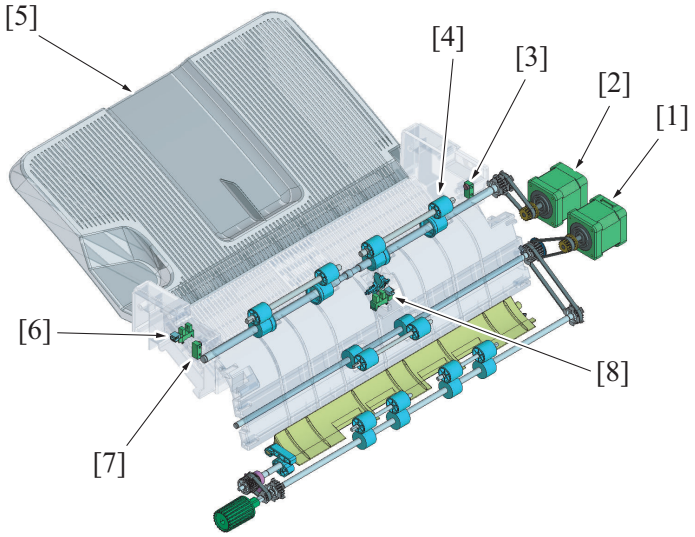


| | | | |
|---|---|---|---|
| [1] | FNS entry transport motor (M2) | [2] | FNS discharge motor (M3) |
| [3] | Sub tray full detection sensor/out (PS9) | [4] | Sub tray section exit roller |
| [5] | Sub tray | [6] | Upper cover open/close detection sensor (PS32) |
| [7] | Sub tray full detection sensor/in (PS10) | [8] | Sub tray exit sensor (PS8) |

### 10.1.4 3rd tray

**NOTE**

- **For configurations of the paper transport path to the 3rd tray, refer to O.15.1 Configuration..**

3rd tray section: Front perspective view

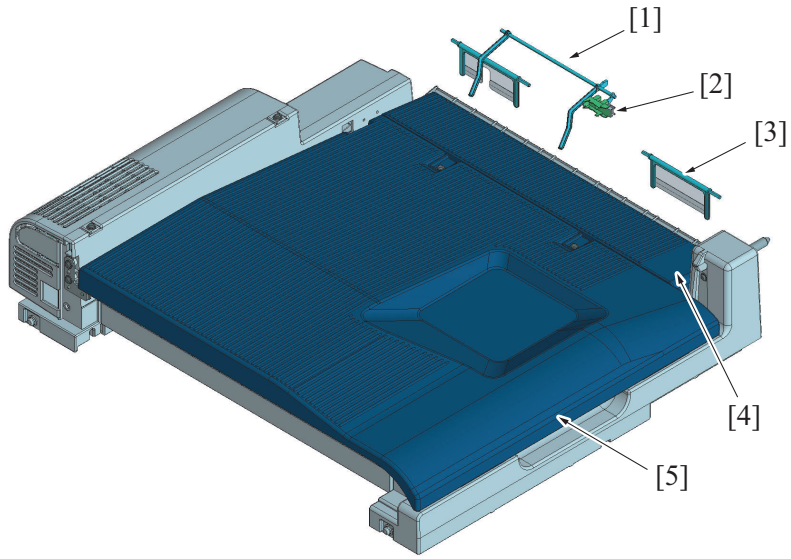


| | | | |
|---|---|---|---|
| [1] | 3rd exit tray full sensor actuator | [2] | 3rd exit tray full sensor (PS1) |
| [3] | Paper press | [4] | Paper feed guide plate |
| [5] | 3rd tray (RU section door) | - | - |

### 10.1.5 Saddle tray (FS-534SD only)

**NOTE**

- **FS-534SD only**
- **For configurations of the paper transport path to the saddle tray, refer to PH.11.1 Configuration.**

Saddle tray section: Perspective view

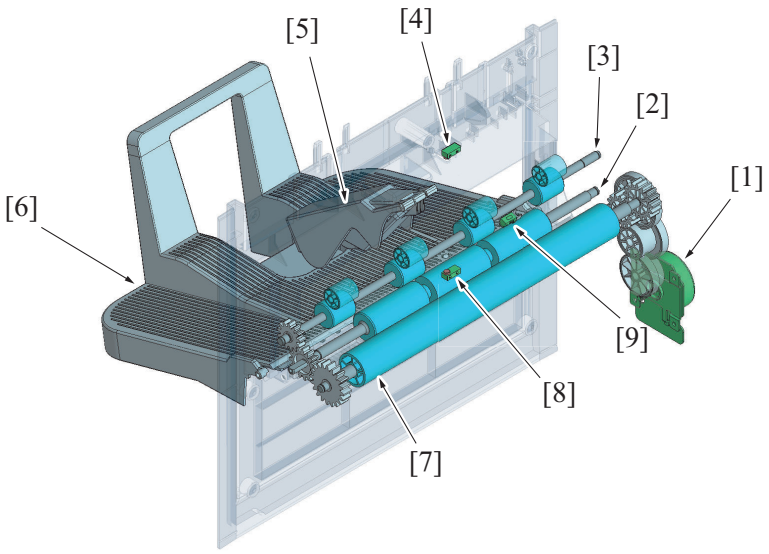


| | | | |
|---|---|---|---|
| [1] | Center fold roller motor (M5) | [2] | Tri-folding roller |
| [3] | Saddler section exit roller | [4] | Booklet tray empty detection sensor/in (PS13) |
| [5] | Paper press | [6] | Saddle tray |
| [7] | Center folding roller/2 | [8] | Booklet tray empty detection sensor/out (PS14) |
| [9] | Fold exit sensor (PS12) | - | - |

## 10.2 Drive

The driving source of the main tray section is the main tray up/down motor and the paper receiving control motor, and the following parts are driven.

| Driving source | Driving parts | Function |
|---|---|---|
| Main tray up/down motor (M11) | Main tray | • Normal rotation: The main tray is lowered depending on the number of sheets discharged into the main tray.<br>• Reverse rotation: After paper is removed, the main tray is lifted to the home position. |
| Paper receiving control motor (M12) | Paper detection lever | The height of stacked paper (amount of stacked paper) discharged to the main tray is detected. |

### 10.2.1 Main tray section

Front perspective view

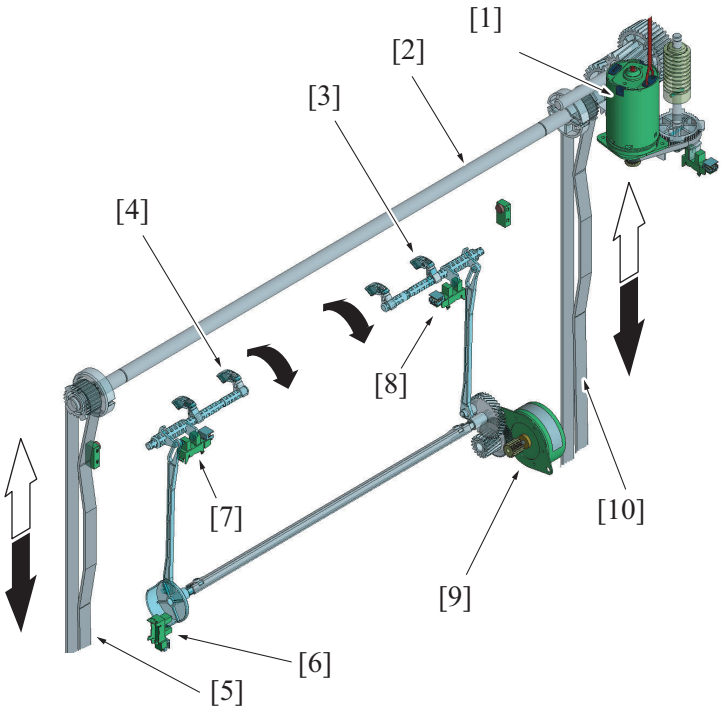


| | | | |
|---|---|---|---|
| [1] | Main tray up/down motor (M11) | [2] | Main tray driving shaft |

| | | | |
|---|---|---|---|
| [3] | Paper detection lever/Rr | [4] | Paper detection lever/Fr |
| [5] | Main tray drive belt/Fr | [6] | Paper delivery control sensor (PS28) |
| [7] | Main tray upper position sensor/F (PS27) | [8] | Main tray upper position sensor/R (PS26) |
| [9] | Paper receiving control motor (M12) | [10] | Main tray drive belt/Rr |

Front view

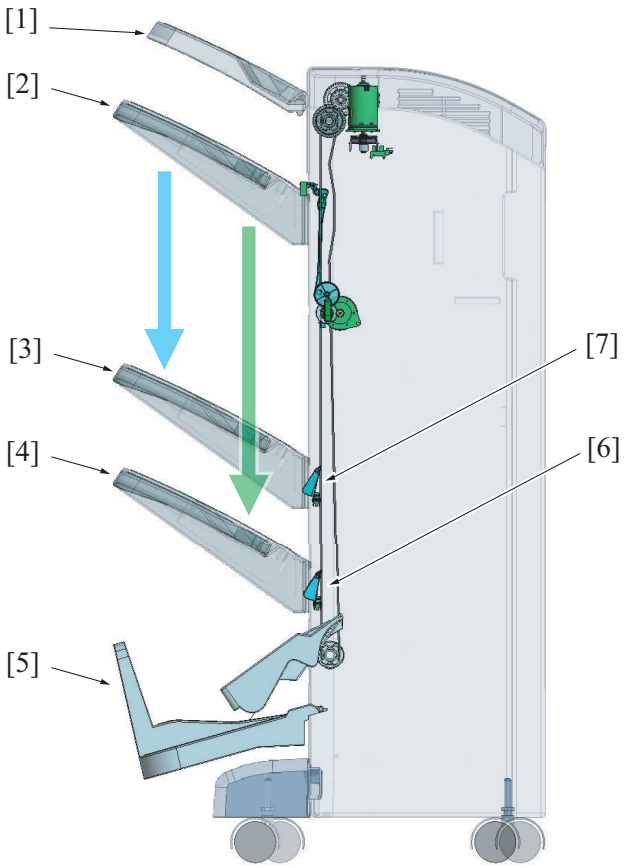


| | | | |
|---|---|---|---|
| [1] | Sub tray | [2] | Main tray (home position) |
| [3] | Main tray (main tray full position) *1 | [4] | Main tray (main tray full position) *2 |
| [5] | Saddle tray | [6] | Main tray full detection sensor (PS29) *2 |
| [7] | Main tray full detection sensor (PS29) *1 | - | - |

- *1: FS-534SD
- *2: FS-534

**(1) Mechanism for protecting main tray drive section**

CAUTION

- When the drive connection in the torque limiter is released, the main tray moves down under its own weight.
- To avoid finisher breakage and your injury, before releasing the drive connection in the torque limiter, be sure to support the main tray with your hand.

- The drive connection section of the main tray up/down drive mechanism has a torque limiter to prevent breakage.
- There may be an obstacle below the main tray during its downward movement. If the tray touches the obstacle and the force required to stop the lowering operation exceeds the specified value, the teeth of the drive gear rotates in the reverse direction and the driving force cannot be transmitted to the main tray. The torque limiter is used to prevent this situation from causing the breakage of the main tray drive mechanism and the main tray up/down motor.
- The main tray can be moved only upward with your hands. By manually pushing it upward with the force exceeding the specified value, the main tray can be raised. In contrast, as the torque limiter is not provided for the downward movement, the main tray cannot be lowered by pushing it down. If the tray is forcibly pushed downward, the main tray drive mechanism can be damaged.
- If the main tray needs to be manually lowered for maintenance and repair, the tray can be lowered by releasing the drive connection in the torque limiter.

Front perspective view

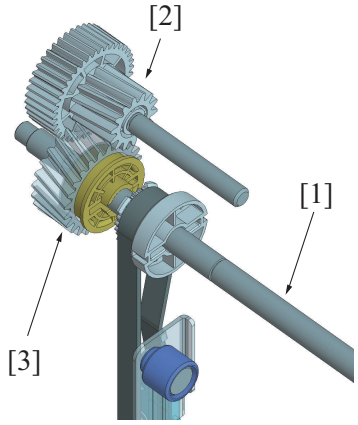


| | | | |
|---|---|---|---|
| [1] | Main tray driving shaft | [2] | Main tray up/down motor drive connecting gear |
| [3] | Torque limiter | - | - |

#### (a) Method for releasing the drive connection

1. Remove the rear cover.
2. Support the main tray with your hand so that it does not fall down.
3. Slide the area of the torque limiter, located on the main tray driving shaft, as shown to the front side of the main body. The connection of the drive gears is released and the main tray is lowered.

Side view

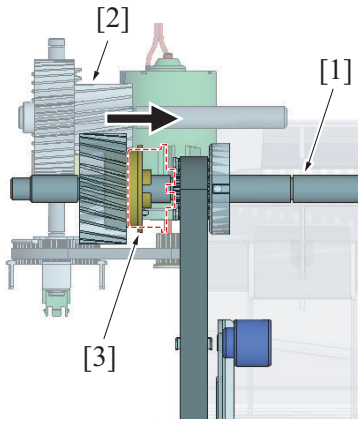


| | | | |
|---|---|---|---|
| [1] | Main tray driving shaft | [2] | Main tray up/down motor drive connecting gear |
| [3] | Torque limiter | - | - |

### 10.2.2 Sub tray section

**NOTE**

- **For information on the drive in the sub tray (between transport section and sub tray section), refer to PH.7.2 Drive in the transport section.**

### 10.2.3 3re tray section

**NOTE**

- **The 3rd tray does not have drive parts which requires drives source such as drive motor.**

### 10.2.4 Saddle tray section

**NOTE**

- **For information on the drive in the sub tray (between transport section and sub tray section), refer to PH.11.7.1 Drive in the transport section.**

## 10.3 Operation

### 10.3.1 Sub tray exit mechanism

- Paper transported from the RU section is discharged to the sub tray by the sub tray exit roller via the FNS paper feed roller, FNS transport roller, and sub tray vertical transport roller.
- To transport paper to the sub tray, the paper path switching gate also operates.
- The sub tray section exit roller is driven by the FNS discharge motor.

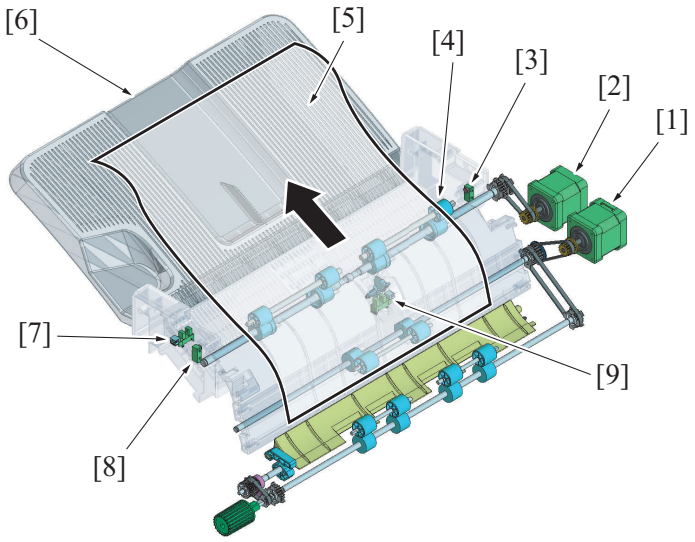


| | | | |
|---|---|---|---|
| [1] | FNS entry transport motor (M2) | [2] | FNS discharge motor (M3) |
| [3] | Sub tray full detection sensor/out (PS9) | [4] | Sub tray section exit roller |
| [5] | Paper | [6] | Sub tray |
| [7] | Upper cover open/close detection sensor (PS32) | [8] | Sub tray full detection sensor/in (PS10) |
| [9] | Sub tray exit sensor (PS8) | - | - |

### 10.3.2 Main tray paper level detection control

- The height of paper stacked on the main tray is always controlled to the specified level, by lowering the main tray depending on the amount of paper discharged to the main tray.
- The paper level is detected by the main tray upper position sensors/Fr and /Rr. Based on the detection results, the main tray height is controlled.
- The top end of the paper detection lever is lifted when the paper detection lever drive gear makes a half-turn. When the paper receiving control motor makes another half-turn, the end of the lever presses down the top of the trailing edge of the paper stacked on the main tray. Depending on the number of the sheets stacked or the height of the exit tray, the position of the paper detection lever changes.
- When the paper detection lever is at the home position, the main tray upper position sensor is unblocked. When the top end of the lever is lifted, the main tray upper position sensor is blocked. If the amount of stacked paper increases while the end of the lever presses down the top of the trailing edge of the paper stacked on the main tray, the paper detection lever becomes unable to return to the home position and the main tray upper position sensor is blocked. This causes machine to determine that the height of stacked paper exceeds the specified height. In this case, the main tray up/down motor is rotated and the main tray is lowered until the main tray upper position sensor is unblocked. When the main tray is lowered to the main tray full detection sensor, MFP determines that the main tray is full and the control panel displays the main tray full message.
- When main tray full is detected, the control panel displays the warning message. In this state, any main tray related configurations and jobs that use the main tray cannot be performed. The warning screen is cleared by removing the paper on the main tray. By removing the paper from the main tray, the paper detection lever is lowered. This causes machine to determine that the paper is removed and the “main tray full” message disappears.
- When the paper detection lever drive gear makes a turn, paper receiving control motor stops. The position of the paper detection lever drive gear is detected by the paper delivery control sensor.
- The paper level detection control is performed each time when paper is discharged to the tray to always monitor the height of paper. This control also serves as the function of preventing paper stacked on the tray from being disturbed by the paper discharged next.

Front view

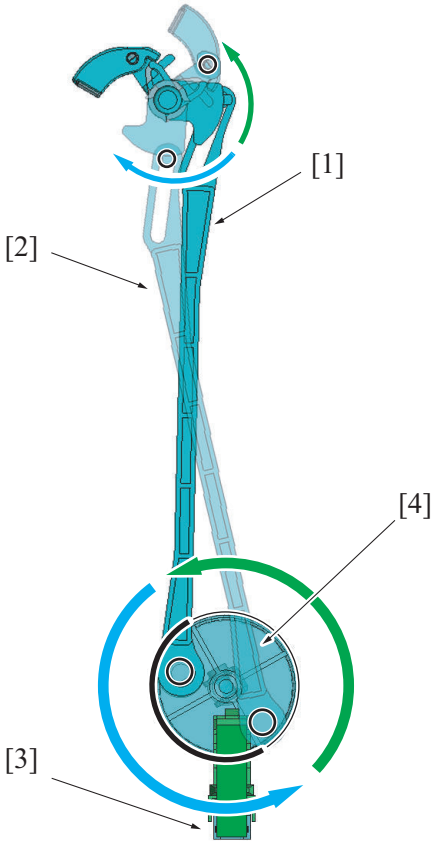


| | | | |
|---|---|---|---|
| [1] | Paper detection lever (home position) | [2] | Paper detection lever (upper position) |
| [3] | Paper delivery control sensor (PS28) | [4] | Paper detection lever drive gear |

### (1) Paper detection lever tip enlarged picture

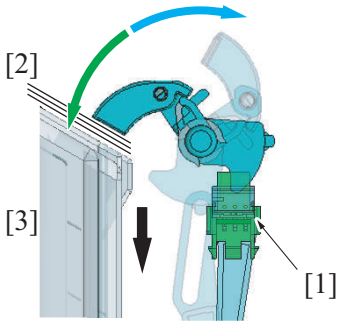


| | | | |
|---|---|---|---|
| [1] | • Main tray upper position sensor/F (PS27)<br>• Main tray upper position sensor/R (PS26) | [2] | Paper |
| [3] | Main tray | - | - |

### (2) Front view

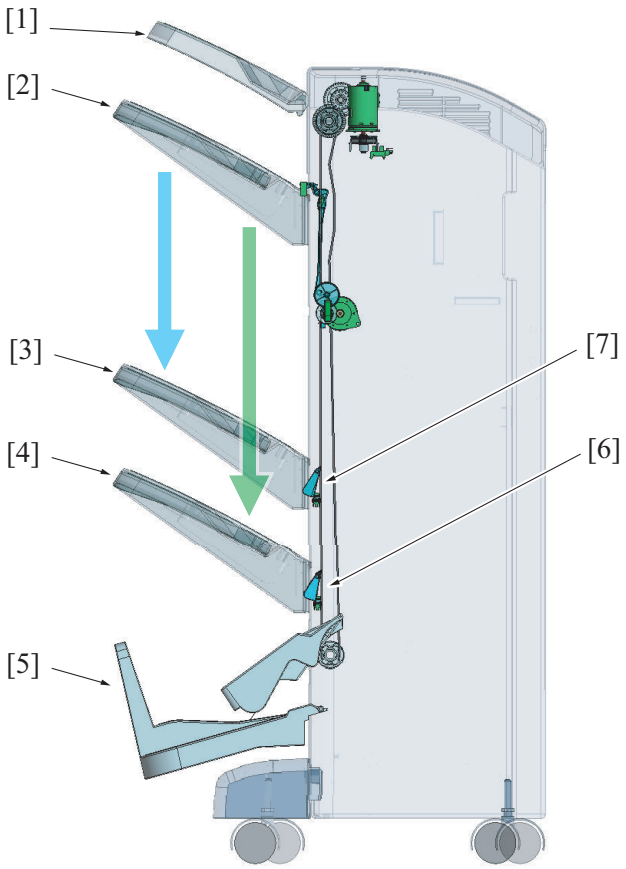


| | | | |
|---|---|---|---|
| [1] | Sub tray | [2] | Main tray (home position) |
| [3] | Main tray (main tray full position) *1 | [4] | Main tray (main tray full position) *2 |
| [5] | Saddle tray | [6] | Main tray full detection sensor (PS29) *2 |
| [7] | Main tray full detection sensor (PS29) *1 | - | - |

- *1: FS-534SD
- *2: FS-534

### (3) Amount of paper placed on the main tray

- The amount of paper placed on the main tray is different depending on the mode.
- When either the number or height of stacked sheets reaches the specified value, the main tray full is detected.

#### (a) Amount of paper placed on the main tray in sort or group mode

- For details on the paper stacking capacity, refer to C.10.3.1.(2) Main tray.

#### (b) Amount of paper placed on the main tray in sort offset or group offset mode

- For details on the paper stacking capacity, refer to C.10.3.2.(1) Main tray.

#### (c) Amount of paper placed on the main tray in staple mode

- For details on the paper stacking capacity, refer to C.10.3.3.(1) Main tray.

## 10.3.3 Main tray upper detection mechanism

- The main tray includes the upper limit detection mechanism. The mechanism is to avoid malfunction and breakage of the main tray up/down mechanism that may be caused by the tray being lifted higher than the specified position.
- While paper is stacked on the main tray, if the main tray moves up and the top of the stack pushes the alignment plate up, the main tray upper position detect switch cover is raised and the main tray upper position detect switch is pressed. This causes the main tray up/down motor to stop rotating and the main tray to stop moving upward.

**NOTE**

- **In the case of small paper of which width is shorter than the distance formed between the alignment plates when the alignments are at home position, the paper may directly pushes up the main tray upper position detect switch cover. In that case, the main tray upward movement is also stopped.**
- **While the main tray is moving upward, if user press the main tray upper position detect switch cover by mistake, the main tray upward movement is also stopped. In this case, when the main tray upper position detect switch cover is released, if the top surface of the main tray does not reach the specified height, the main tray moves up again. When the top surface of the main tray reaches the specified height, the upward operation stops.**
- **For details of the main tray up/down operation, refer to PH.10.3.2 Main tray paper level detection control.**

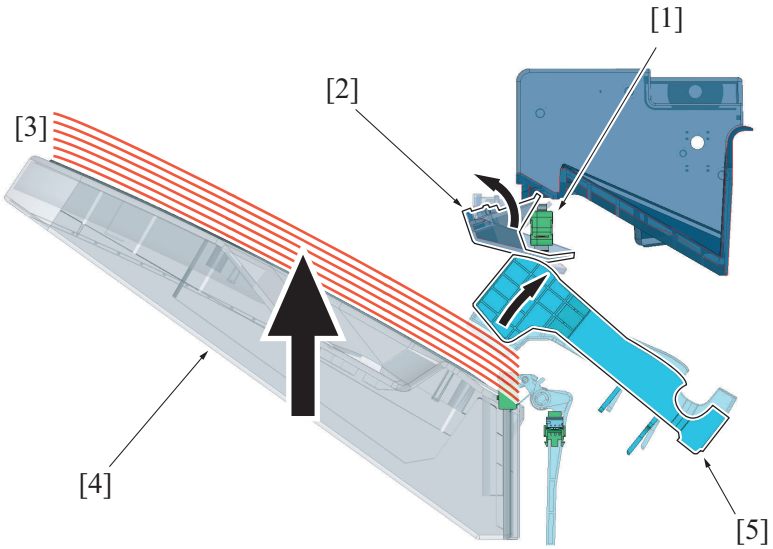


| | | | |
|---|---|---|---|
| [1] | Main tray upper position detect switch (SW2) | [2] | Main tray upper switch cover |
| [3] | Paper | [4] | Main tray |
| [5] | Alignment plate | - | - |

### 10.3.4 Tray full detection mechanism

#### (1) Main tray

- When machine determines that the amount of paper stacked on the main tray exceeds the specified height, the paper detection lever causes the main tray up/down motor to rotate to lower the main tray to the specified position. When the main tray is lowered to the position of the main tray full detection sensor, the main tray full is determined.
- When paper full is detected in either way, the warning message appears on the control panel. In this state, any main tray related configurations and jobs that use the main tray cannot be performed. The warning screen is cleared by removing paper from the main tray. For details of main tray up/down control, refer to PH.10.3.2 Main tray paper level detection control.

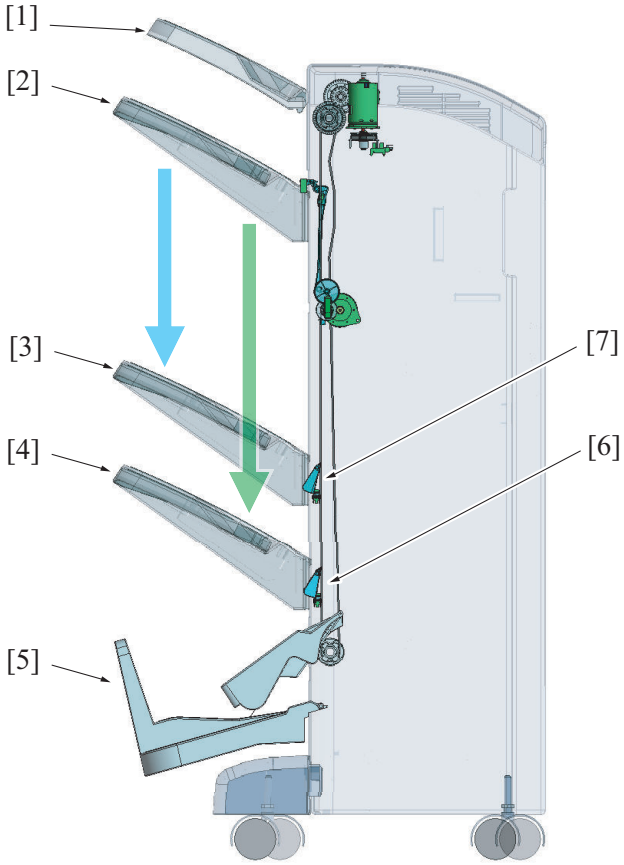


| | | | |
|---|---|---|---|
| [1] | Sub tray | [2] | Main tray (home position) |
| [3] | Main tray (main tray full position) *1 | [4] | Main tray (main tray full position) *2 |
| [5] | Saddle tray | [6] | Main tray full detection sensor (PS29) *2 |
| [7] | Main tray full detection sensor (PS29) *1 | - | - |

- *1: FS-534SD

- *2: FS-534

### (2) Sub tray

- When the specified amount of paper is discharged into the sub tray, the stacked paper blocks the sub tray full detection sensor. The sensor detects it as a full state of the exit tray.
- When the sub tray full is detected, the warning message appears on the control panel. In this state, any sub tray related configurations and jobs that use the sub tray cannot be performed. The warning screen can be cleared by removing the paper on the sub tray.

Front view

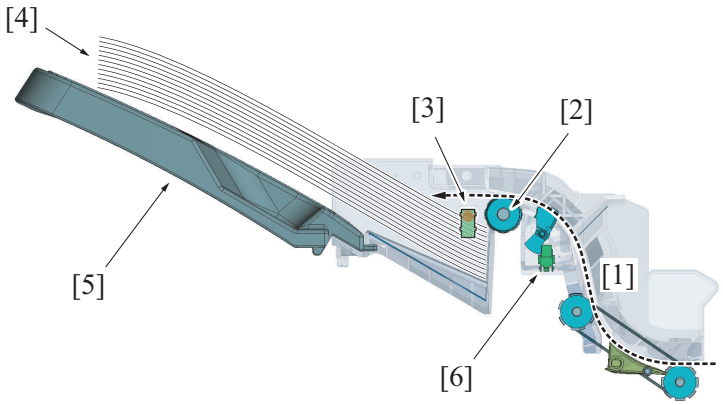


| | | | |
|---|---|---|---|
| [1] | Sub tray paper transport route | [2] | Sub tray section exit roller |
| [3] | • Sub tray full detection sensor/out (PS9)<br>• Sub tray full detection sensor/in (PS10) | [4] | Paper |
| [5] | Sub tray | [6] | Sub tray exit sensor (PS8) |

### (3) 3rd tray

- When the specified amount of paper is discharged into the 3rd tray, the stacked paper pushes up the 3rd tray full detection sensor actuator. When the actuator is pushed up to the predetermined position, the 3rd exit tray full sensor will be unblocked by the actuator to detect the exit tray full.
- The warning message will be displayed on the control panel when the 3rd tray full is detected. All setting operations and jobs will be disabled when the warning message is displayed on the screen. The warning message will be released by removing the paper on the 3rd tray.

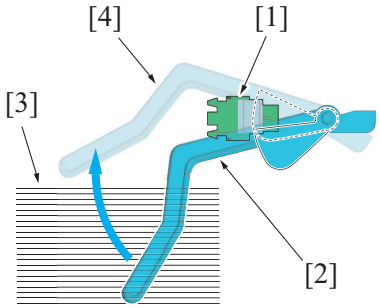


| | | | |
|---|---|---|---|
| [1] | 3rd exit tray full sensor (PS1) | [2] | 3rd exit tray full sensor actuator (no paper) |
| [3] | Paper | [4] | 3rd exit tray full sensor actuator (exit tray full) |

### (4) Saddle tray

**NOTE**

- **FS-534SD only**
- When paper is discharged to the saddle tray, the light from the saddle tray exit sensor is blocked. When the stacked sheets are removed, the sensor light is unblocked.
- When the specified amount of paper is discharged into the saddle tray, the stacked paper blocks the saddle tray exit sensor. The sensor detects it as a full state of the saddle tray.

  **NOTE**

  - **For a tri-fold job, if paper is present in the saddle tray when the job is started, the saddle tray full is detected. (Even only one set of sheets remains, tray full is detected.)**

- When the saddle tray full is detected, the warning message appears on the control panel. In this state, any saddle unit related configurations and jobs that use the saddle unit cannot be performed. The warning screen is cleared by removing the paper placed on the saddle unit.

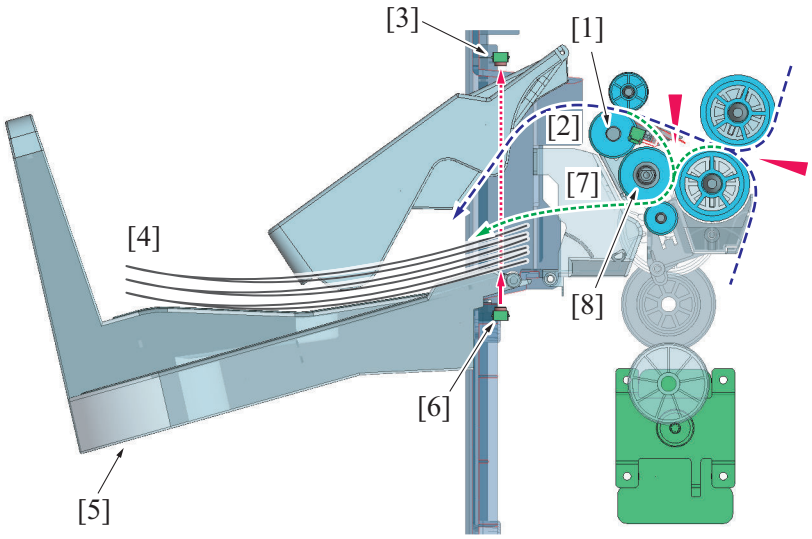


| | | | |
|---|---|---|---|
| [1] | Saddle section exit roller | [2] | Paper transport route: Center folding |
| [3] | Booklet tray empty detection sensor/in (PS13) | [4] | Paper |
| [5] | Saddle tray | [6] | Booklet tray empty detection sensor/out (PS14) |
| [7] | Paper transport route: Tri-folding | [8] | Tri-folding roller |

# 11. SADDLE SECTION (FS-534SD ONLY)

## 11.1 Configuration

**NOTE**

- **FS-534SD only**

Front left side perspective view

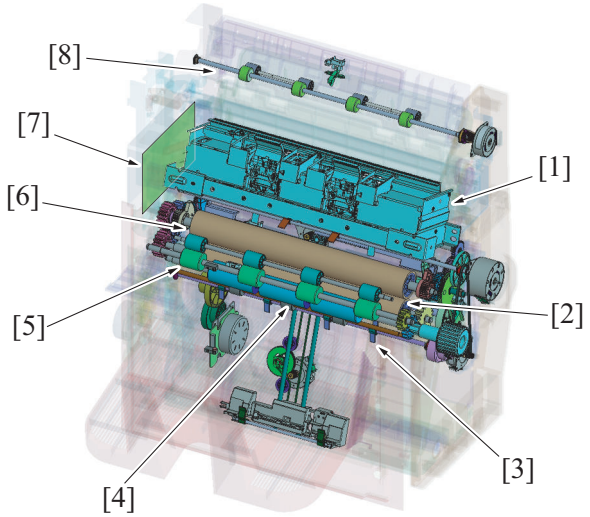


| | | | |
|---|---|---|---|
| [1] | Staple unit | [2] | Center folding roller/2 |
| [3] | Center fold section lower paddle | [4] | Tri-folding roller |
| [5] | Saddle section exit roller | [6] | Center fold roller/1 |
| [7] | SD drive board (SDDB) | [8] | Saddle section paper feed roller |

Front right side perspective view

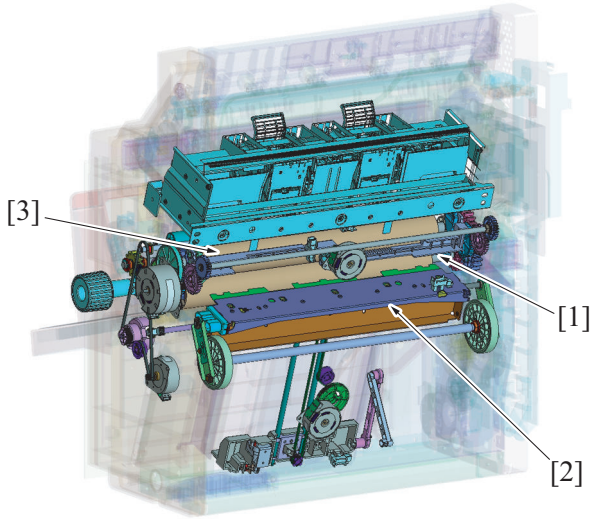


| | | | |
|---|---|---|---|
| [1] | Center staple alignment plate drive gear/Rr | [2] | Center fold knife |
| [3] | Center staple alignment plate drive gear/Fr | - | - |

Right side view

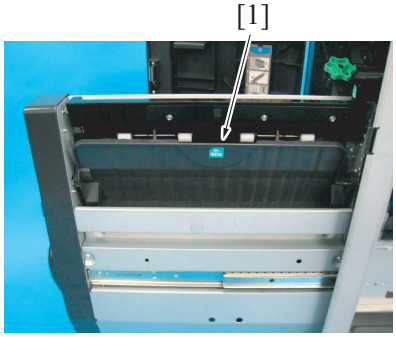


| | | | |
|---|---|---|---|
| [1] | Jam removal cover (transport section) | - | - |

Front left side perspective view

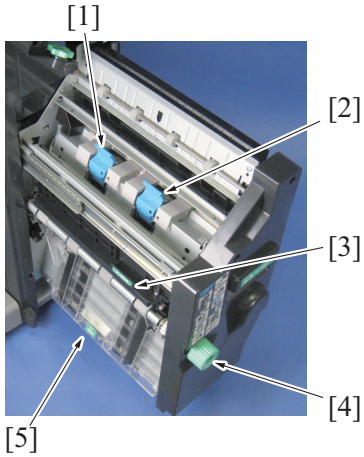


| | | | |
|---|---|---|---|
| [1] | Staple cartridge (rear side) | [2] | Staple cartridge (front side) |
| [3] | Jam removal cover (exit section) | [4] | Jam removal dial (folding section) |
| [5] | Jam removal cover (alignment section) | - | - |

## 11.2 Transport section

### 11.2.1 Drive

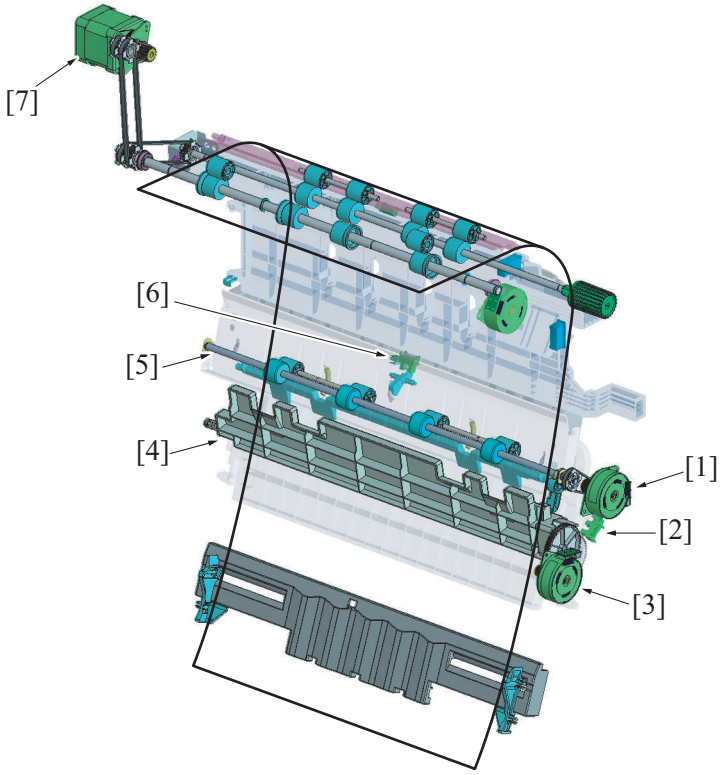


| | | | |
|---|---|---|---|
| [1] | SD transport motor (M1) | [2] | Curl cover detection sensor (PS2) |
| [3] | Paper discharge control motor (M2) | [4] | Curl cover |
| [5] | SD transport roller | [6] | SD entrance sensor (PS1) |
| [7] | FNS discharge motor (M3) | - | - |

### 11.2.2 Paper transport

- The FNS discharge motor rotates reversely to transport the paper from the finisher transport section into the saddle unit.
- The paper then is transported to the alignment section by SD transport roller.
- The SD transport roller rotates when the SD transport motor is driven.

### 11.2.3 Curl cover

- The paper is transported to the alignment section one–by-one. A paper which is curled may cause paper misfeed at the entrance of the saddle stitcher.
- In order to prevent this paper misfeed, the curl cover is installed so that each paper is transported to the alignment section without fail.
- The curl cover is operated by the paper discharge control motor. Paper receiving opens/closes the feeding port inside the saddle unit entrance when the paper discharge control motor rotates in forward/reverse direction.

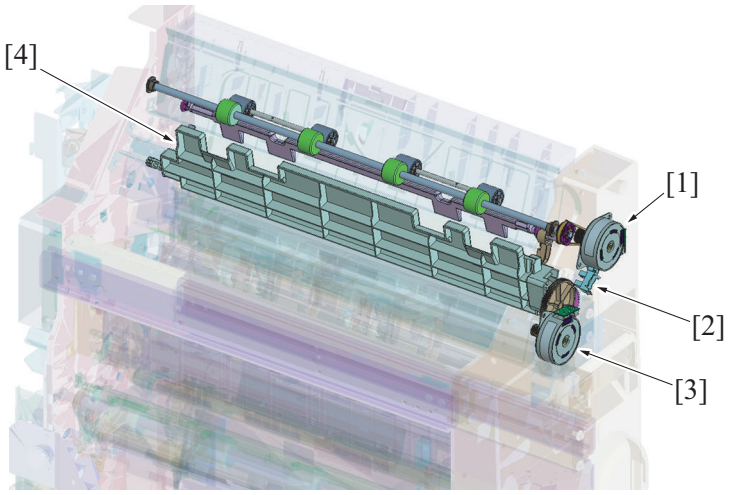


| | | | |
|---|---|---|---|
| [1] | SD transport motor (M1) | [2] | Curl cover detection sensor (PS2) |
| [3] | Paper discharge control motor (M2) | [4] | Curl cover |

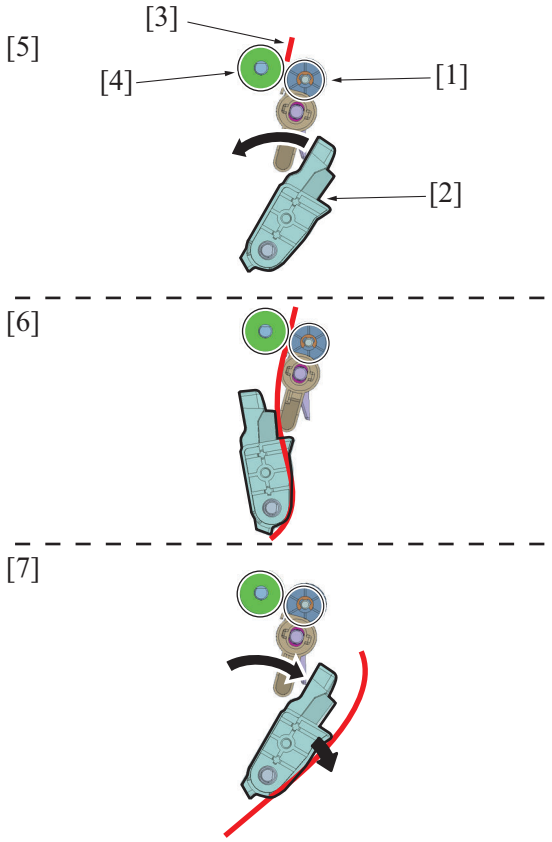


| | | | |
|---|---|---|---|
| [1] | SD transport roll | [2] | Curl cover |
| [3] | Paper | [4] | SD transport roller |
| [5] | Paper transportation from within the finisher | [6] | Curl cover operation |
| [7] | Next paper standby (moves curl cover to the home position) | - | - |

## 11.3 Alignment section

### 11.3.1 Drive

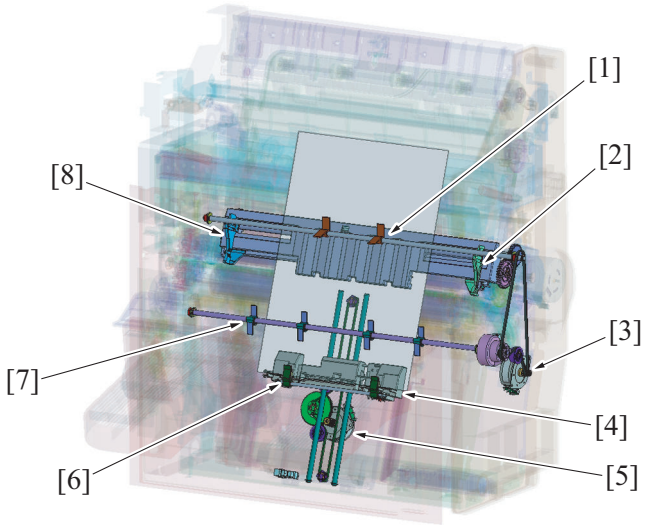


| | | | |
|---|---|---|---|
| [1] | Center folding section upper paddle | [2] | Alignment plate/F |
| [3] | SD paddle motor (M7) | [4] | Stopper guide |
| [5] | Stopper drive motor (M4) | [6] | Paper grip |
| [7] | Center folding section lower paddle | [8] | Alignment plate/R |

### 11.3.2 Alignment

- It aligns the paper transported to the alignment section.
- The paper CD alignment is conducted by alignment plate/F and alignment plate/R. The alignment plate shifts by forward/reverse rotation of the alignment motor to align the paper edge.
- The paper FD alignment is conducted by the stopper guide, center folding section upper paddle and center folding section lower paddle.
- The stopper guide moves up when the stopper drive motor rotates in forward/reverse direction to stop at the position which suits the length of the paper transported. The leading edge of the paper stops by the stopper guide to align the leading edge.
- When the paper is transported, the stopper drive motor rotates in forward/reverse direction to operate the stopper guide drive belt, and moves the stopper guide up/down.
- The center folding section upper paddle and the center folding section lower paddle are installed in order to receive the transported paper to the alignment section without fail.
- The paddle is driven by the SD paddle motor.

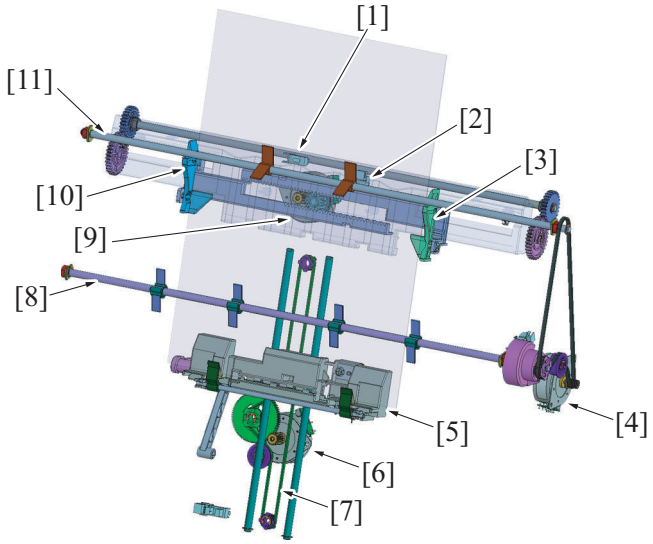


| | | | |
|---|---|---|---|
| [1] | Center staple/fold stacker paper detect sensor (PS3) | [2] | Alignment home sensor (PS4) |
| [3] | Alignment plate/F | [4] | SD paddle motor (M7) |
| [5] | Stopper guide | [6] | Stopper drive motor (M4) |
| [7] | Stopper guide drive belt | [8] | Center folding section lower paddle |
| [9] | Alignment motor (M3) | [10] | Alignment plate/R |
| [11] | Center folding section upper paddle | - | - |

### (1) Alignment operation

- When the saddle exit sensor of the finisher detects the leading edge of the paper, the alignment motor starts rotating in the direction to close the alignment plate, and the alignment plate/F and the alignment plate/R stop at the position where it is slightly wider than the paper width.
- When the specified period of time has passed after the SD entrance sensor detects the trailing edge of the paper, the alignment motor rotates in forward/reverse direction to do oscillation of the alignment plate to align paper.
- The oscillation of the alignment plate is conducted each time a sheet of paper is transported, and the alignment plate is shifted to the standby position after the alignment operation is finished.
- The home position of the alignment plate is detected by the alignment home sensor.

### (2) Stopper guide operation

- The stopper guide is moved up according to the paper size.
- The stopper guide moves up and stops at the specified position after the leading edge of the paper passes the main tray exit sensor.

### (3) Paddle operation

- The up/down paddle is driven by the SD paddle motor. The up/down paddle is driven when the specified period of time has passed after the leading edge of the paper passed the saddle exit sensor of the finisher.
- The up/down paddle stops after the paper trailing edge passes the finisher's main tray exit sensor and the paddle rotates for the specified number of times.

## 11.3.3 Stopper guide

- At the stopper guide, paper is aligned in the FD direction. Paper conveyed to the aligning section is conveyed to the specified position.
- The exit grip holds the paper when shifting it to the specified position and when stapling papers.
- The alignment section, staple position and other positions (center folding, saddle folding, tri-folding) have their own up/down stop positions. They are controlled by the pulse number of the stopper drive motor.

### (1) Stopper operation

- The stopper drive motor moves the stopper guide up and down in accordance with the paper size. The stopper home sensor detects the home position.

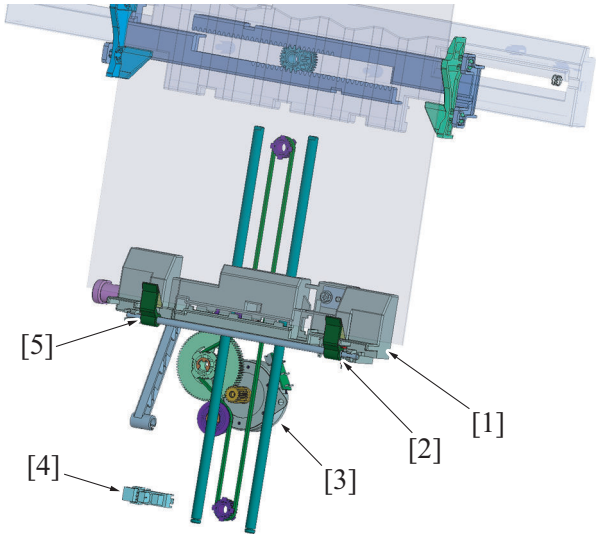


| | | | |
|---|---|---|---|
| [1] | Stopper guide | [2] | Exit grip/Fr |
| [3] | Stopper drive motor (M4) | [4] | Stopper home sensor (PS6) |
| [5] | Exit grip/Rr | - | - |

### (2) Stopper control

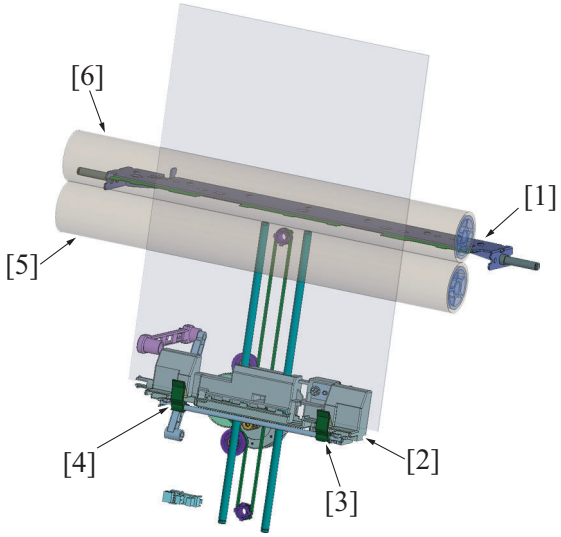


| | | | |
|---|---|---|---|
| [1] | Center folding knife assy | [2] | Stopper guide |
| [3] | Exit grip/Fr | [4] | Exit grip/Rr |
| [5] | Center folding roller/2 | [6] | Center folding roller/1 |

#### (a) Folding mode

- After a specified period of time since the last sheet of paper was aligned, the stopper solenoid is turned ON and the sheets of paper are held in place.
- After the sheets are held in place, the stopper drive motor rotates to move the stopper guide down and lower the sheets to the folding position.

#### (b) Saddle stitching mode

- After a specified period of time since the last sheet of paper was aligned, the stopper solenoid is turned ON and the sheets of paper are held in place.
- After the sheets are held in place, the stopper drive motor rotates to move the stopper guide down and lower the sheets to the saddle stitching position.
- After a specified period of time since stapling operation was completed, the alignment motor opens the alignment plates and the stopper drive motor starts rotating to move the stopper guide further down and lower the paper to the folding position.

#### (c) Tri-folding mode

- After a specified period of time since the last sheet of paper was aligned, the stopper solenoid is turned ON and the sheets of paper are held in place.
- After the sheets are held in place, the stopper drive motor rotates to move the stopper guide down and lower the sheets to the 1st folding position in the tri-folding.

## 11.4 Stapler

### 11.4.1 Drive

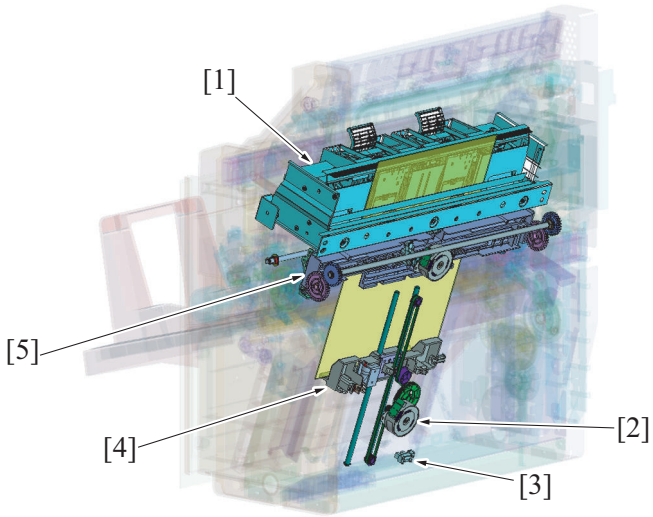


| | | | |
|---|---|---|---|
| [1] | Stapler unit | [2] | Stopper drive motor (M4) |

| | | | |
|---|---|---|---|
| [3] | Stopper home sensor (PS6) | [4] | Stopper guide |
| [5] | Alignment tray | - | - |

### 11.4.2 Operation

- The stapling operation is performed by the stapler motor.

#### (1) Stapling operation

- The stapling operation is performed by the staple motor in the stapler.
- The drive gear pushes out the pressed portion of the paper toward the clincher to hold the paper, and then the pin will be pushed out.
- When the pin penetrates the paper batch, the pin will be bent to staple the paper batch at the clincher section.

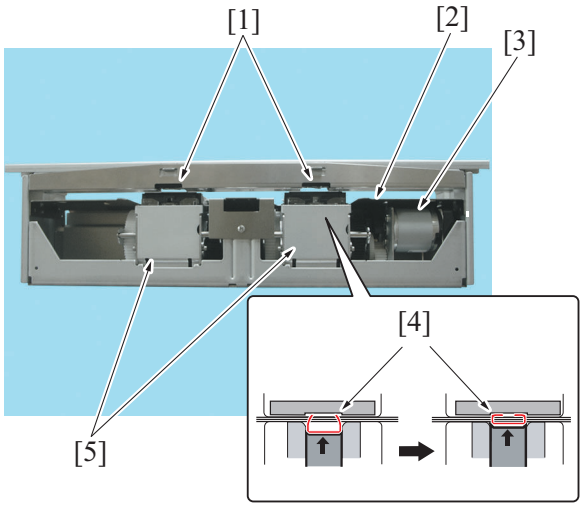


| | | | |
|---|---|---|---|
| [1] | Clincher | [2] | Drive gear |
| [3] | Stapler motor | [4] | Staple |
| [5] | Stapler | - | - |

#### (2) Staple control

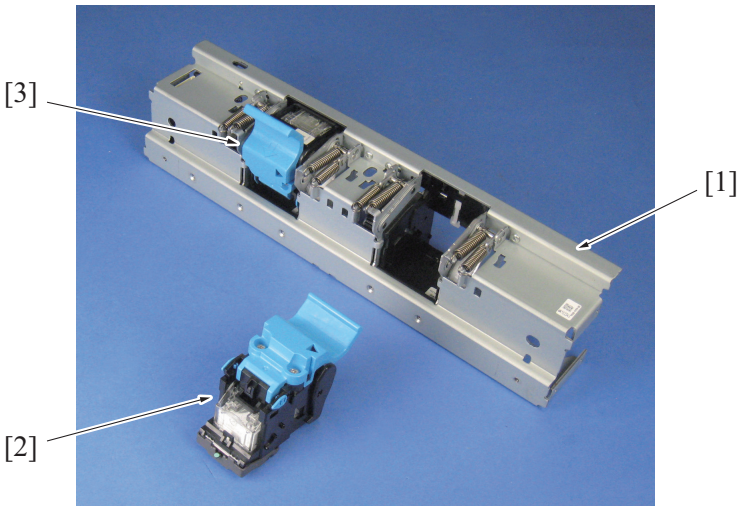


| | | | |
|---|---|---|---|
| [1] | Staple unit | [2] | Staple cartridge (Front side): Removed |
| [3] | Staple cartridge (Rear side): Installed | - | - |

##### (a) Stapling

- After completing the alignment operation of the alignment plate, the staple motor performs the stapling operation.
- The stapling operation is completed when the stapler home position sensor (rear) detects the home position and turn ON.

##### (b) Clogged staple detection

- When the stapler home position sensor (rear) does not turn ON after the specified period of time after it turned OFF during stapling, it is determined that the staple motor has the trouble, and stops the stapler motor.

##### (c) Staple cartridge detection

- The staple cartridge switch detects the presence of a cartridge or the incorrect settings of a staple cartridge.

- When no staple cartridge is installed or it is installed incorrectly, an error message appears on the machine control panel.

**(d) Staple detection control**

- When the staple goes empty, the staple empty switch turns ON and a message appears on the machine control panel.

## 11.5 Folding/Saddle stitching

### 11.5.1 Drive

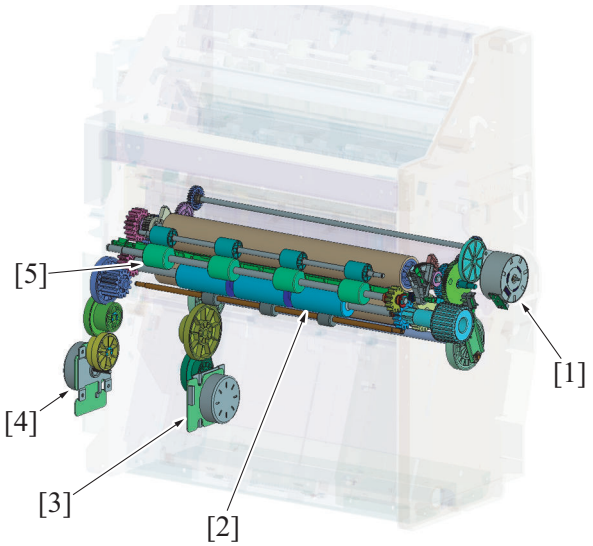


| | | | |
|---|---|---|---|
| [1] | Tri-folding guide motor (M6) | [2] | Tri-folding roller |
| [3] | Center fold knife motor (M9) | [4] | Center fold roller motor (M5) |
| [5] | Saddle section exit roller | - | - |

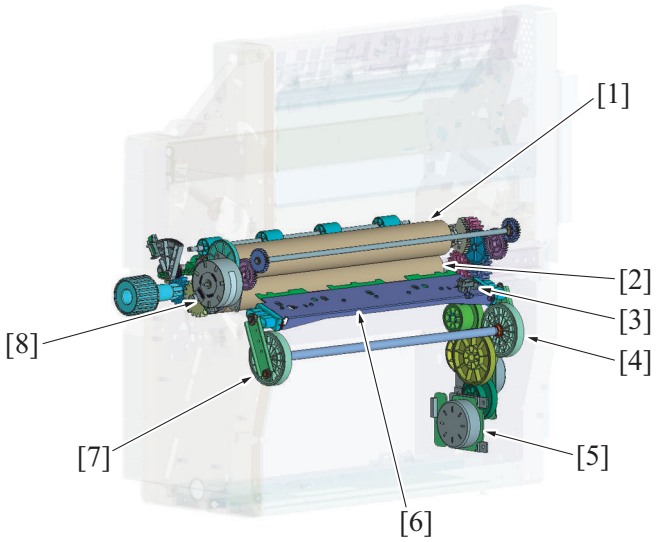


| | | | |
|---|---|---|---|
| [1] | Center folding roller/1 | [2] | Center folding roller/2 |
| [3] | Center fold knife home sensor (PS8) | [4] | Fold drive gear/Rr |
| [5] | Center fold knife motor (M9) | [6] | Center folding knife assy |
| [7] | Fold drive gear/Fr | [8] | Tri-folding guide motor (M6) |

### 11.5.2 Folding knife

- The center fold knife motor drives the folding knife.
- The folding knife is used in the folding/saddle stitching/tri-folding mode.
- In the tri-folding mode, it is used at the 1st folding.

### (1) Folding knife operation

- The center fold knife motor rotates the crank shaft a half turn via the gear, and pushes the paper to the nip section with the folding knife.
- The folding rollers draw and fold the paper.
- The position of the stopper guide controls the folding position.

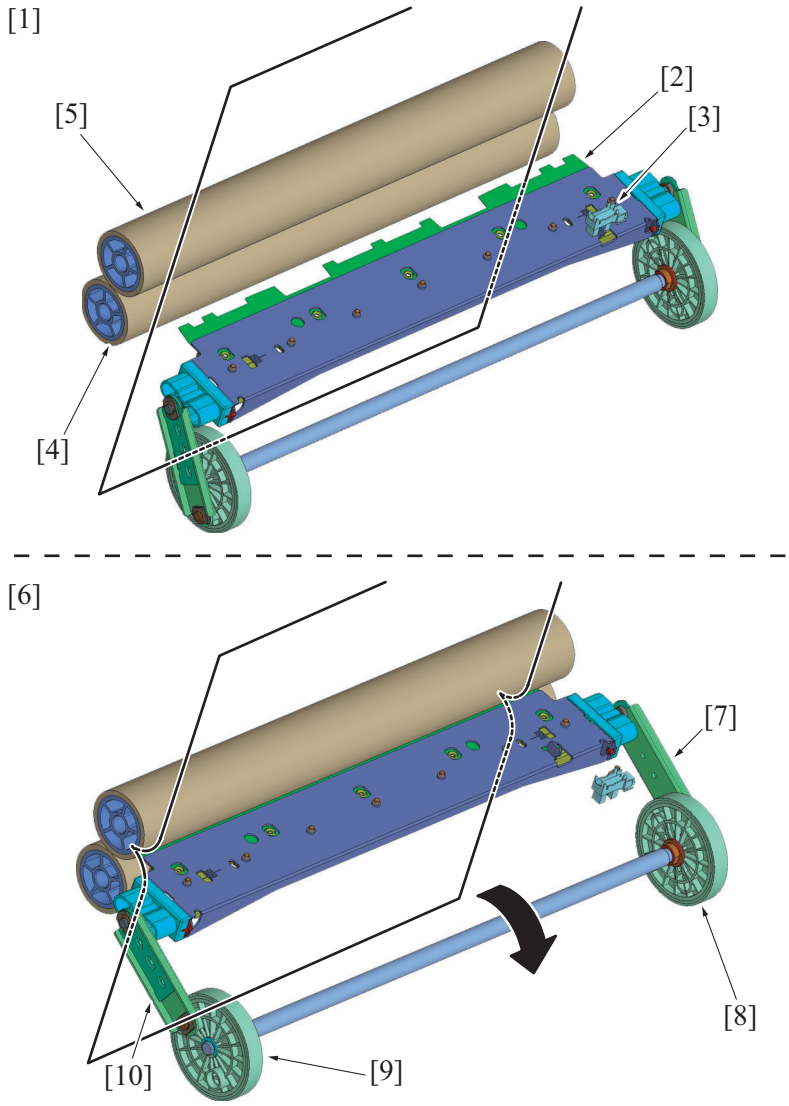


| | | | |
|---|---|---|---|
| [1] | Before folding | [2] | Folding knife |
| [3] | Center fold knife home sensor (PS8) | [4] | Center folding roller/2 |
| [5] | Center folding roller/1 | [6] | Folding operation |
| [7] | Crank shaft/Rr | [8] | Fold knife assy drive gear/Rr |
| [9] | Fold knife assy drive gear/Fr | [10] | Crank shaft/Fr |

**(2) Folding knife control**

- The center fold knife motor turns ON and sticks out the folding knife to the paper after a specified period of time since the stopper guide stops at the folding position.
- The center fold knife motor stops when the folding knife reciprocates after fold operation is completed and the center fold knife home sensor turns OFF.

## 11.6 Tri-folding

### 11.6.1 Drive

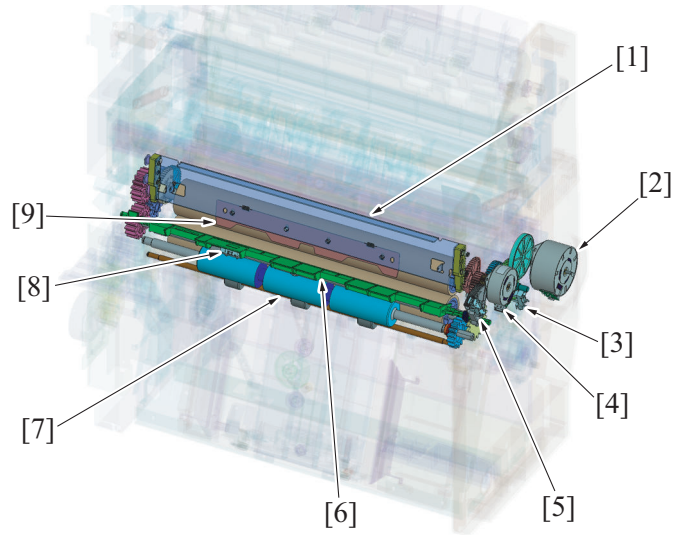


| | | | |
|---|---|---|---|
| [1] | Tri-folding knife assy | [2] | Center fold guide motor (M8) |
| [3] | Guide home sensor (PS7) | [4] | Tri-fold guide motor (M6) |
| [5] | Tri-folding gate home sensor (PS11) | [6] | Center folding change gate |
| [7] | Tri-folding roller | [8] | Fold exit sensor (PS12) |
| [9] | Tri-folding knife | - | - |

### 11.6.2 Tri-folding operation

1. When the center fold guide motor drives, the tri-folding gate rotates. The leading edge of the paper to which the first fold was applied at the center folding section, will be transported to the tri-folding path.
2. When the tri-folding guide motor drives, the tri-folding knife assy drive gear rotates to move down the tri-folding knife assy. The paper to which the first fold is applied at the center folding section will be pushed out to the tri-folding roller.
3. The paper is pulled into the tri-folding roller to tri-fold the paper.
4. When tri-folding is finished, the tri-folding gate will return to the home position. The home position of the tri-folding gate is detected by the tri-folding gate home sensor.

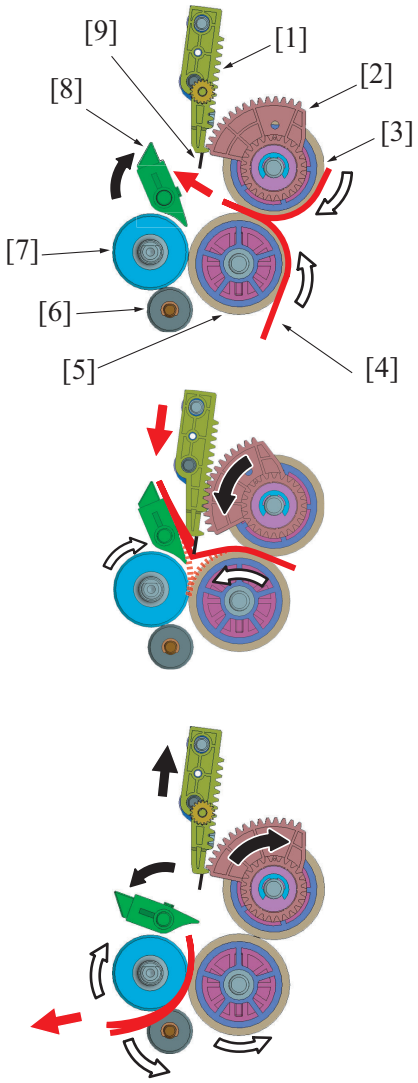


| | | | |
|---|---|---|---|
| [1] | Tri-folding knife assy | [2] | Tri-folding knife assy drive gear |
| [3] | Center folding roller/1 | [4] | Paper |
| [5] | Center folding roller/2 | [6] | Tri-folding roll |
| [7] | Tri-folding roller | [8] | Tri-folding gate |
| [9] | Tri-folding knife | - | - |

## 11.7 Exit section

### 11.7.1 Drive

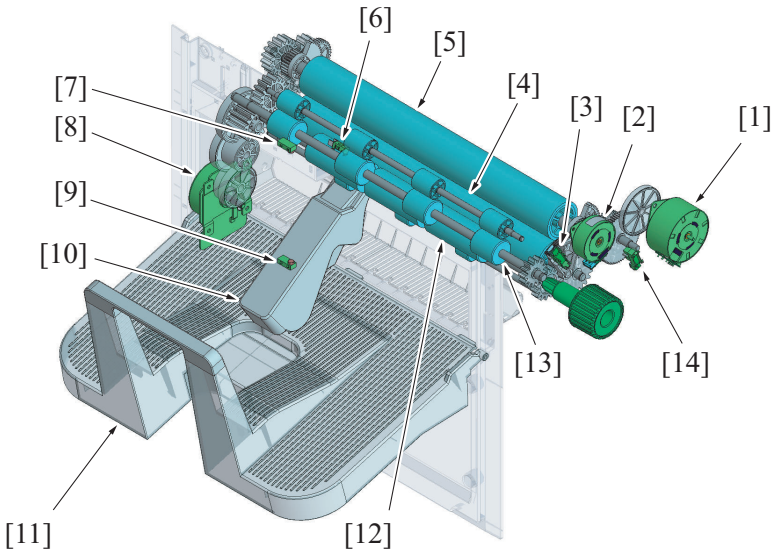

| | | | |
|---|---|---|---|
| [1] | Center fold guide motor (M8) | [2] | Tri-fold guide motor (M6) |
| [3] | Tri-folding gate home sensor (PS11) | [4] | Center folding roller/2 |
| [5] | Center folding roller/1 | [6] | Fold exit sensor (PS12) |
| [7] | Booklet tray empty detection sensor/in (PS13) | [8] | Center fold roller motor (M5) |
| [9] | Booklet tray empty detection sensor/out (PS14) | [10] | Paper press |
| [11] | Saddle tray | [12] | Tri-folding roller |
| [13] | Saddle section exit roller | [14] | Guide home sensor (PS7) |

### 11.7.2 Paper exit

- Center folded, saddle stitched, or tri-folded paper is discharged to the saddle tray.
- The paper that is center folded and saddle folded is sent though the upper route, and the tri-folded paper is sent through the lower route to be discharged.
- The paper is discharged by driving the exit roller and the tri-fold roller. Both rollers are driven by the center fold roller motor.

#### (1) Paper exit for center fold / saddle stitch

- The center fold roller motor is driven after the center fold or the saddle stitch, and discharges the paper to the saddle tray by the paper exit roller.

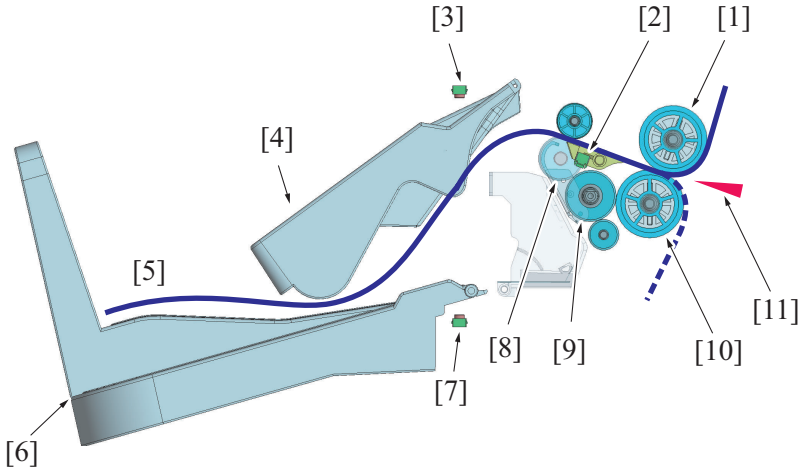


A3EPEPGC607AA

| | | | |
|---|---|---|---|
| [1] | Center folding roller/1 | [2] | Fold exit sensor (PS12) |
| [3] | Booklet tray empty detection sensor/in (PS13) | [4] | Paper press |
| [5] | Paper transport route | [6] | Saddle tray |
| [7] | Booklet tray empty detection sensor/out (PS14) | [8] | Saddle section exit roller |
| [9] | Tri-folding roller | [10] | Center folding roller/2 |
| [11] | Folding knife | - | - |

#### (2) Paper exit for tri-folding

- Since the paper is tri-folded by the tri-folding roller, the paper is transported through the lower route.

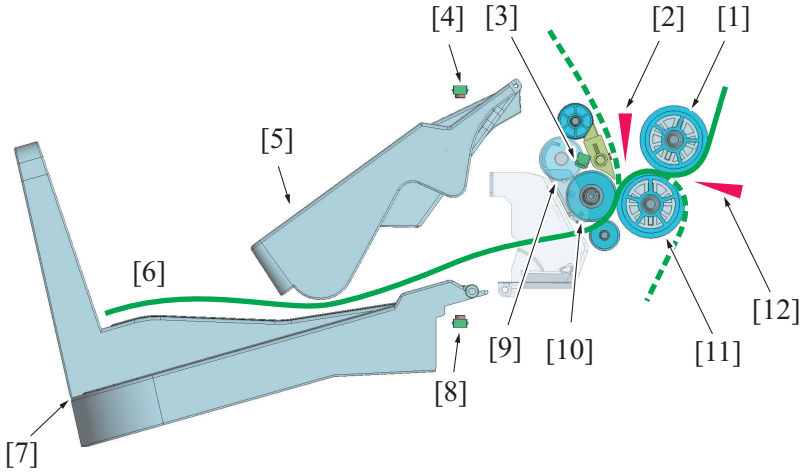


| | | | |
|---|---|---|---|
| [1] | Center folding roller/1 | [2] | Tri-folding knife |
| [3] | Fold exit sensor (PS12) | [4] | Booklet tray empty detection sensor/in (PS13) |
| [5] | Paper press | [6] | Paper transport route |
| [7] | Saddle tray | [8] | Booklet tray empty detection sensor/out (PS14) |

| | | | |
|---|---|---|---|
| [9] | Saddle section exit roller | [10] | Tri-folding roller |
| [11] | Center folding roller/2 | [12] | Folding knife |

# PI THEORY OF OPERATION AU-102/AU-201S

## 1. AU-102

### 1.1 Configuration

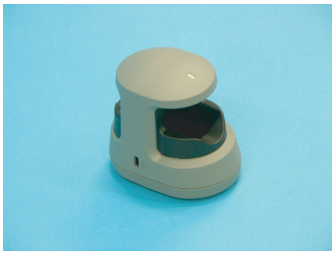

[1]

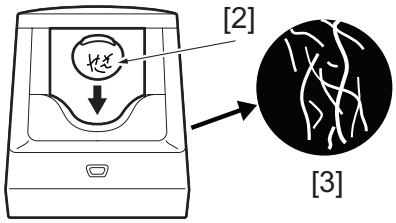


| | | | |
|---|---|---|---|
| [1] | Authentication unit (AU-102) | [2] | Finger |
| [3] | Vein image | - | - |

### 1.2 Operation

- A finger vein pattern is used for personal identification.
- Vein patterns are inside the body and cannot be visually recognized. This makes vein patterns extremely difficult to forge or falsify. The vein pattern authentication system can provide high security.
- With ultra-red LED radiation, a finger vein pattern is captured by camera and its image is created. The vein pattern image is registered and a person can be identified if the person's vein pattern matches the registered one at the time of user authentication.

# 2. AU-201S

## 2.1 Configuration

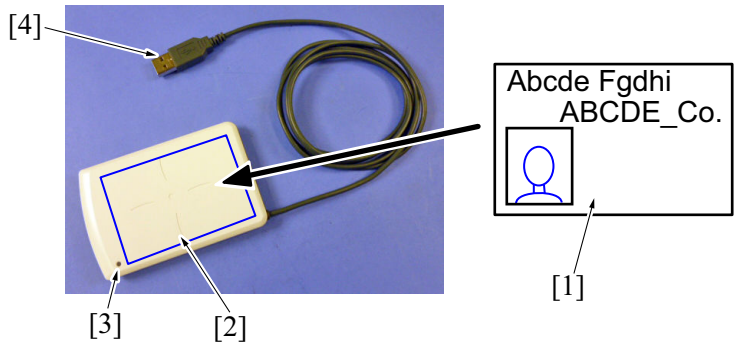


| | | | |
|---|---|---|---|
| [1] | Non-contact IC card | [2] | Read-write area |
| [3] | Status LED | [4] | USB connector (Type-A) |

- Use the Local Interface Kit EK-608 and the Installation Kit MK-735 to attach the authentication device inside the main unit.

## 2.2 Operation

- Place the non-contact IC card on the authentication device to read and write data.
- Displays the operational status via LEDs on the unit.
  - Yellow-green light glows: Normal operation.
  - Red light or orange light is on: Unit is experiencing an issue.

## 2.3 Specifications

| | | | |
|---|---|---|---|
| Communication Type | TypeA/Mifare | TypeB | FeliCa |
| Communication Speed | 106 kbps | 106 kbps, 212 kbps, 424 kbps | 212 kbps, 424 kbps |
| Authentication Function | Mifare Crypt | - | DES, AES |
| Compatible IC cards | • Non-contact IC cards compliant with ISO14443 Type A<br>• Non-contact IC cards compliant with TN2 (SEE55R) | Non-contact IC cards compliant with ISO14443 Type B | FeliCa card |
| Inter-terminal Communication | Inter-terminal communication compliant with ISO18092 (communication speed: 106, 212, and 424 kbps) | | |

# PJ THEORY OF OPERATION EK-608/EK-609/SC-508

## 1. EK-608

### 1.1 Configuration

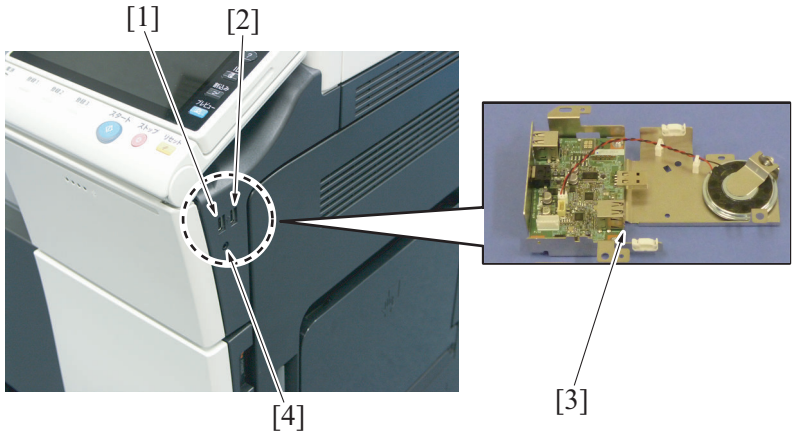


| | | | |
|---|---|---|---|
| [1] | USB terminal (extension) | [2] | USB terminal (standard) |
| [3] | Local Interface Kit EK-608 | [4] | Voice guidance output terminal |

### 1.2 Operation

- The document can be printed directly from, or saved in, the USB memory.
- Connecting the USB keyboard (dealer option: overseas market only) will permit keyboard input.
- To use the voice guidance function, i-Option LK-104 v3 and Upgrade Kit UK-211 are required.

# 2. EK-609

## 2.1 Configuration

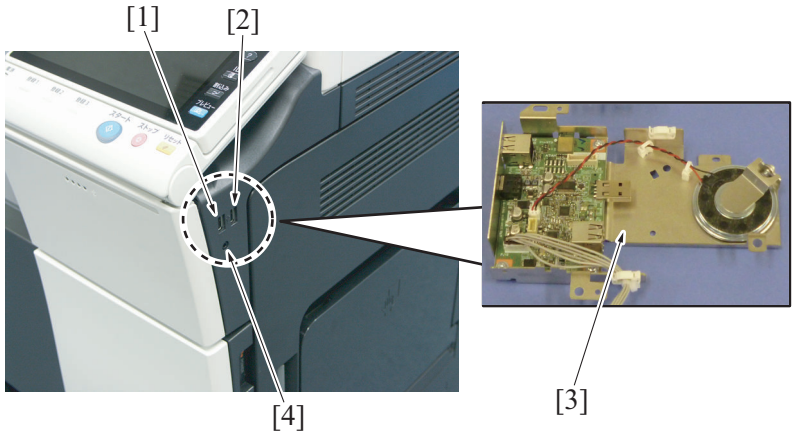


| | | | |
|---|---|---|---|
| [1] | USB terminal (extension) | [2] | USB terminal (standard) |
| [3] | Local Interface Kit EK-609 | [4] | Voice guidance output terminal |

## 2.2 Operation

- The document can be printed directly from, or saved in, the USB memory.
- Connecting the USB keyboard (dealer option: overseas market only) will permit keyboard input.
- The local interface kit is mounted when the voice guidance function, and functions interacting with the portable phone or PDA (portable data terminal), compatible with Bluetooth, are to be used. It has a built-in speaker and Bluetooth communication receiver.
- To use the voice guidance function, i-Option LK-104 v3 and Upgrade Kit UK-211 are required.
- Using Bluetooth, the user can print files directly from the portable phone, download and print PDFs or other files from the portable phone, or save them in a box.
- If an XHTML file is downloaded from the portable phone, an image file can be downloaded from the URL described in XHTML, and printed as an image onto a location specified in the XHTML document.




| | | | |
|---|---|---|---|
| [1] | Portable phone, PDA | [2] | Local Interface Kit EK-609 |

# 3. SC-508

## 3.1 Configuration

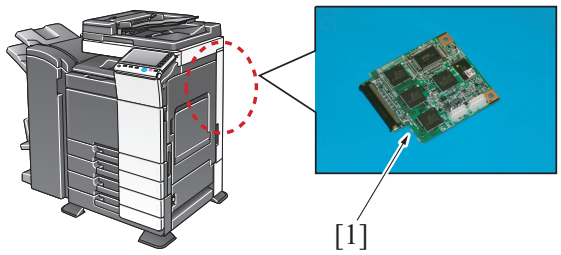


| | | | |
|---|---|---|---|
| [1] | Security Kit SC-508 * | - | - |

- *: When DF-704 is mounted, it is necessary to install two security kits to the machine for each front side scanning and back side scanning.

## 3.2 Operation

- The security kit offers the copy guard (copy prohibited) and password copy functions in addition to the conventional copy protect function. The copy guard security pattern or password copy security pattern printed on the original, is detected to thereby prevent unauthorized copies from being produced.
- The copy guard security pattern and password copy security pattern can be detected only by the Konica Minolta machine mounted with the copy guard and password copy functions.

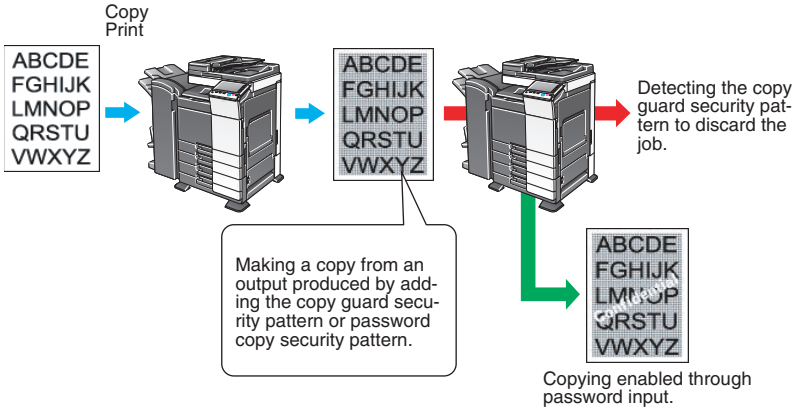

# PK THEORY OF OPERATION UK-212

## 1. CONFIGURATION

### 1.1 Mounting position

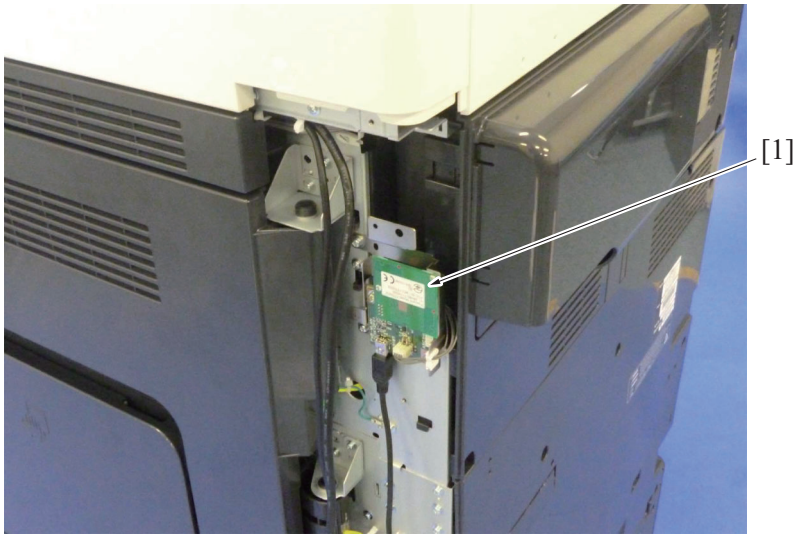


| | | | |
|---|---|---|---|
| [1] | Upgrade kit (UK-212) | - | - |

# 2. OPERATION

## 2.1 Outline

When the Upgrade kit UK-212 is installed, the following functions can be added.

- By connecting the MFP main unit as a wireless LAN adapter to a wireless LAN access point connected to the LAN environment, a job can be executed. The MFP main unit can be connected to both a wireless LAN environment and a LAN environment. (Wireless Only, Wired +Wireless (Secondary Mode))
- Direct communication between the MFP main unit and the mobile terminal (Android terminal, iOS terminal or Wi-Fi support devices) will be enabled. (Wired+Wireless (Primary Mode)*, Wired+Wireless (Wi-Fi Direct))
- Even when the MFP main unit is on standby state in "ErP Auto Power Off mode", the MFP main unit can be started from a client to execute a job.

Basic concept of connection

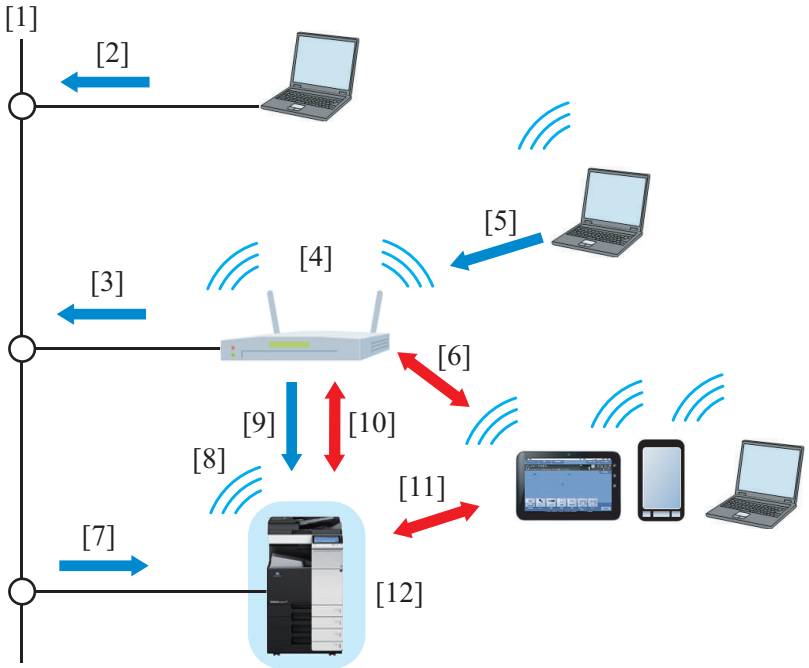


| | | | |
|---|---|---|---|
| [1] | LAN environment | [2] | Job received from a PC connected to the LAN environment |
| [3] | Job received via the wireless LAN access point | [4] | Wireless LAN access point connected to the LAN environment |
| [5] | Job received from a PC connected to the wireless LAN environment | [6] | Communication with a mobile terminal connected to the wireless LAN environment*1 |
| [7] | Job received from the MFP main unit via the LAN | [8] | • Communication with the wireless LAN access point (Wireless Only, Wired+Wireless (Secondary Mode))<br>• Enabled communication with a mobile terminal (Wired + Wireless (Primary Mode)*, Wired + Wireless (Wi-Fi Direct)) |
| [9] | Job received from the MFP main unit via the wireless LAN | [10] | Communication via the wireless LAN access point connected to a mobile terminal (Android terminal, iOS terminal or Wi-Fi support devices) |
| [11] | Direct communication with a mobile terminal (Wired + Wireless (Primary Mode)*, Wired + Wireless (Wi-Fi Direct)) | [12] | Machine (on startup) |

**NOTE**

- **To use UK-212, the following settings are required.**
  **[Service Mode] -> [Network Settings] -> [2nd Network Setting]**
- **The "Interface structure" includes the following five patterns. These patterns can be selected depending on the connection environment of the MFP main unit.**
  **[Service Mode] -> [Network Settings] -> [2nd Network Setting]- > [Network Interface Settings]**

| No. | Network Interface Settings | Connection environment of MFP main unit |
|---|---|---|
| 1 | Wired Only | Use when the MFP main unit is connected only to a LAN environment. |
| 2 | Wireless Only | Use when the MFP main unit is connected only to a wireless LAN environment. |
| 3 | Wired+Wireless (Secondary Mode) | Use when the MFP main unit is connected to both a LAN environment and a wireless LAN environment. |
| 4 | Wired+Wireless (Primary Mode) * | • Use when the MFP main unit is connected to both a LAN environment and a wireless LAN environment.<br>• The MFP main unit is used as a wireless LAN access point (Primary Mode). |
| 5 | Wired+Wireless (Wi-Fi Direct) | • Use when the MFP main unit is connected to both a LAN environment and a wireless LAN environment.<br>• The MFP main unit is used as a wireless LAN access point.<br>• With this mode, a mobile terminal (excluding iOS) can be connected to Wi-Fi Direct authentication devices easily. |

- **For details of the structure of the MFP interface, see PK.2.2.1 Wired Only, PK.2.2.2 Wireless Only, PK.2.2.3 Wired+Wireless (Secondary Mode), PK.2.2.4 Wired+Wireless (Primary Mode), PK.2.2.5 Wired+Wireless (Wi-Fi Direct).**

## 2.2 2nd network interface structure

### 2.2.1 Wired Only

- The MFP main unit is used only when being connected to the LAN environment. (Initial setting)
- The LAN line is the main line.

#### (1) Operation

- To execute a job received from a client via the LAN.

Basic concept of connection

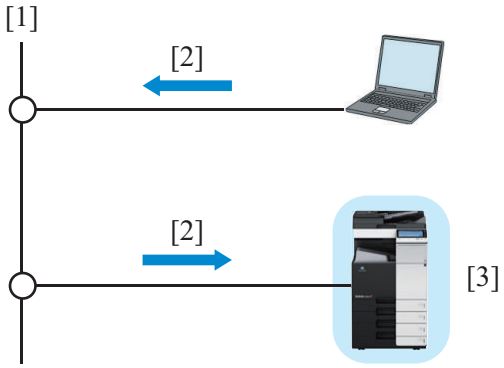


| | | | |
|---|---|---|---|
| [1] | LAN environment | [2] | Job |
| [3] | MFP main unit (on startup) | - | - |

### 2.2.2 Wireless Only

- Use when the MFP main unit is connected only to a wireless LAN environment.
- The wireless LAN line is the main line.

#### (1) Operation

- To execute a job received from a client via the wireless LAN access point.
  - To execute a job received from a PC connected to the LAN.
  - To execute a job received from a PC connected to the wireless LAN.
  - To execute a job received from an Android terminal or iOS terminal (called mobile terminal hereafter) connected to the wireless LAN.

**NOTE**

- **A wireless communication is performed between the MFP main unit and a client via the wireless LAN access point.**

Basic concept of connection

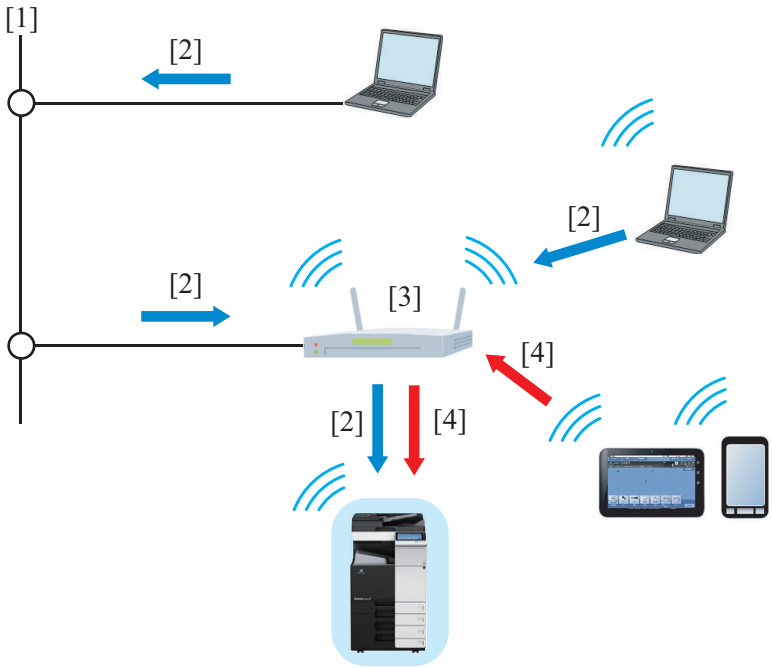


| | | | |
|---|---|---|---|
| [1] | LAN environment | [2] | Job received from a PC |
| [3] | Wireless LAN access point | [4] | Job received from a mobile terminal |

### 2.2.3 Wired+Wireless (Secondary Mode)

- Use when the MFP main unit is connected to both a LAN environment and a wireless LAN environment.

- The LAN line is the main line, and the wireless LAN line is the sub line.

### (1) Operation

- To execute a job received from a client via the LAN.
  - To execute a job received from a PC connected to the LAN.
  - To execute a job received from a PC connected to the wireless LAN.
  - To execute a job received from an Android terminal or iOS terminal (called mobile terminal hereafter) connected to the wireless LAN.
- To execute a job from a client via the wireless LAN access point.
  - To execute a job received from a PC connected to the LAN.
  - To execute a job received from a PC connected to the wireless LAN.
  - To execute a job received from an Android terminal or iOS terminal (called mobile terminal hereafter) connected to the wireless LAN.

**NOTE**

- **A communication is performed between the MFP main unit and the mobile terminal via the LAN and wireless LAN access point.**

Basic concept of connection

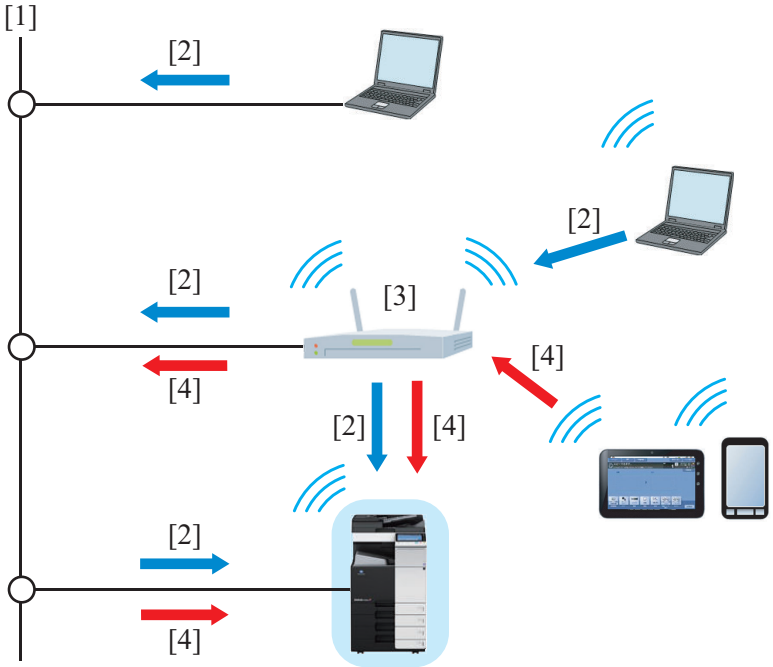


| | | | |
|---|---|---|---|
| [1] | LAN environment | [2] | Job received from a PC |
| [3] | Wireless LAN access point | [4] | Job received from a mobile terminal |

## 2.2.4 Wired+Wireless (Primary Mode)

- The function is to be soon mounted.
- Use when the MFP main unit is connected to both a LAN environment and a wireless LAN environment.
- The LAN line is the main line, and the wireless LAN line is the sub line.
- The MFP main unit is used as a wireless LAN access point.
- When starting up the MFP main unit, perform wireless LAN communication between the MFP main unit and the mobile terminal (Android terminal, iOS terminal, or devices supporting Wi-Fi) without via wireless LAN access point.

### (1) Operation

- To execute a job received from a client via the LAN.
  - To execute a job received from a PC connected to the LAN.
  - To execute a job received from a PC connected to the wireless LAN.
- To execute a job received from a mobile terminal through a wireless communication.

Basic concept of connection

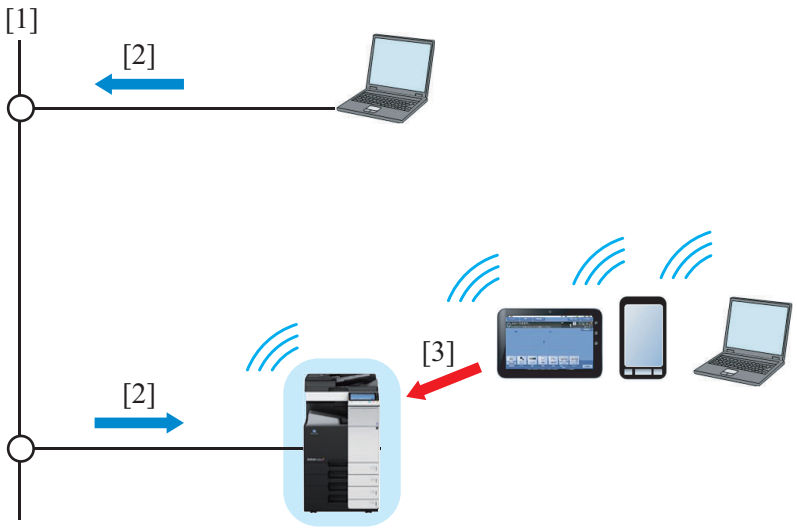


| | | | |
|---|---|---|---|
| [1] | LAN environment | [2] | Job received from a PC |
| [3] | Job received from a mobile terminal | - | - |

### 2.2.5 Wired+Wireless (Wi-Fi Direct)

- This mode performs same control as that with Wired+Wireless (Primary Mode).
- When connected to devices supporting Wi-Fi Direct authentication, connection without settings of SSID and password is enabled.

## 2.3 Operation on ErP Auto Power Off mode

- On ErP Auto Power Off mode, the sub power supply turns off, so that the power consumption is controlled. Touching the power key to start the MFP main unit.
- When the MFP main unit on which UK-212 is not installed, is switched to ErP Auto Power Off mode, the operations such as receiving data, receiving fax, reading original, printing and so on cannot be executed.
- When UK-212 is installed, ErP Auto Power Off mode can be released remotely (by starting up the MFP main unit).
  [Utility] -> [Administrator Settings] -> [Network Settings] -> [Wireless Network Setting]

Diagram of standby state in "ErP Auto Off mode" of the MFP main unit

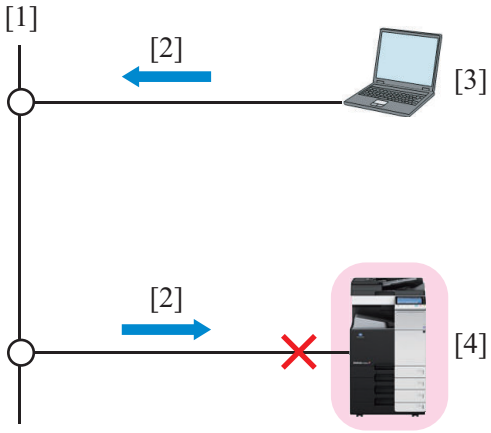


| | | | |
|---|---|---|---|
| [1] | LAN environment | [2] | Print job |
| [3] | Client (PC) | [4] | Machine (on standby in ErP Auto Power Off mode) |

### 2.3.1 Wired + Wireless (Secondary Mode)

**NOTE**

- **To awake from the ErP Auto Power Off mode, select [Awake with ARP + Unicast Communication].**

1. The MFP main unit waits for a startup indication sent via the wireless LAN communication.
2. Receiving a startup indication from a client via the wireless LAN communication without via the wireless LAN access point to start up the MFP main unit.
   - Receiving a startup indication from a PC to start up the MFP main unit.
   - Receiving a communication from a mobile terminal to start up the MFP main unit.

Diagram of startup operation

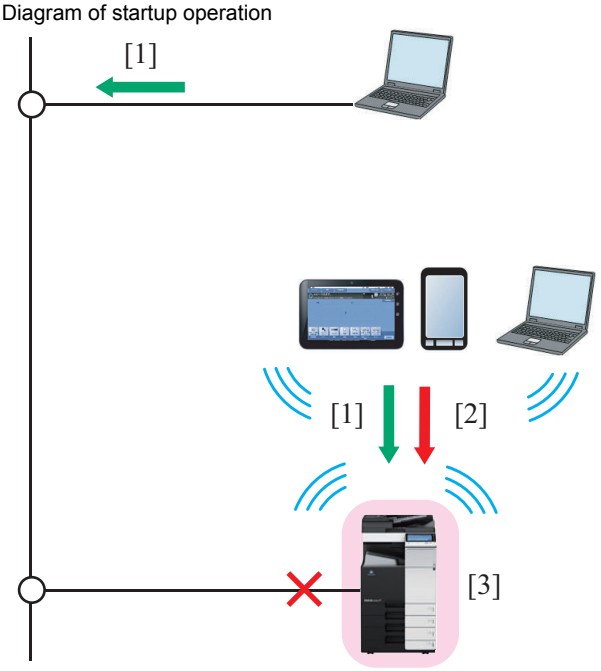


| | | | |
|---|---|---|---|
| [1] | Startup indication *1 | [2] | Job received from a mobile terminal |
| [3] | MFP main unit (on startup) | - | - |

- *1: To execute a print job, [Wake-On-Lan setting] is required to be configured at [Initial settings] of a printer driver.

3. After starting up the MFP main unit, execute a job received from a client.
   - Execute a job received from a PC via the LAN.
   - Execute a job received from a PC via the wireless LAN communication.
   - Execute a job received from a mobile terminal via the wireless LAN communication.

Diagram of operation after startup

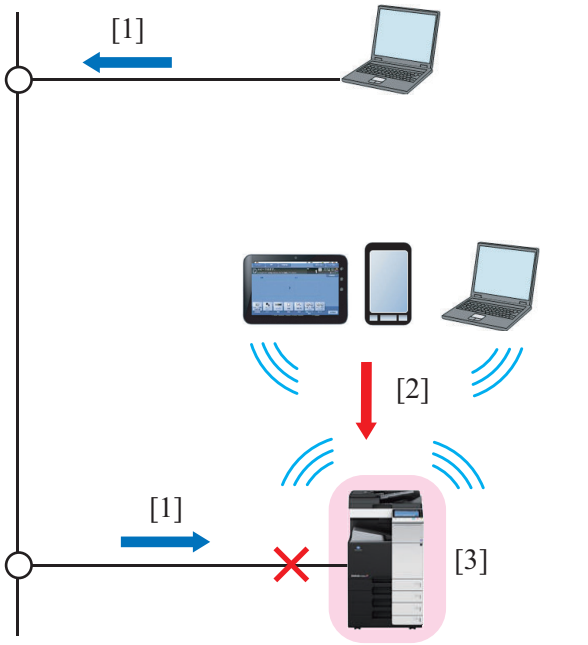


| | | | |
|---|---|---|---|
| [1] | Job received from a PC | [2] | Job received from a mobile terminal |
| [3] | MFP main body (after startup) | - | - |

### 2.3.2 Wired + Wireless (Primary Mode), Wired + Wireless (Wi-Fi Direct)

**NOTE**

- **To awake from the ErP Auto Power Off mode, select [Awake with ARP + Unicast Communication].**

1. The MFP main unit waits for a startup indication sent via the wireless LAN communication.
2. Receiving a startup indication from a client via the wireless LAN communication without via the wireless LAN access point to start up the MFP main unit.
   - Receiving a startup indication from a PC to start up the MFP main unit.
   - Receiving a communication from a mobile terminal to start up the MFP main unit.

Diagram of startup operation

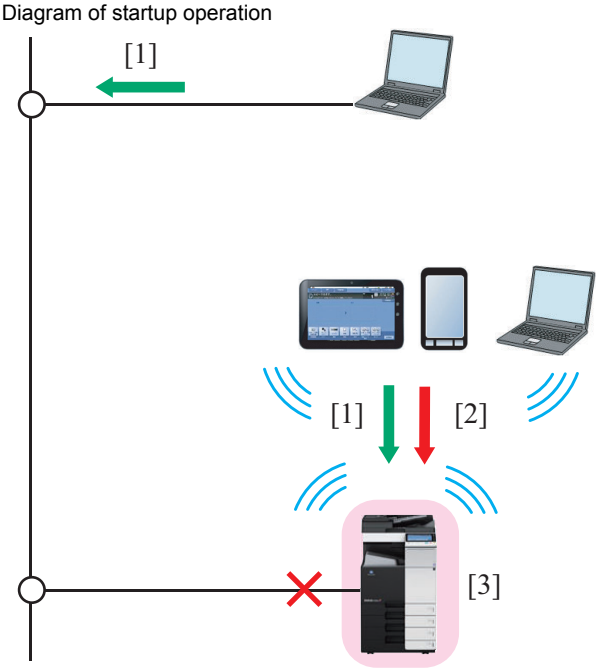


| | | | |
|---|---|---|---|
| [1] | Startup indication *1 | [2] | Job received from a mobile terminal |
| [3] | MFP main unit (on startup) | - | - |

- *1: To execute a print job, [Wake-On-Lan setting] is required to be configured at [Initial settings] of a printer driver.

3. After starting up the MFP main unit, execute a job received from a client.
   - Execute a job received from a PC via the LAN.
   - Execute a job received from a mobile terminal through a direct wireless LAN communication.

Diagram of operation after starting up the MFP main unit

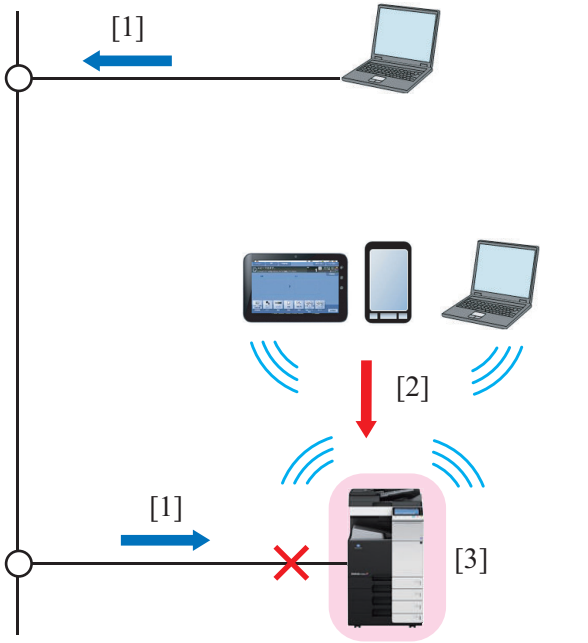


| | | | |
|---|---|---|---|
| [1] | Job received from a PC | [2] | Job received from a mobile terminal |
| [3] | MFP main unit (on startup) | - | - |

- After starting up the MFP main unit, the wireless LAN communication between the MFP main unit and the wireless LAN access point will be completed.

### 2.3.3 Setting for printer driver

- To execute a print job, property setting is required for the printer driver to start up the MFP main unit from ErP Auto Power Off mode.

#### (1) Setting procedure

1. Open the property window of the printer.

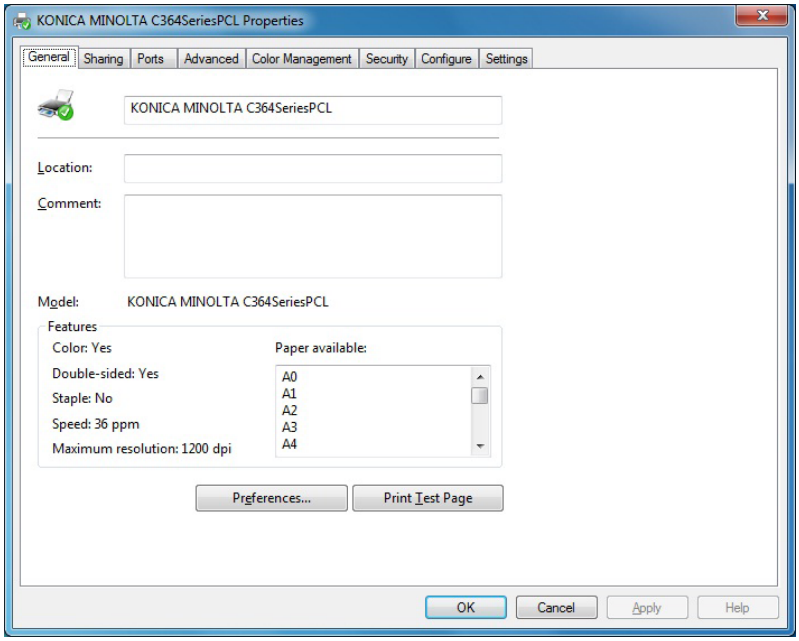


2. Select the [Initial settings] tab, and select [Wake-On-Lan setting].

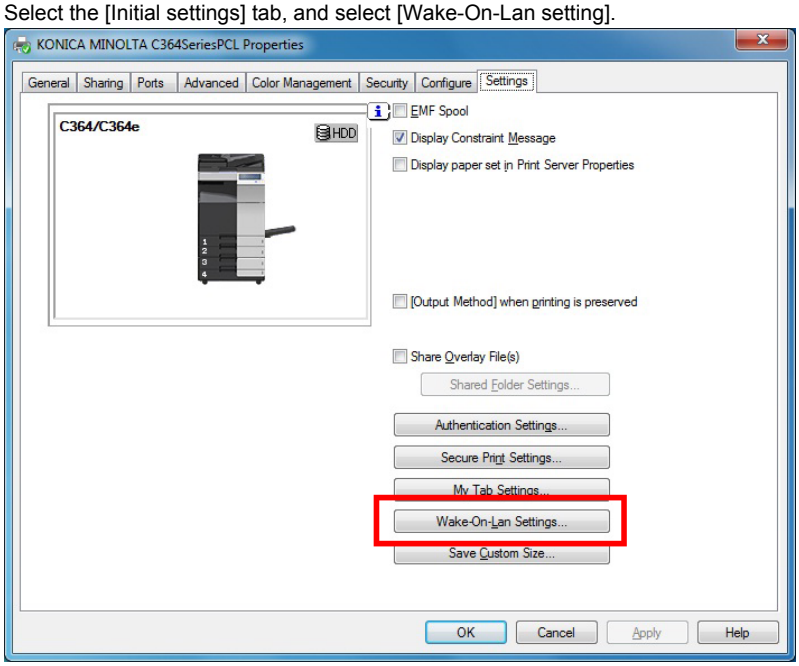


3. Select the [Awake before print from Power Saving Mode] check box.

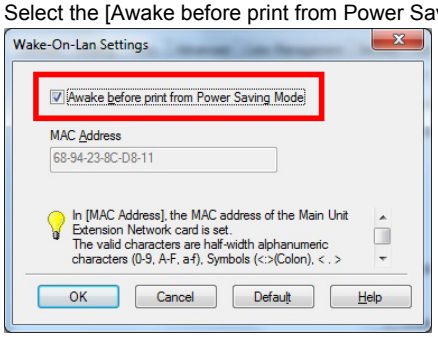

# PL THEORY OF OPERATION FK-514/FK-515/MK-742

## 1. COMMUNICATION CONTROL

### 1.1 FIF bits of DIS, DTC and DCS

**NOTE**

- **Considered to be A4 width when the DIS recording paper width is invalid (1, 1).**
  **Becomes a FIF error when the DCS recording paper width is invalid (1, 1).**
- **Considered to be unlimited when the DIS recording paper length is invalid (1, 1).**
  **Considered to be unlimited when the DCS recording paper length is invalid (1, 1).**
  **The DCS recording paper length in a machine is made to be of the same length as that in a remote station and is sent.**
- **Considered to be 2400 bps when the DIS transmission speed is an undefined value.**
  **Becomes a FIF error when the DCS transmission speed is an undefined value.**
- **Considered to be 40ms instruction when the MSLT of DCS is an undefined value.**
- **Considered to have mm ability when DIS inch ability and mm ability are both set to OFF.**
  **Considered to be 200x100 pels/inch when the DCS resolution receives the inch instruction at 3.85 l/mm.**
  **Becomes a FIF error when more than one of bit41, 42 and 43 are set to on in the resolution of DCS.**
- **Becomes a FIF error when DCS receives the MMR instruction without ECM.**
- **Becomes a FIF error when DCS receives the file transfer (BFT) instruction without ECM.**
- **Becomes a FIF error when DCS shows an instruction which exceeds the ability of the machine.**
- **FIF of DIS/DTC is not sent if last octet is 0.**
  **DCS sends FIF whose length is the same as that of the machine.**
- **When undefined signals are received, they are received and ignored in consideration of the future expansion. (not an error)**

#### 1.1.1 FIF data configuration list (DIS/DTC)

**(1) Octet 4**

| bit | Function | Contents | Default |
|---|---|---|---|
| 1 | T.37 Internet fax (Simple mode) | | 0 |
| 2 | Reserved | | 0 |
| 3 | T.38 real time Internet fax | | 0 |
| 4 | Third generation mobile network | | 0 |
| 5 | Reserved | | 0 |
| 6 | V.8 ability | | 0 |
| 7 | ECM frame | 1: 64 octet<br>0: 256 octet | 0 |
| 8 | Reserved | | 0 |

**(2) Octet 5**

| bit | Function | Contents | Default |
|---|---|---|---|
| 9 | Ready for polled transmission | 1: polled transmission documents exist<br>0: no polled transmission documents | @ |
| 10 | Receiver ability | 1: Reception is possible.<br>0: Reception is impossible. | @ |
| 11 | Transmission speed ability | Refer to *1. | 1 |
| 12 | | | 1 |
| 13 | | | 0 |
| 14 | | | 1 |
| 15 | R8×7.7 l/mm and/or 200×200 pels/25.4 mm | | 1 |
| 16 | Two-dimensional coding ability | 1: MR<br>0: MH | 1 |

- @: Changes to 0 or 1 according to a status of devices.
- *1: Transmission speed ability (bit 11, 12, 13 and 14)

| 11 | 12 | 13 | 14 | Contents | Transmission speed |
|---|---|---|---|---|---|
| 0 | 0 | 0 | 0 | V27 ter fall back mode | 24 |
| 0 | 1 | 0 | 0 | V27 ter | 48, 24 |
| 1 | 0 | 0 | 0 | V29 | 96, 72 |
| 1 | 1 | 0 | 0 | V27 ter & V29 | 96, 72, 48, 24 |
| 1 | 1 | 0 | 1 | V27 ter & V29 & V17 | 144, 120, 96, 72, 48, 24 |

**(3) Octet 6**

| bit | Function | Contents | Default |
|---|---|---|---|
| 17 | Recording paper width ability | bit 17, 18<br>0,0=A4<br>0,1=A3<br>1,0=B4<br>1,1=Invalid | 0 |
| 18 | | | 1 |

| bit | Function | Contents | Default |
|---|---|---|---|
| 19 | Recording paper length ability | bit 19, 20<br>0,0=A4<br>0,1=Unlimited<br>1,0=B4<br>1,1=Invalid | 0 |
| 20 | | | 1 |
| 21 | Minimum scan line time ability | Refer to *2. | 1 |
| 22 | | | 0 |
| 23 | | | 0 |
| 24 | Expansion field | | 1 |

- *2: Minimum scan line time ability (bit 21, 22 and 23)

| 21 | 22 | 23 | Contents | |
|---|---|---|---|---|
| 0 | 0 | 0 | 3.85 l/mm --- 20 ms | 7.7 l/mm --- 20 ms |
| 0 | 0 | 1 | 3.85 l/mm --- 40 ms | 7.7 l/mm --- 40 ms |
| 0 | 1 | 0 | 3.85 l/mm --- 10 ms | 7.7 l/mm --- 10 ms |
| 0 | 1 | 1 | 3.85 l/mm --- 10 ms | 7.7 l/mm --- 5 ms |
| 1 | 0 | 0 | 3.85 l/mm --- 5 ms | 7.7 l/mm --- 5 ms |
| 1 | 0 | 1 | 3.85 l/mm --- 40 ms | 7.7 l/mm --- 20 ms |
| 1 | 1 | 0 | 3.85 l/mm --- 20 ms | 7.7 l/mm --- 10 ms |
| 1 | 1 | 1 | 3.85 l/mm --- 0 ms | 7.7 l/mm --- 0 ms |

### (4) Octet 7

| bit | Function | Contents | Default |
|---|---|---|---|
| 25 | Reserved | | 0 |
| 26 | Non-compression mode | | 0 |
| 27 | Error correction mode (ECM) ability | 1: with ECM<br>0: without ECM | 1 |
| 28 | | 0: fixed | 0 |
| 29 | Reserved | | 0 |
| 30 | Reserved | | 0 |
| 31 | T.6 coding (MMR) ability | 1: with MMR<br>0: without MMR | 1 |
| 32 | Expansion field | | 1 |

### (5) Octet 8

| bit | Function | Contents | Default |
|---|---|---|---|
| 33 | Field not valid | | 0 |
| 34 | Multi-selective polling | 1: Ability<br>0: No ability | 0 |
| 35 | Polled sub-address | | 0 |
| 36 | T.43 coding ability | | 0 |
| 37 | Plain Interleave | | 0 |
| 38 | 32K ADPCM voice coding | | 0 |
| 39 | Reserved | | 0 |
| 40 | Expansion field | | 1 |

### (6) Octet 9

| bit | Function | Contents | Default |
|---|---|---|---|
| 41 | R8×15.4 l/mm | | 1 |
| 42 | 300×300 pels/25.4 mm | | 0 |
| 43 | R16×15.4 l/mm and/or 400×400 pels/25.4 mm | | 1 |
| 44 | inch ability | | 1 |
| 45 | mm ability | | 1 |
| 46 | Minimum scan line time ability of high resolution | 0: T15.4=T7.7<br>1: T15.4=1/2T7.7 | 0 |
| 47 | Selective polling | | 1 |
| 48 | Expansion field | | 1 |

### (7) Octet 10

| bit | Function | Contents | Default |
|---|---|---|---|
| 49 | Sub address ability | | 1 |
| 50 | Password | | 1 |
| 51 | Ready for data file transmission (polling) | | 0 |
| 52 | Reserved | | 0 |
| 53 | BFT transfer ability | | 0 |
| 54 | DTM transfer ability | | 0 |
| 55 | EDI transfer ability | | 0 |
| 56 | Expansion field | | 0 |

### (8) Octet 11

| bit | Function | Contents | Default |
|---|---|---|---|
| 57 | BTM transfer ability | | 0 |
| 58 | Reserved | | 0 |
| 59 | Character or mixed mode documents ready for Tx (polling) | | 0 |
| 60 | Character mode ability | | 0 |
| 61 | Reserved | | 0 |
| 62 | Mixed mode ability | | 0 |
| 63 | Reserved | | 0 |
| 64 | Expansion field | | 0 |

### (9) Octet 12

| bit | Function | Contents | Default |
|---|---|---|---|
| 65 | Processible mode (T.505) | | 0 |
| 66 | Digital network ability | | 0 |
| 67 | Full-duplex communication ability | 1: Full-duplex<br>0: Half-duplex | 0 |
| 68 | JPEG coding ability | | 0 |
| 69 | Full color mode | | 0 |
| 70 | | 0: Fixed | 0 |
| 71 | 12 bits / pixel component | | 0 |
| 72 | Expansion field | | 1 |

### (10) Octet 13

| bit | Function | Contents | Default |
|---|---|---|---|
| 73 | No sub sampling (1:1:1) | | 0 |
| 74 | Custom illuminance | | 0 |
| 75 | Custom gamut range | | 0 |
| 76 | North America Letter (215.9*279.4) ability | | 0 |
| 77 | North America Legal (215.9*355.6) ability | | 0 |
| 78 | Single progression sequential coding (T.85) basic ability | | 1 |
| 79 | Single progression sequential coding (T.85) optional LO ability | | @ |
| 80 | Expansion field | | 0 |

- @: Changes to 0 or 1 according to a status of devices.

### (11) Octet 14

| bit | Function | Contents | Default |
|---|---|---|---|
| 81 | HKM key management capability | | 0 |
| 82 | RSA key management capability | | 0 |
| 83 | Override capability | | 0 |
| 84 | HFX40 cipher capability | | 0 |
| 85 | Alternative cipher number 2 capability | | 0 |
| 86 | Alternative cipher number 3 capability | | 0 |
| 87 | HFX40-I hashing capability | | 0 |

| bit | Function | Contents | Default |
|---|---|---|---|
| 88 | Expansion field | | 1 |

**(12) Octet 15**

| bit | Function | Contents | Default |
|---|---|---|---|
| 89 | Alternative hashing system number 2 capability | | 0 |
| 90 | Alternative hashing system number 3 capability | | 0 |
| 91 | Reserved | | 0 |
| 92 | T.44 (Mixed raster content) | | 0 |
| 93 | T.44 (Mixed raster content) | | 0 |
| 94 | T.44 (Mixed raster content) | | 0 |
| 95 | Page length maximum strip size for T.44 (Mixed raster content) | | 0 |
| 96 | Expansion field | | 1 |

**(13) Octet 16**

| bit | Function | Contents | Default |
|---|---|---|---|
| 97 | Color/gray-scale 300 pels/25.4 mm x 300 lines/25.4 mm or 400 pels/25.4 mm x 400 lines/25.4 mm resolution | | 0 |
| 98 | 100 pels/25.4 mm x 100 lines/25.4 mm for color/gray scale | | 0 |
| 99 | Simple phase C BFT negotiations capability | | 0 |
| 100 | Extended BFT negotiations capability | | 0 |
| 101 | Internet selective polling address (ISP) | | 0 |
| 102 | Internet routing address (IRA) | | 0 |
| 103 | Reserved | | 0 |
| 104 | Expansion field | | 1 |

**(14) Octet 17**

| bit | Function | Contents | Default |
|---|---|---|---|
| 105 | 600 pels/25.4 mm x 600 lines/25.4 mm | | 1 |
| 106 | 1200 pels/25.4 mm x 1200 lines/25.4 mm | | 0 |
| 107 | 300 pels/25.4 mm x 600 lines/25.4 mm | | 0 |
| 108 | 400 pels/25.4 mm x 800 lines/25.4 mm | | 0 |
| 109 | 600 pels/25.4 mm x 1200 lines/25.4 mm | | 0 |
| 110 | Color/gray-scale 600 pels/25.4 mm x 600/25.4 mm resolution | | 0 |
| 111 | Color/gray-scale 1200 pels/25.4 mm x 1200/25.4 mm resolution | | 0 |
| 112 | Expansion field | | 0 |

**(15) Octet 18**

| bit | Function | Contents | Default |
|---|---|---|---|
| 113 | Double sided printing capability (alternate mode) | | 0 |
| 114 | Double sided printing capability (continuous mode) | | 0 |
| 115 | Black and white mixed raster content profile (MRCbw) | | 0 |
| 116 | T.45 (run length color encoding) | | 0 |
| 117 | Shared date memory capacity | bit 117, 118<br>0,0=Disable<br>0,1= Level 1=1.0 Mbytes<br>1,0= Level 2=2.0 Mbytes<br>1,1= Level 3=unlimited<br>(i.e. 32 Mbytes or more) | 0 |
| 118 | | | 0 |
| 119 | Reserved | | 0 |
| 120 | Expansion field | | 0 |

**(16) Octet 19**

| bit | Function | Contents | Default |
|---|---|---|---|
| 121 | Flow control capability for T.38 communication | | 0 |
| 122 | K > 4 | | 0 |

| bit | Function | Contents | Default |
|---|---|---|---|
| 123 | Internet aware T.38 mode fax device | | 0 |
| 124 | T.89 (Application profiles for ITU-T T.88) | Refer to *3. | 0 |
| 125 | | | 0 |
| 126 | | | 0 |
| 127 | sYCC-JPEG coding | | 0 |

- *3: T.89 (Application profile for ITU-T T.88)

| 124 | 125 | 126 | Contents |
|---|---|---|---|
| 0 | 0 | 0 | Not used |
| 0 | 0 | 1 | Profile 1 |
| 0 | 1 | 0 | Profile 2 |
| 0 | 1 | 1 | Profile 3 |
| 1 | 0 | 0 | Profile 2 and 3 |
| 1 | 0 | 1 | Reserved |
| 1 | 1 | 0 | Reserved |
| 1 | 1 | 1 | Reserved |

### 1.1.2 FIF data configuration list (DCS)

#### (1) Octet 4

| bit | Function | Contents | Default |
|---|---|---|---|
| 1 | T.37 Internet fax (Simple mode) | | 0 |
| 2 | Reserved | | 0 |
| 3 | T.38 real time Internet fax | | 0 |
| 4 | Third generation mobile network | | 0 |
| 5 | Reserved | | 0 |
| 6 | Invalid | | 0 |
| 7 | Invalid | | 0 |
| 8 | Reserved | | 0 |

#### (2) Octet 5

| bit | Function | Contents | Default |
|---|---|---|---|
| 9 | | 0: fixed | 0 |
| 10 | Reception command | | 1 |
| 11 | Transmission speed instruction | Refer to *1. | @ |
| 12 | | | @ |
| 13 | | | @ |
| 14 | | | @ |
| 15 | R8×7.7 l/mm or 200×200 pels/25.4 mm | 1: 7.7 l/mm<br>0: 3.85 l/mm | @ |
| 16 | Two-dimensional coding instruction | 1: MR<br>0: MH | @ |

- @: Changes to 0 or 1 according to a status of devices.
- *1: Transmission speed appointment (bit 11, 12, 13 and 14)

| 11 | 12 | 13 | 14 | Contents |
|---|---|---|---|---|
| 0 | 0 | 0 | 0 | 24/V27 ter |
| 0 | 1 | 0 | 0 | 48/V27 ter |
| 1 | 0 | 0 | 0 | 96/V29 |
| 1 | 1 | 0 | 0 | 72/V29 |
| 0 | 0 | 0 | 1 | 144/V17 |
| 0 | 1 | 0 | 1 | 120/V17 |
| 1 | 0 | 0 | 1 | 96/V17 |
| 1 | 1 | 0 | 1 | 72/V17 |

#### (3) Octet 6

| bit | Function | Contents | Default |
|---|---|---|---|
| 17 | Recording paper width instruction | bit 17, 18<br>0,0=A4<br>0,1=A3<br>1,0=B4<br>1,1=Invalid | @ |
| 18 | | | @ |

| bit | Function | Contents | Default |
|---|---|---|---|
| 19 | Recording paper length instruction | bit 19, 20<br>0,0=A4<br>0,1=Unlimited<br>1,0=B4<br>1,1=Invalid | @ |
| 20 | | | @ |
| 21 | Minimum scan line time instruction | Refer to *2. | @ |
| 22 | | | @ |
| 23 | | | @ |
| 24 | Expansion field | | @ |

- @: Changes to 0 or 1 according to a status of devices.
- *2: Minimum scan line time instruction (bit 21, 22 and 23)

| 21 | 22 | 23 | Contents |
|---|---|---|---|
| 0 | 0 | 0 | 20 ms |
| 0 | 0 | 1 | 40 ms |
| 0 | 1 | 0 | 10 ms |
| 1 | 0 | 0 | 5 ms |
| 1 | 1 | 1 | 0 ms |

### (4) Octet 7

| bit | Function | Contents | Default |
|---|---|---|---|
| 25 | Reserved | | 0 |
| 26 | Non-compression mode | | 0 |
| 27 | Error correction mode (ECM) instruction | 1: with ECM<br>0: without ECM | @ |
| 28 | Frame size instruction | 1: 64 octet<br>0: 256 octet | @ |
| 29 | Reserved | | 0 |
| 30 | Reserved | | 0 |
| 31 | T.6 coding (MMR) instruction | 1: with MMR<br>0: without MMR | @ |
| 32 | Expansion field | | @ |

- @: Changes to 0 or 1 according to a status of devices.

### (5) Octet 8

| bit | Function | Contents | Default |
|---|---|---|---|
| 33 | Field not valid capability | | 0 |
| 34 | | 0: fixed | 0 |
| 35 | | 0: fixed | 0 |
| 36 | T.43 Coding | | 0 |
| 37 | Plain Interleave | | 0 |
| 38 | 32K ADPCM voice coding | | 0 |
| 39 | Reserved | | 0 |
| 40 | Expansion field | | @ |

- @: Changes to 0 or 1 according to a status of devices.

### (6) Octet 9

| bit | Function | Contents | Default |
|---|---|---|---|
| 41 | R8×15.4 l/mm | | @ |
| 42 | 300×300 pels/25.4 mm | | @ |
| 43 | R16×15.4 l/mm or 400×400 pels/25.4 mm | | @ |
| 44 | inch/mm instruction | 1: mm setting<br>0: inch setting | @ |
| 45 | Arbitrary | | 0 |
| 46 | Arbitrary | | 0 |
| 47 | | 0: fixed | 0 |
| 48 | Expansion field | | @ |

- @: Changes to 0 or 1 according to a status of devices.

**(7) Octet 10**

| bit | Function | Contents | Default |
|---|---|---|---|
| 49 | Sub address transmission | | @ |
| 50 | Password (SID) transmission | | @ |
| 51 | | 0: fixed | 0 |
| 52 | Reserved | | 0 |
| 53 | BFT transfer | | @ |
| 54 | DTM transfer | | 0 |
| 55 | EDI transfer | | 0 |
| 56 | Expansion field | | @ |

- @: Changes to 0 or 1 according to a status of devices.

**(8) Octet 11**

| bit | Function | Contents | Default |
|---|---|---|---|
| 57 | BTM transfer | | 0 |
| 58 | Reserved | | 0 |
| 59 | | 0: fixed | 0 |
| 60 | Character mode | | 0 |
| 61 | Reserved | | 0 |
| 62 | Mixed mode | | 0 |
| 63 | Reserved | | 0 |
| 64 | Expansion field | | @ |

- @: Changes to 0 or 1 according to a status of devices.

**(9) Octet 12**

| bit | Function | Contents | Default |
|---|---|---|---|
| 65 | Processible mode (T.505) | | 0 |
| 66 | Digital network ability | | 0 |
| 67 | Full-duplex communication instruction | 1: Full-duplex<br>0: Half-duplex | 0 |
| 68 | JPEG coding | | 0 |
| 69 | Full color mode | | 0 |
| 70 | Default Huffman table use | | 0 |
| 71 | 12 bits / pixel component | | 0 |
| 72 | Expansion field | | @ |

- @: Changes to 0 or 1 according to a status of devices.

**(10) Octet 13**

| bit | Function | Contents | Default |
|---|---|---|---|
| 73 | No sub sampling (1:1:1) | | 0 |
| 74 | Custom illuminance | | 0 |
| 75 | Custom gamut range | | 0 |
| 76 | North America Letter (215.9 x 279.4) | | 0 |
| 77 | North America Legal (215.9 x 355.6) | | 0 |
| 78 | Single progression sequential coding (T.85) basic | | @ |
| 79 | Single progression sequential coding (T.85) optional LO | | @ |
| 80 | Expansion field | | @ |

- @: Changes to 0 or 1 according to a status of devices.

**(11) Octet 14**

| bit | Function | Contents | Default |
|---|---|---|---|
| 81 | HKM key management selected | | 0 |
| 82 | RSA key management selected | | 0 |
| 83 | Override mode selected | | 0 |
| 84 | HFX40 cipher selected | | 0 |
| 85 | Alternative cipher number 2 selected | | 0 |
| 86 | Alternative cipher number 3 selected | | 0 |
| 87 | HFX40-I hashing selected | | 0 |
| 88 | Expansion field | | @ |

- @: Changes to 0 or 1 according to a status of devices.

### (12) Octet 15

| bit | Function | Contents | Default |
|---|---|---|---|
| 89 | Alternative hashing system number 2 selected | | 0 |
| 90 | Alternative hashing system number 3 selected | | 0 |
| 91 | Reserved | | 0 |
| 92 | T.44 (Mixed raster content) | | 0 |
| 93 | T.44 (Mixed raster content) | | 0 |
| 94 | T.44 (Mixed raster content) | | 0 |
| 95 | Page length maximum strip size for T.44 (Mixed raster content) | | 0 |
| 96 | Expansion field | | @ |

- @: Changes to 0 or 1 according to a status of devices.

### (13) Octet 16

| bit | Function | Contents | Default |
|---|---|---|---|
| 97 | Color/gray-scale 300 pels/25.4 mm x 300 lines/25.4 mm or 400 pels/25.4 mm x 400 lines/25.4 mm resolution | | 0 |
| 98 | 100 pels/25.4 mm x 100 lines/25.4 mm for color/gray scale | | 0 |
| 99 | Simple phase C BFT negotiations capability | | 0 |
| 100 | | 0: Fixed | 0 |
| 101 | | 0: Fixed | 0 |
| 102 | Internet routing address (IRA) Transmission | | 0 |
| 103 | Reserved | | 0 |
| 104 | Expansion field | | @ |

- @: Changes to 0 or 1 according to a status of devices.

### (14) Octet 17

| bit | Function | Contents | Default |
|---|---|---|---|
| 105 | 600 pels/25.4 mm x 600 lines/25.4 mm | | @ |
| 106 | 1200 pels/25.4 mm x 1200 lines/25.4 mm | | 0 |
| 107 | 300 pels/25.4 mm x 600 lines/25.4 mm | | 0 |
| 108 | 400 pels/25.4 mm x 800 lines/25.4 mm | | 0 |
| 109 | 600 pels/25.4 mm x 1200 lines/25.4 mm | | 0 |
| 110 | Color/gray-scale 600 pels/25.4 mm x 600/25.4 mm resolution | | 0 |
| 111 | Color/gray-scale 1200 pels/25.4 mm x 1200/25.4 mm resolution | | 0 |
| 112 | Expansion field | | 0 |

- @: Changes to 0 or 1 according to a status of devices.

### (15) Octet 18

| bit | Function | Contents | Default |
|---|---|---|---|
| 113 | Double sided printing selected (alternate mode) | | 0 |
| 114 | Double sided printing selected (continuous mode) | | 0 |
| 115 | | 0: Fixed | 0 |
| 116 | T.45 (run length color encoding) | | 0 |
| 117 | Shared date memory required | bit 117, 118<br>0,0= not used<br>0,1= Level 1=1.0 Mbytes<br>1,0= Level 2=2.0 Mbytes<br>1,1= Level 3=unlimited<br>(i.e. 32 Mbytes or more) | 0 |
| 118 | | | 0 |
| 119 | Reserved | | 0 |
| 120 | Expansion field | | 0 |

### (16) Octet 19

| bit | Function | Contents | Default |
|---|---|---|---|
| 121 | Flow control capability for T.38 communication | | 0 |

| bit | Function | Contents | Default |
|---|---|---|---|
| 122 | K > 4 | | 0 |
| 123 | Internet aware fax device operating in T.38 mode | | 0 |
| 124 | T.89 (Application profiles for ITU-T T.88) | Refer to *3. | 0 |
| 125 | | | 0 |
| 126 | | | 0 |
| 127 | sYCC-JPEG coding | | 0 |

- *3: T.89 (Application profile for ITU-T T.88)

| 124 | 125 | 126 | Contents |
|---|---|---|---|
| 0 | 0 | 0 | Not used |
| 0 | 0 | 1 | Profile 1 |
| 0 | 1 | 0 | Profile 2 |
| 0 | 1 | 1 | Profile 3 |
| 1 | 0 | 0 | Invalid |
| 1 | 0 | 1 | Reserved |
| 1 | 1 | 0 | Reserved |
| 1 | 1 | 1 | Reserved |

## 1.2 Modem fallback sequence

- Fallback sequences of TCF and CTC are shown as follows:

### 1.2.1 V17, V29, and V27 ter

| Ability of a remote station | TCF fallback sequence |
|---|---|
| V27 ter/V29 | 96/V.29 -> 72/V.29 -> 48/V.27 ter -> 24/V27 ter |
| V27 ter/V29/V33 V17 | 144/V.17 -> 120/V.17 -> 96/V.17 -> 72/V.17 -> 48/V.27 ter -> 24/V27 ter |

- On the transmission side: If PPR is received four times, a modem is set in the fallback state.
- On the reception side: In case of sending PPR, when the number of error frames exceeds the FP value, a modem is set in the fallback state.

### 1.2.2 V34 fallback

- Line quality is always water by modem. Optimum speed is automatically selected on-the-fly.

## 1.3 V8/V34 sequence

### 1.3.1 V34

#### (1) Outline

- The 33.6kbps data transmission method and protocol including the V8 protocol. As for each of full-duplex and half-duplex, startup handshake until data transmission starts is divided into four phases, phase1 to 4, and signals used in each phase are regulated.

#### (2) Features

- Full-duplex (echo canceler method) / Half-duplex method are regulated (for data / FAX respectively)
- 2400, 3000 and 3200 symbols / sec (mandatory) and 2743, 2800 and 3429 symbols / sec (option) QAM synchronous transmission at each symbol rate
- Communication at each signal rate of 33600, 31200, 28800, 26400, 24000, 21600, 19200, 16800, 14400, 12000, 9600, 7200, 4800 and 2400 bps
- Four-dimensional-symbol trellis coding
- A 200bps sub channel which can be used as an asynchronous second channel (option)
- Negotiation in which characteristics of a line is measured before transmission starts and the maximum communication speed is achieved by finely adjusting the transmission parameter, based on the result of measurement (carrier / frequency / equalizer / symbol rate / level, etc.)
- Data transmission in the super frame with the hierarchical structure

### 1.3.2 Sample of a signal procedure at sending two pages

#### (1) Beginning of communications to beginning of 1st page transmission

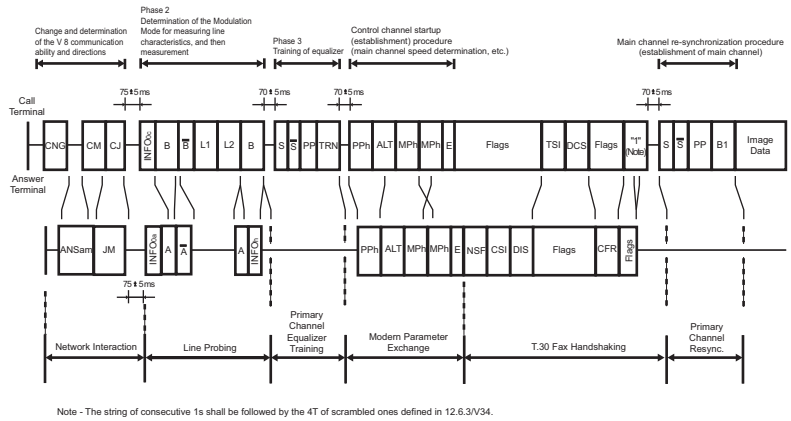


Note - The string of consecutive 1s shall be followed by the 4T of scrambled ones defined in 12.6.3/V34.

#### (2) Signals between pages

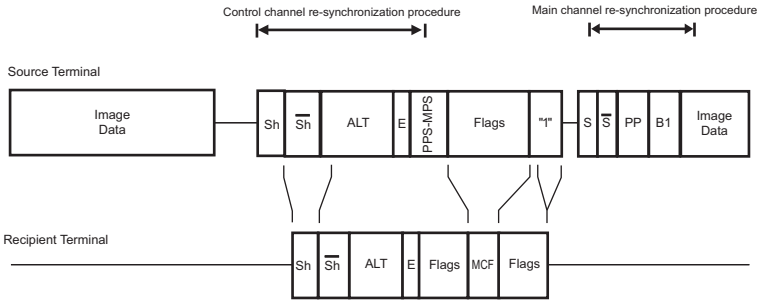


#### (3) 2nd page transmission termination to communication termination

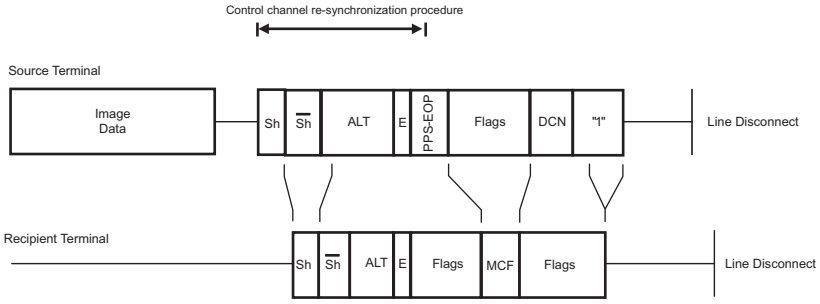


Note - Some terminals may disconnect the line immediately after sending DCN without sending consecutive 1s.

### 1.3.3 Procedure details

#### (1) Phase 1 (V8) ....Beginning of connection between a calling modem and a called modem

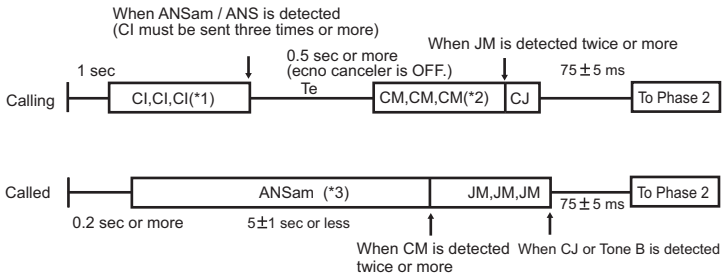


- *1: One of no signals / C1 / CNG (T.30) / CT (V.25)
- *2: V.34 full-duplex ability in the modulation mode bit is ON.
- *3: ANSam of phase inversion is sent. Phase inversion is an option in case of supporting only half-duplex. When CM or valid signal from the calling side is not detected, the procedure is moved to T.30, etc. after 75 ± 5 ms interval.

### (a) Signal Definition

| Signal type | Meaning | Signal direction call called | Signal speed | Timing of transmission |
|---|---|---|---|---|
| CI (Call Indicator) | Function display on the calling side | -> | V21(L) (300 bps) | • Start: after 0.4 seconds after line connection from ON condition (in the following format)<br>• Stop: when 3 period or more has passed after ANSam / ANS is detected<br> 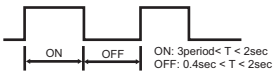 |
| | [Comments]<br>• CI is a signal to carry call function.<br>• The calling side send CI, CT (Call Tone - V25) or CNG.<br>• CI transmission and detection are optional.<br>• The ON minimum time (=3 Period) is of duration of three CI signals in the following format. | | | |
| ANSam (Modified Answer Tone) | V.8 procedure on the called side Support display | <- | - | When 0.2 seconds or more has passed after reception |
| | [Comments]<br>• Essential for a called machine which supports the V8 procedure.<br>• 2100 Hz sine wave is phase-inverted by 400 +/-25 ms periods, then amplitude modulated by 15 +/-0.1 Hz sine wave<br>• Average value of modulation factor (x) 0.8 +/- 0.01 < x < 1.2 +/- 0.01<br>• Average transmission power compliant to V2<br>• 2100 +/- 200 Hz external power is smaller than the average power by 24 dB or more. | | | |
| CM (Call Menu) | Modulation mode etc. on the calling side | -><br>(300 bps) | V.21 (L) | • Start: Te (0.5 sec. ≤ Te ≤ 1 sec.) has passed after CI transmission stops<br>• Stop: When two or more JM are detected |
| | [Comments]<br>• CM is a signal which carries call function, modulation modes, protocols and GSTN access.<br>• The first information category is call function.<br>• Protocols and GSTN access category are added when the calling side has ability and when needed to inform to a remote station. | | | |
| CJ | CM termination | -><br>(300 bps) | V.21 (L) | When CM is completed |
| | [Comments]<br>• START bit (0) and STOP bit (1) are added to 1 octet of all bit 0.<br>• Signal format<br>Start bit b0 b1 b2 b3 b4 b5 b6 b7 Stop bit<br>0 0 0 0 0 0 0 0 0 1 | | | |
| JM (Joint Menu) | Display of common ability on both calling and called sides | <-<br>(300 bps) | V.21 (H) | • Start: When two or more same CM are received<br>• Stop: When CJ is received or receives a signal matching the selected Modulation Mode from the calling side |
| | [Comments]<br>• JM is a response signal to CM and of the same format as the received CM.<br>• The fist information category is Call Function as same as CM.<br>• Modulation mode sets the common bit on calling and called sides and sends by the same octet as received CM.<br>• When there is no common ability, all bits are set to 0 and send by the same octet as received CM.<br>• The minimum item No. is selected from the common bits to determine the actual Modulation Mode.<br>• Protocol is added when it is included in received CM and needed to instruct.<br>• GSTN access is added when it is included in received CM and needed to instruct.<br>• Bit 6 is set to ON when needed to show ability. Bit 5 is set to the same one as received CM. | | | |

### (b) Signal format

1. Preamble: a signal added before each signal when CI, CM and JM signals are sent.
   - Format: 1111111111 +0000000001 (for CI)
   - Format: 1111111111 +0000001111 (for CM and JM)
2. Common format among each signal CI, CM and JM
   - Start Bit (=0) is put at the top and Stop Bit (=1) is put at the end of each octet.

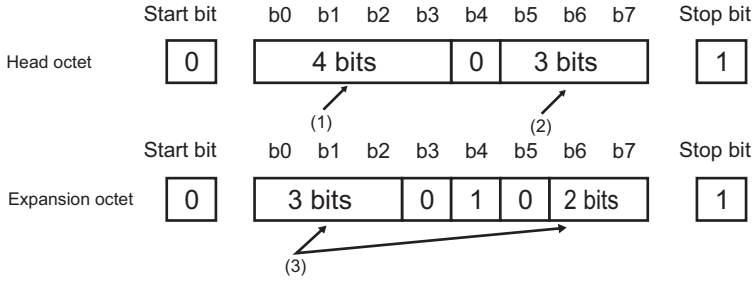


- (1): Category tag (tags which represent information types)

| Bit assignment | | | | | Meaning (information type) | Included signal |
|---|---|---|---|---|---|---|
| b0 | b1 | b2 | b3 | | | |
| 1 | 0 | 0 | 0 | ... | Call Func | Top of CM, JM / CI |
| 1 | 0 | 1 | 0 | ... | Modulation Mode | CM/JM |
| 0 | 1 | 0 | 1 | ... | Protocols | CM/JM |
| 1 | 0 | 1 | 1 | ... | GSTN access | CM/JM |
| 0 | 1 | 1 | 0 | ... | PCM modem ability | CM/JM |

- (2): Option bit (Differs depending on category tags. See "PL.1.3.4 Common signal bit definition".)
- (3): Additional option bit (Differs depending on category tags. See "PL.1.3.4 Common signal bit definition".)

### 1.3.4 Common signal bit definition

#### (1) Call function (1 octet)

##### (a) Top octet

| b0 | b1 | b2 | b3 | b4 | b5 | b6 | b7 | Meaning |
|---|---|---|---|---|---|---|---|---|
| 1 | 0 | 0 | 0 | 0 | | | | (Call Function category tag) |
| | | | | | 0 | 0 | 0 | Defined by ITU-T |
| | | | | | 1 | 0 | 0 | PSTN multi-media terminal |
| | | | | | 0 | 1 | 0 | V18 text phone |
| | | | | | 1 | 1 | 0 | Video tex |
| | | | | | 0 | 0 | 1 | FAX transmission from the calling terminal |
| | | | | | 1 | 0 | 1 | FAX reception in the calling terminal |
| | | | | | 0 | 1 | 1 | Data transmission / reception |
| | | | | | 1 | 1 | 1 | Expansion octet = with call function represented by next octet |

- (Other than the above = Reserved)

#### (2) Modulation mode (3 octets)

##### (a) 1st octet

| b0 | b1 | b2 | b3 | b4 | b5 | b6 | b7 | Meaning | Item No. |
|---|---|---|---|---|---|---|---|---|---|
| 1 | 0 | 1 | 0 | 0 | | | | (Modulation mode category tag, b4 = 0 is first octet) | |
| | | | | | 0/1 | | | PCM modem ability disabled/enabled | |
| | | | | | | 0/1 | | V34 full-duplex ability disabled/enabled | 1 |
| | | | | | | | 0/1 | V34 half-duplex ability disabled/enabled | 2 |

##### (b) 2nd octet

| b0 | b1 | b2 | b3 | b4 | b5 | b6 | b7 | Meaning | Item No. |
|---|---|---|---|---|---|---|---|---|---|
| | | | 0 | 1 | 0 | | | (b3, 4 and 5=0, 1, 0 means expanded oct.) | |
| 0/1 | | | | | | | | V32 bis / V32 ability disabled / enabled | 3 |
| | 0/1 | | | | | | | V22 bis / V22 ability disabled / enabled | 4 |
| | | 0/1 | | | | | | V17 ability disabled / enabled | 5 |
| | | | | | | 0/1 | | V29 half-duplex ability disabled / enabled (used in T.30) | 6 |
| | | | | | | | 0/1 | V27 ter ability disabled / enabled | 7 |

##### (c) 3rd octet

| b0 | b1 | b2 | b3 | b4 | b5 | b6 | b7 | Meaning | Item No. |
|---|---|---|---|---|---|---|---|---|---|
| | | | 0 | 1 | 0 | | | (b3, 4 and 5=0, 1, 0 means expanded oct.) | |
| 0/1 | | | | | | | | V26 ter ability disabled / enabled | 8 |
| | 0/1 | | | | | | | V26 bis ability disabled / enabled | 9 |

| b0 | b1 | b2 | b3 | b4 | b5 | b6 | b7 | Meaning | Item No. |
|---|---|---|---|---|---|---|---|---|---|
| | | 0/1 | | | | | | V23 full-duplex ability disabled / enabled | 10 |
| | | | | | | 0/1 | | V23 half-duplex ability disabled / enabled | 11 |
| | | | | | | | 0/1 | V21 ability disabled / enabled | 12 |

### (3) Protocols (1 octet)

| b0 | b1 | b2 | b3 | b4 | b5 | b6 | b7 | Meaning |
|---|---|---|---|---|---|---|---|---|
| 0 | 1 | 0 | 1 | 0 | | | | (Protocols category tag) |
| | | | | | 1 | 0 | 0 | V42 LAPM protocol |
| | | | | | 1 | 1 | 1 | Protocol represented by expanding octet |

- (Other than the above = Reserved)

### (4) GSTN access (1 octet)

| b0 | b1 | b2 | b3 | b4 | b5 | b6 | b7 | Meaning |
|---|---|---|---|---|---|---|---|---|
| 1 | 0 | 1 | 1 | 0 | | | | (GSTN access category tag) |
| | | | | | 0/1 | | | Celluler connection in the calling side |
| | | | | | | 0/1 | | Celluler connection in the called side |
| | | | | | | | 0/1 | 0: Analog network connection<br>1: Digital network connection |

### (5) PCM modem capability (1 octet)

| b0 | b1 | b2 | b3 | b4 | b5 | b6 | b7 | Meaning |
|---|---|---|---|---|---|---|---|---|
| 1 | 1 | 1 | 0 | 0 | | | | (PCM modem category tag) |
| | | | | | 0/1 | | | V.90 analog modem capability |
| | | | | | | 0/1 | | V.90 digital modem capability |
| | | | | | | | 0/1 | V.91 capability |

## 1.3.5 Phase 2 (Probing) ..... V.34 basic setting

- Exchange of modulation ability
- Measurement of line characteristics (bi-direction)
- Determination and exchange of compensation values to line characteristics (compensation values of maximum data rate, transmission level, pre-emphasis (*))
  - *: linear equalizer for compensating amplitude distortion

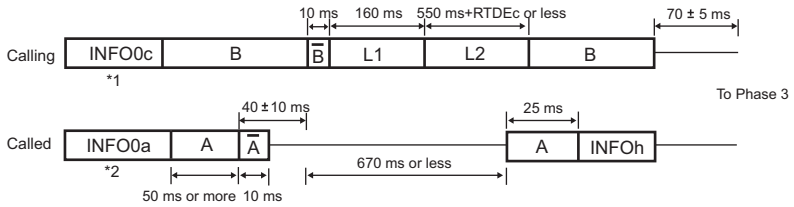


| | | |
|---|---|---|
| A | • 2400 Hz tone signal output from the called side (Level is a set value -1 dB).<br>• 1800 Hz guard tone (Level is a set value -7 dB) is output simultaneously from the called side. | |
| $\bar{A}$ | • 2400 Hz tone signal output from the called side (Phase inversion of A).<br>• 1800 Hz guard tone. | |
| B | 1200 Hz tone signal output from the called side. | |
| $\bar{B}$ | 1200 Hz tone signal output from the calling side (Phase inversion of B). | |
| INFO 0x | Binary signal for indicating auto modulation option signal (x=a/c: a: called side, c: calling side) | |
| L1, L2 | Signal for conditioning line characteristics (tone synthesis at the interval of 150 Hz from 150 to 3750 Hz (except for 900, 1200, 1800 and 2400 Hz)) | • L1: 160 ms, Level= Set value+6 dB<br>• L2: Maximum 550 ms+TRDEx, Level = Set value |
| INFO h | Binary signal for indicating parameters used in Phase 3 (training of main channel equalizer). This signal is sent from a modem receiving main channel data to a transmitting modem. | |

- *1: INFO 0c Bit 28 OFF
- *2: INFO 0a Bit 28 OFF

### (1) <INFO 0x Bit Assignment>

| Bits (LSB-MSB) | Value | Meaning | |
|---|---|---|---|
| 0-3 | 1111 | Fill Bits | |
| 4-11 | 01110010 | Bit string for frame synchronization | |
| 12 | 0/1 | 2743 symbol / sec support | • 0: No |

| Bits (LSB-MSB) | Value | Meaning | |
|---|---|---|---|
| | | | • 1: Yes |
| 13 | 0/1 | 2800 symbol / sec support | • 0: No<br>• 1: Yes |
| 14 | 0/1 | 3429 symbol / sec support | • 0: No<br>• 1: Yes |
| 15 | 0/1 | Ability to transmit at low carrier frequency at 3000 symbol / sec | • 0: No<br>• 1: Yes |
| 16 | 0/1 | Ability to transmit at high carrier frequency at 3000 symbol / sec | • 0: No<br>• 1: Yes |
| 17 | 0/1 | Ability to transmit at low carrier frequency at 3200 symbol / sec | • 0: No<br>• 1: Yes |
| 18 | 0/1 | Ability to transmit at high carrier frequency at 3200 symbol / sec | • 0: No<br>• 1: Yes |
| 19 | 0/1 | 3429 symbol / sec transmission | • 0: Disable<br>• 1: OK |
| 20 | 0/1 | Ability to lower the transmission level than a preset value | • 0: No<br>• 1: Yes |
| 21-23 | 0 to 5 | Maximum tolerance of symbol rates between transmission and reception | • 0: 2400 symbol/sec<br>• 1: 2743 symbol/sec<br>• 2: 2800 symbol/sec<br>• 3: 3000 symbol/sec<br>• 4: 3200 symbol/sec<br>• 5: 3429 symbol/sec |
| 24 | 0/1 | 1=INFO 0 is sent from the CME modem | |
| 25 | 0/1 | 1664 signal point (33.6 K) ability | • 0: No<br>• 1: Yes |
| 26-27 | 0 to 3 | Clock source transmission | • 0: Internal<br>• 1: External<br>• 2: Synchronous to the reception clock<br>• 3: Reserved |
| 28 | 0/1 | 1=Correct INFO 0 frame is received during error recovery | |
| 29-44 | | CRC | |
| 45-48 | 1111 | Fill Bits | |

**(2) <INFO h Bit Assignment>**

| Bits (LSB-MSB) | Value | Meaning | |
|---|---|---|---|
| 0-3 | 1111 | Fill Bits | |
| 4-11 | 01110010 | Bit string for frame synchronization (transmitted from the left side) | |
| 12-14 | 0 to 7 | • Output reduction width demanded by the reception modem (dB)<br>• When *the modem on the transmitting side can not reduce output* at INFO 0, the value is set to 0. | |
| 15-21 | 0 to 127 | The length of TRN which the modem of the transmitting side send in the Phase 3 (x 35 ms) | |
| 22 | 0/1 | High carrier is user for data mode Tx. | |
| 23-26 | 0 to 10 | Pre-emphasis filer index No.which is used for data transmission | |
| 27-29 | 0 to 5 | Symbol rate of data transmission | 0: 2400 ... 5: 3429 (symbol / sec) |
| 30 | 0/1 | Selection of parameters used for TRN. | • 0: 4 points<br>• 1: 16 points |
| 31-46 | | CRC | |
| 47-50 | 1111 | Fill Bits | |

### 1.3.6 Phase 3 .....Training of the main channel equalizer

- Band division full-duplex method
- Transmission and reception of Phase 3 signals (S,S̄PP, TRN) are executed by using parameter values which are determined by exchanging INF Oh. (symbol rate, carrier frequency, pre-emphasis filter and transmission level)

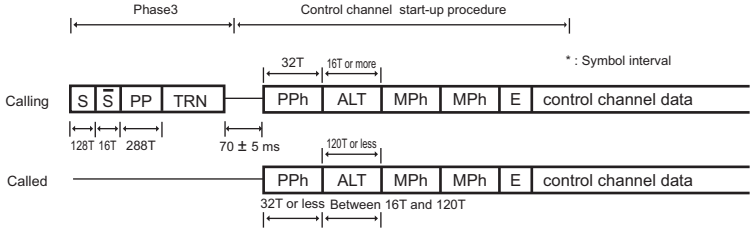


- The speed of the following signals (Phase 3) are determined by INFOh. (The following signals are used in the main channel in the half-duplex procedure.)

| | |
|---|---|
| S | Signal which sends alternately 0 point and a point which rotated 0 point counterclockwise by 90 degrees |
| $\overline{S}$ | Signal which sends alternately a point which rotated 0 point counterclockwise by 180 degrees and a point which rotated 0 point counterclockwise by 270 degrees |
| PP | Special signal which is sent from a remote station for adjusting an equalizer |
| TRN | Training signal. (Symbol rate and duration are determined in INFOh.) |

### (1) Control channel signal

- The following signals are used for establishing the control channel or re-synchronization and retrain. (peculiar to half-duplex procedure)

| | | |
|---|---|---|
| Modulation method | 1200 / 2400 bps QAM modulation (600 ± 0.01 symbols / sec). However, training and synchronous signals are 1200 bps. | • Calling modem: Carrier (=1200 Hz ± 0.01 % (level = set value))<br>• Called modem: Carrier (=2400 Hz ± 0.01 % (level = set value-1 dB)) + Guard tone (=1800 Hz ± 0.01 % (level = set value-7 dB)) |
| Sh | Signal which sends alternately 0 point and a point which rotated 0 point counterclockwise by 90 degrees (the same as S) | |
| $\overline{Sh}$ | Signal which sends alternately a point which rotated 0 point counterclockwise by 180 degrees and a point which rotated 0 point counterclockwise by 270 degrees (the same as S) | |
| AC | Signal which send alternately 0 point and a point which rotated 0 point by 180 degrees | |
| PPh | Special signal which is sent from a remote station for adjusting an equalizer (used when the initial of the control channel and re-synchronization are executed) | |
| ALT | Signal which scrambled alternate signals of 0 and 1 (1200 bps) | |
| MPh | Binary signal used for exchanging parameters of the modulation method when data is actually sent and received by using the main channel (1200 bps) | • Both type 0 and type 1 (type 0+pre-recording coefficient) must be received.<br>• When type 0 is received, pre-recording coefficient is considered to be 0 and never functions. |
| E | “1”, binary of 20 bit, which represents the beginning of user data transmission on the control channel | |

### (2) MPh (type 0) bit assignment

| Bits (LSB-MSB) | Value | Meaning | |
|---|---|---|---|
| 0-16 | All bit 1 | Bit string for frame synchronization | |
| 17 | 0 | Start bit | |
| 18 | 0 | MP signal type | |
| 19 | 0 | Reserved | |
| 20-23 | 1 to 14 | Maximum transmission rate from the calling modem to the called modem (x 2400) *1 | |
| 24-26 | 0,0,0 | Reserved | |
| 27 | 0/1 | Control channel data transmission rate which is selected by the opposed transmitter | • 0: 1200 bps<br>• 1: 2400 bps |
| 28 | 0 | Reserved | |
| 29-30 | | Trellis coding device selection *2 | • 00: 16 state<br>• 10: 32 state<br>• 01: 64 state<br>• 11: Reserved |
| 31 | 0/1 | Non-linear encoder parameter selection for the terminal transmitter of a remote station *2 | • 0: φ=0<br>• 1: φ=0.3125 |
| 32 | 0/1 | Parameter (shaping) selection when the data rate is determined within each symbol rate *2 | • 0: Minimum<br>• 1: Expanded |
| 33 | 0 | Reserved | |
| 34 | 0 | Start bit | |
| 35-49 | | Communication speed mask (Bit 35=2400 bps ... Bit 46=28.8 kbps, Bit 47=31.2 kbps, Bit 48=33.6 kbps and Bit 49=Reserved) | • 0: Ability of both modems disabled<br>• 1: Enabled |
| 50 | 0/1 | Use of control channel imbalance data rate | • 0: No<br>• 1: Yes |
| 51 | 0 | Start bit | |
| 52-67 | 0 | Reserved | |
| 68 | 0 | Start bit | |
| 69-84 | | CRC | |
| 85-87 | 0,0,0 | Fill Bits | |

- *1: 13 and 14 are used when the opposed modem supports up to 1664 points
- *2: Set to 0 on the transmitting modem.

### (3) MPh (type 1) bit assignment

| Bits (LSB-MSB) | Value | Meaning | |
|---|---|---|---|
| 0-16 | All bit 1 | Bit string for frame synchronization | |
| 17 | 0 | Start bit | |
| 18 | 1 | MP signal type | |
| 19 | 0 | Reserved | |
| 20-23 | 1 to 14 | Maximum transmission rate from the calling modem to the called modem (x 2400) *1 | |
| 24-26 | 0,0,0 | Reserved | |
| 27 | 0/1 | Control channel data transmission rate which is selected by the opposed transmitter | • 0: 1200 bps<br>• 1: 2400 bps |
| 28 | 0 | Reserved | |
| 29-30 | | Trellis coding device selection *2 | • 00: 16 state<br>• 10: 32 state<br>• 01: 64 state<br>• 11: Reserved |
| 31 | 0/1 | Non-linear encoder parameter selection for the terminal transmitter of a remote station *2 | • 0: φ=0<br>• 1: φ=0.3125 |
| 32 | 0/1 | Parameter (shaping) selection when the data rate is determined within each symbol rate *2 | • 0: Minimum<br>• 1: Expanded |
| 33 | 0 | Reserved | |
| 34 | 0 | Start bit | |
| 35-49 | | Communication speed mask (Bit 35=2400 bps ... Bit 46=28.8 kbps, Bit 47=31.2 kbps, Bit 48=33.6 kbps and Bit 49=Reserved) | • 0: Ability of both modems disabled<br>• 1: Enabled |
| 50 | 0/1 | Use of control channel imbalance data rate | • 0: No<br>• 1: Yes |
| 51 | 0 | Start bit | |
| 52-67 | | Pre-coding coefficient h (1) Real | |
| 68 | 0 | Start bit | |
| 69-84 | | Pre-coding coefficient h (1) Imaginary | |
| 85 | 0 | Start bit | |
| 86-101 | | Pre-coding coefficient h (2) Real | |
| 102 | 0 | Start bit | |
| 103-118 | | Pre-coding coefficient h (2) Imaginary | |
| 119 | 0 | Start bit | |
| 120-135 | | Pre-coding coefficient h (3) Real | |
| 136 | 0 | Start bit | |
| 137-152 | | Pre-coding coefficient h (3) Imaginary | |
| 153 | 0 | Start bit | |
| 154-169 | | Reserved | |
| 170 | 0 | Start bit | |
| 171-186 | | CRC | |
| 187 | 0 | Fill Bits | |

- *1: 13 and 14 are used when the opposed modem supports up to 1664 points
- *2: Set to 0 on the transmitting modem.

## 1.3.7 Re-synchronization procedure / Startup procedure

- A procedure required to switch control channel and main channel in the half-duplex procedure
- A procedure which includes another modulation parameter exchanging is especially called the startup procedure. (used for changing the communication speed)

### (1) Startup procedure

- Control channel startup procedure (By exchanging MPh, the communication speed is changed.)
- “Control channel re-synchronization procedure” is not used.

### (2) Re-synchronization procedure

- Control channel re-synchronization.
- See signals related to control channels for signal names and change method.

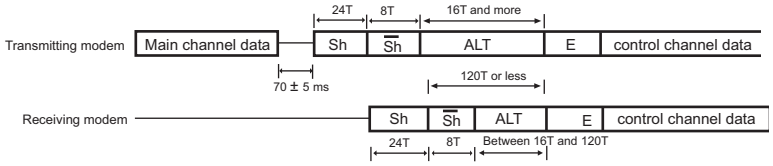


### (a) Main channel re-synchronization procedure and Turn-off

- The receiving modem re-synchronizes the main channel by using the PP signal. After B1, starts receiving Primary Data.
- The transmitting modem sends the scrambled 1's for 35 ms after Primary Data transmission has been completed.
- Both modems move to the control channel re-synchronization procedure or the control channel startup procedure.

| | |
|---|---|
| S | Signal which sends alternately 0 point and a point which rotated 0 point counterclockwise by 90 degrees |
| $\overline{S}$ | Signal which sends alternately a point which rotated 0 point counterclockwise by 180 degrees and a point which rotated 0 point counterclockwise by 270 degrees |
| PP | Special for adjusting an equalizer |
| B1 | High-speed signal of one frame length which is sent at the end of a series of startup sequence in the selected modulation parameter. |

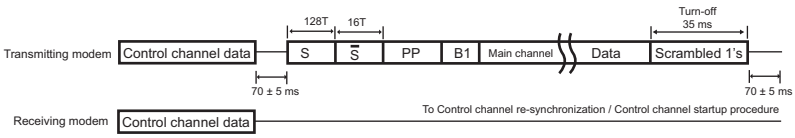


## 1.3.8 Other

### (1) Minimum reception signal level (RLSD) (half-duplex mode only)

- The reception circuit is turned to ON when the signal becomes 43 dBm or more.
- When the signal becomes 48 dBm or less, the reception circuit is turned OFF within 20 to 25 ms after it has exceeded the thresh old.

### (2) Data frame structure

- All data transmitted in V.34 (after the Phase 4) is treated in the following frame format.
  - J: The number of data frames within one super frame
  - P: The number of mapping frames within one data frame

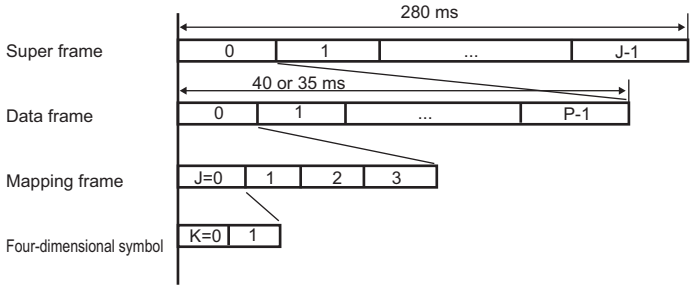


| Modulation Speed | J | P |
|---|---|---|
| 2400 baud | 7 | 12 |
| 2743 baud | 8 | 12 |
| 2800 baud | 7 | 14 |
| 3000 baud | 7 | 15 |
| 3200 baud | 7 | 16 |
| 3429 baud | 8 | 15 |

# 2. FUNCTION

## 2.1 Telephone function

### 2.1.1 TEL/FAX switching

#### (1) Outline

- A function to switch telephone and FAX automatically after reception. (Depends on Country spec.)

#### (2) Operation

1. When CNG is not detected for 2 seconds (or 4 seconds, following address parameter) after line seizure, this function sends voice response message 1 and continues CNG detection.
2. If voice response 1 is sent and CNG detection is continued for 4 seconds but could not be detected, external ringer is sent to the externally installed phone.
3. When CNG is not detected for a given period (Default is 20 seconds. Changeable by address parameters), this function stops external ringer transmission and becomes fax reception after the voice response message 2 is sent.
4. This function detects OFF-HOOK of the external telephone during external ringer transmission only.
5. When OFF-HOOK of the external telephone is detected during external ringer transmission, the line is connected to the external telephone. Even if you use the telephone, you can manually switch to the fax reception after that.
6. When CNG is detected during the above-mentioned external ringer transmission, External ringer transmission is stopped and the fax reception starts.

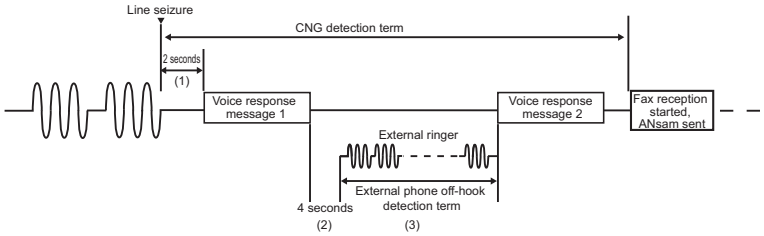


#### (3) Related FP

| No. | FP | Meaning and purpose | Address | Value | Default | Note |
|---|---|---|---|---|---|---|
| 1 | Tel-Fax switching | TEL/FAX switching mode | 0x0e0095 bit5 | 0: Disabled<br>1: Enabled | 0 | Those with a Administrator Settings |
| 2 | RBT transmission time | RingBackTone signal transmission time | 0x0e00fc | unit: 1000 ms, HEX | 0x14 (20 sec.) | A serviceman setting by address setting |
| 3 | Tel-Fax switching parameter | Time from vocal response to RBT transmission (CNG detection waiting time 2) | 0x0e0095 bit7 | 0: 4 sec.<br>1: 2 sec. | 0 | Same as the above |
| 4 | Tel-Fax switching parameter | Time from reception to voice response transmission (CNG detection waiting time 1) | 0x0e0095 bit6 | 0: 2 sec.<br>1: 4 sec. | 0 | Same as the above |
| 5 | Tel-Fax switching parameter | TEL/FAX switching ON response details | 0x0e0095 bit3 | 0: Voice response + RBT transmission<br>1: RBT transmission only | 0 | Those with a Administrator Settings |

## 2.2 F-code

- F-code is a function to realize confidential transmission / bulletin board polling / relay transmission by using SUB, SEP and SID signals.
- To be more specific, a machine which can open “a box” on the memory is called “a F code compliant center machine” and a machine which can access to a center machine by using the F code function is called “a F-code compliant machine.” The center machine can have plural “boxes” and they are used as the confidential box, bulletin board box and relay box respectively.
- Function outline is as follows.

| Function | Outline | Signals to be used | | | Use (Meaning) | Required function | Remark |
|---|---|---|---|---|---|---|---|
| | | SUB | SEP | SID | | | |
| Confidential transmission | Sent to the center machine which opens a confidential box by appointing the confidential box No. (The center machine has memory reception to the confidential box.) | ○ | × | △ | • SUB = Appointment of a confidential box<br>• SID = Password | Registration = Message adding | Each box No. = Contents of a signal (20 digits or less) |
| Bulletin board polling | By appointing a box No. in the center machine which opens a bulletin board, contents are polled. | × | ○ | × | SUB = Appointment of a bulletin board box | • Registration = Message overwriting<br>• With a mode which is not deleted by polling. | |

| Function | Outline | Signals to be used | | | Use (Meaning) | Required function | Remark |
|---|---|---|---|---|---|---|---|
| | | SUB | SEP | SID | | | |
| Relay transmission | Requesting relay to the relay machine which opens a relay box (No.) in which a broadcasting transmission remote station is registered. | ○ | × | ○ | • SUB = Appointment of a relay box (No.)<br>• SID = Password | | |

- ○ = interact is required
- △ = selectable
- × = do not use

### 2.2.1 Signal format

#### (1) Contents of signals

| Item / Signal Name | SUB/SEP | SID |
|---|---|---|
| Characters | 0 to 9 only (* and # must not be used.) | • 0 to 9<br>• *<br>• # |
| Contents | Box No. | Password |
| No. of digits | Arbitrary between 1 and 20 | |
| Space between digits | Prohibited | |
| Others | Impossible to designate more than one box | |

#### (2) FIF (SUB/SEP/SID) common

- The last digit is left-justified. The remaining are filled with space (0x20)

eg.) 12345

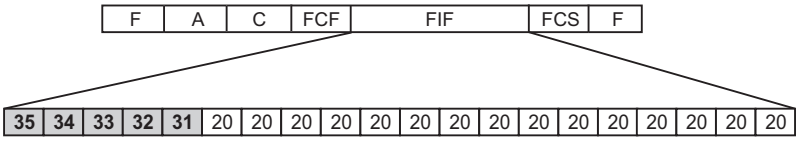


#### (3) DIS/DTC/DCS bit condition

| Bit No. | Meaning | DIS/DTC | DCS |
|---|---|---|---|
| 47 | Selective polling ability | • DIS = ON when SEP reception is possible<br>• DTC = ON when SEP is transmitted | 0: fixed |
| 49 | Sub address ability / function | ON when SUB reception is possible | ON when SUB transmission is possible |
| 50 | Password / sender ID | • DIS = ON when SID reception is possible<br>• DTC = ON when SID is transmitted | ON when SID is transmitted |

### 2.2.2 F-code confidential transmission

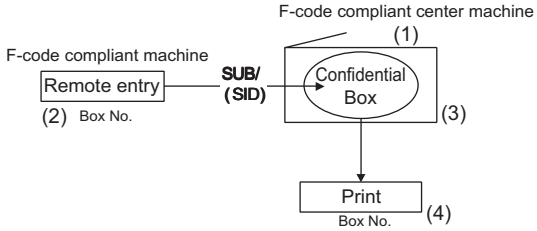


1. The confidential box is registered in the center machine.
   - Registration of confidential box No. and name
   - Registration of communication password
   - Registration of box password
2. Transmission operation on the transmitting side
   - Specification of confidential box No.
3. Reception in the center machine
   - Automatic output of confidential communication report
4. Printing in the center machine
   - Output by entering an access protect No.

### (1) BOX specifications

| | |
|---|---|
| Confidential box No. | • Represented by a nine digit number. Operationally between 1 and 999999999.<br>• You can not open the same box number as the bulletin board No. which has been already opened. |
| Communication password | Possible to use. |
| Confidential BOX name | Possible to resister up to 20 characters. |
| Erased at printing | Erased on every page after output. |
| Box password | Represented by eight digit number between 00000000 and 99999999. |
| No. of files in confidential box | 100 files at the maximum including bulletin board. |

### (2) Example of the protocol sequence

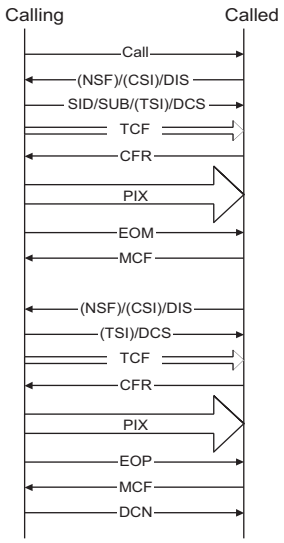


## 2.2.3 F-code bulletin board polling

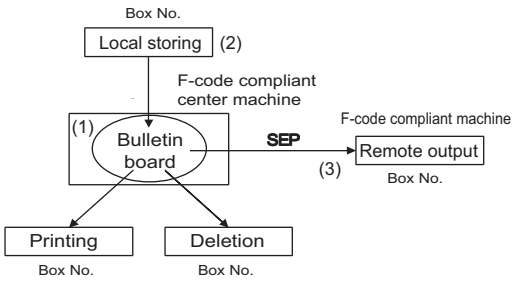


1. Registration of the bulletin board box in the center machine
   - Registration of the bulletin board No. and name
2. Storing documents in the bulletin board
3. Operations for polling reception on the compliant machine
   - Appointment of bulletin board No.

### (1) BOX specifications

| | |
|---|---|
| Bulletin board box No. | • Represented by a nine digit number. Operationally between 1 and 999999999.<br>• You can not open the same box number as the confidential box which has been already opened. |
| Bulletin board password | No |
| Bulletin board box name | • Yes<br>• Same number of characters as the confidential box |
| Erased at printing | Not erased when printed. |
| Erased at polling | Not erased when polled. |
| Access protect No. | No |
| No. of document registration to the bulletin board box | Only once. If already exist, it is overwritten. |

### (2) Example of protocol sequence

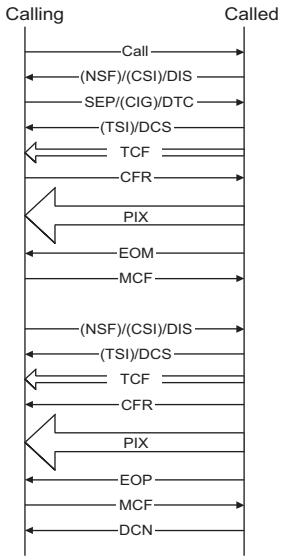


## 2.2.4 F-code relay transmission

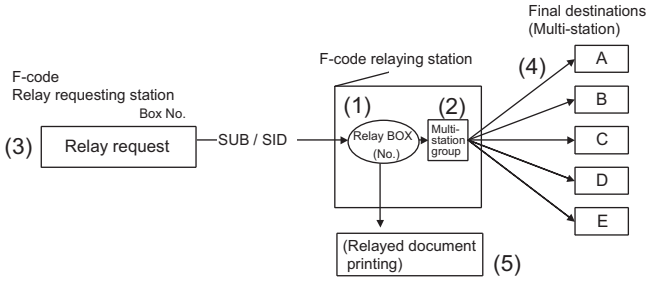


**NOTE**

- **This machine is only relay requests and do not function as a relaying station.**

*1.* The relay box is registered in the relaying station.
   - Registering relay box No., relay password and relay group No.

*2.* Registration of group
   - Registering final destinations in the group No.

*3.* Transmission operation in the relay requesting station
   - Instructs relay box no. and relay password.

*4.* Transmission to the final remote stations registered in the group

*5.* Possible to printed relayed documents on the relaying station (depends on the parameter setting)

### (1) BOX specifications

| | |
|---|---|
| Relay box | Possible to register up to 5. |
| Relay box No. | Any box number that can range between 1 and 999999999 |
| Relay password | Any 8-digit number |
| Relay BOX name | To be assignable |
| Access protect No. | No |
| Final destination designation | Possible only to register in the relay box by appointing the group. |
| File erasure after transfer | Always erased |
| Conditions to erase box by operations | Only when there are no files of received messages in the relay box, box can be erased. |

### (2) Protocol sequence example

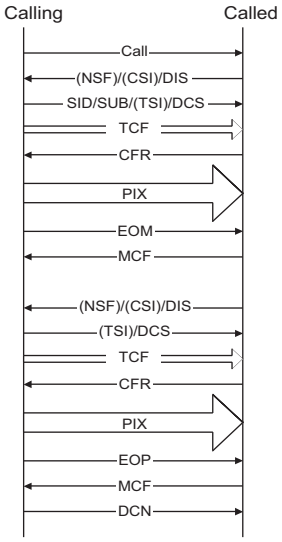


## 2.3 Transmission function

### 2.3.1 Original scan mode

- The original scan mode is roughly classified by the regular original scan and the irregular original scan.

| Regular original | Irregular original | Mode selection |
|---|---|---|
| Normal mode | Irregular mode | Default setting |
| Mixed original mode | | Scan setting |

#### (1) Scan mode default setting

- The scan mode can be set by [Service Mode] -> [FAX] -> [Line1] -> [System] -> [Scan Setting]. The default is the irregular mode.

| | Paper size detection | Default | Frame erasure |
|---|---|---|---|
| Irregular mode | Trailing edge detection | Yes | Trailing edge erasure may not be done. |
| Normal mode | DF paper size sensor | Automatically selected when using the page related application function (book transmission, etc.). | Frame erasure of all sides |

## 2.4 Reception function

### 2.4.1 Reduction / division of reception

- Parameters related to reduction / division are set on the [Administrator Settings] -> [Fax Settings] -> [TX/RX Settings]. There are two parameters as follows:
  - [Min. Reduction for RX Print]: 96, 95, 94, ..., 87: a
  - [Print Separate Fax Pages]: ON, OFF: b
- The reception recording mode is determined by the above-mentioned parameters, a and b.

#### (1) Auto reduction reception mode

- a = Don’t care (except 100)
- b = OFF
- The received documents are automatically reduced in the range of 35 to 96 %.

#### (2) Page division recording reception mode

- a = 96, 95, ..., 87
- b = ON
- Documents are reduced to three reduction rate (90 %, 86 %, or 82 %) determined by the width of received documents and the selected recording paper. When they are still larger than a paper size, they are reduced to a value in “a” for the division recording.
  - 90% = Fixed value
  - 86%, 82% = Reduction rate determined by the main scanning direction
- The paper selection and division are determined in accordance with the following figure.

### (3) Paper selected for division printing, magnification

#### (a) A4S width at reception

| Original length=Received original size*(1/a) | Optimum paper | Selected paper size / Division operation | | | | | | | |
|---|---|---|---|---|---|---|---|---|---|
| | | Priority 1 | Priority 2 | Priority 3 | Priority 4 | Priority 5 | Priority 6 | Priority 7 | Priority 8 |
| 152 mm or less | A5 | A5/a % | A5S/69 % | A4S/a % | A4/a % | B5S/84 % | B5/a % | B4/a % | A3/a % |
| 153 to 311 mm | A4S | A4S/a % | A4/a % | B4/a % | A3/a % | - | - | - | - |
| 312 to 384 mm | B4 | B4/a % | B5/a % | B5S/84 % | A3/a % | A4/a % | A4S/a % | - | - |
| Over 384 mm | A3 | A3/a % | A4/a % | B5S/84 % | - | - | - | - | - |

- a : Set magnification

#### (b) B4 width at reception

| Original length=Received original size*(1/a) | Optimum paper | Selected paper size / Division operation | | | | | | | |
|---|---|---|---|---|---|---|---|---|---|
| | | Priority 1 | Priority 2 | Priority 3 | Priority 4 | Priority 5 | Priority 6 | Priority 7 | Priority 8 |
| 189 mm or less | B5 | B5/a % | B5S/71 % | B4/a % | A4S/82 % | A4/a % | A3/a % | - | - |
| 189 to 384 mm | B4 | B4/a % | B5/a % | B5S/71 % | A3/a % | A4/a % | A4S/82 % | - | - |
| Over 384 mm | A3 | A3/a % | A4/a % | A4S/82 % | - | - | - | - | - |

- a : Set magnification

#### (c) A3 width at reception

| Original length=Received original size*(1/a) | Optimum paper | Selected paper size / Division operation | | | | | | | |
|---|---|---|---|---|---|---|---|---|---|
| | | Priority 1 | Priority 2 | Priority 3 | Priority 4 | Priority 5 | Priority 6 | Priority 7 | Priority 8 |
| 219 mm or less | A4 | A4/a % | A4S/69 % | B4/85 % | A3/a % | - | - | - | - |
| Over 219 mm | A3 | A3/a % | A4/a % | A4S/69 % | - | - | - | - | - |

- a : Set magnification

## 2.4.2 Cassette / paper selection

- The cassette and paper selection is performed by using two parameters of the [Administrator Settings] -> [Fax Settings] -> [TX/RX Settings].
  - [Print Paper Selection]: Auto Select, Fixed Size, Priority Size: a
  - [Tray Selection for RX Print]: Auto, Tray 1, Tray 2, Tray 3 and Tray 4: b

**NOTE**

- **When “b” is fixed to tray 1, 2, 3 or 4, “a” becomes invalid.**
- **Only when “b” is set to Auto, “a” becomes valid.**
- **Only A3, B4 and A4 sizes can be selected for the fixed size and preferential size modes.**
- **Bypass cannot be specified as fix-tray.**
- **Page dividing function becomes invalid when the tray is fixed.**

## 2.4.3 Compulsory memory reception

- The function to enable to print out by operations without printing out documents at reception in the FAX communications.

### (1) Related settings

#### (a) Compulsory memory reception function

- Set in the [Service Mode] -> [FAX] > [Line1] -> [System] -> [Display Setting].
- When this setting is set to “OFF”, display and actions related to the Compulsory memory reception are not performed. In addition, you can not perform operations. If this setting is not set, the following Compulsory memory reception function used is also set to disabled.

#### (b) Compulsory memory reception function use

- Set in the [Administrator Settings] -> [Fax Settings] -> [Function Settings] -> [Memory RX Setting].
- When this setting is set to “NO”, the compulsory memory reception actions are not performed at reception. In addition, you can not display, erase and print the compulsory memory reception documents. The compulsory memory reception documents are displayed on the main menu irrelevant to this setting.

#### (c) Compulsory memory reception password

- Within eight digits (0 to 9)
- Set in the [Administrator Settings] -> [Fax Settings] -> [Function Settings] -> [Memory RX Setting].
- This setting is required to display, delete or print the compulsory memory reception documents.

### (2) Operation

#### (a) Necessary conditions for this function

- When there is the compulsory memory reception function, and it is used, the compulsory memory reception action is performed.

#### (b) Line seizure

- It is possible to receive up to 500 compulsory memory reception jobs including the normal reception and the substitute reception. When 500 compulsory memory reception jobs are received, machine will not catch the line. (Except the case that the polled transmission documents and bulletin board documents are registered.)

#### (c) Reception

- When the reception is performed in the compulsory memory reception mode, printing is not performed even with recording paper and the reception is performed in memory as the compulsory memory reception documents.
- The same as in the polled reception and manual reception.
- The auto forwarding setting is neglected in this mode, and the compulsory memory reception is performed.
- When SUB is received, related applications will start.

#### (d) Setting change

- When there are received compulsory memory reception documents, even if the compulsory memory reception setting is set to invalid in the utility mode, the compulsory memory reception file is not printed.
- For printing, the compulsory memory reception setting is required to be set to “ON.”

## 2.4.4 Closed reception (Junk FAX)

- The closed reception function used only at the time of the reception by using the F-code SID signal.

**NOTE**

- **You can not use this function with the F-code communications.**

### (1) Closed reception function

- Set in the [Service Mode] -> [FAX] > [Line1] -> [System] -> [Display Setting].

### (2) Closed reception function use

- Set in the [Administrator Settings] -> [Fax Settings] -> [Function Settings] -> [Closed Network RX].
- When this setting is set to “No”, the closed reception actions are not performed at reception.

### (3) Closed reception password

- Four digits (0 to 9)
- Set in the [Administrator Settings] -> [Fax Settings] -> [Function Settings] -> [Closed Network RX].

# PM THEORY OF OPERATION HD-524

## 1. CONFIGURATION

### 1.1 Outline

- Executes mirroring (RAID 1) of 2 hard disks (hereafter: HDD). (A single HDD is installed as standard, the second is an optional addition)
- Prevents data loss by duplicating data on the HDD.
- Improves data safety/reliability through protecting customers important data from an unexpected failure. Furthermore, it reduces a downtime due to the HDD failure.

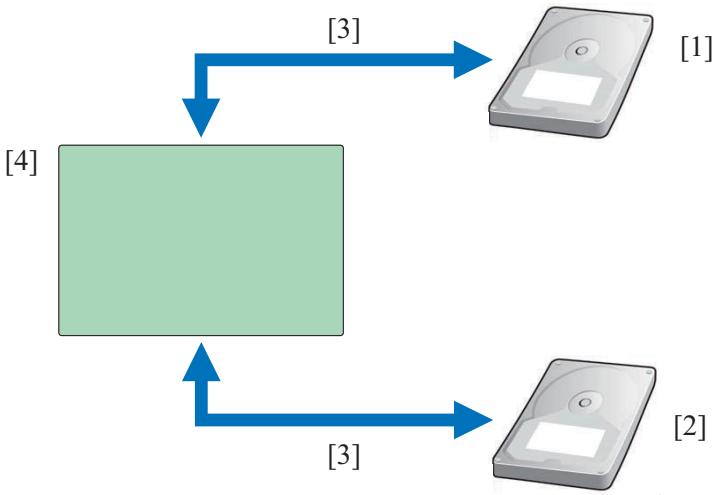


| | | | |
|---|---|---|---|
| [1] | HDD (A) (Master drive): 250 GB | [2] | HDD (B) (Slave drive): HD-524 250 GB |
| [3] | Job data | [4] | MFP board (MFPB) |

#### 1.1.1 About RAID 1

- RAID 1: Redundant Arrays of Independent Disks 1
- Simultaneously write identical data to 2 HDDs. This procedure is known as data mirroring (duplicating).
- If one HDD fails, the risk of the other HDD failing at the same time is minimal, therefore the MFP can continue operating.

**NOTE**

- **The added HD-524 (250 GB) does not change the data capacity same as the standard 250 GB HDD that can be stored on the HDD.**

### 1.2 Unit configuration

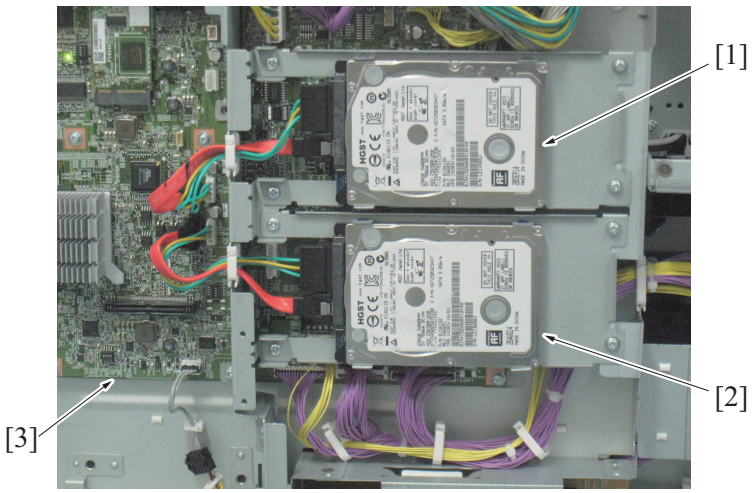


| | | | |
|---|---|---|---|
| [1] | HDD (A): Equipped as standard (Master drive) | [2] | HDD (B): HD-524 250 GB (Slave drive) |
| [3] | MFP board (MFPB) | - | - |

# 2. OPERATION

- At normal operation, a "Master Drive" is used when the machine reads out data and the "Slave Drive" is used on the backup-side.
- The master drive and the slave drive read out data simultaneously.
- When HD-524 is installed in the initial state, the standard equipped HDD (A) is specified as the master drive and HD-524 (B) as the slave drive.

## 2.1 HDD master/slave automatic switching control

- During correct HDD operation, the master drive and slave drive roles are locked.
- The slave drive automatically switches to the role of the master drive only during a restart when a master drive data read/write error (hereafter: R/W error) occurs.
- The machine operation can be continued or restarted without HDD data loss through accessing the drive that is switched to the new master drive.

Example: When an HDD (A) error occurs

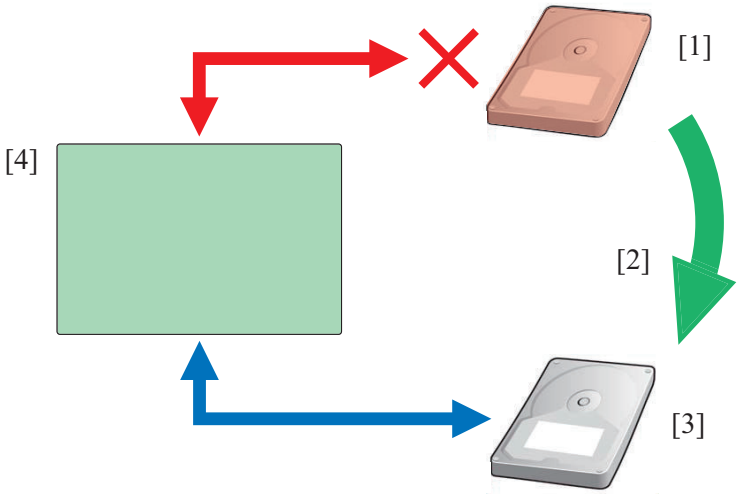


| | | | |
|---|---|---|---|
| [1] | HDD (A): R/W error occurs in the master drive | [2] | Switch the roles of master drive and slave drive |
| [3] | HDD (B): During normal operation (slave drive -> master drive) | [4] | MFP board (MFPB) |

## 2.2 HDD failure detection control

- When an R/W error occurs on either the master drive of slave drive, the trouble code (CFA14: Application error inside the MFP board) is displayed on the control panel and the current job forcibly terminates.
- Restart the machine, either of the trouble codes (CD013 to CD017) relating to HDD mirroring will be displayed.
- Restart the machine, the master drive will change over, which resets the trouble screen and enables execution of a job.
- See below for the actual content/function of each trouble code

**NOTE**

- **It requires to disconnect the machine power cable before the faulty HDD is attempting to be replaced. The replacement of the HDD is, however, enabled at a timing at which the machine does not execute a print job.**

HDD mirroring trouble codes

| Trouble code | Item | Outline |
|---|---|---|
| CD013 | HDD mirroring error master | A master drive R/W error has occurred during the mirroring operation. |
| CD014 | HDD mirroring error slave | A slave drive R/W error has occurred during the mirroring operation. |
| CD015 | HDD mirroring error master slave | An R/W error has occurred on both drives during the mirroring operation. |
| CD016 | HDD mirroring error master (rebuild) | A master drive R/W error has occurred during the HDD mirroring rebuilding. |
| CD017 | HDD mirroring error slave (rebuild) | A slave drive R/W error has occurred during the HDD mirroring rebuilding. |

- R/W error: Read error/Write error

### 2.2.1 A master drive error has occurred (CD013)

- After trouble code CD013 is displayed, turn the main power switch ON/OFF to switch the role of the master drive to the slave drive.
- Restart the machine, the job can be executed. A message prompting HDD replacement appears on the control panel.
- After the HDD is replaced, the message disappears when the rebuilding is completed.

### 2.2.2 A slave drive error has occurred (CD014)

- After trouble code CD014 is displayed, turn the main power switch ON/OFF to restart the machine and execute the job.
- A message prompting HDD replacement appears on the control panel.
- After the HDD is replaced, the message disappears when the rebuilding is completed.

### 2.2.3 A master-slave drive error has occurred (CD015)

- Trouble code CD015 indicates both HDDs have failed at the same time and both HDDs require replacement. (HDD data loss)
- After replacement of both HDDs, HDD formatting (physical + logical formatting) and video data installation are required.

- If the HDD data has been previously backed up, after replacement of the HDD, the data on the HDD can be recovered through implementing [HDD Data Backup/Restore].

### 2.2.4 A master drive error has occurred during the HDD mirroring rebuilding (CD016)

- If an R/W error occurs while the master drive is being rebuilt, the trouble code is displayed on the control panel and rebuilding is suspended.
- Before completion of rebuilding, due to a master drive error data is not correctly copied to the slave drive. It requires to replace the master drive. (HDD data loss)
- After replacement of the master drive, HDD formatting (physical + logical formatting) and video data installation are required.
- If the HDD data has been previously backed up, after replacement of the HDD, the data on the HDD can be recovered through implementing [HDD Data Backup/Restore].

### 2.2.5 A slave drive error occurred during the HDD mirroring rebuilding (CD017)

- If an R/W error occurs while the slave drive is being rebuilt, the trouble code is displayed on the control panel and rebuilding is suspended.
- After trouble code CD017 is displayed, turn the main power switch ON/OFF to restart the machine and execute the job.
- A message indicating an on-going rebuilding appears on the control panel.
- After the HDD is replaced, the message disappears when the rebuilding is completed.

## 2.3 HDD mirroring rebuild

- HDD mirroring rebuilding represents a process to duplicate all data in the master drive onto the slave drive. (hereafter: rebuilding)
- When an HD-524 is newly installed, or an HDD error occurs and it is replaced with a new HD-524, it requires rebuilding from Service Mode.
  [Service Mode] -> [State Confirmation] -> [Memory/Storage Adjustment] -> [HDD Mirroring Rebuild]
  **NOTE**
  - **Approximately 1 hour is required for rebuilding.**
  - **Never turn off the main power switch, disconnect the power cord during rebuilding.**
  - **During a rebuilding, do not pause or force-quit until rebuilding is completed.**
  - **Jobs can be executed even during rebuilding. However, during a job access performance to the HDD is reduced to approx. 40%. Therefore, it also takes a longer time to complete rebuilding. (The rebuilding speed is lowered without slowing the job processing speed)**
  - **The HDD operating status and rebuilding progress can be confirmed with [Service Mode] -> [State Confirmation] -> [Memory/Storage status].**

### 2.3.1 Example: When HDD (B) is installed and rebuilding is executed

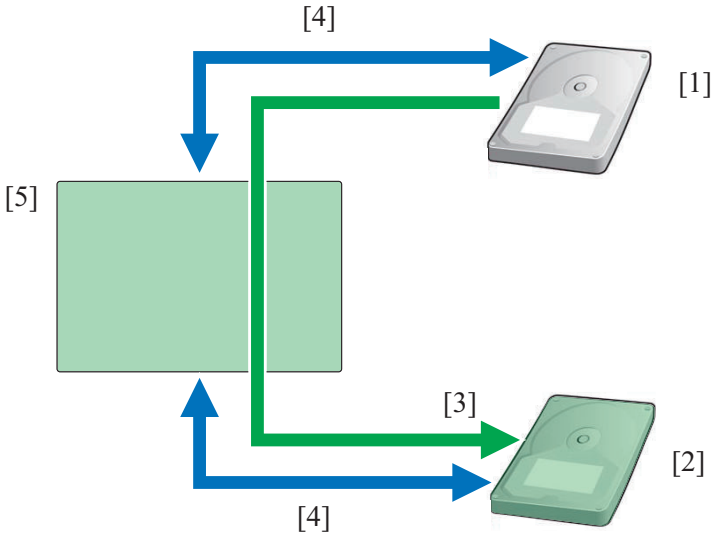


| | | | |
|---|---|---|---|
| [1] | HDD (A): During normal operation (Master drive) | [2] | HDD (B): HD-524 (Slave drive) added |
| [3] | Duplicate all data in HDD (A) onto HDD (B) | [4] | Job data |
| [5] | MFP board (MFPB) | - | - |

### 2.3.2 Example: When an HDD (A) R/W error occurs and HDD is replaced

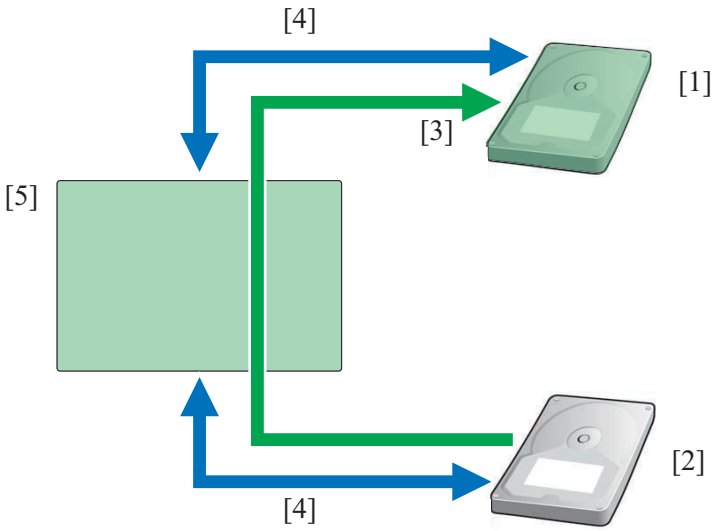


| | | | |
|---|---|---|---|
| [1] | HDD (A): Replaced HD-524 (Slave drive) | [2] | HDD (B): During normal operation (Master drive) |
| [3] | Duplicate all data in HDD (B) onto HDD (A) | [4] | Job data |
| [5] | MFP board (MFPB) | - | - |

## 2.4 Format HDD

- At the time of executing HDD format with HD-524 has been installed, both HDD (A) and HDD (B) are formatted.
  **NOTE**
  - **No data exists on the slave drive. Caution is required at the time of formatting the HDD.**
  - **When it is used together with the HDD Data Backup security settings, data can be recovered to the formatted HDD. It requires to backup the HDD data before the HDD is formatted.**

# PN THEORY OF OPERATION CU-101/MK-745

## 1. CONFIGURATION

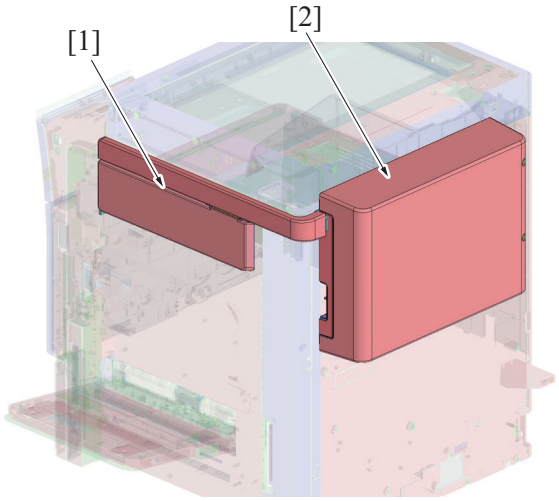


| | | | |
|---|---|---|---|
| [1] | Duct (MK-745) | [2] | Clean Unit (CU-101) |

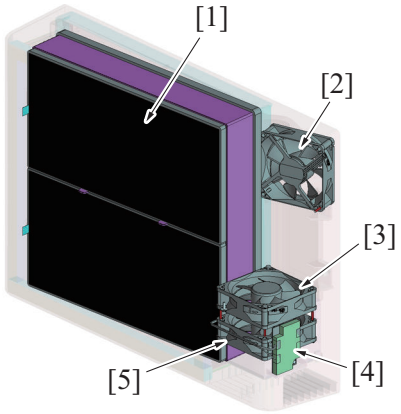


| | | | |
|---|---|---|---|
| [1] | UFP filter, deodorant filter | [2] | Suction fan (FM16) * |
| [3] | Exhaust fan/1 (FM14) | [4] | Clean unit drive board (CUDB) |
| [5] | Exhaust fan/2 (FM15) | - | - |

- *: Fan that is supplied with MK-745

# 2. OPERATION

## 2.1 Exhaust control

- The exhaust control collects ultrafine particles (UFP) and odor discharged from the machine into the clean unit using the UFP filter and deodorant filter and transports cleaner air to the outside of the machine.
  **NOTE**
  - **The UFP filter and deodorant filter are not replaced periodically.**

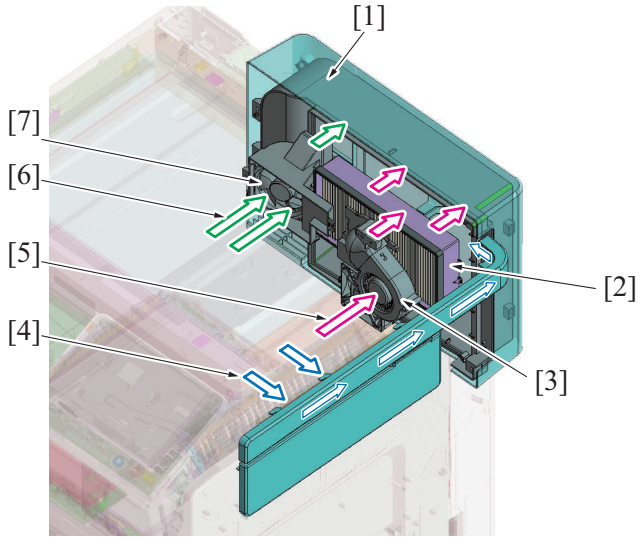


| | | | |
|---|---|---|---|
| [1] | Clean unit | [2] | UFP filter (main body) |
| [3] | Paper cooling fan (main body: FM8) | [4] | Air route of the duct (MK-745) |
| [5] | Air route of the paper cooling fan | [6] | Air route of the suction fan |
| [7] | Suction fan (MK-745: FM16) | - | - |

## 2.2 Filter configuration

- Two types of filters are present inside the clean unit.
- The UFP filter removes ultrafine particles (UFP) while the deodorant filter removes odor.

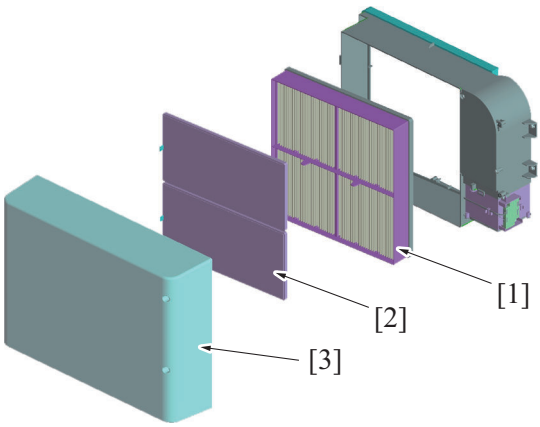


| | | | |
|---|---|---|---|
| [1] | UFP filter | [2] | Deodorant filter |
| [3] | Exterior cover | - | - |

## 2.3 Airflow

- Air that is exhausted with the paper cooling fan and the suction fan of the machine is taken into the clean unit.
- The exhaust fan/1 and exhaust fan/2 exhaust the sucked air outside the machine via the UFP filter and the deodorant filter.

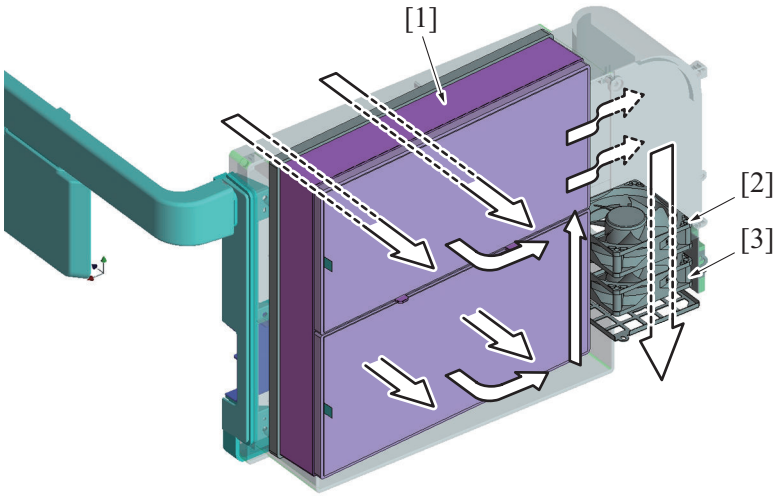


| | | | |
|---|---|---|---|
| [1] | UFP filter, deodorant filter | [2] | Exhaust fan/1 (FM14) |
| [3] | Exhaust fan/2 (FM15) | - | - |

## 2.4 Operation timing

- The suction fan, exhaust fan/1, and exhaust fan/2 are driven at the same time that the paper cooling fan (FM8) of the machine is driven.
- If a clean unit is installed, perform the installation settings. [Service Mode] -> [System 2] -> [Cleaning Unit Setting]

| | At warm-up | During stand-by | During a print cycle |
|---|---|---|---|
| Suction fan | Full speed | Stop | Full speed |
| Exhaust fan/1 | | | |
| Exhaust fan/2 | | | |

# S LAYOUT DRAWINGS FOR RELATED PARTS BY EACH TROUBLE CODE

## 1. C0002

PARTS LAYOUT DRAWING/1

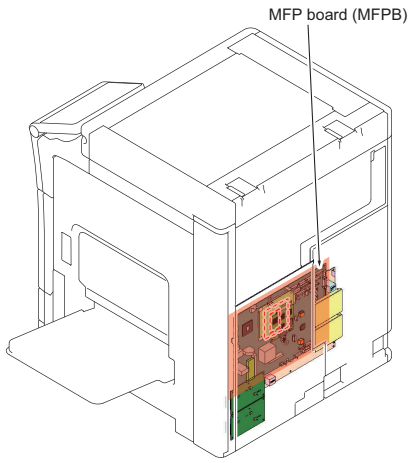


PARTS LAYOUT DRAWING/2 [PC-110, PC-210]

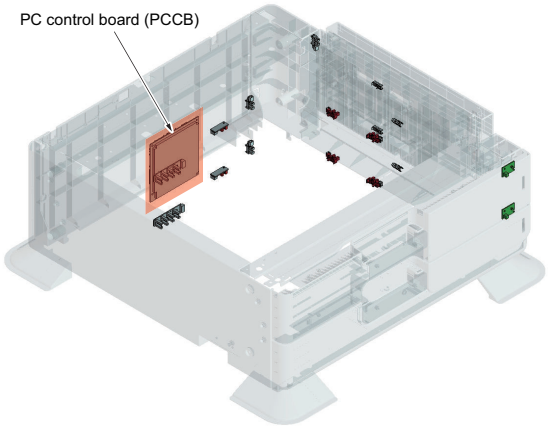


PARTS LAYOUT DRAWING/3 [PC-410]

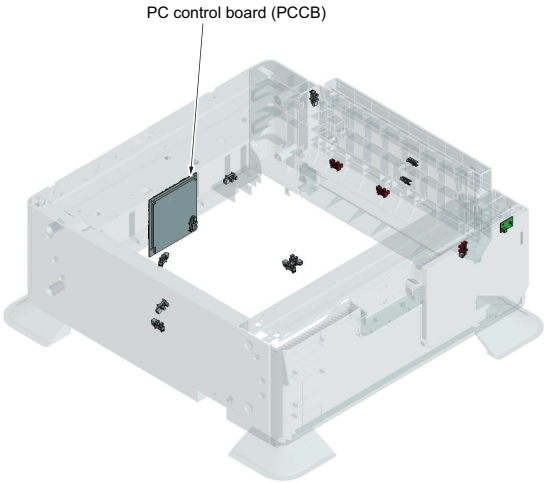

# 2. C0106

## 2.1 PC-110/PC-210

PARTS LAYOUT DRAWING/1

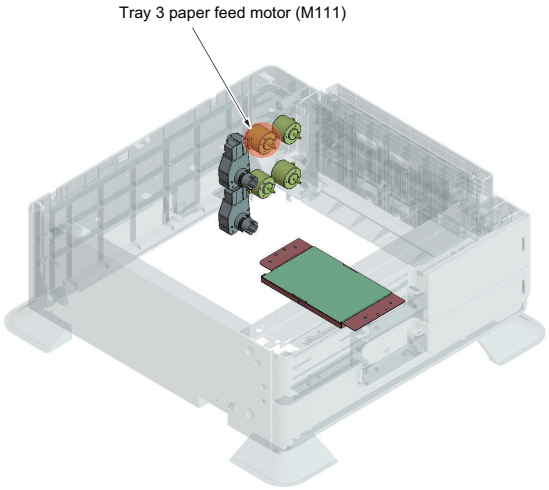


PARTS LAYOUT DRAWING/2

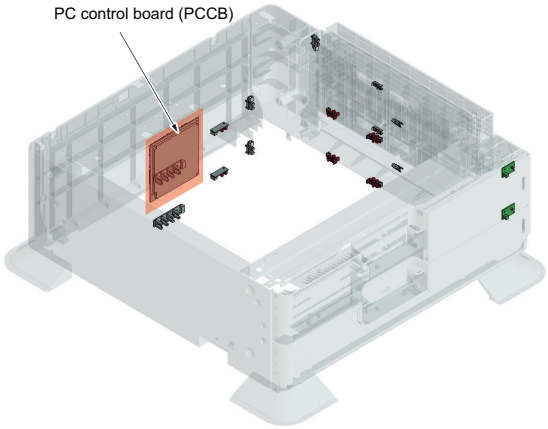


BOARD CONNECTOR LAYOUT DRAWING (PCCB) [PC-110]

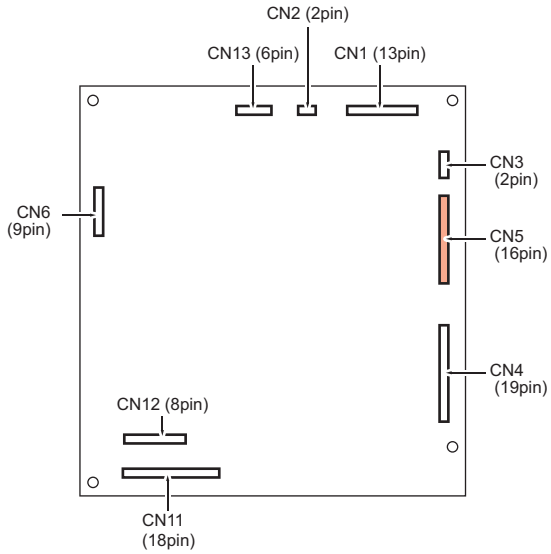


BOARD CONNECTOR LAYOUT DRAWING (PCCB) [PC-210]

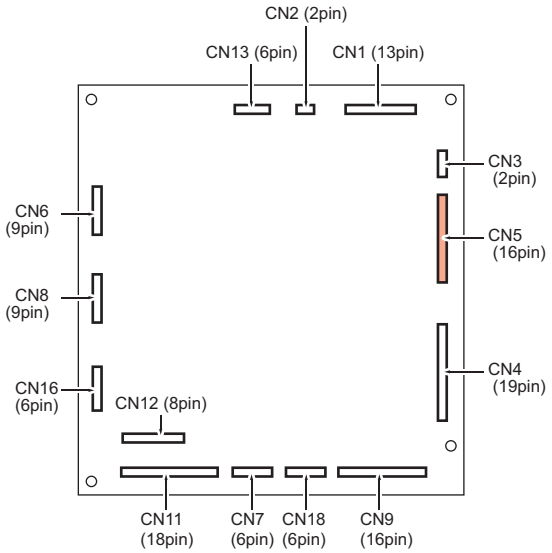


WIRING DIAGRAM

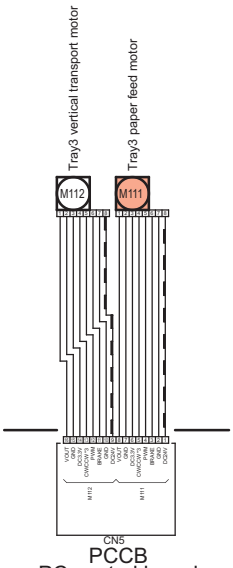

## 2.2 PC-410

PARTS LAYOUT DRAWING/1

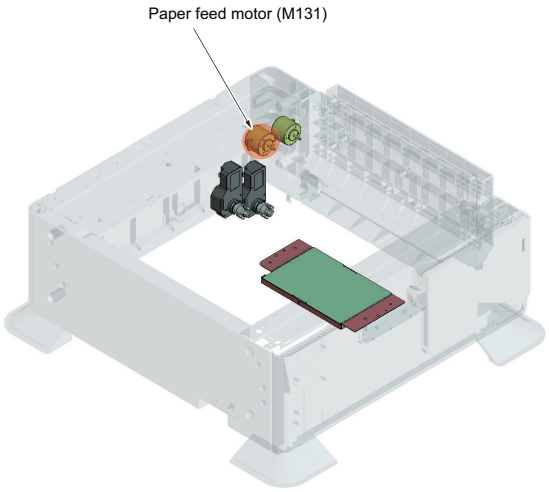


PARTS LAYOUT DRAWING/2

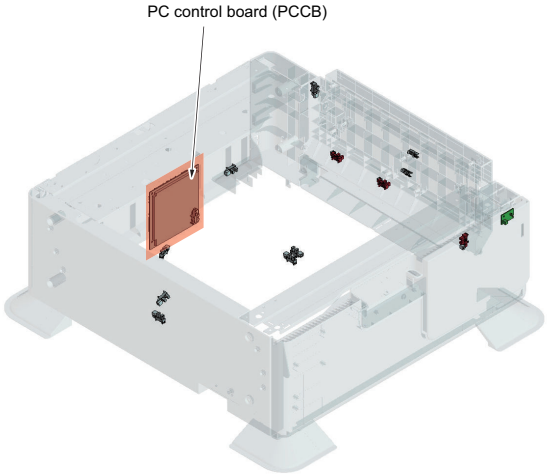


BOARD CONNECTOR LAYOUT DRAWING (PCCB)

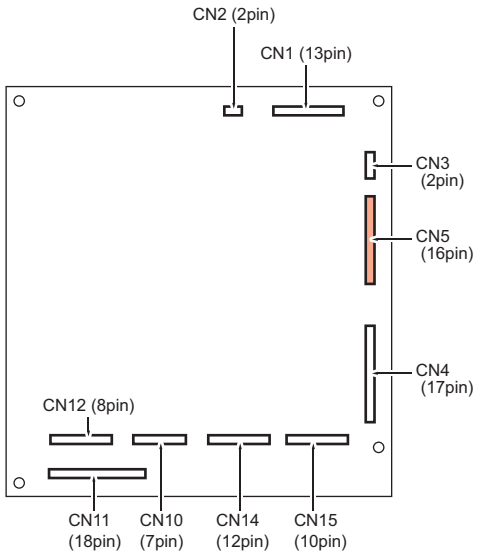


WIRING DIAGRAM

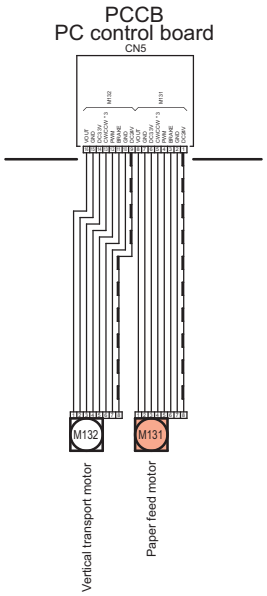

# 3. C0107

## 3.1 PC-110/PC-210

PARTS LAYOUT DRAWING/1

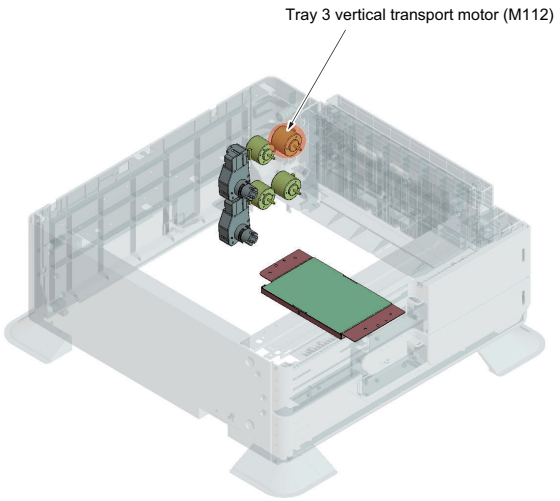


PARTS LAYOUT DRAWING/2

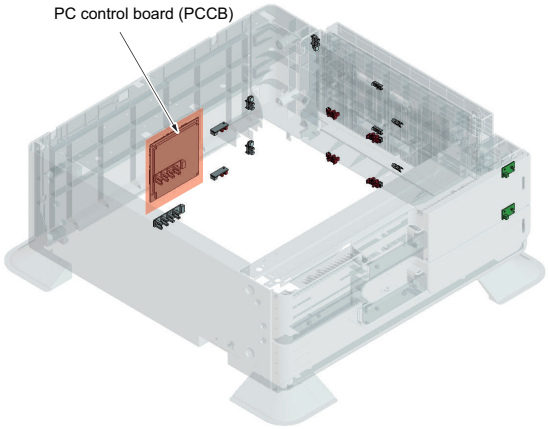


BOARD CONNECTOR LAYOUT DRAWING (PCCB) [PC-110]

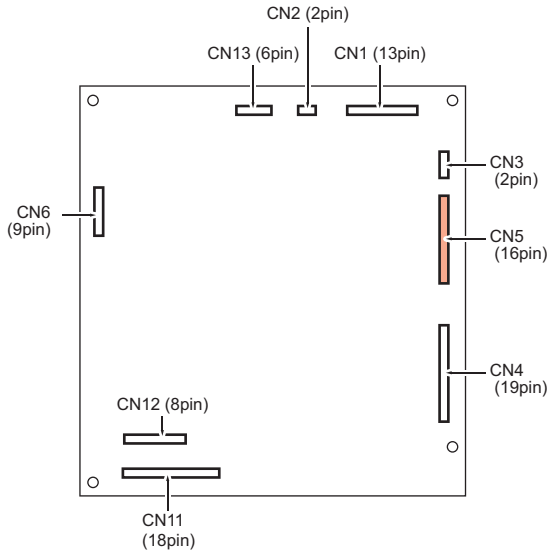


BOARD CONNECTOR LAYOUT DRAWING (PCCB) [PC-210]

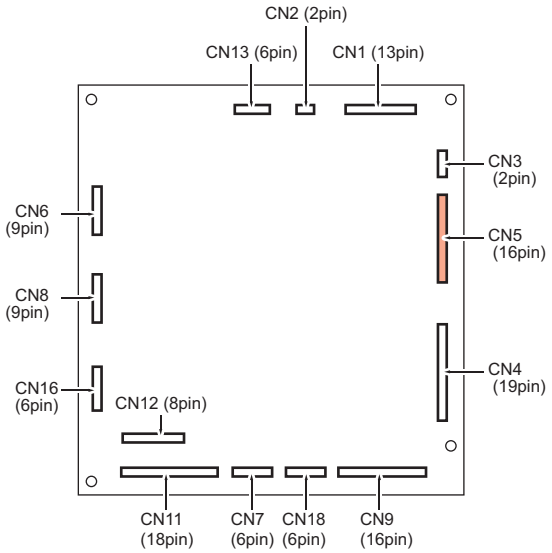


WIRING DIAGRAM

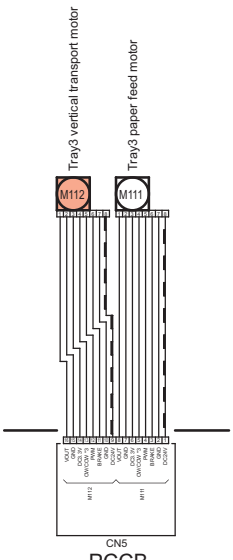

## 3.2 PC-410

PARTS LAYOUT DRAWING/1

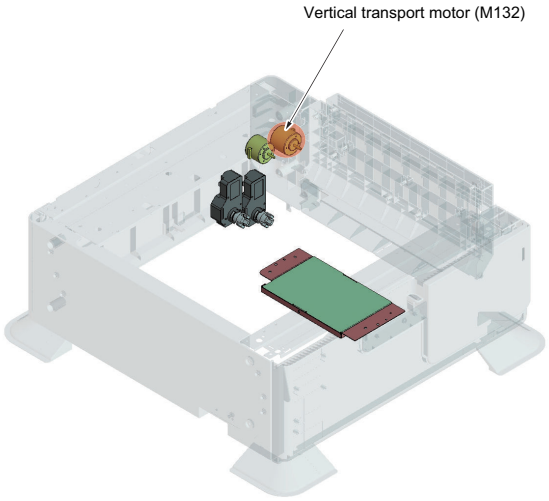


PARTS LAYOUT DRAWING/2

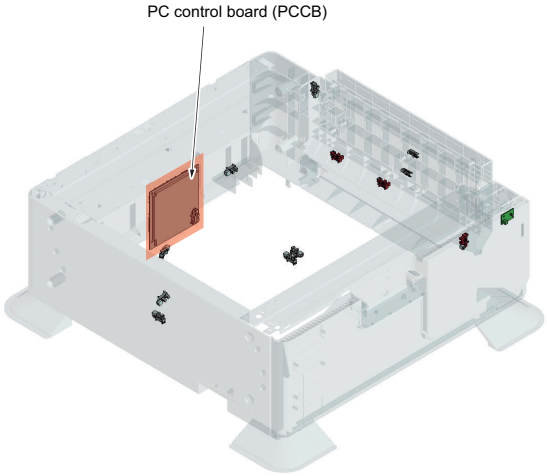


BOARD CONNECTOR LAYOUT DRAWING (PCCB)

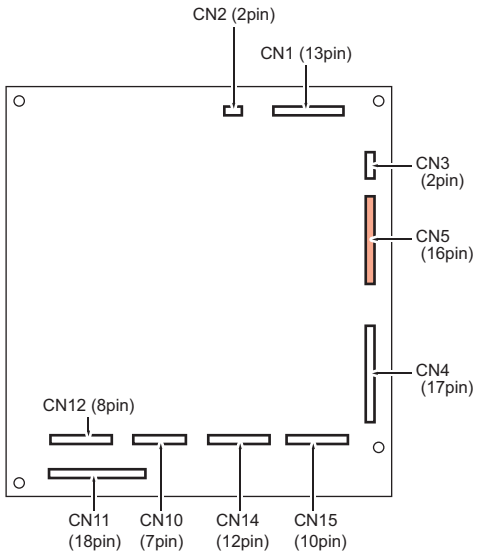


WIRING DIAGRAM

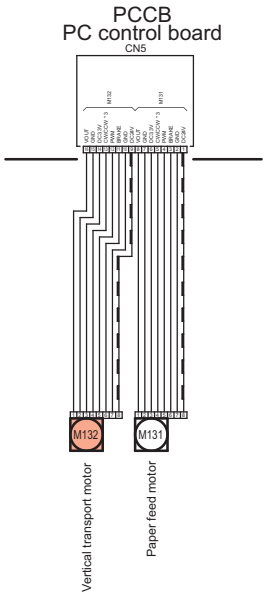

# 4. C0108

PARTS LAYOUT DRAWING/1

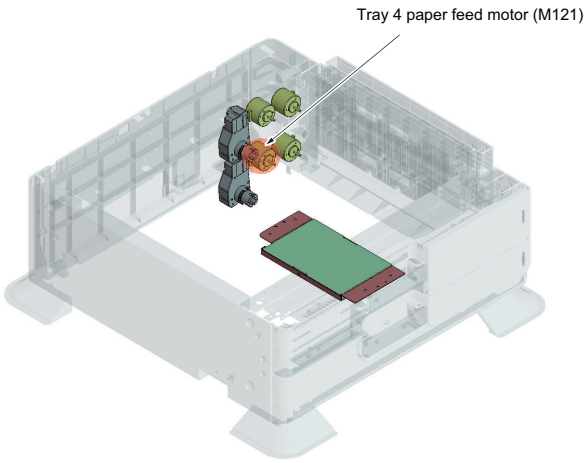


PARTS LAYOUT DRAWING/2

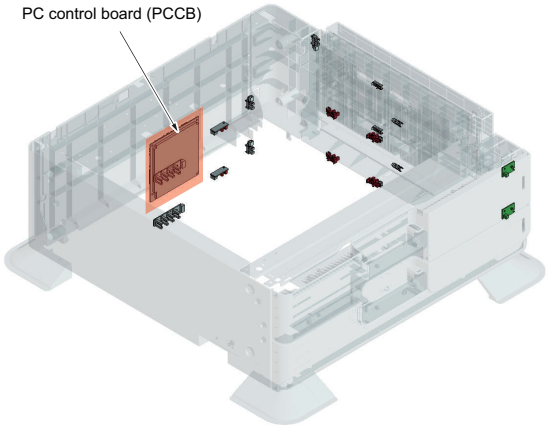


BOARD CONNECTOR LAYOUT DRAWING (PCCB)

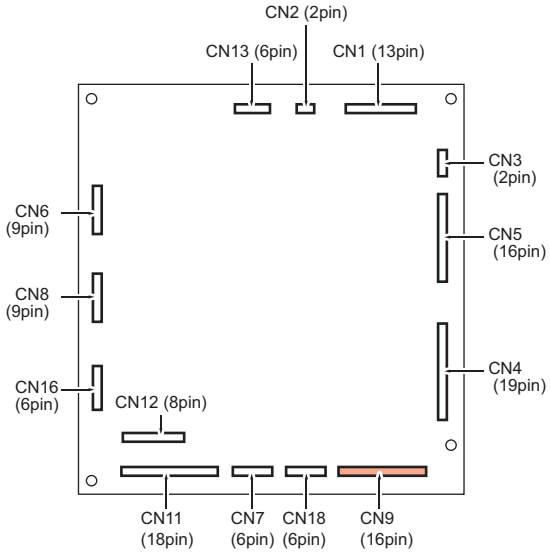


WIRING DIAGRAM

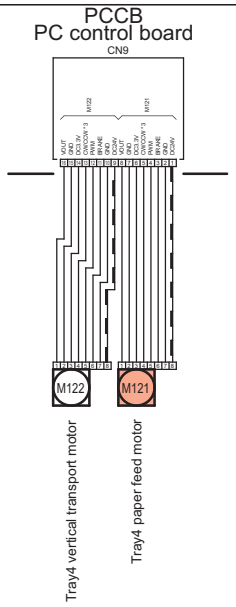

# 5. C0109

PARTS LAYOUT DRAWING/1

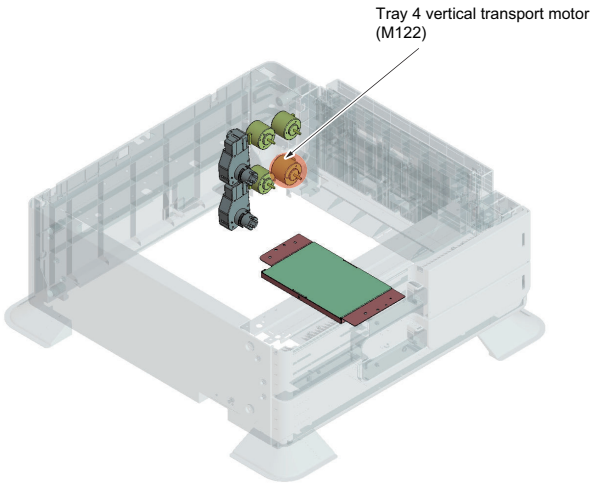


PARTS LAYOUT DRAWING/2

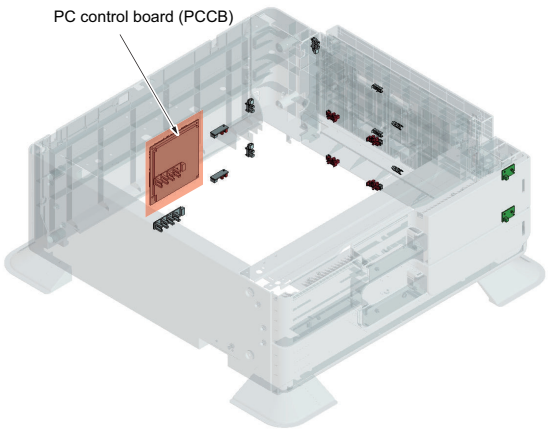


BOARD CONNECTOR LAYOUT DRAWING (PCCB)

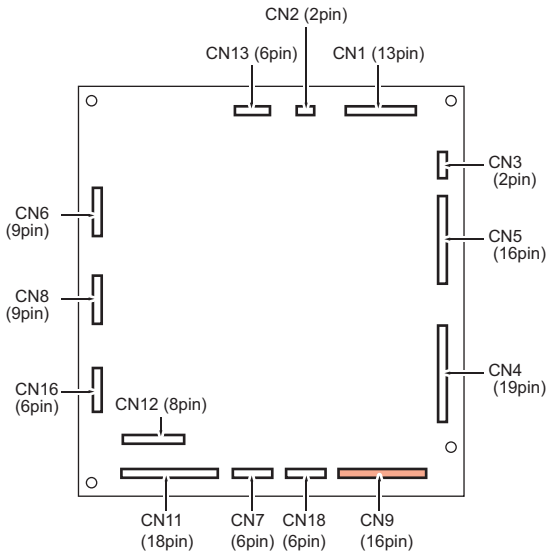


WIRING DIAGRAM

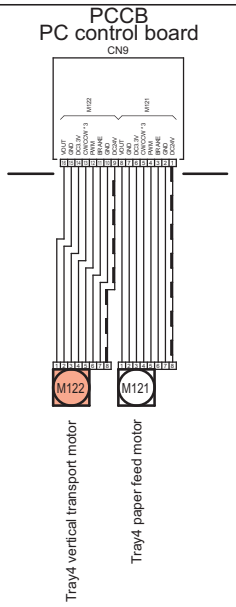

# 6. C0202

## PARTS LAYOUT DRAWING/1

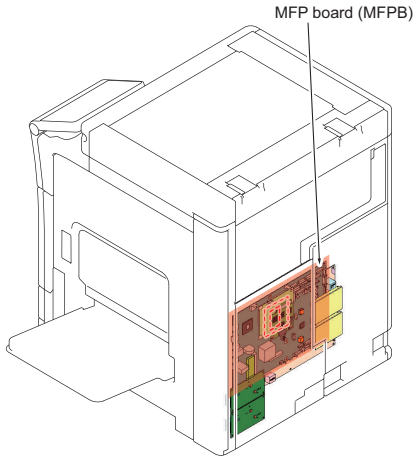


## PARTS LAYOUT DRAWING/2

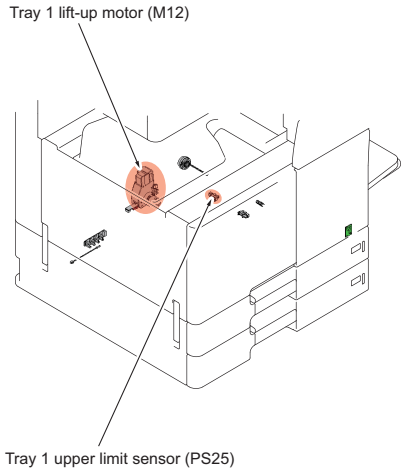


## BOARD CONNECTOR LAYOUT DRAWING (MFPB)

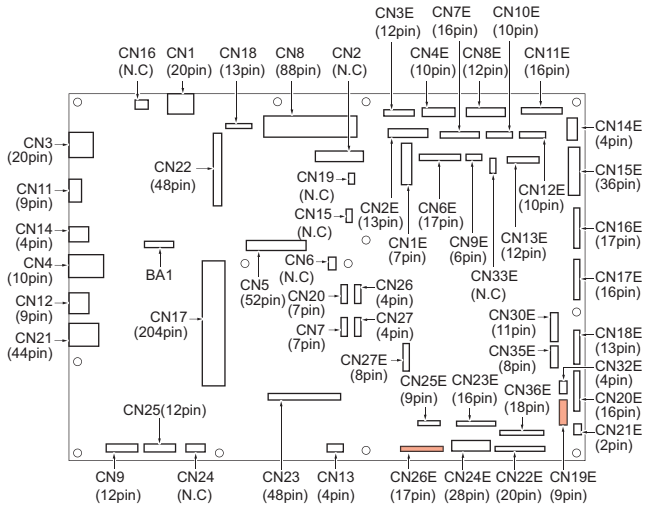


## WIRING DIAGRAM

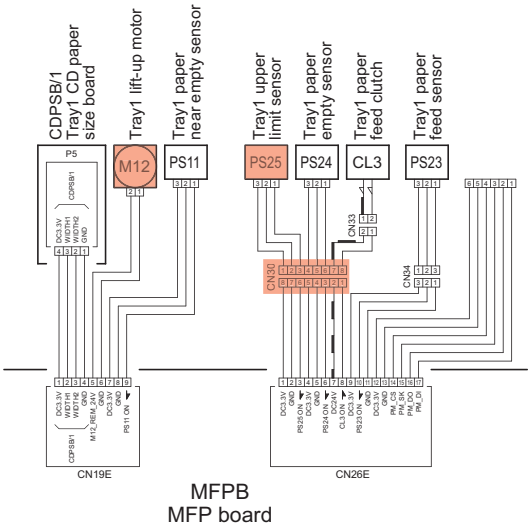


## RELAY CONNECTOR LAYOUT DRAWING

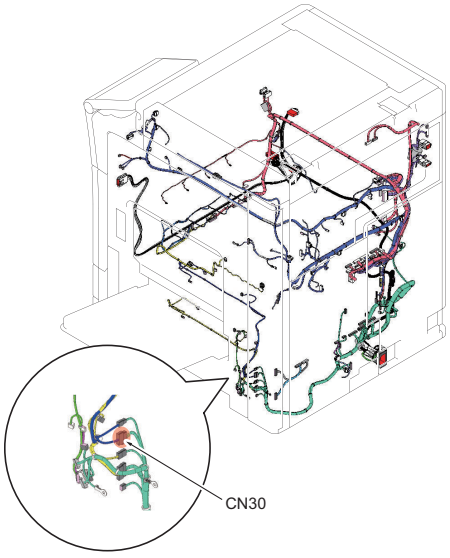

# 7. C0204

## PARTS LAYOUT DRAWING/1

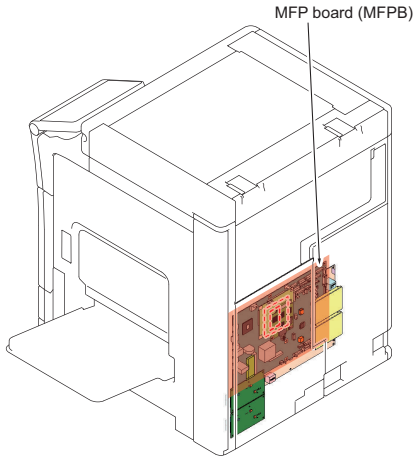


## PARTS LAYOUT DRAWING/2

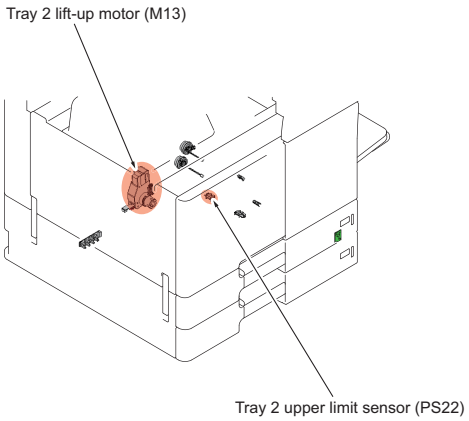


## BOARD CONNECTOR LAYOUT DRAWING (MFPB)

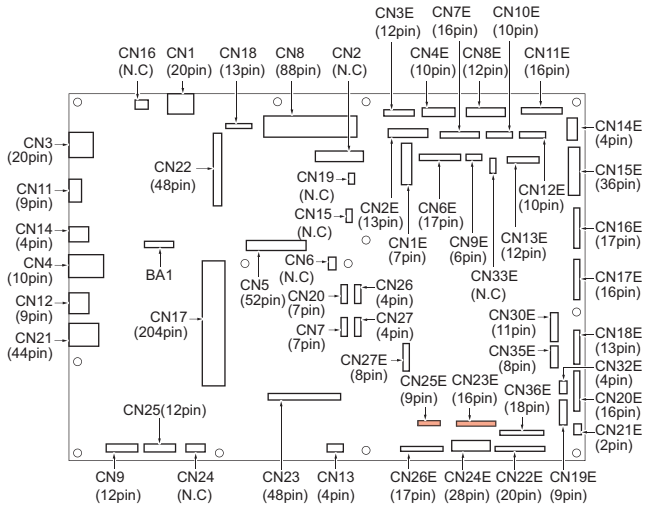


## WIRING DIAGRAM

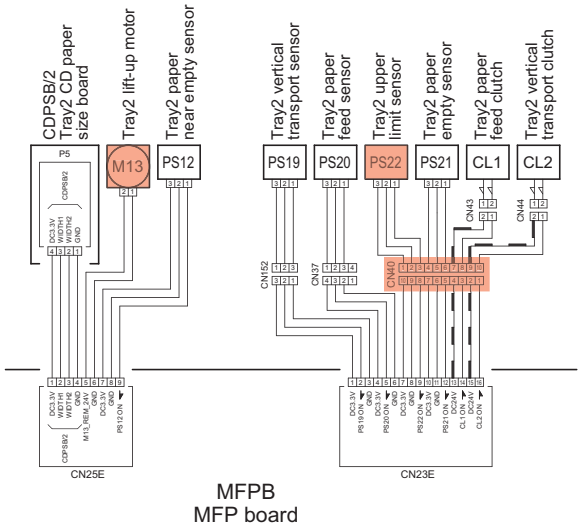


## RELAY CONNECTOR LAYOUT DRAWING

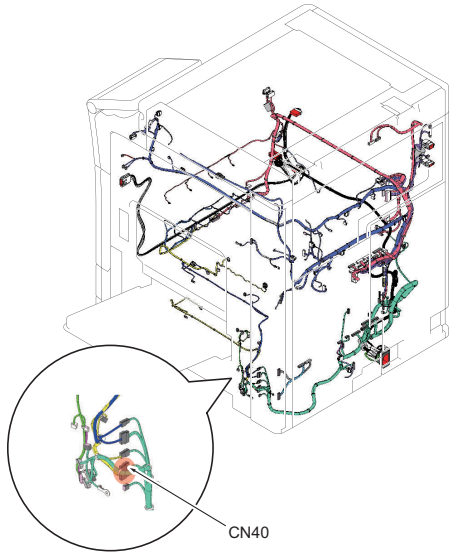

# 8. C0206

## PARTS LAYOUT DRAWING/1

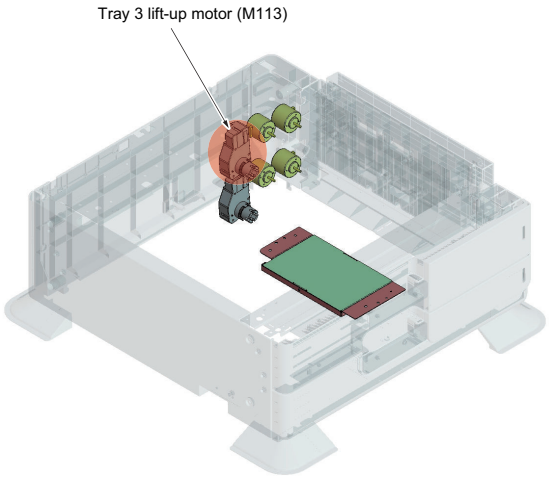


## PARTS LAYOUT DRAWING/2

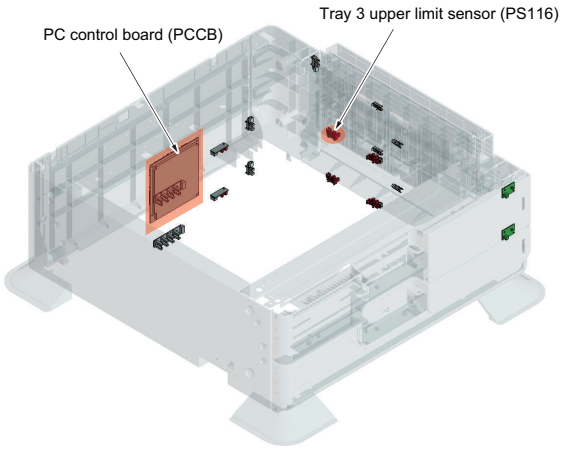


## PARTS LAYOUT DRAWING/3

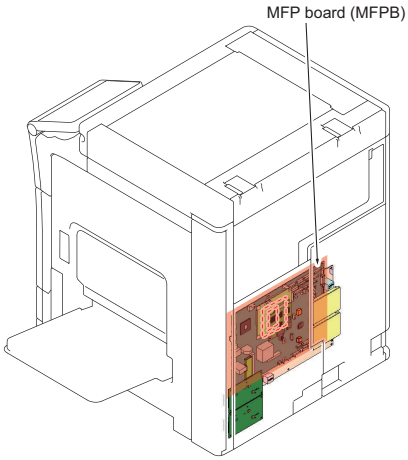


## BOARD CONNECTOR LAYOUT DRAWING (PCCB) [PC-110]

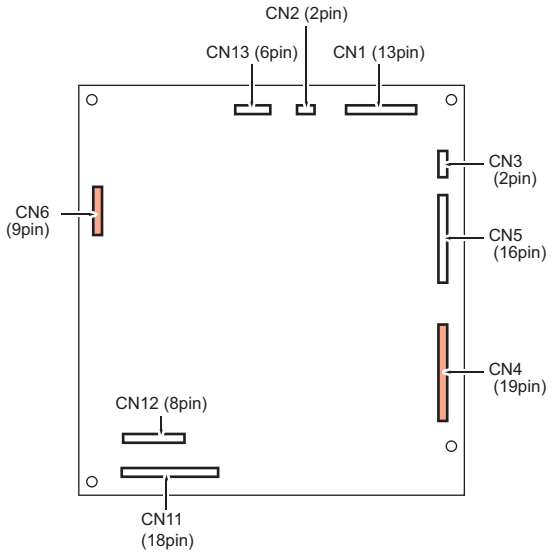


## BOARD CONNECTOR LAYOUT DRAWING (PCCB) [PC-210]

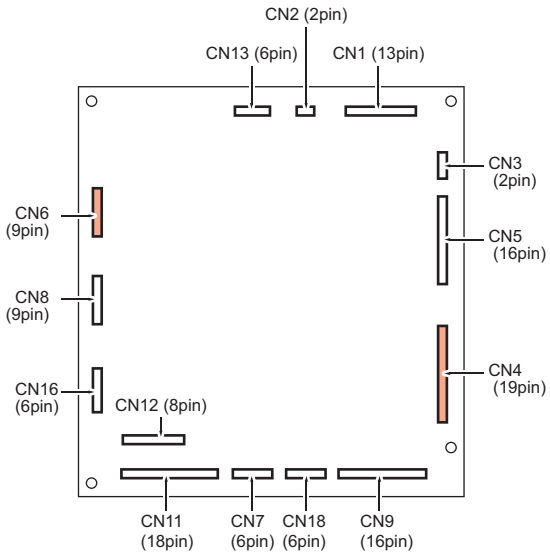


## WIRING DIAGRAM

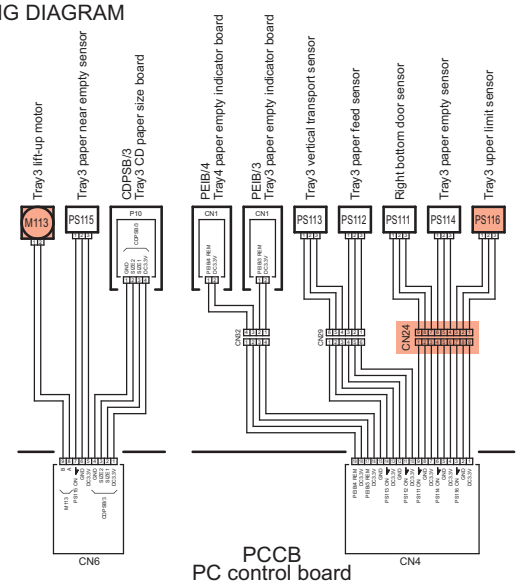

# 9. C0208

## PARTS LAYOUT DRAWING/1

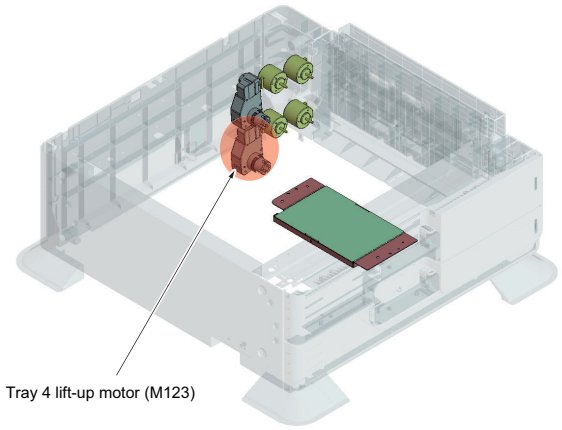


## PARTS LAYOUT DRAWING/2

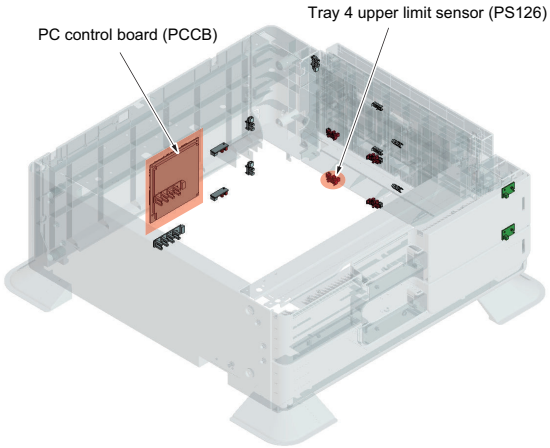


## PARTS LAYOUT DRAWING/3

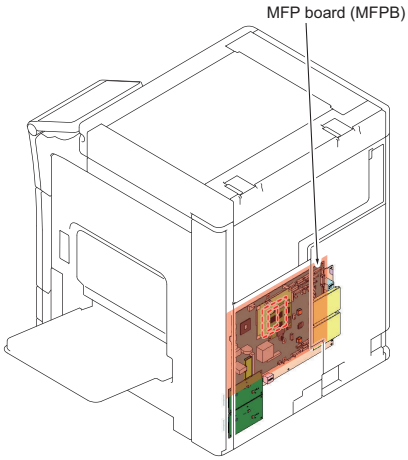


## BOARD CONNECTOR LAYOUT DRAWING (PCCB)

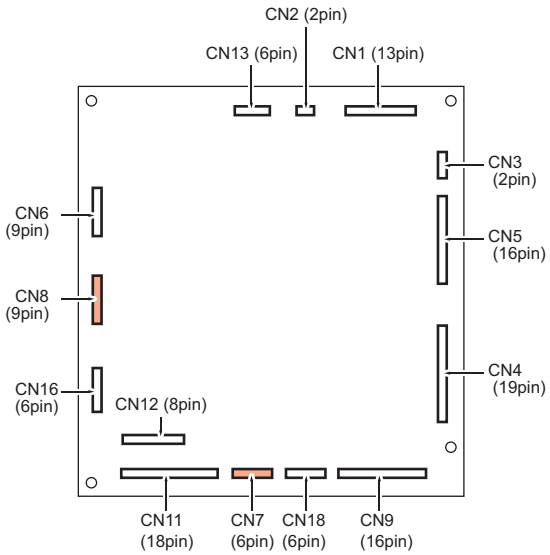


## WIRING DIAGRAM

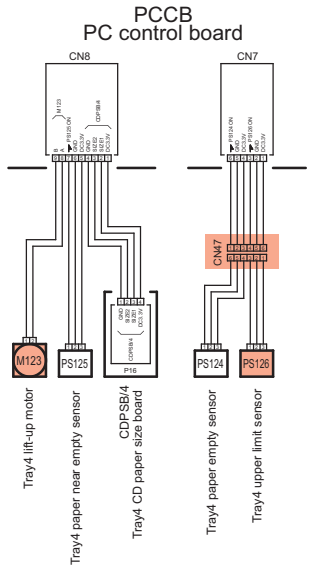

# 10. C0210

## PARTS LAYOUT DRAWING/1

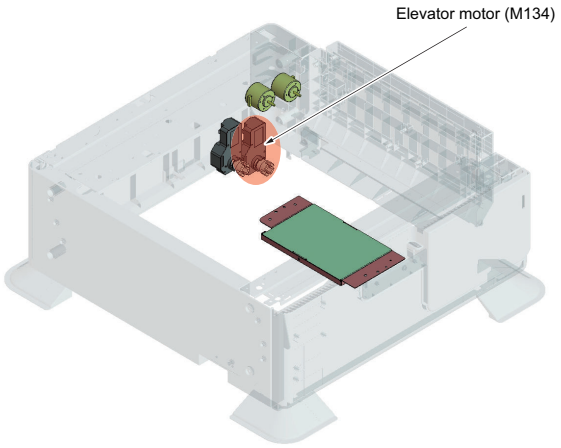


## PARTS LAYOUT DRAWING/2

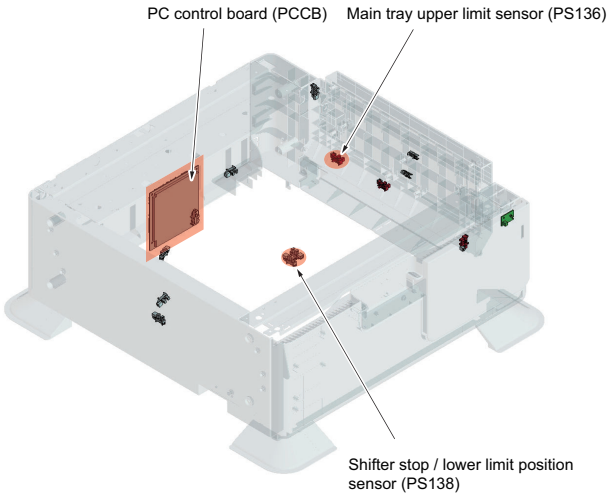


## BOARD CONNECTOR LAYOUT DRAWING (PCCB)

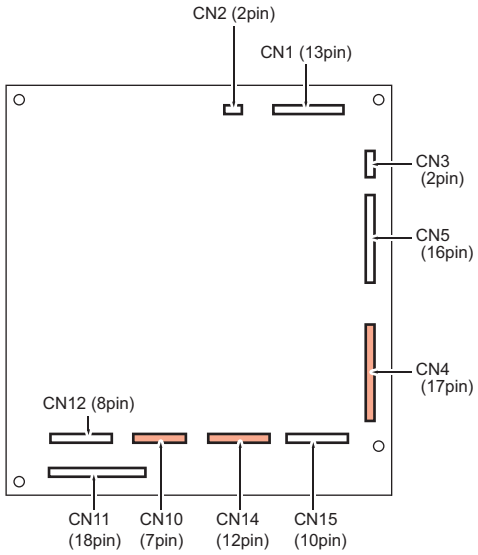


## WIRING DIAGRAM

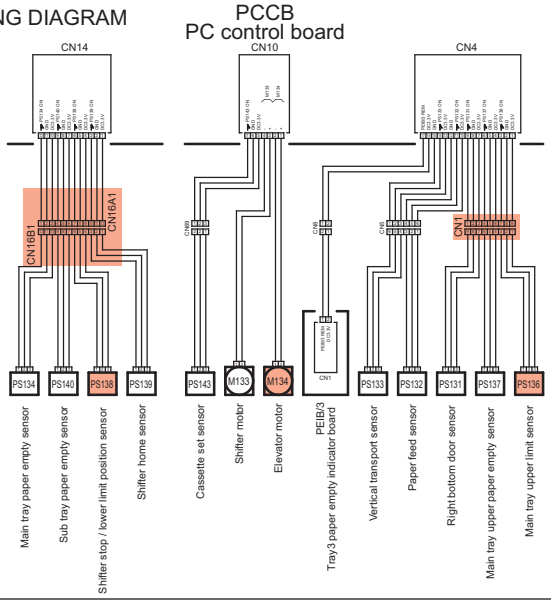

# 11. C0211

## PARTS LAYOUT DRAWING/1

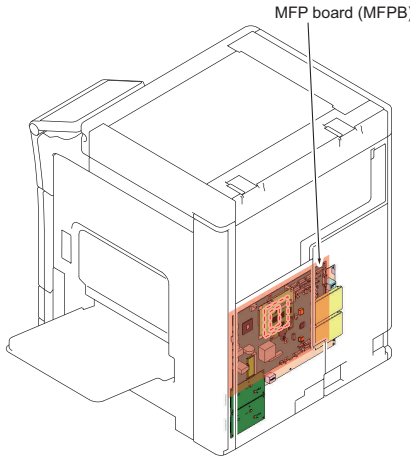


## PARTS LAYOUT DRAWING/2

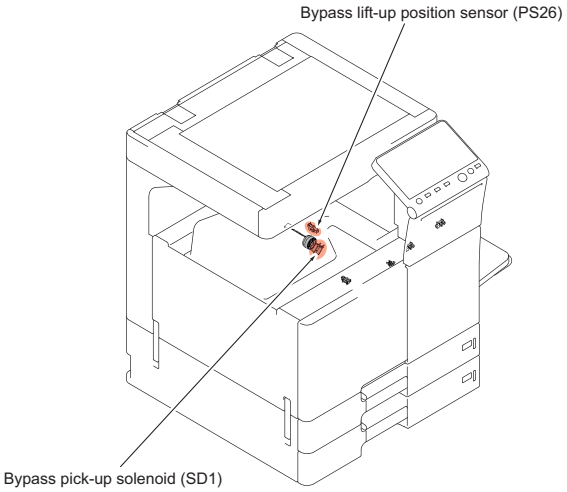


## PARTS LAYOUT DRAWING/3

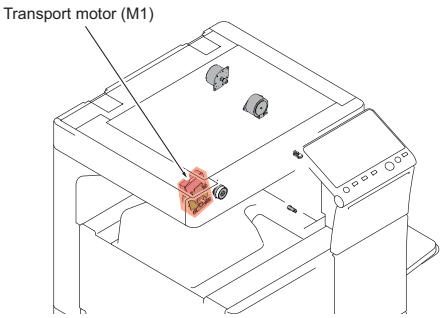


## BOARD CONNECTOR LAYOUT DRAWING (MFPB)

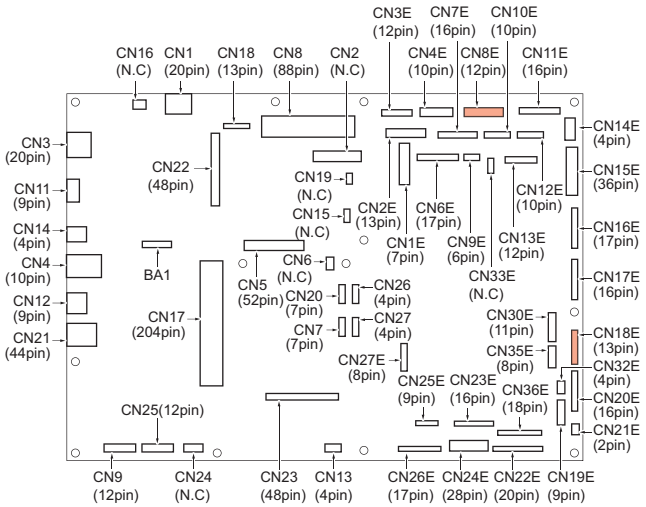


## WIRING DIAGRAM

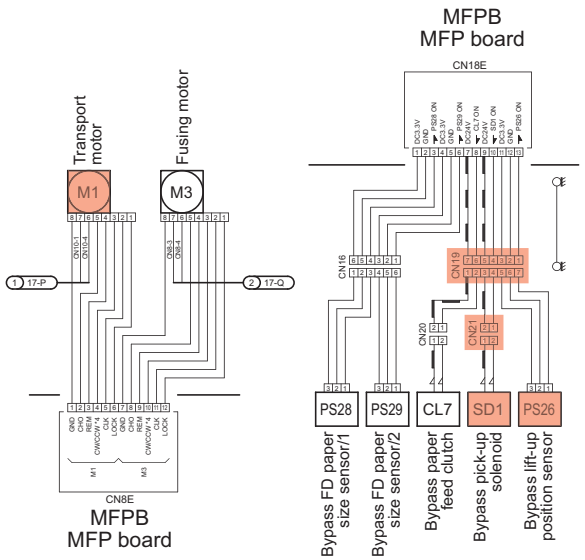


## RELAY CONNECTOR LAYOUT DRAWING

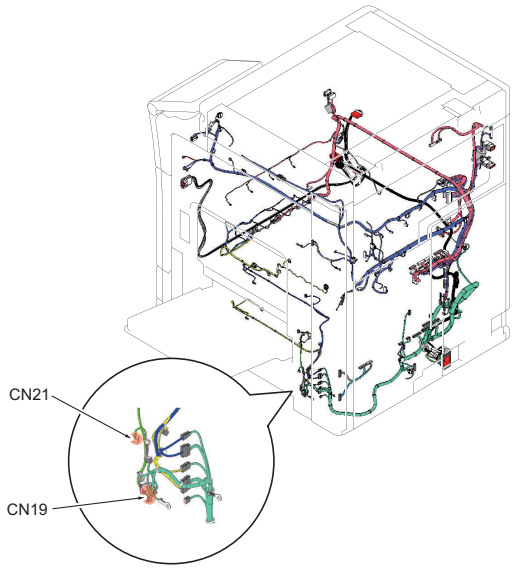

# 12. C0214

## PARTS LAYOUT DRAWING/1

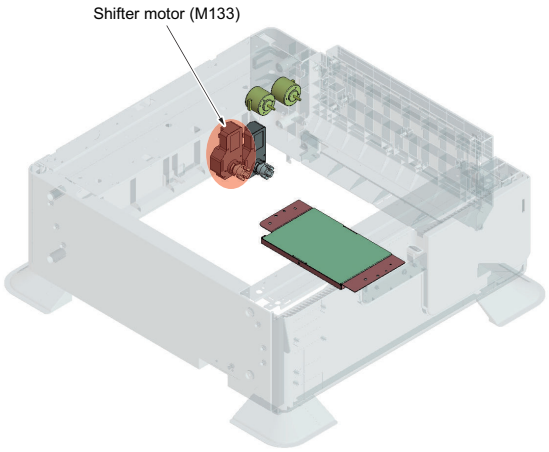


## PARTS LAYOUT DRAWING/2

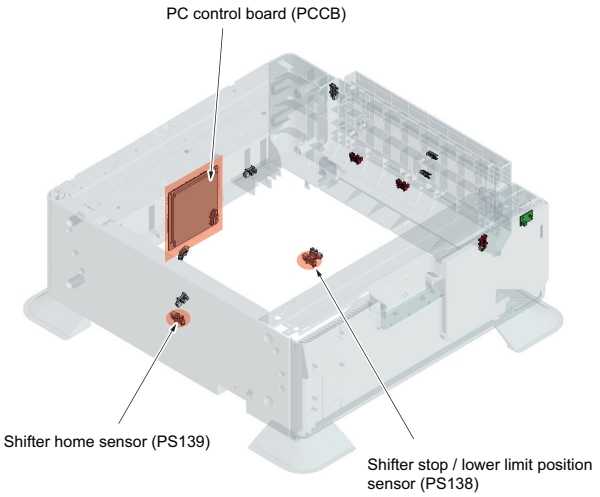


## BOARD CONNECTOR LAYOUT DRAWING (PCCB)

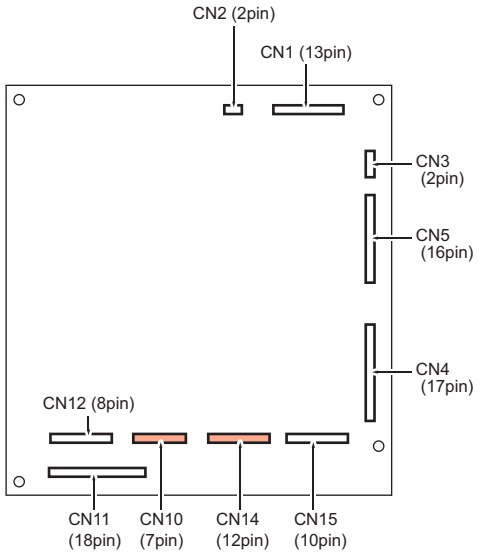


## WIRING DIAGRAM

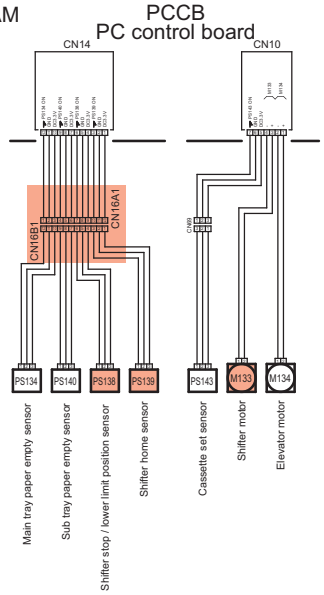

# 13. C0216

PARTS LAYOUT DRAWING

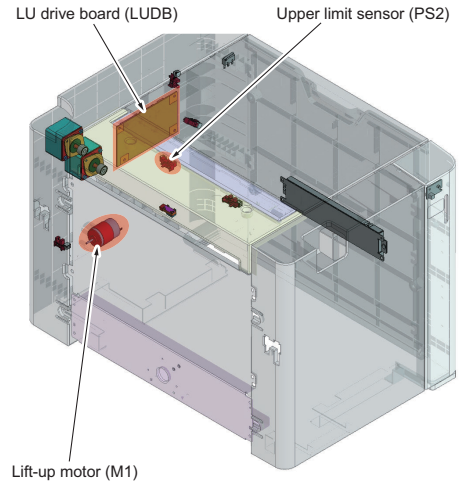


BOARD CONNECTOR LAYOUT DRAWING (LUDB)

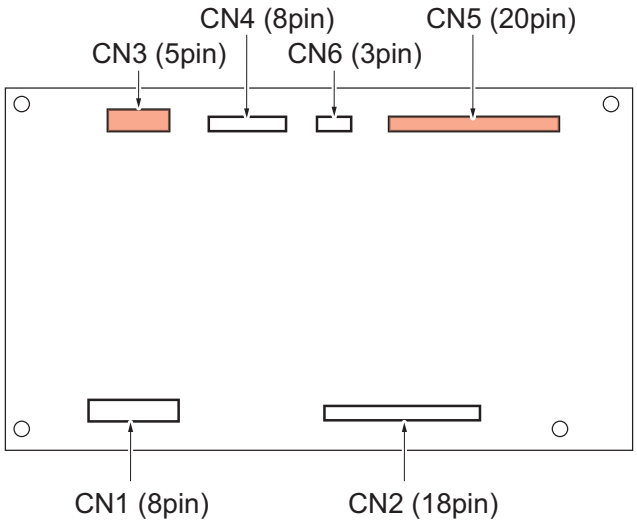


WIRING DIAGRAM

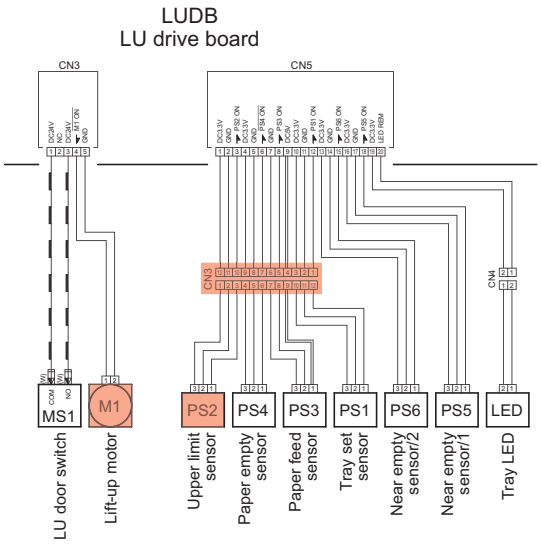

# 14. C1004, CC155, CD704

PARTS LAYOUT DRAWING/1 [FS-533]

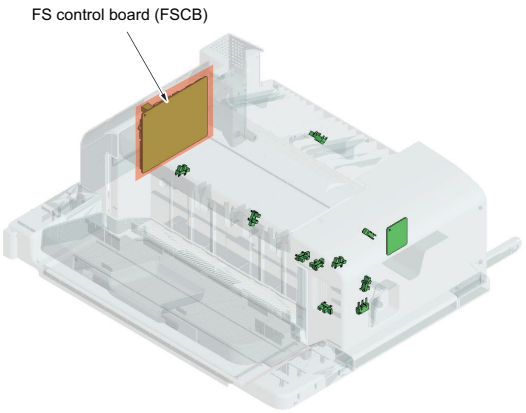


PARTS LAYOUT DRAWING/2 [FS-534, FS-534SD]

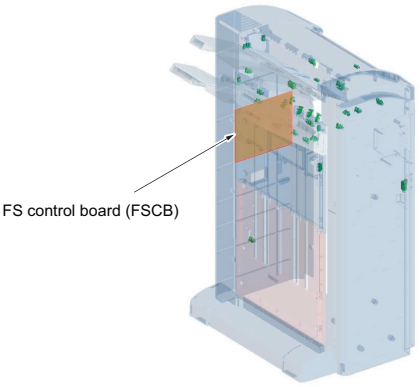


PARTS LAYOUT DRAWING/3 [JS-506]

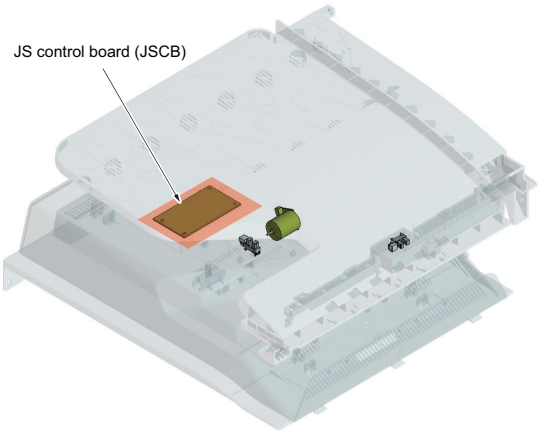

# 15. C1081

PARTS LAYOUT DRAWING/1

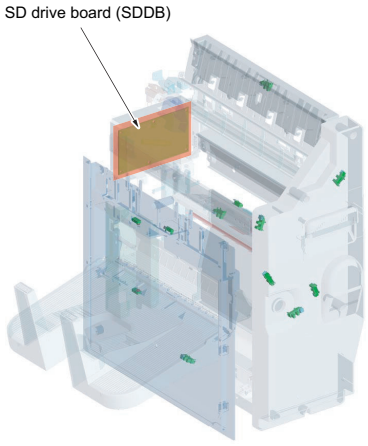


PARTS LAYOUT DRAWING/2

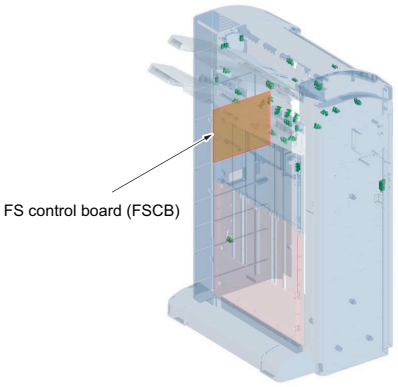

# 16. C1102

## 16.1 FS-533

PARTS LAYOUT DRAWING/1

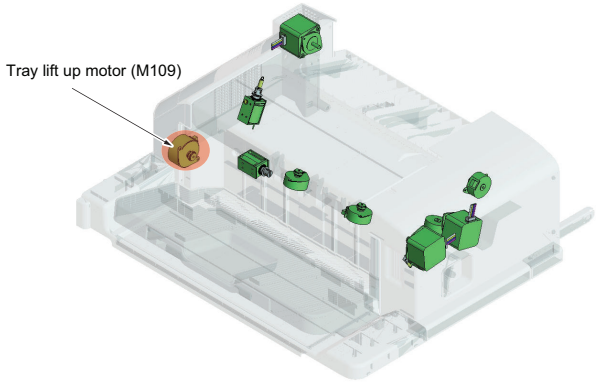


PARTS LAYOUT DRAWING/2

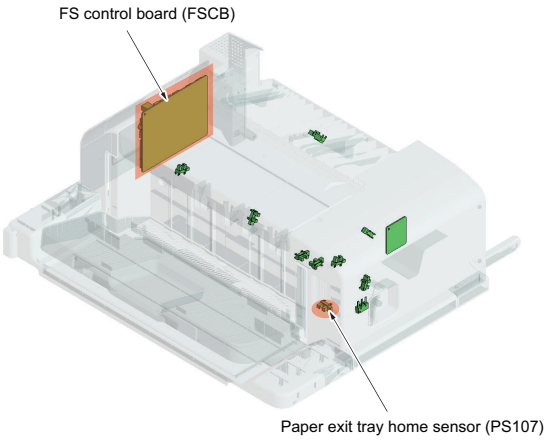


BOARD CONNECTOR LAYOUT DRAWING (FSCB)

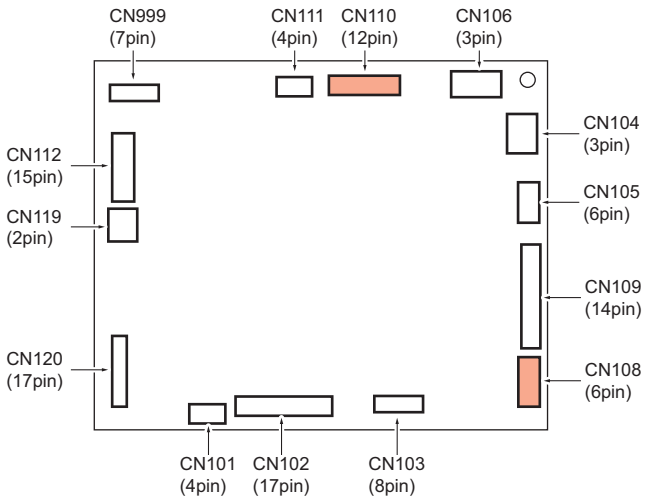


WIRING DIAGRAM

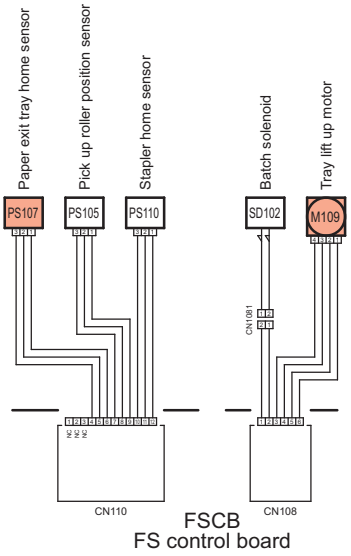

## 16.2 FS-534/FS-534SD

PARTS LAYOUT DRAWING/1

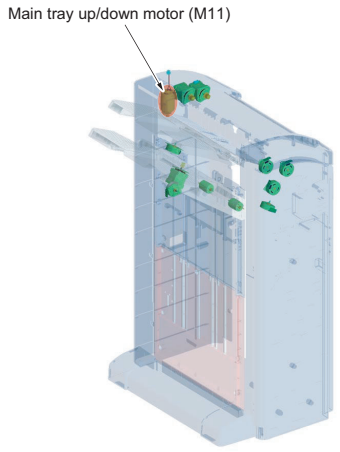


PARTS LAYOUT DRAWING/2

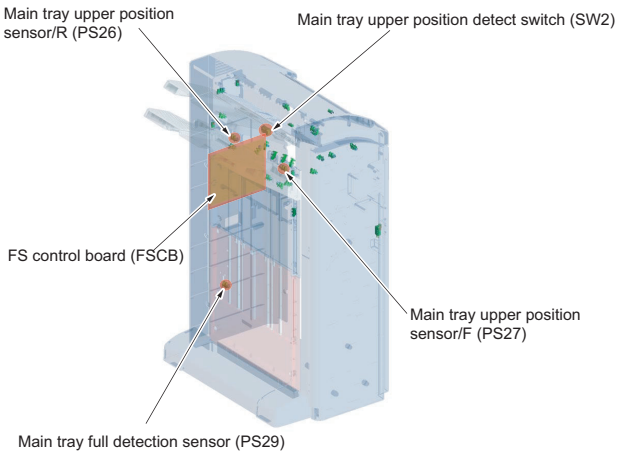


BOARD CONNECTOR LAYOUT DRAWING (FSCB)

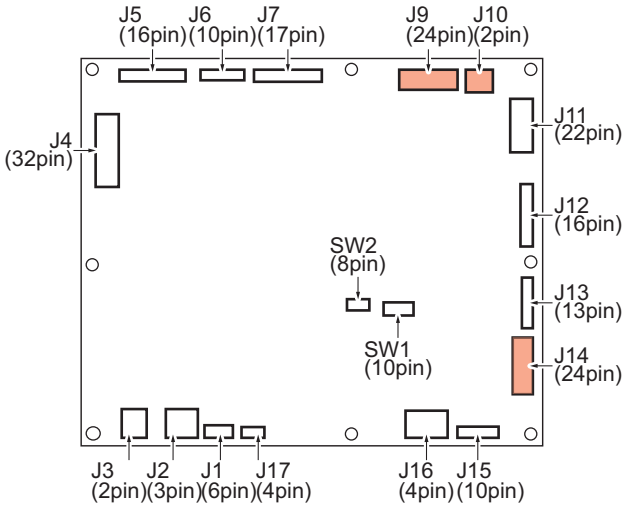


WIRING DIAGRAM

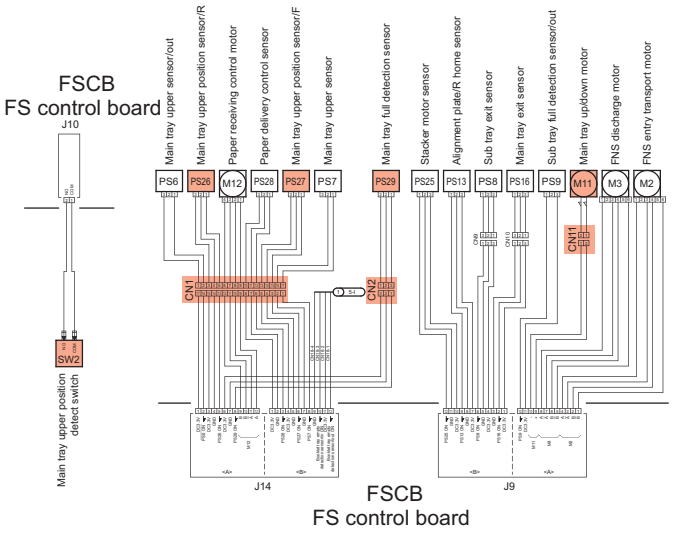

# 17. C1103

## 17.1 FS-533

PARTS LAYOUT DRAWING/1

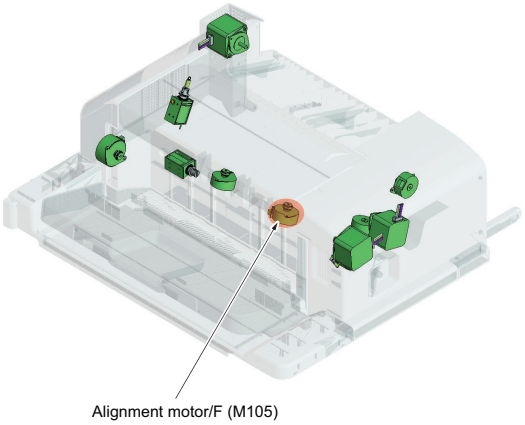


PARTS LAYOUT DRAWING/2

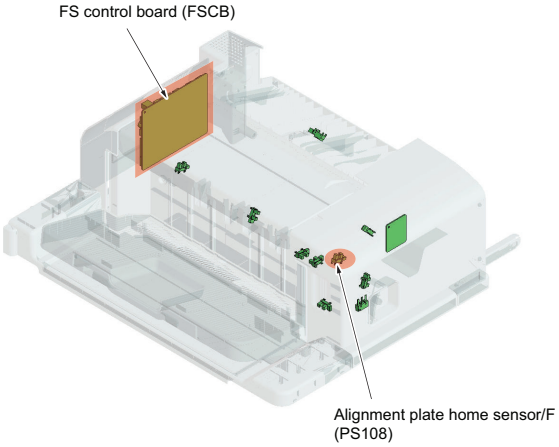


BOARD CONNECTOR LAYOUT DRAWING (FSCB)

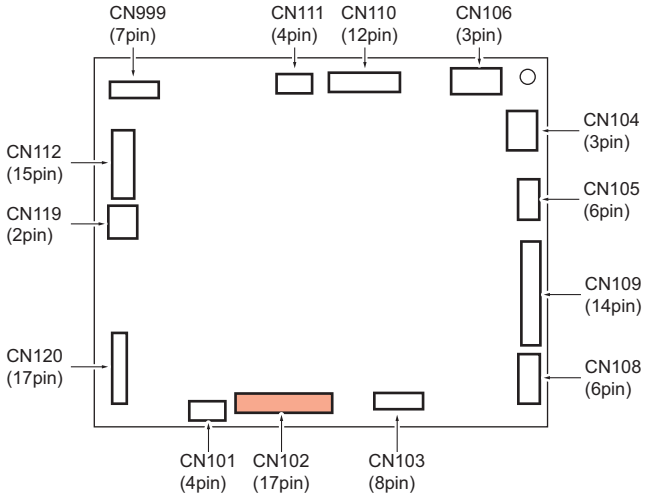


WIRING DIAGRAM

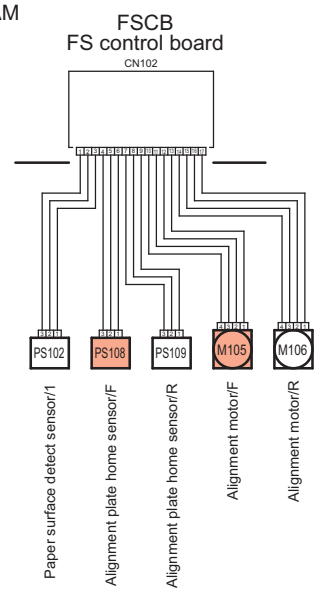

## 17.2 FS-534/FS-534SD

PARTS LAYOUT DRAWING/1

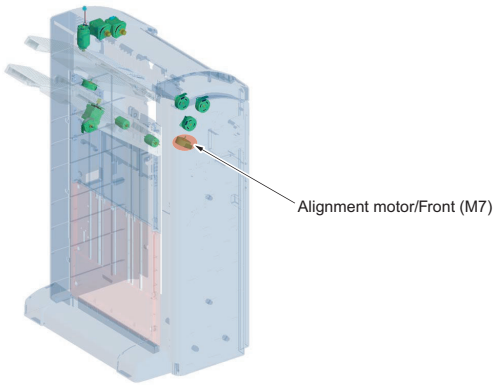


PARTS LAYOUT DRAWING/2

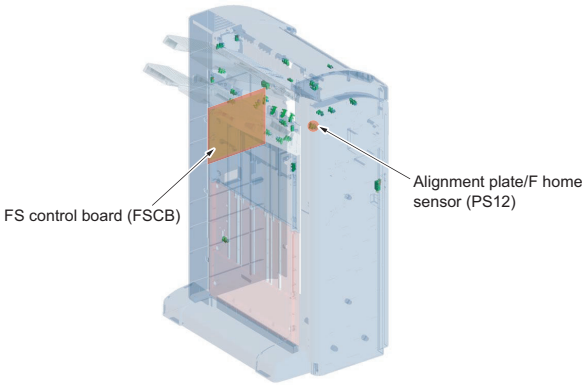


BOARD CONNECTOR LAYOUT DRAWING (FSCB)

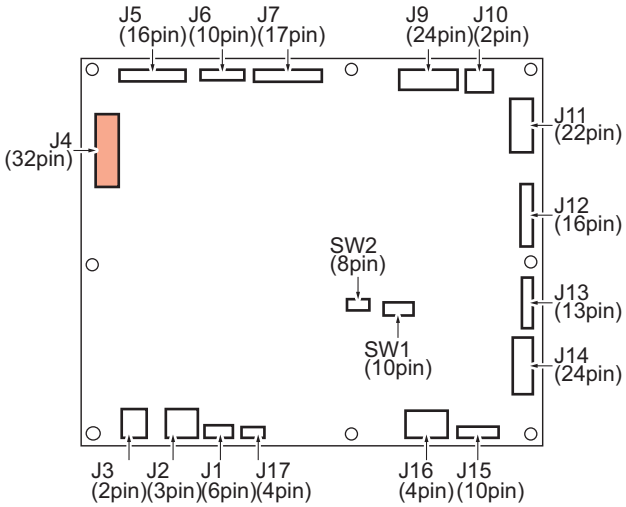


WIRING DIAGRAM

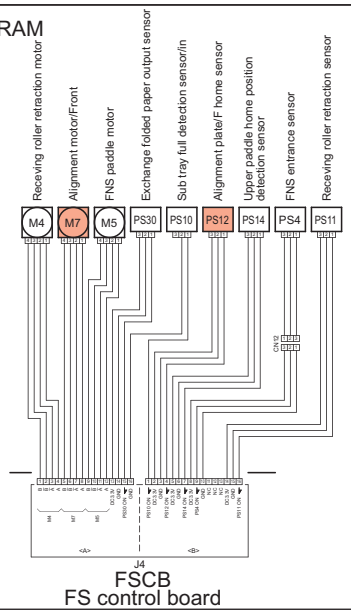

# 18. C1105

PARTS LAYOUT DRAWING/1

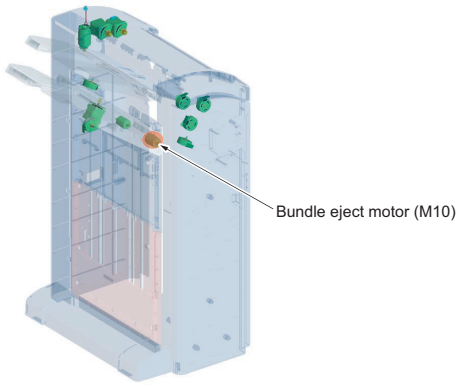


PARTS LAYOUT DRAWING/2

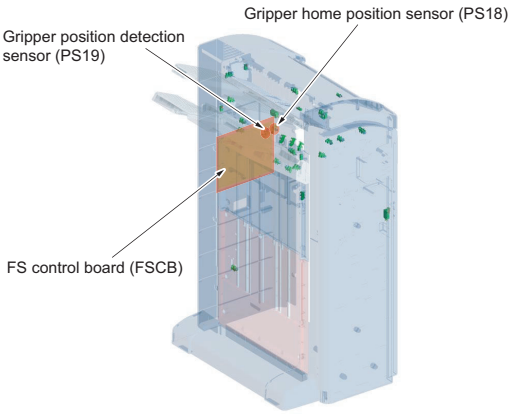


BOARD CONNECTOR LAYOUT DRAWING (FSCB)

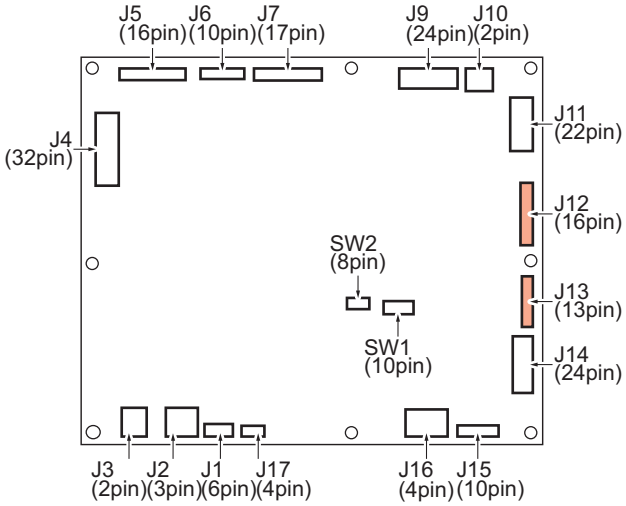


WIRING DIAGRAM

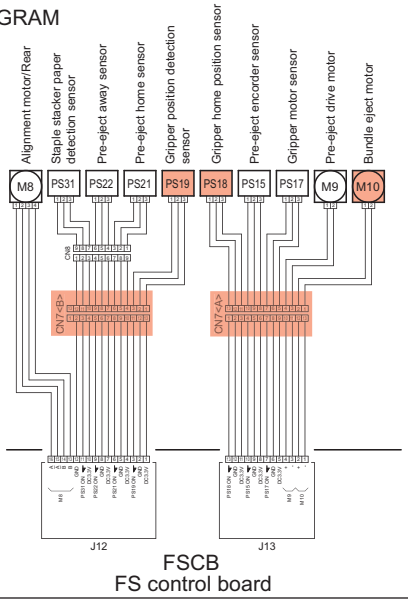

# 19. C1106

## 19.1 FS-533

PARTS LAYOUT DRAWING/1

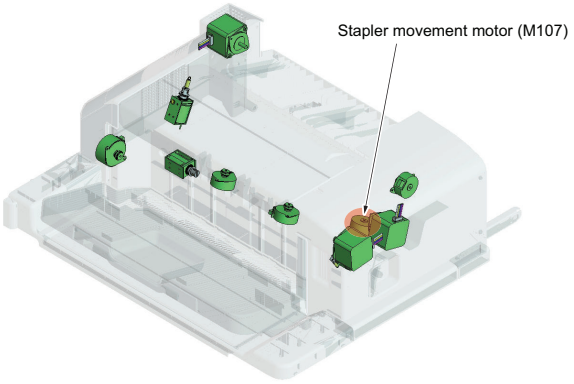


PARTS LAYOUT DRAWING/2

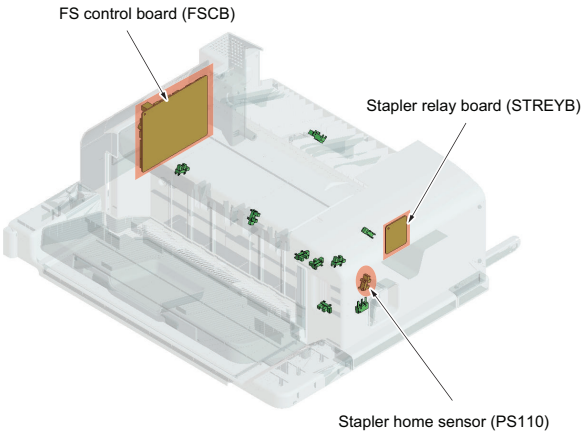


BOARD CONNECTOR LAYOUT DRAWING (STREYB)

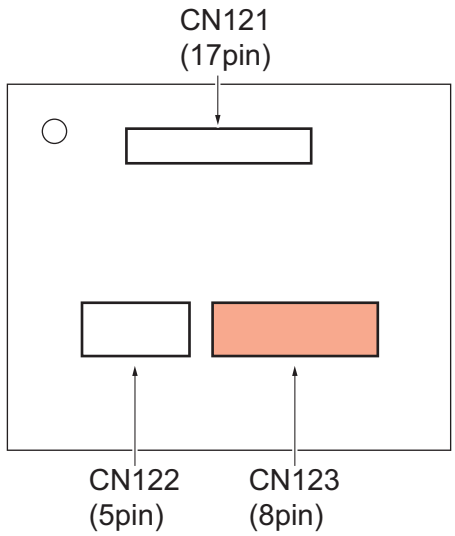


BOARD CONNECTOR LAYOUT DRAWING (FSCB)

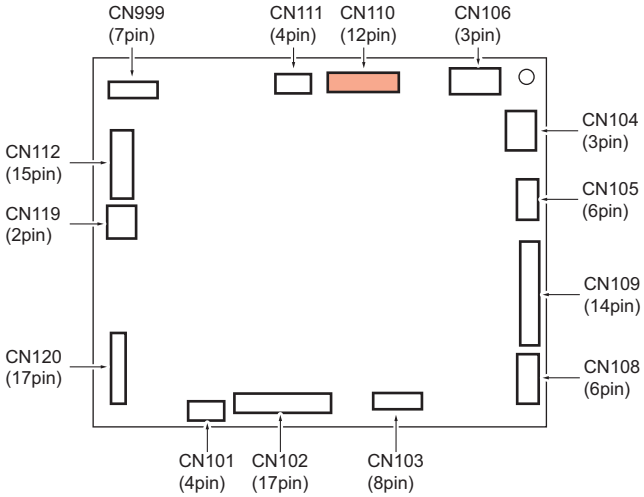


WIRING DIAGRAM

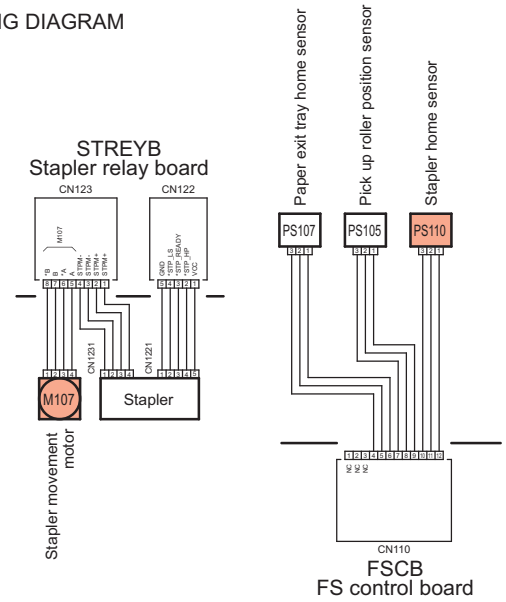

## 19.2 FS-534/FS-534SD

PARTS LAYOUT DRAWING/1

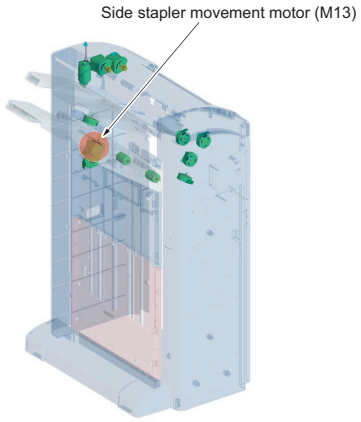


PARTS LAYOUT DRAWING/2

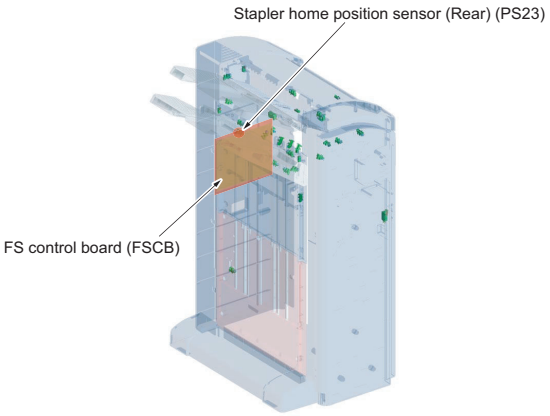


BOARD CONNECTOR LAYOUT DRAWING (FSCB)

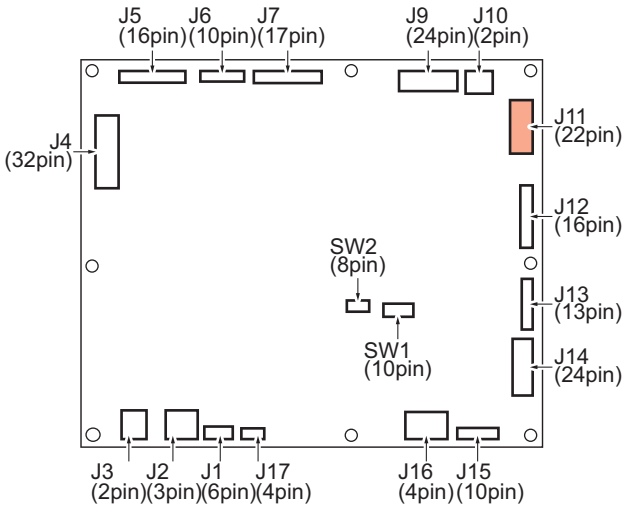


WIRING DIAGRAM

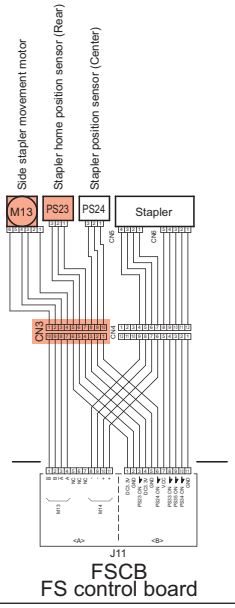

# 20. C1109

## 20.1 FS-533

PARTS LAYOUT DRAWING

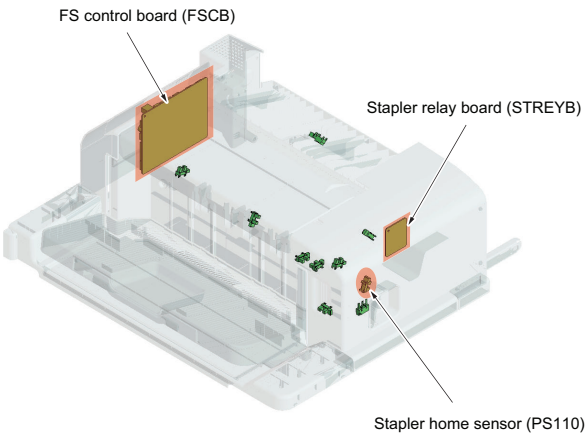


BOARD CONNECTOR LAYOUT DRAWING (STREYB)

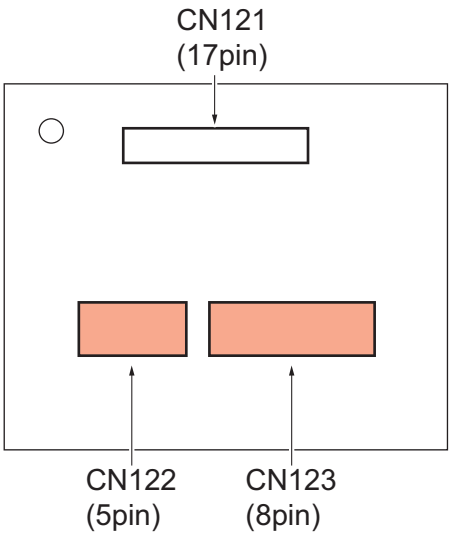


BOARD CONNECTOR LAYOUT DRAWING (FSCB)

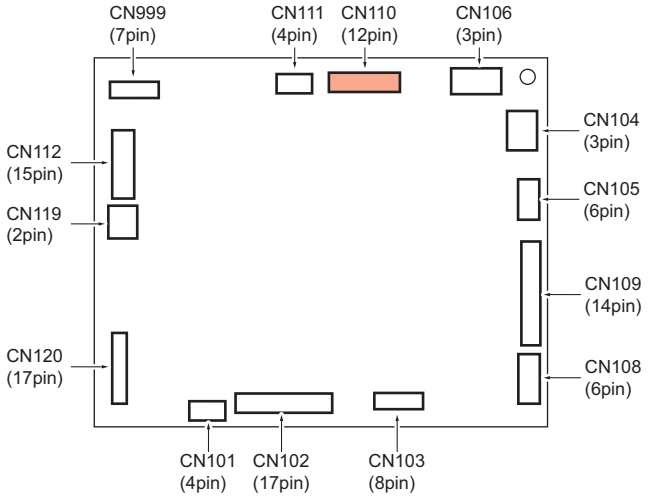


WIRING DIAGRAM

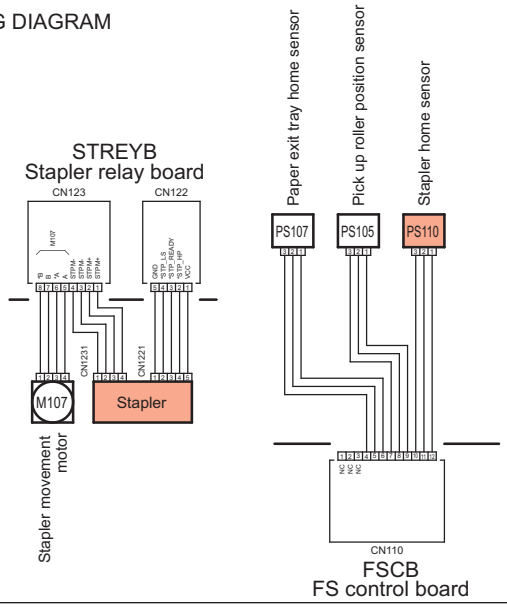

## 20.2 FS-534/FS-534SD

PARTS LAYOUT DRAWING

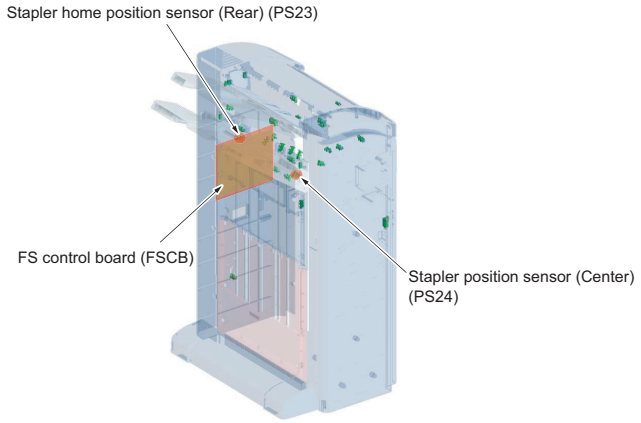


BOARD CONNECTOR LAYOUT DRAWING (FSCB)

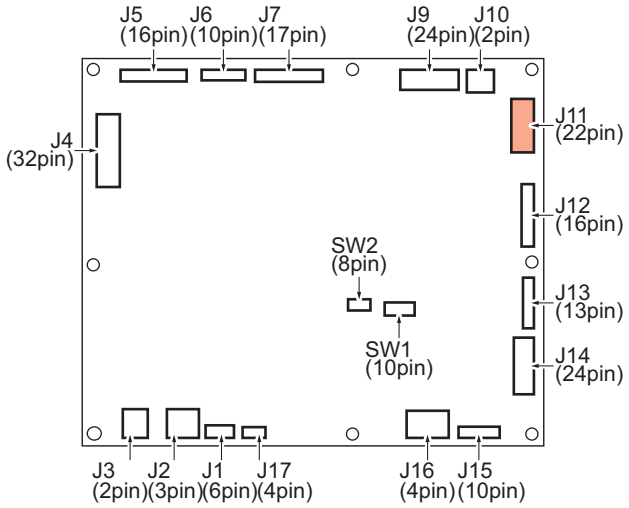


WIRING DIAGRAM

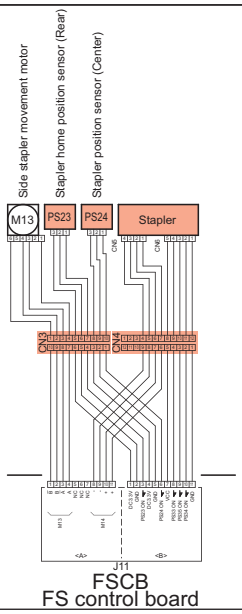

# 21. C1112

PARTS LAYOUT DRAWING/1

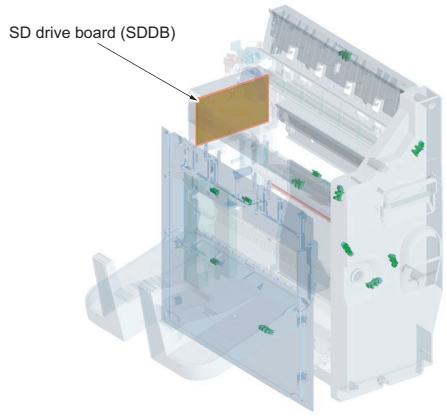


PARTS LAYOUT DRAWING/2

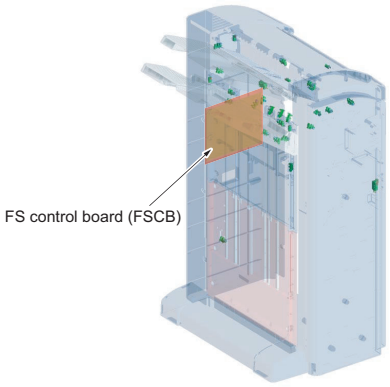


BOARD CONNECTOR LAYOUT DRAWING (SDDB)

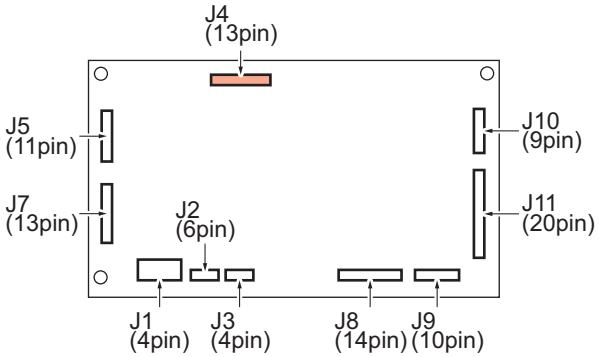


WIRING DIAGRAM

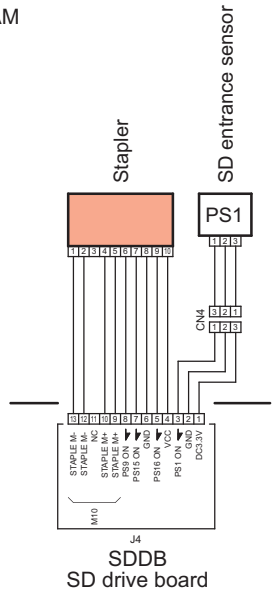

# 22. C1113

PARTS LAYOUT DRAWING/1

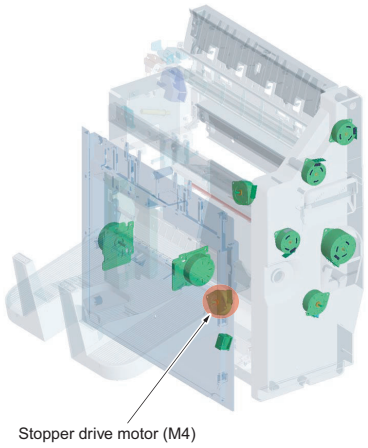


PARTS LAYOUT DRAWING/2

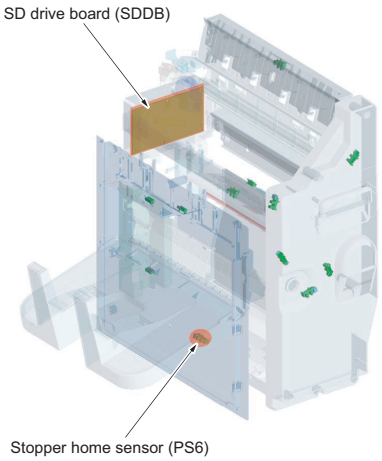


PARTS LAYOUT DRAWING/3

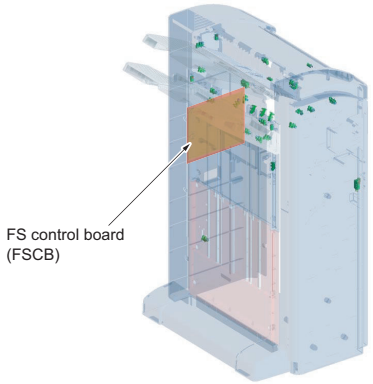


BOARD CONNECTOR LAYOUT DRAWING (SDDB)

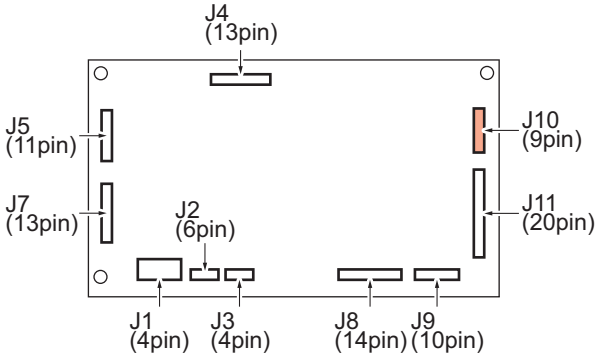


WIRING DIAGRAM

SDDB
SD drive board

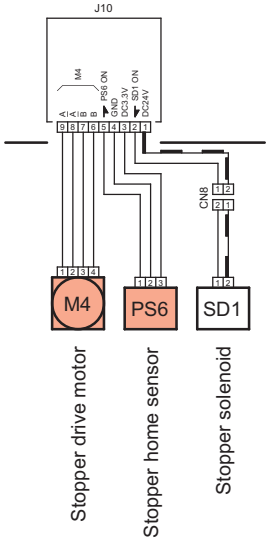

# 23. C1114

PARTS LAYOUT DRAWING/1

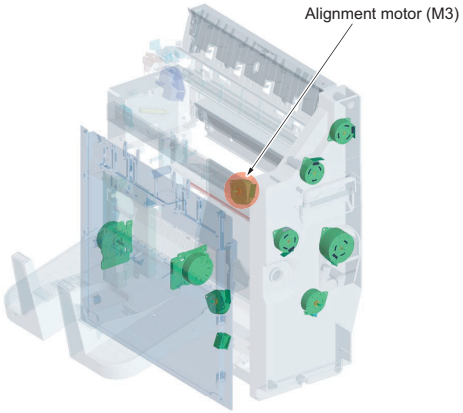


PARTS LAYOUT DRAWING/2

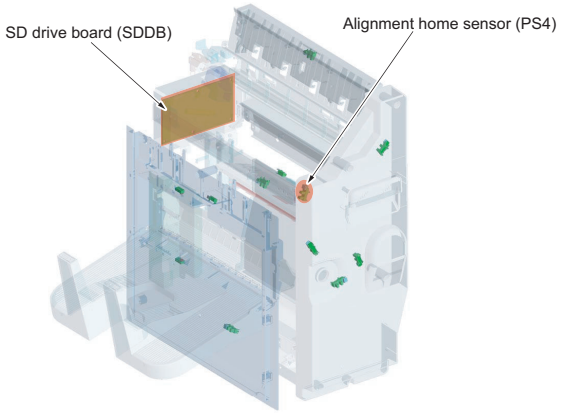


PARTS LAYOUT DRAWING/3

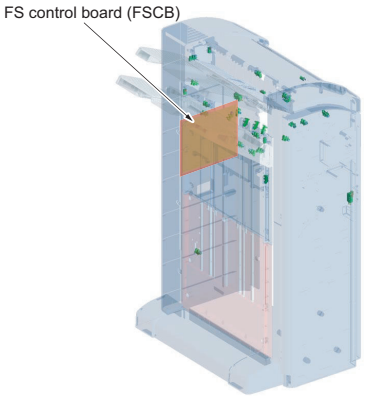


BOARD CONNECTOR LAYOUT DRAWING (SDDB)

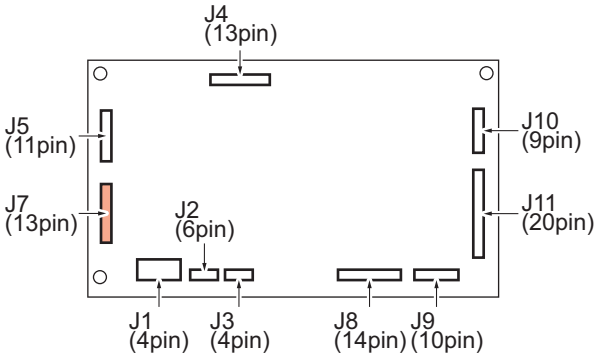


WIRING DIAGRAM

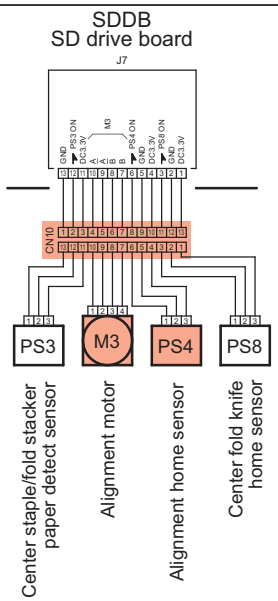

# 24. C1115

## PARTS LAYOUT DRAWING/1

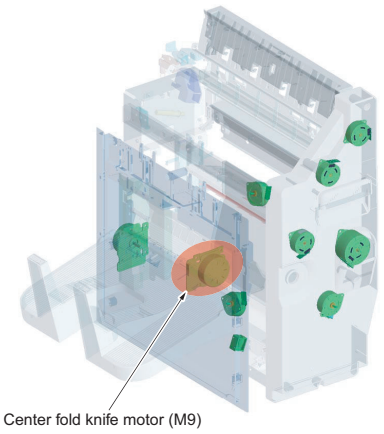


## PARTS LAYOUT DRAWING/2

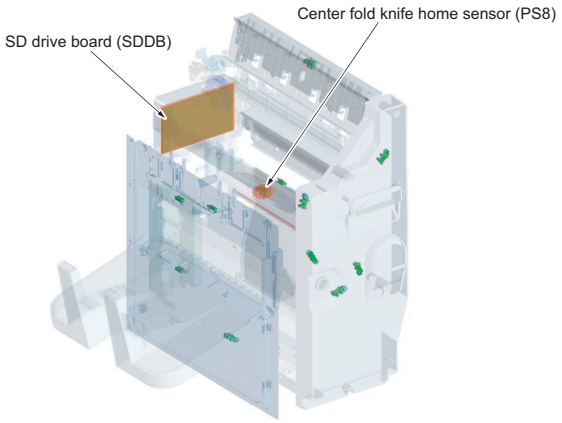


## PARTS LAYOUT DRAWING/3

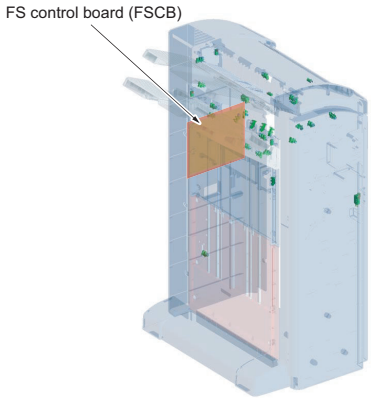


## BOARD CONNECTOR LAYOUT DRAWING (SDDB)

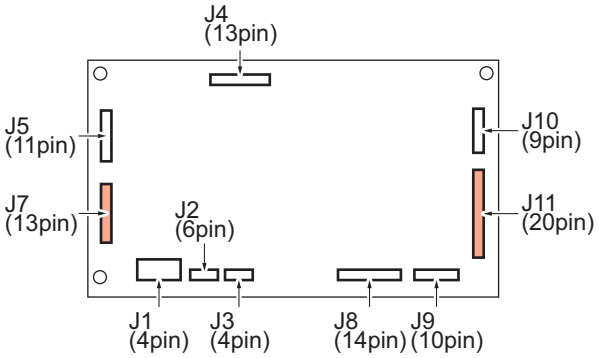


## WIRING DIAGRAM

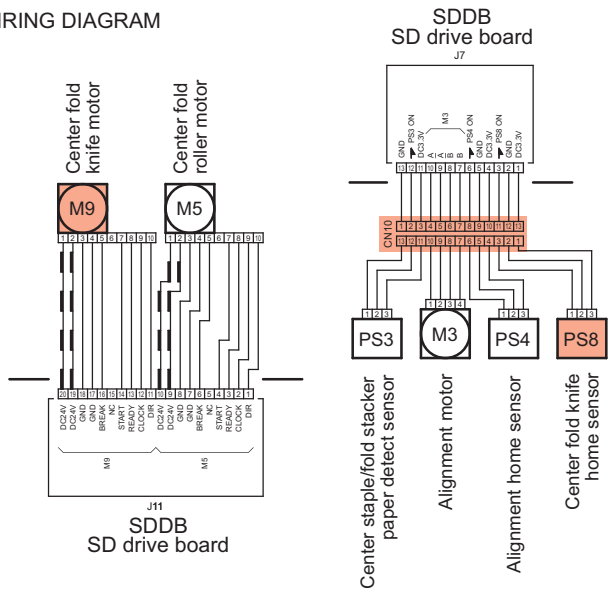

# 25. C1132

## 25.1 FS-533+PK-519

PARTS LAYOUT DRAWING/1

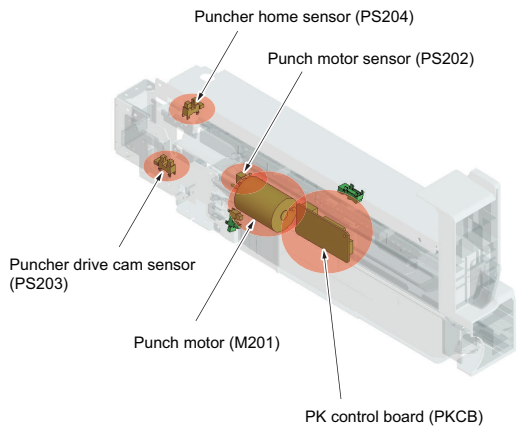


PARTS LAYOUT DRAWING/2

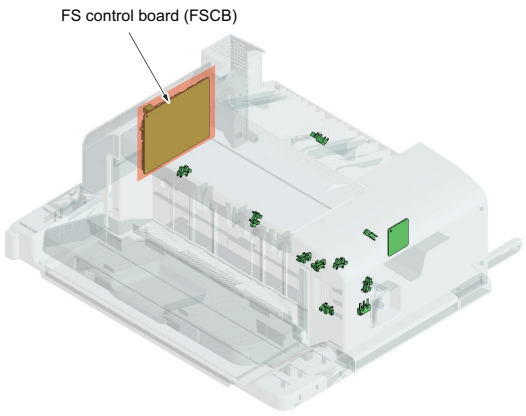


BOARD CONNECTOR LAYOUT DRAWING (PKCB)

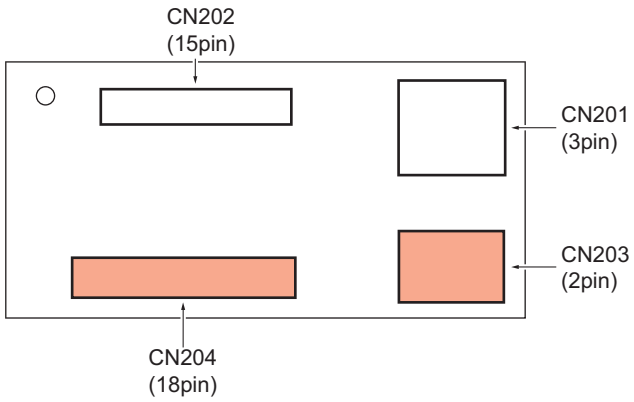


WIRING DIAGRAM

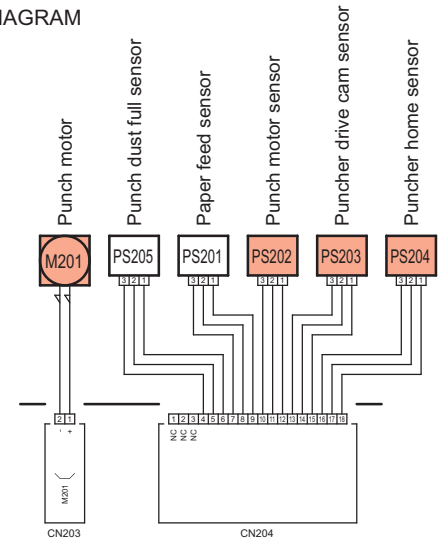

## 25.2 FS-534+PK-520/FS-534SD+PK-520

PARTS LAYOUT DRAWING/1

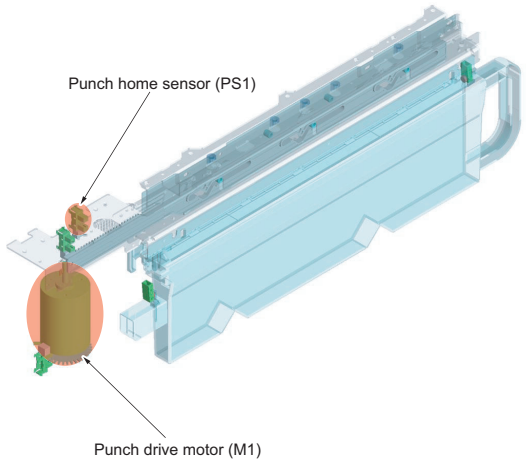


PARTS LAYOUT DRAWING/2

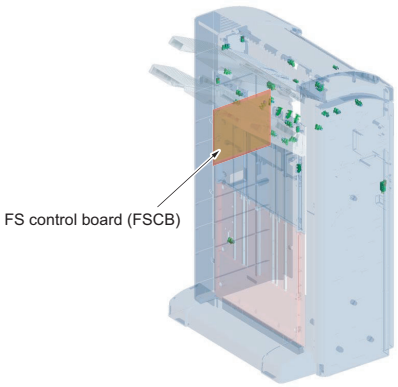


BOARD CONNECTOR LAYOUT DRAWING (FSCB)

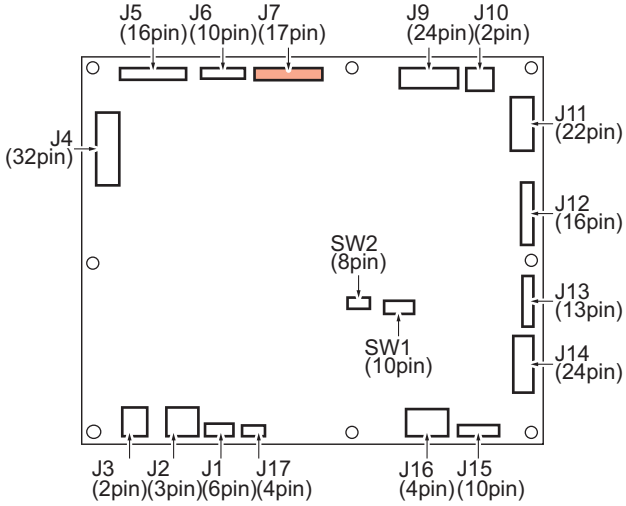


WIRING DIAGRAM

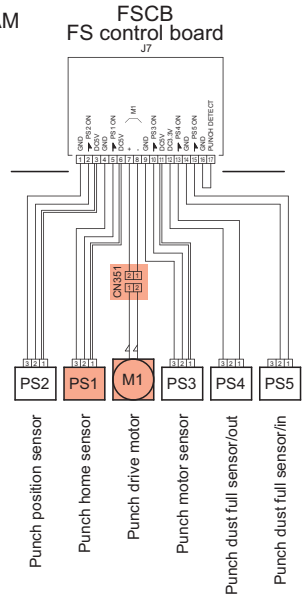

# 26. C1140

## 26.1 FS-533

PARTS LAYOUT DRAWING/1

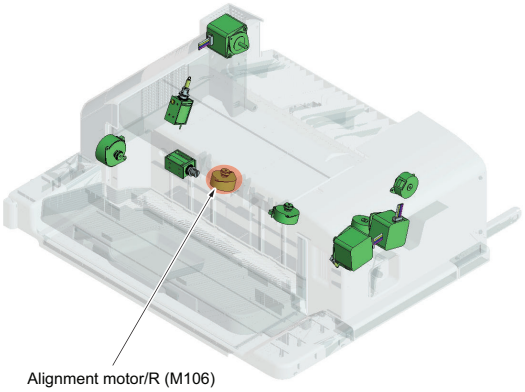


PARTS LAYOUT DRAWING/2

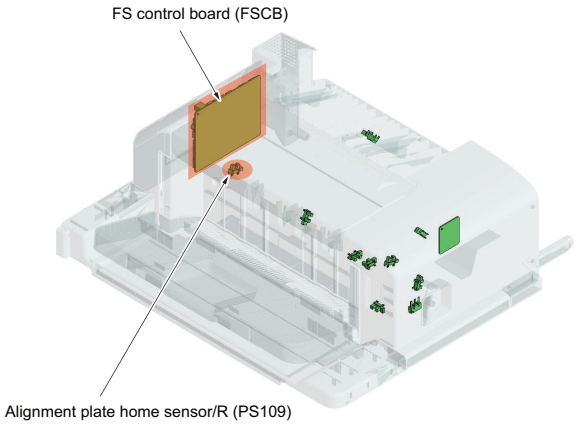


BOARD CONNECTOR LAYOUT DRAWING (FSCB)

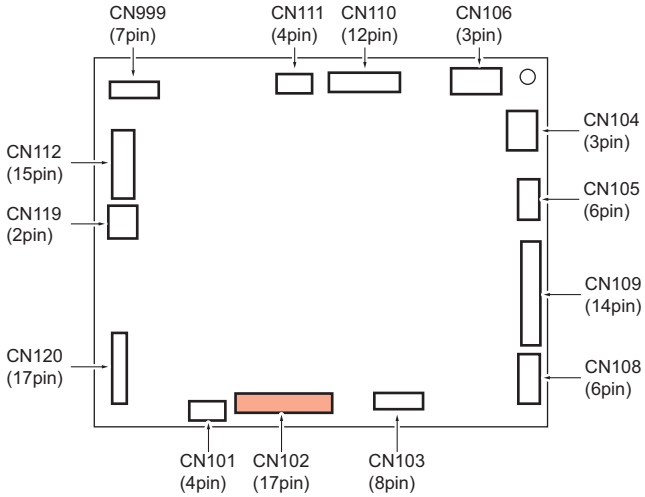


WIRING DIAGRAM

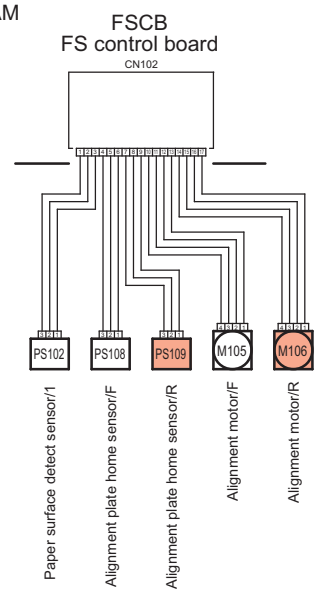

## 26.2 FS-534/FS-534SD

PARTS LAYOUT DRAWING/1

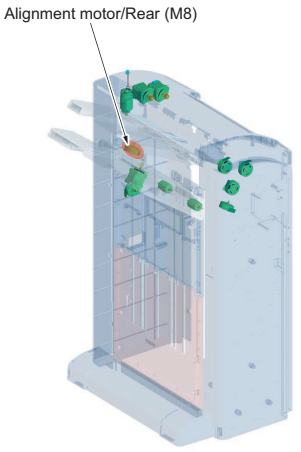


PARTS LAYOUT DRAWING/2

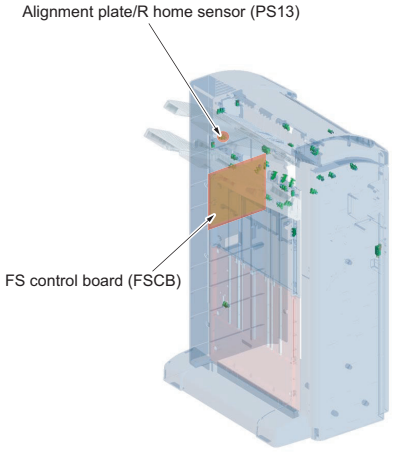


BOARD CONNECTOR LAYOUT DRAWING (FSCB)

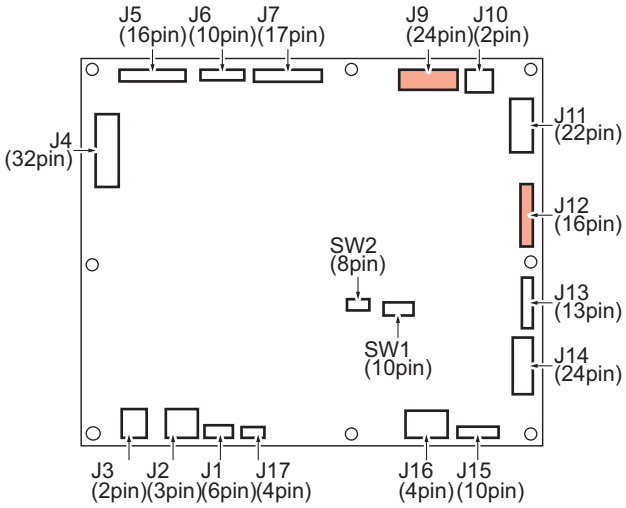


WIRING DIAGRAM

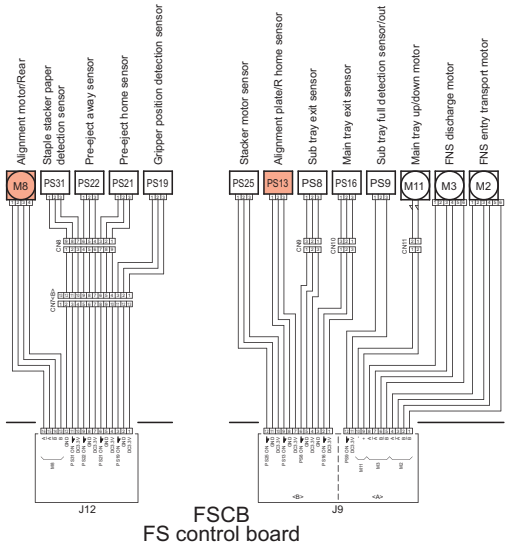

# 27. C1141

## PARTS LAYOUT DRAWING/1

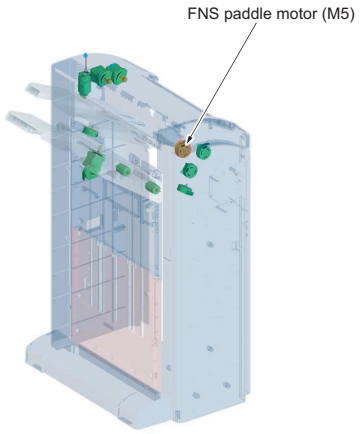


## PARTS LAYOUT DRAWING/2

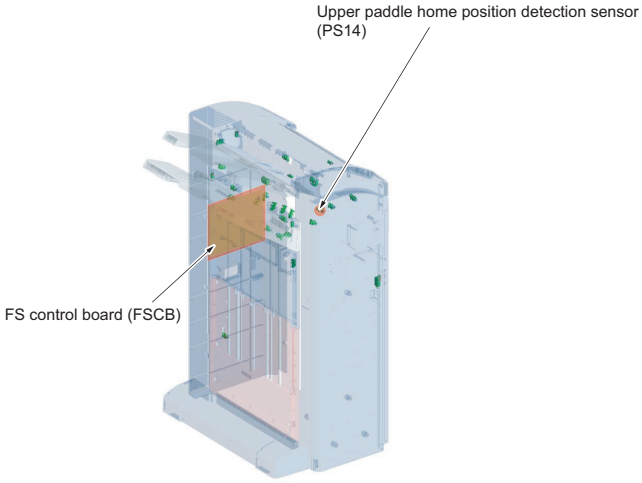


## BOARD CONNECTOR LAYOUT DRAWING (FSCB)

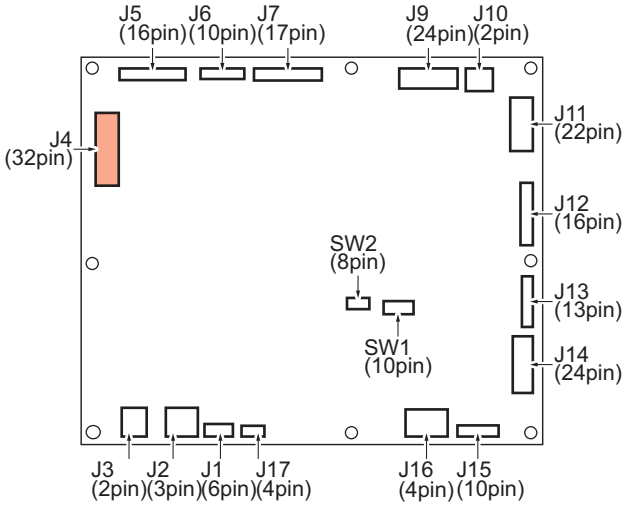


## WIRING DIAGRAM

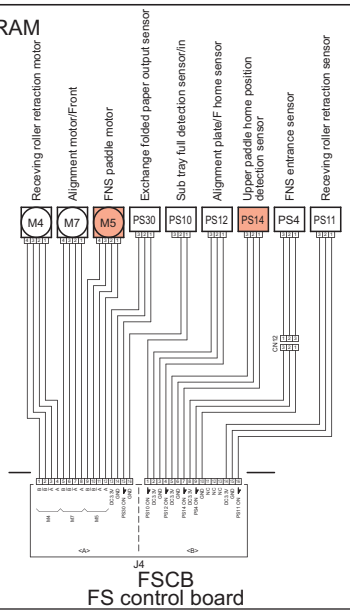

# 28. C1144

## PARTS LAYOUT DRAWING/1

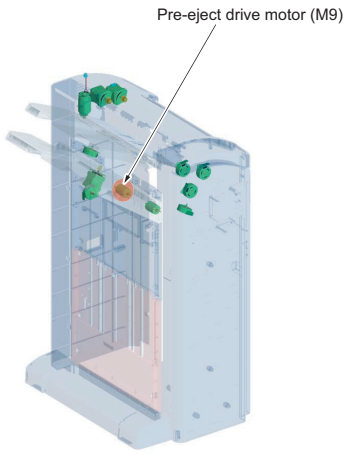


## PARTS LAYOUT DRAWING/2

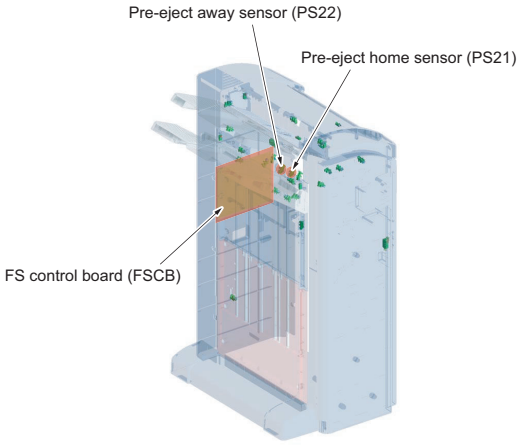


## BOARD CONNECTOR LAYOUT DRAWING (FSCB)

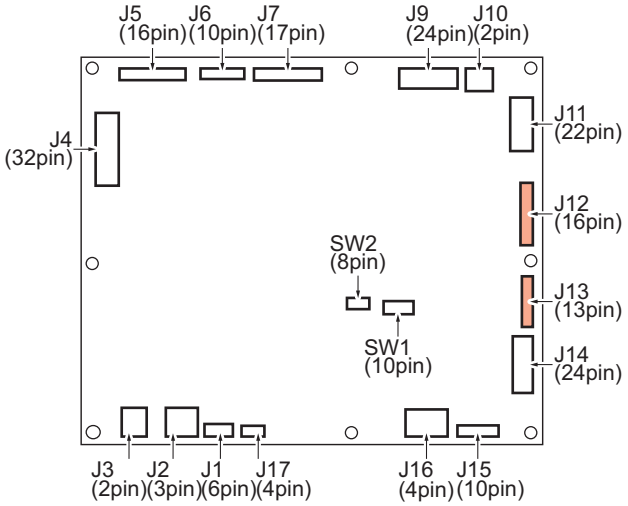


## WIRING DIAGRAM

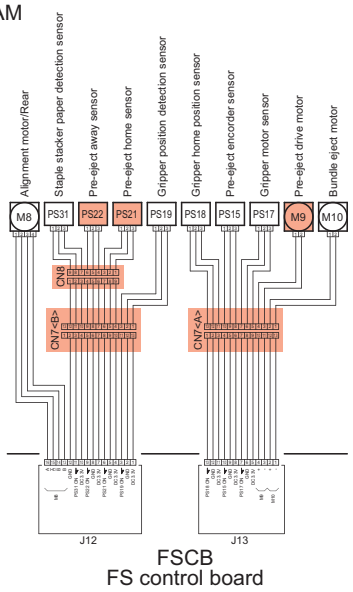

# 29. C1145

PARTS LAYOUT DRAWING/1

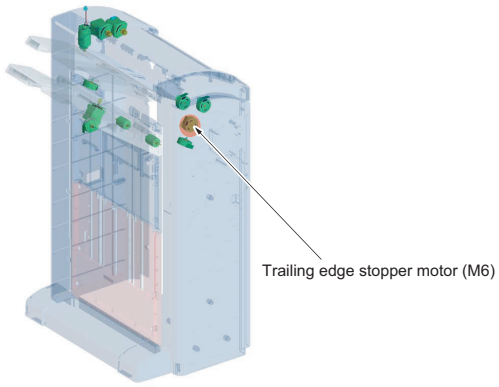


PARTS LAYOUT DRAWING/2

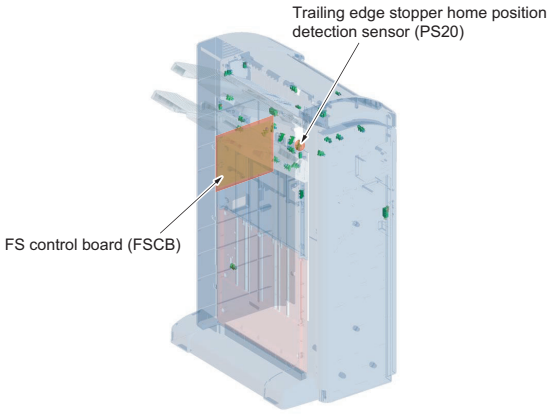


BOARD CONNECTOR LAYOUT DRAWING (FSCB)

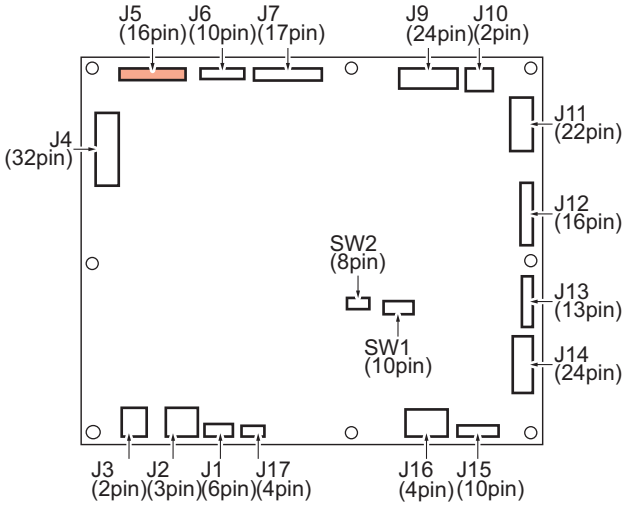


WIRING DIAGRAM

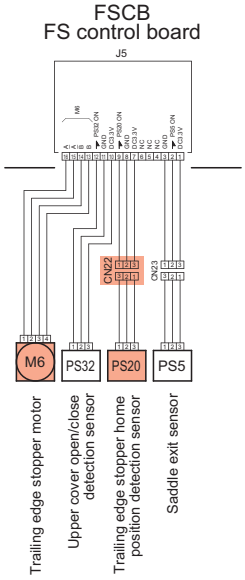

# 30. C1156

PARTS LAYOUT DRAWING/1

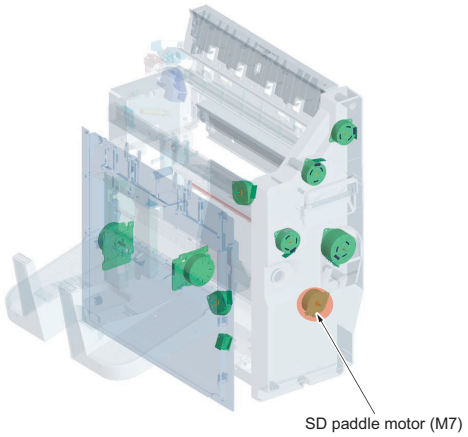


PARTS LAYOUT DRAWING/2

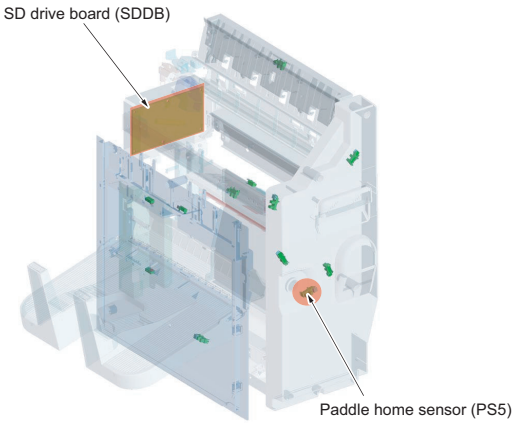


PARTS LAYOUT DRAWING/3

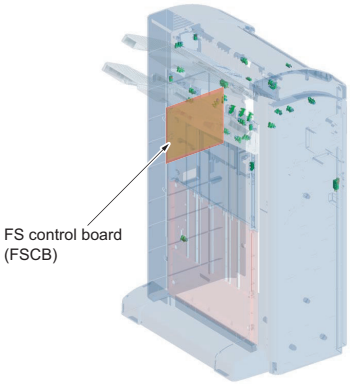


BOARD CONNECTOR LAYOUT DRAWING (SDDB)

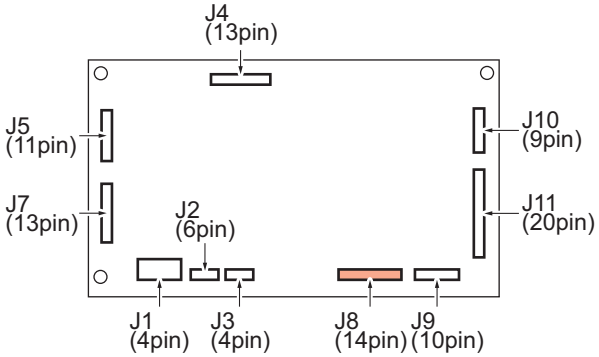


WIRING DIAGRAM

SDDB
SD drive board

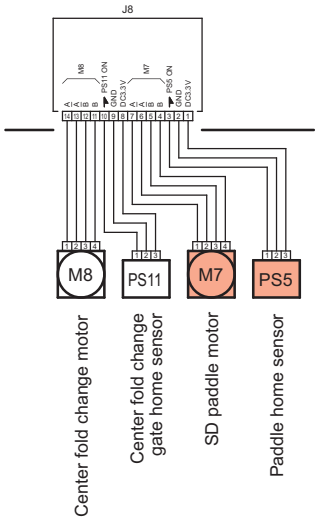

# 31. C1182

PARTS LAYOUT DRAWING

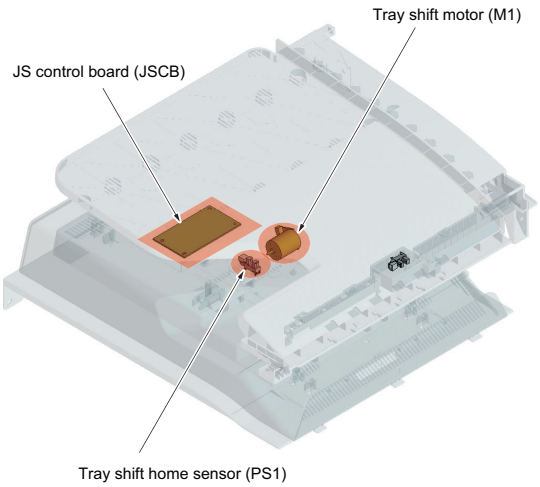


BOARD CONNECTOR LAYOUT DRAWING (JSCB)

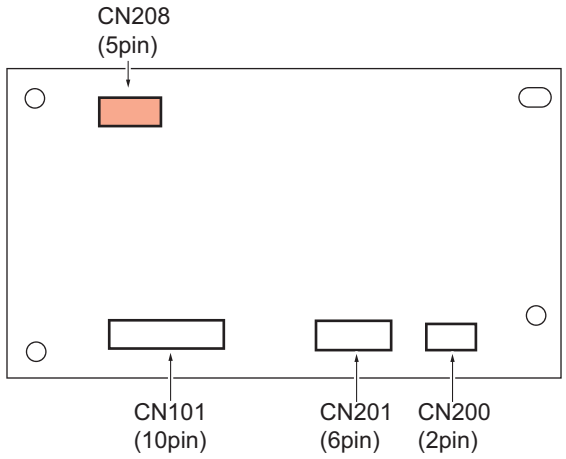


WIRING DIAGRAM

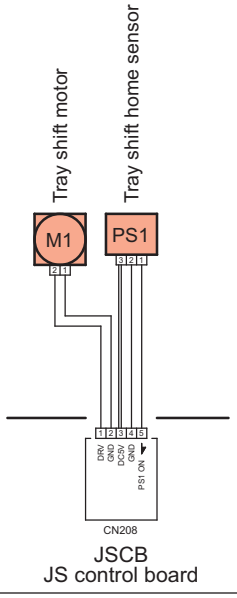

# 32. C1184

## PARTS LAYOUT DRAWING/1

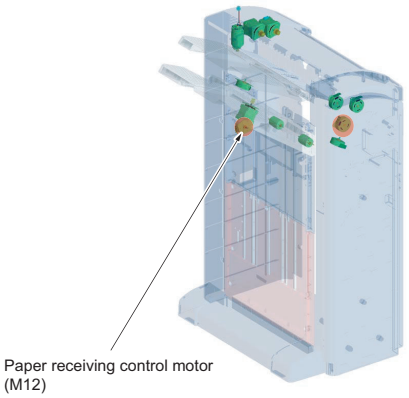


## PARTS LAYOUT DRAWING/2

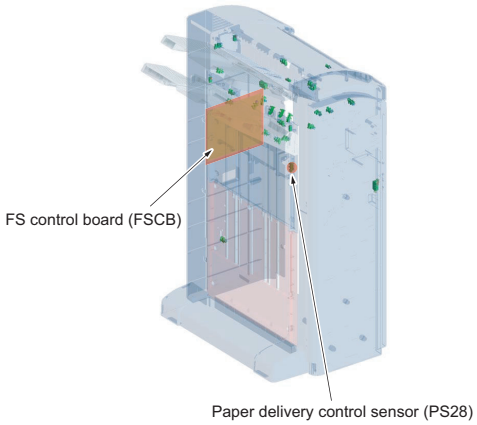


## BOARD CONNECTOR LAYOUT DRAWING (FSCB)

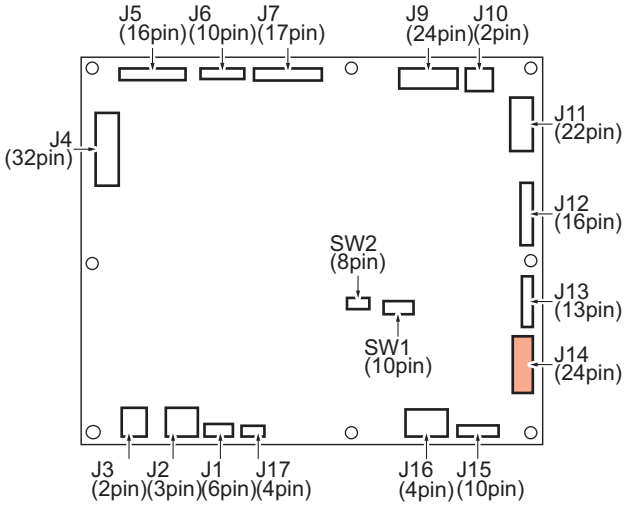


## WIRING DIAGRAM

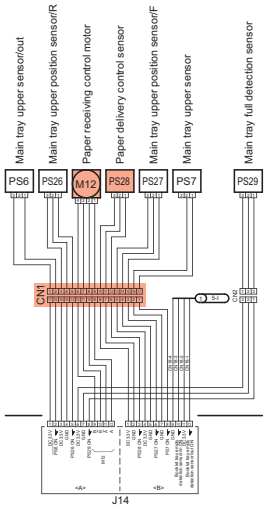


FSCB
FS control board

# 33. C1195

## PARTS LAYOUT DRAWING/1

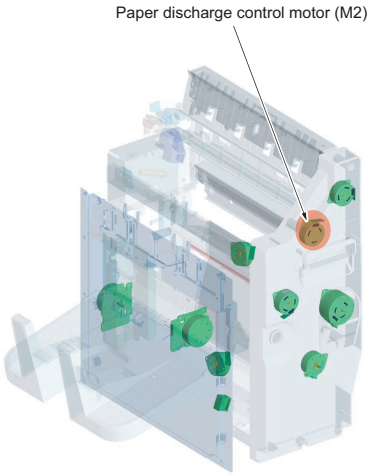


## PARTS LAYOUT DRAWING/2

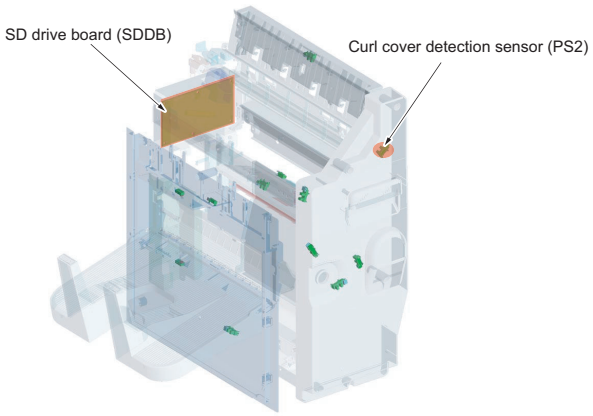


## PARTS LAYOUT DRAWING/3

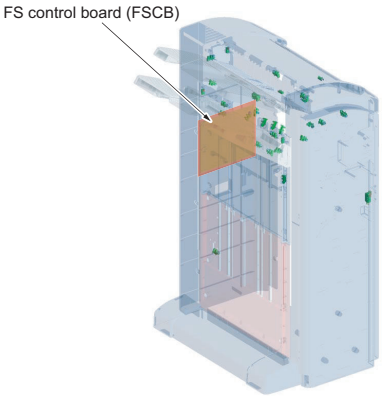


## BOARD CONNECTOR LAYOUT DRAWING (SDDB)

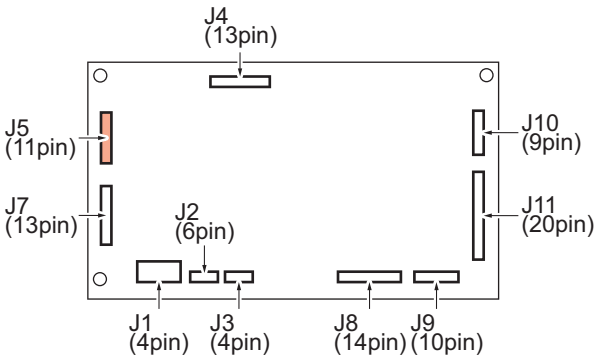


## WIRING DIAGRAM

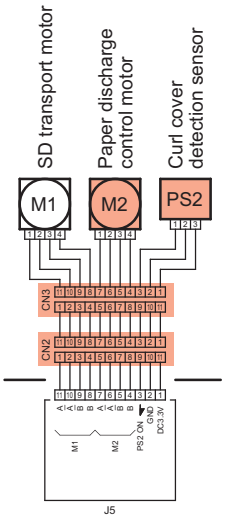


SDDB
SD drive board

# 34. C1196

PARTS LAYOUT DRAWING/1

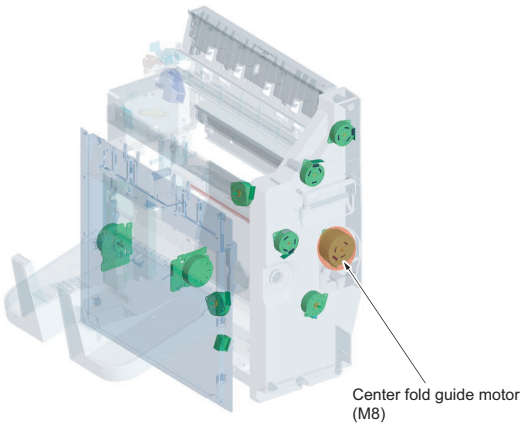


PARTS LAYOUT DRAWING/2

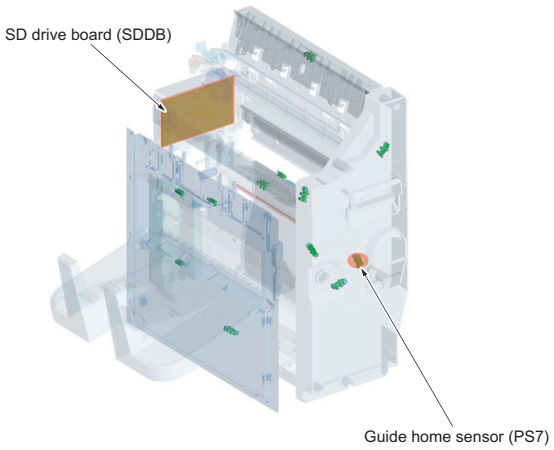


PARTS LAYOUT DRAWING/3

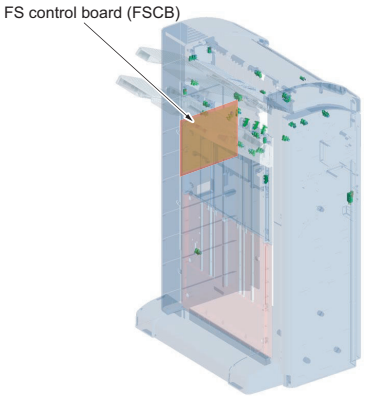


BOARD CONNECTOR LAYOUT DRAWING (SDDB)

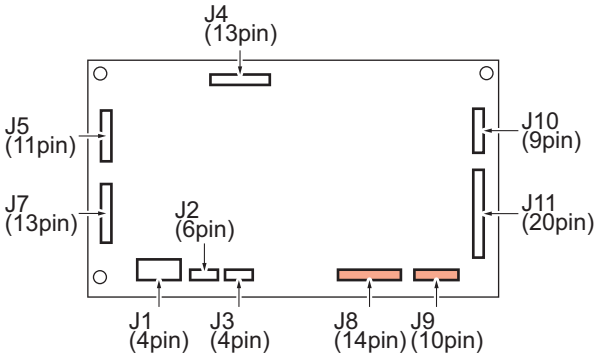


WIRING DIAGRAM

SDDB
SD drive board

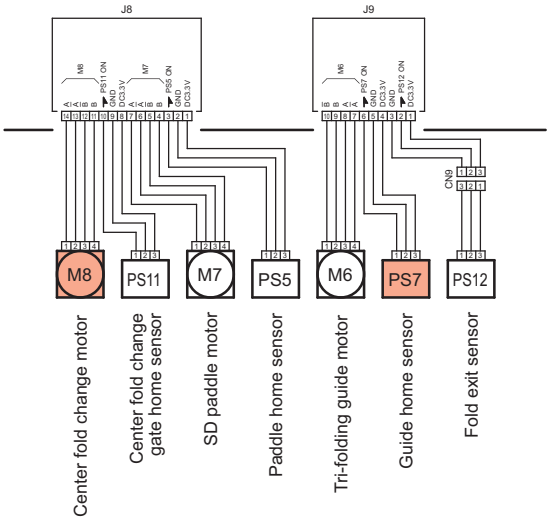

# 35. C1197

PARTS LAYOUT DRAWING/1

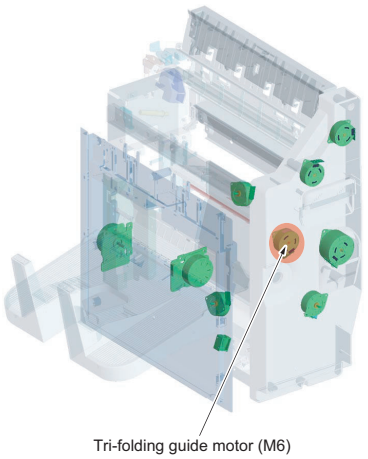


PARTS LAYOUT DRAWING/2

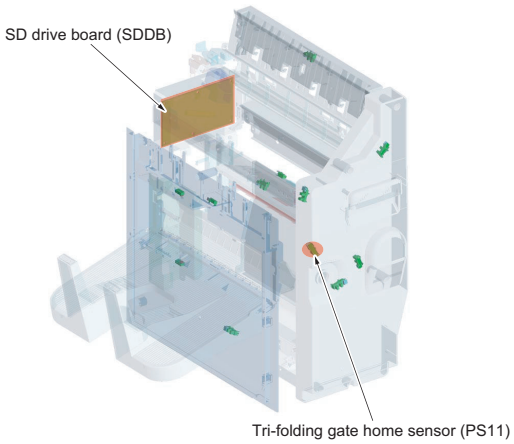


PARTS LAYOUT DRAWING/3

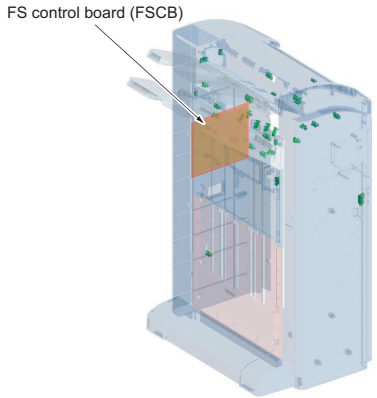


BOARD CONNECTOR LAYOUT DRAWING (SDDB)

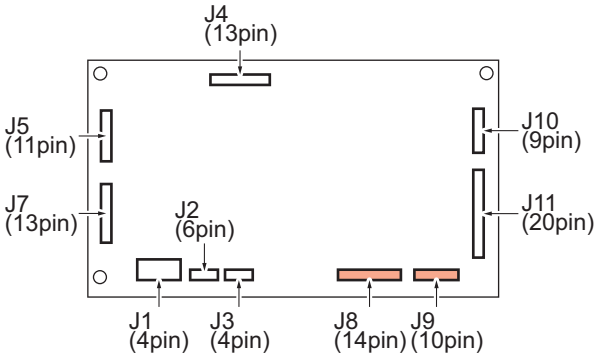


WIRING DIAGRAM

SDDB
SD drive board

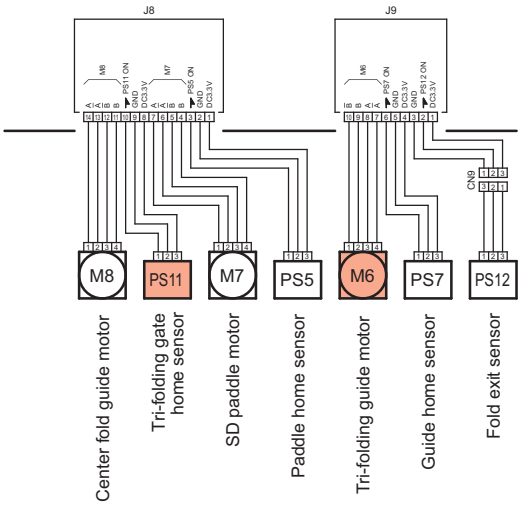

# 36. C11A1

## PARTS LAYOUT DRAWING/1

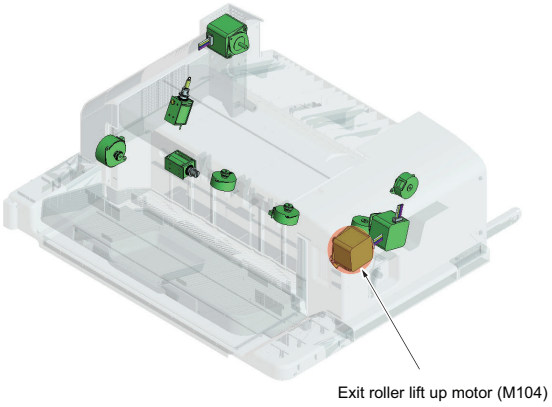


## PARTS LAYOUT DRAWING/2

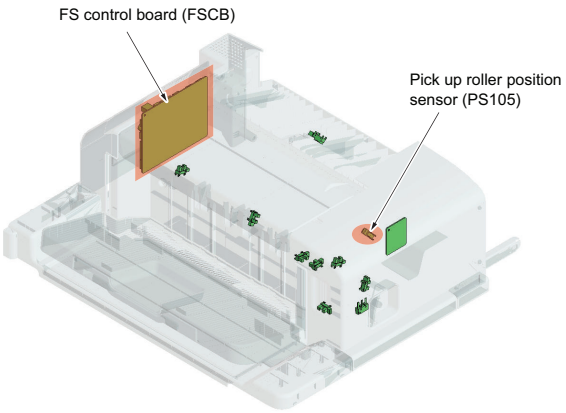


## BOARD CONNECTOR LAYOUT DRAWING (FSCB)

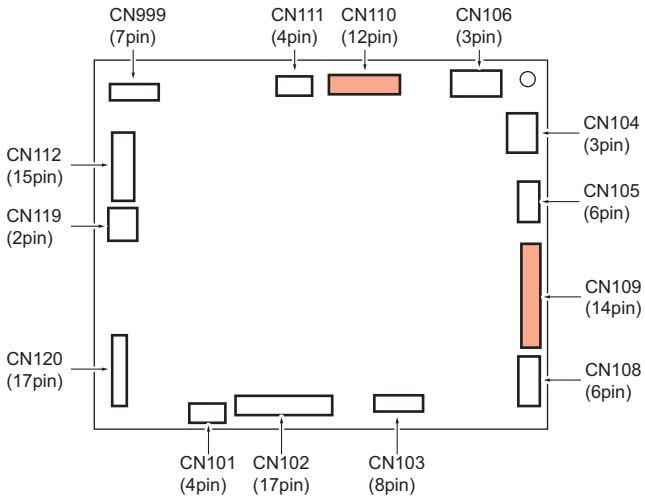


## WIRING DIAGRAM

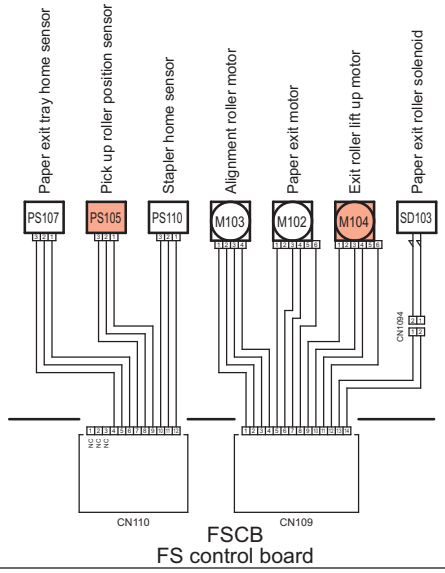

# 37. C11A2

## PARTS LAYOUT DRAWING/1

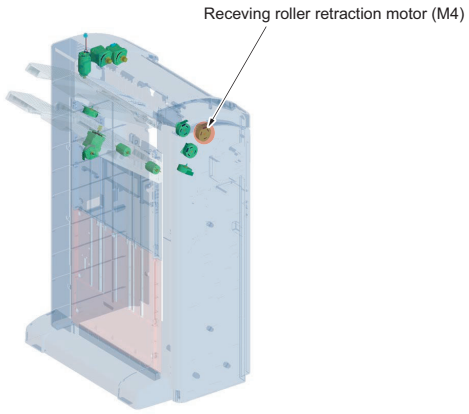


## PARTS LAYOUT DRAWING/2

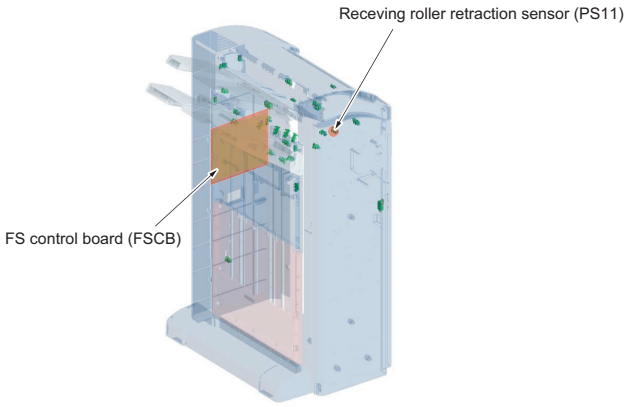


## BOARD CONNECTOR LAYOUT DRAWING (FSCB)

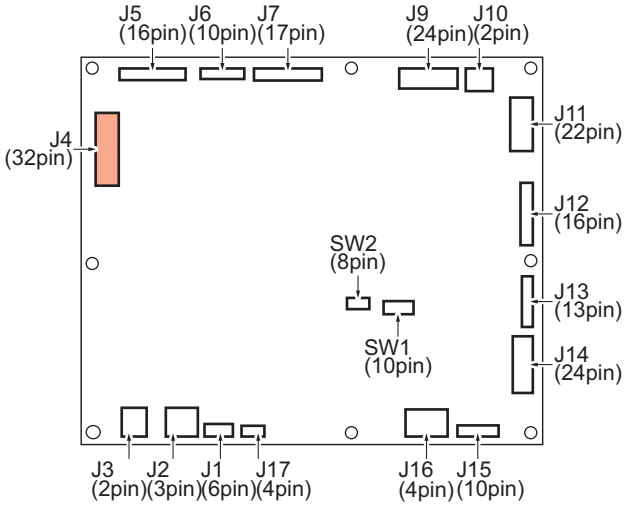


## WIRING DIAGRAM

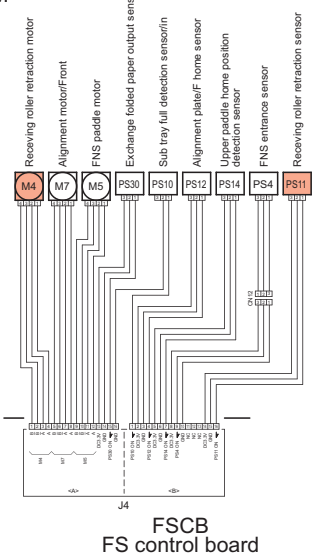

# 38. C11E1

## PARTS LAYOUT DRAWING/1

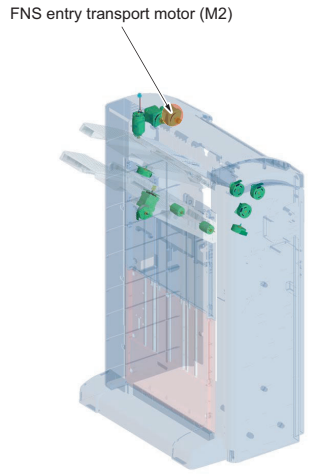


## PARTS LAYOUT DRAWING/2

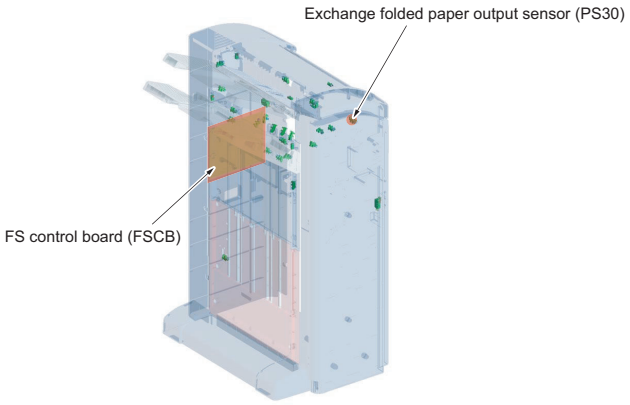


## BOARD CONNECTOR LAYOUT DRAWING (FSCB)

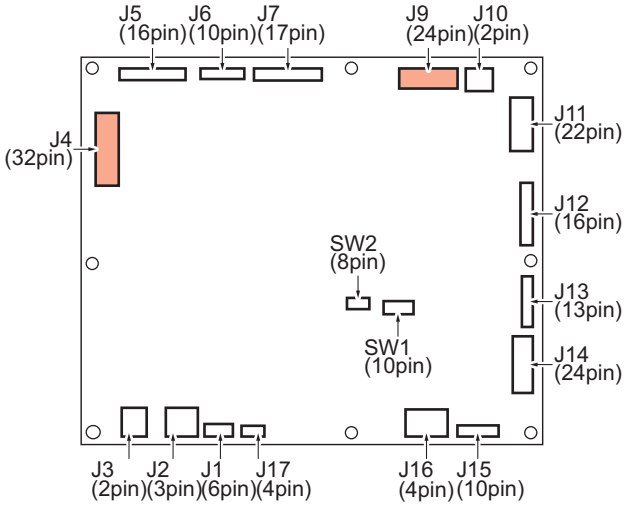


## WIRING DIAGRAM

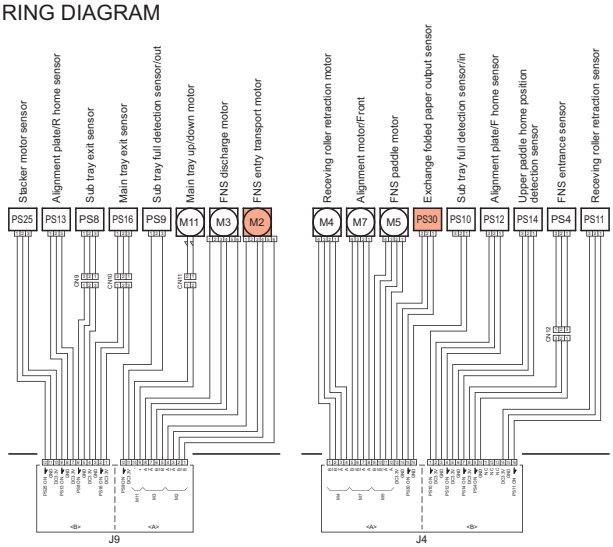


FSCB
FS control board

# 39. C1402

PARTS LAYOUT DRAWING

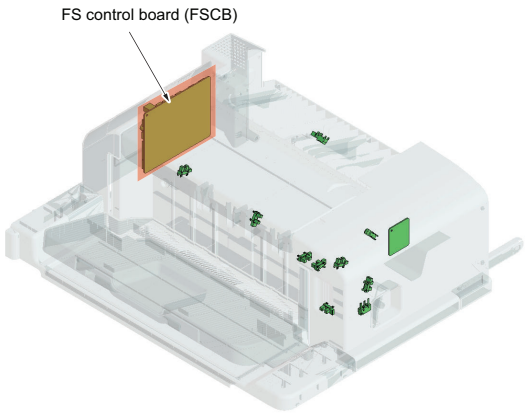

# 40. C2152, C2153, C2154, C2155, C2156

PARTS LAYOUT DRAWING/1

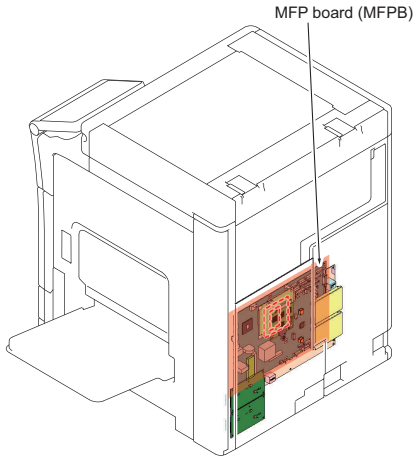


PARTS LAYOUT DRAWING/2

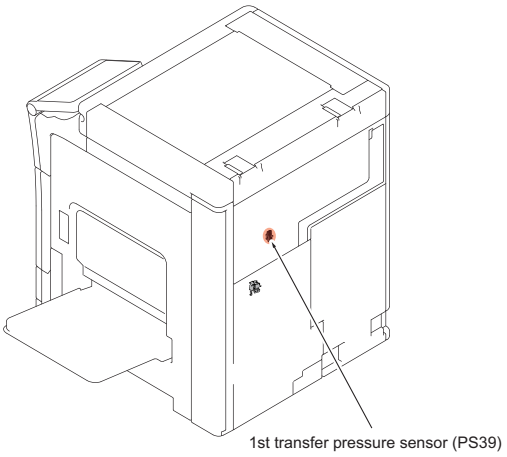


PARTS LAYOUT DRAWING/3

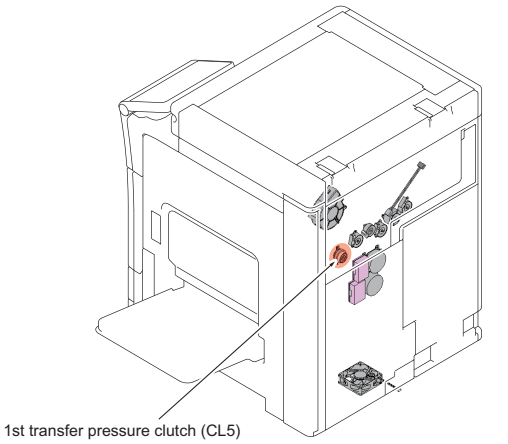


PARTS LAYOUT DRAWING/4

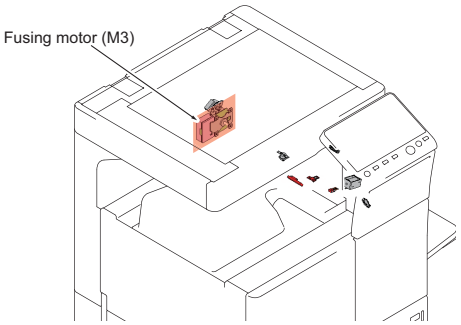


BOARD CONNECTOR LAYOUT DRAWING (MFPB)

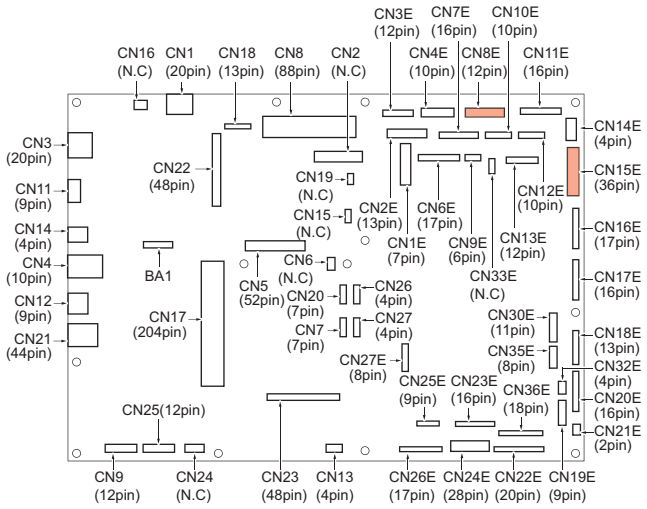


RELAY CONNECTOR LAYOUT DRAWING

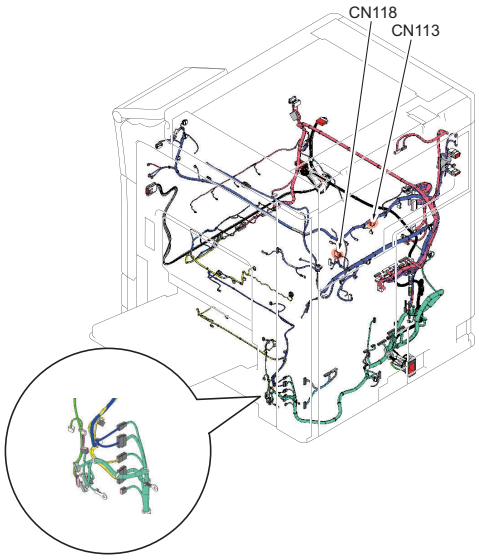

WIRING DIAGRAM

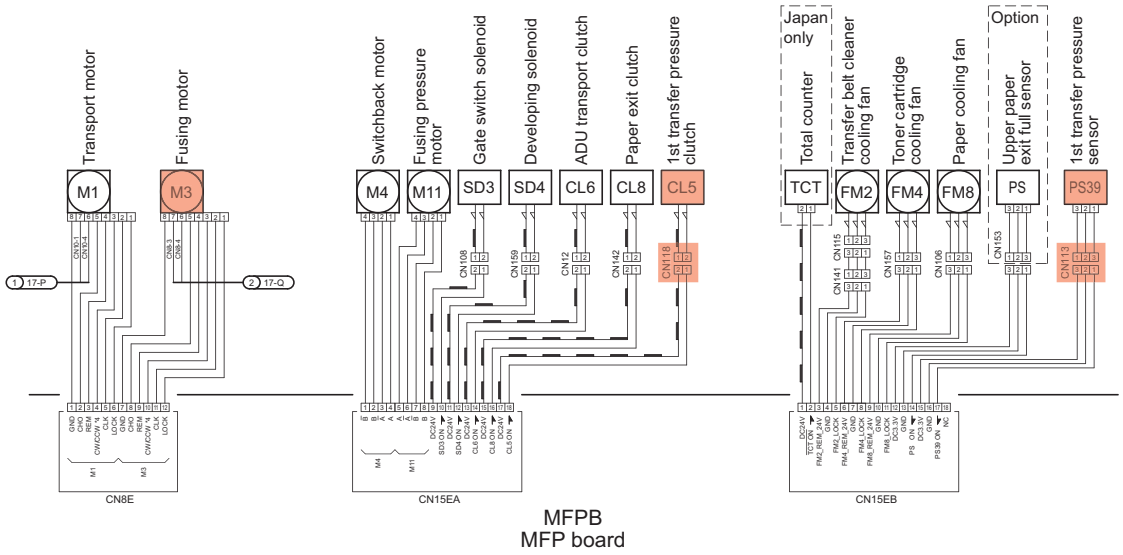

# 41. C2253, C2254

## PARTS LAYOUT DRAWING/1

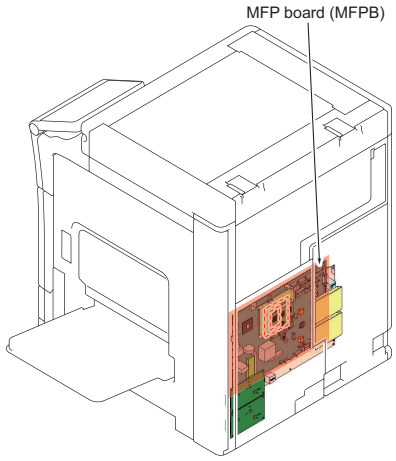


## PARTS LAYOUT DRAWING/2

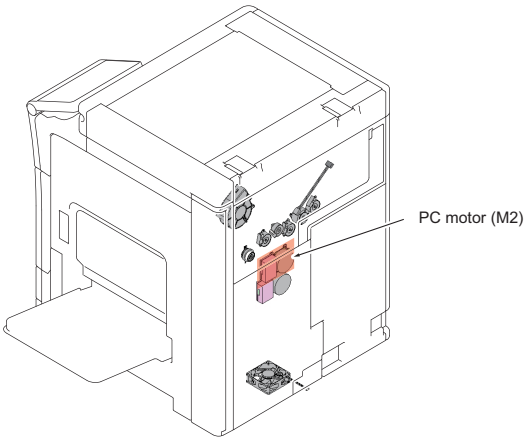


## BOARD CONNECTOR LAYOUT DRAWING (MFPB)

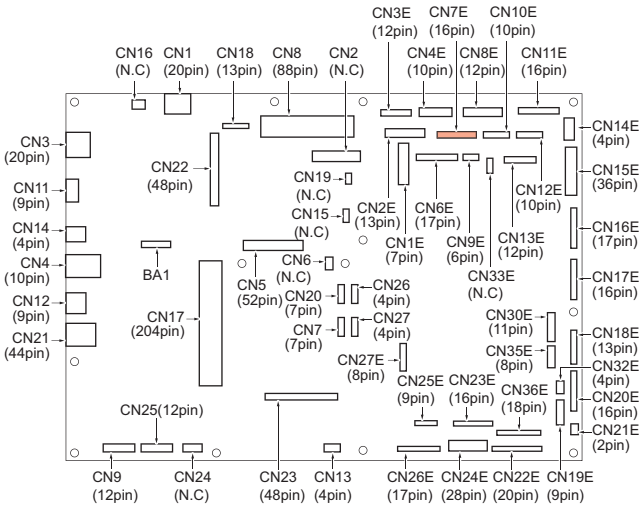


## WIRING DIAGRAM

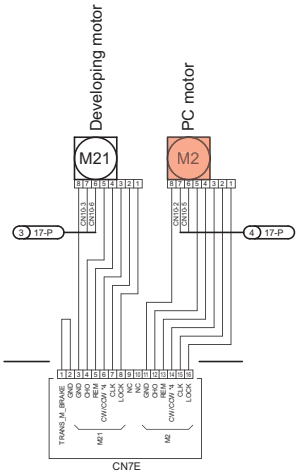


MFPB
MFP board

# 42. C2255, C2256

## PARTS LAYOUT DRAWING/1

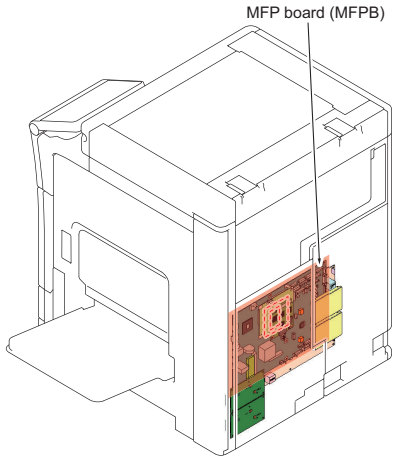


## PARTS LAYOUT DRAWING/2

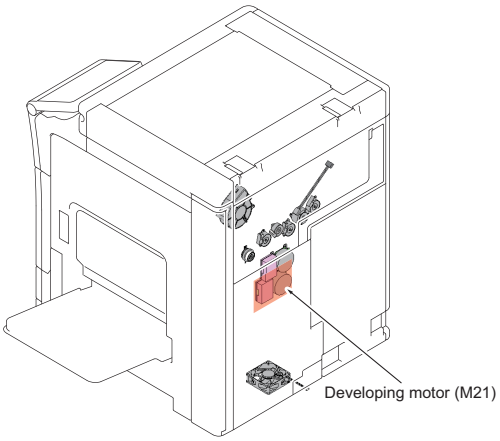


## BOARD CONNECTOR LAYOUT DRAWING (MFPB)

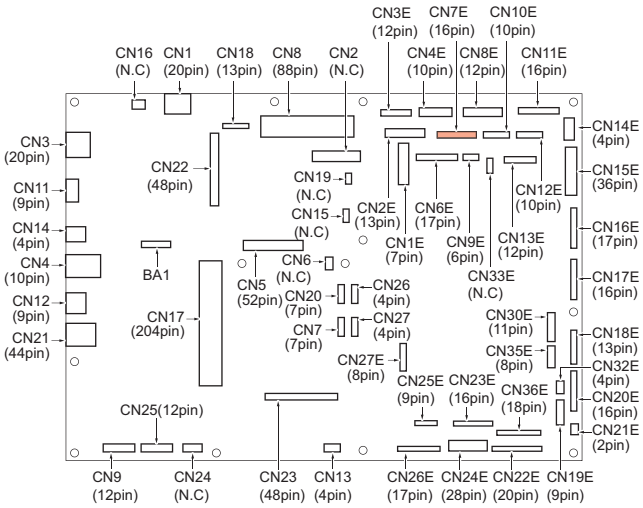


## WIRING DIAGRAM

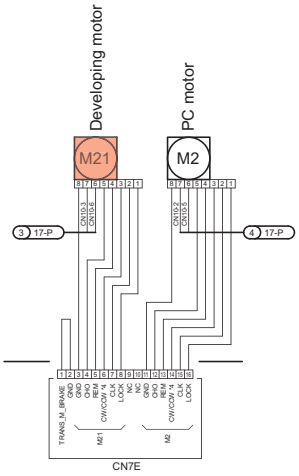


MFPB
MFP board

# 43. C2355

## PARTS LAYOUT DRAWING/1

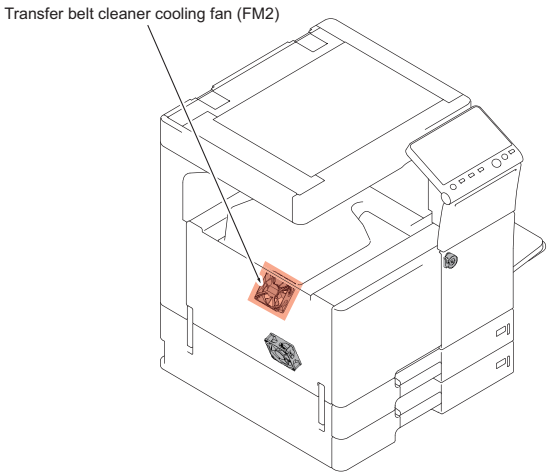


## PARTS LAYOUT DRAWING/2

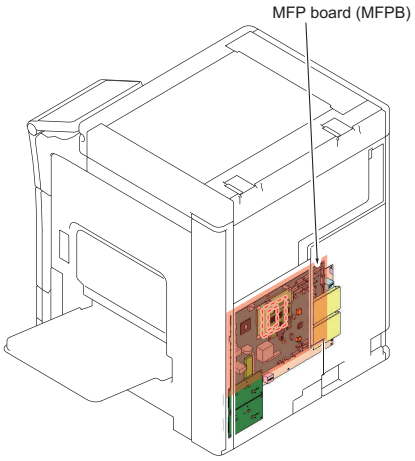


## BOARD CONNECTOR LAYOUT DRAWING (MFPB)

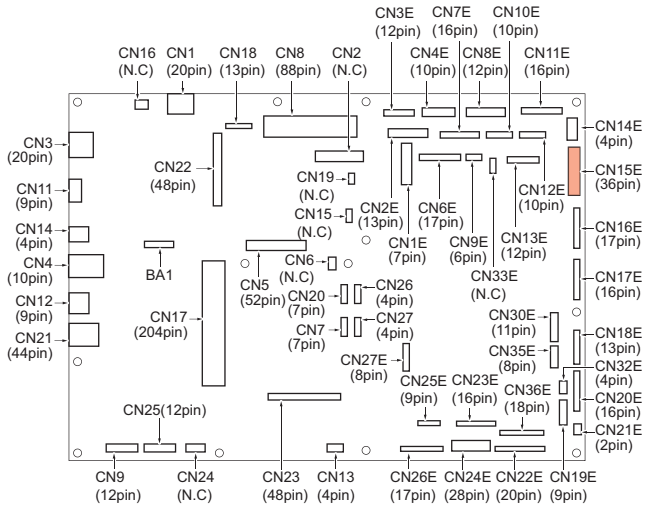


## WIRING DIAGRAM

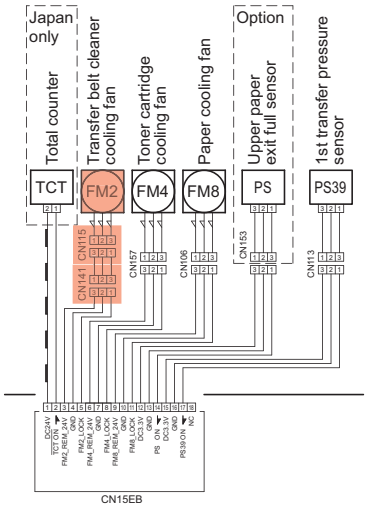


MFPB
MFP board

## RELAY CONNECTOR LAYOUT DRAWING/1

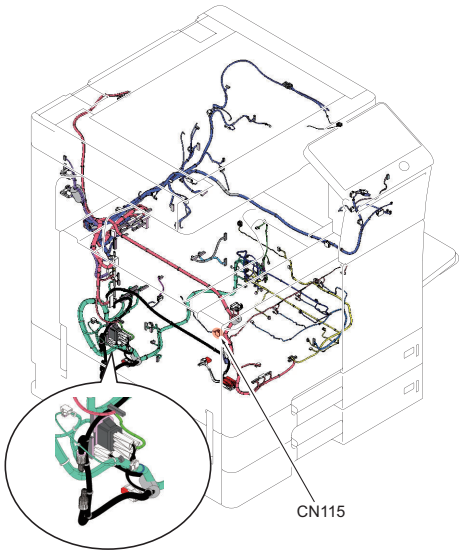


## RELAY CONNECTOR LAYOUT DRAWING/2

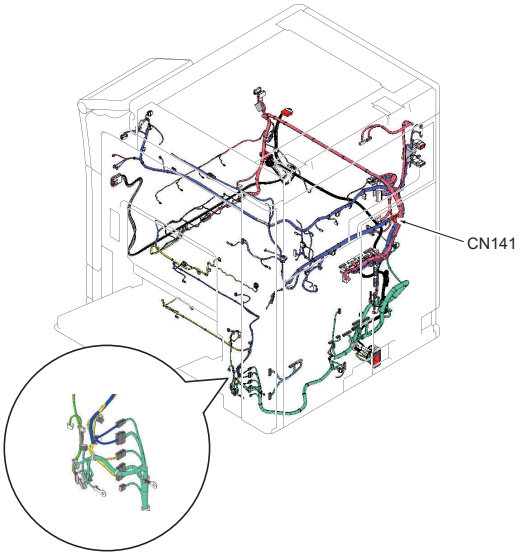

# 44. C2411, C2552, C2561

## PARTS LAYOUT DRAWING/1

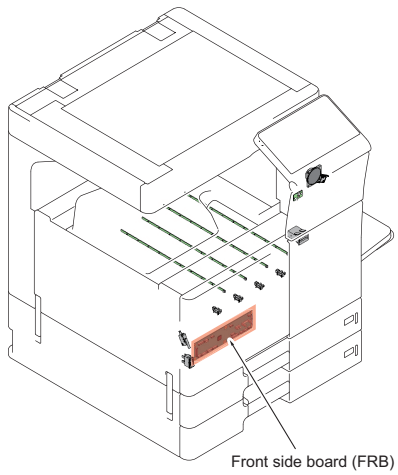


## PARTS LAYOUT DRAWING/2

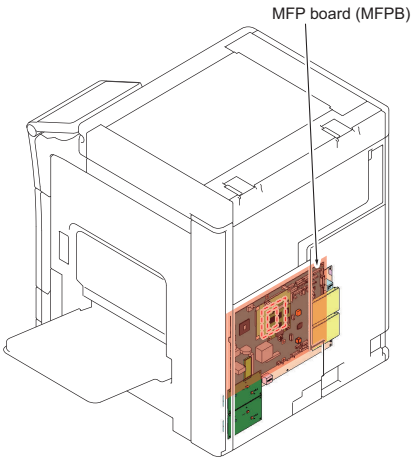


## BOARD CONNECTOR LAYOUT DRAWING (MFPB)

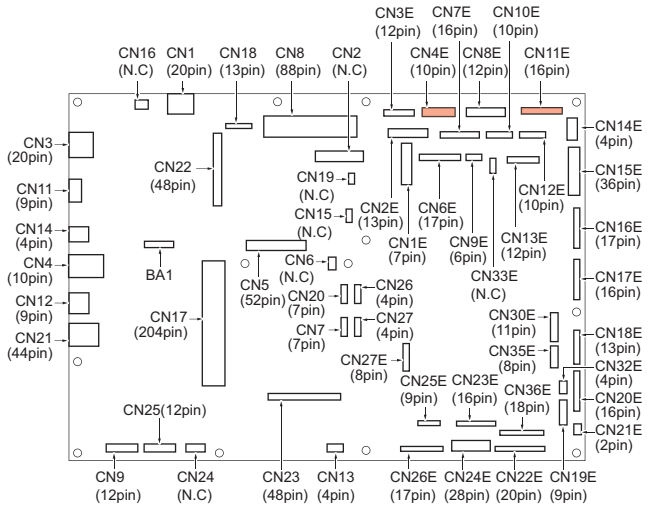


## BOARD CONNECTOR LAYOUT DRAWING (FRB)

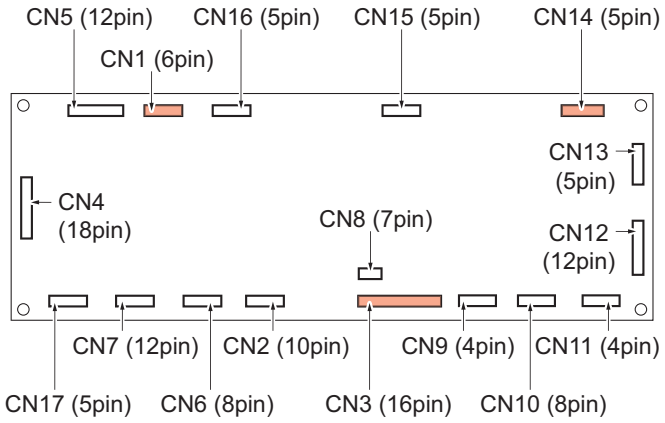


## WIRING DIAGRAM

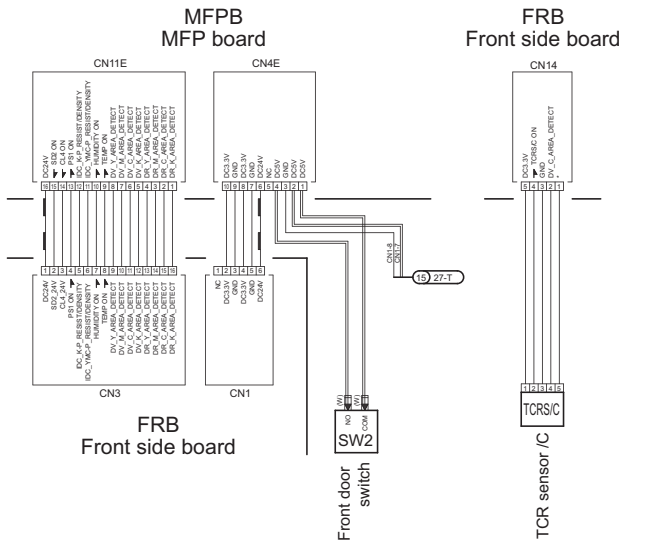

# 45. C2412, C2554, C2562

## PARTS LAYOUT DRAWING/1

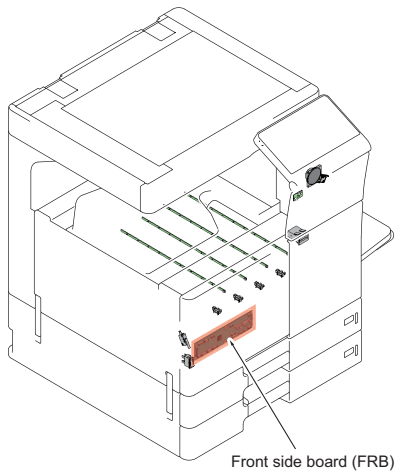


## PARTS LAYOUT DRAWING/2

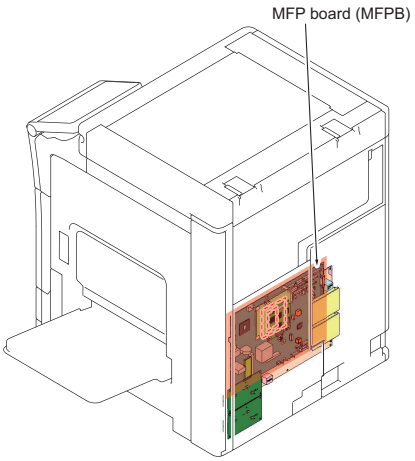


## BOARD CONNECTOR LAYOUT DRAWING (MFPB)

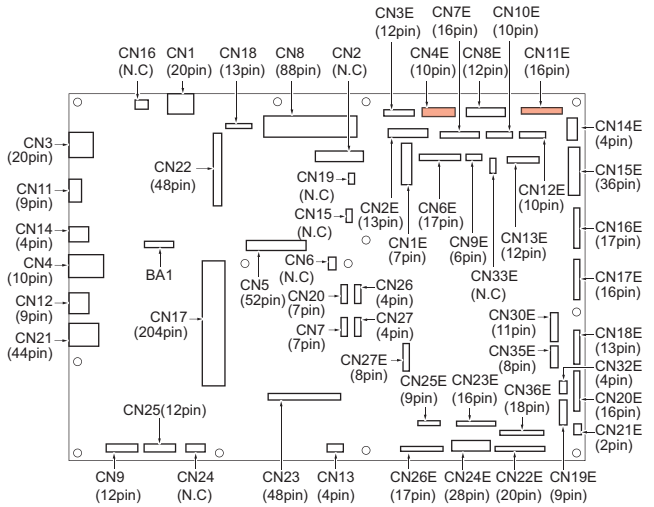


## BOARD CONNECTOR LAYOUT DRAWING (FRB)

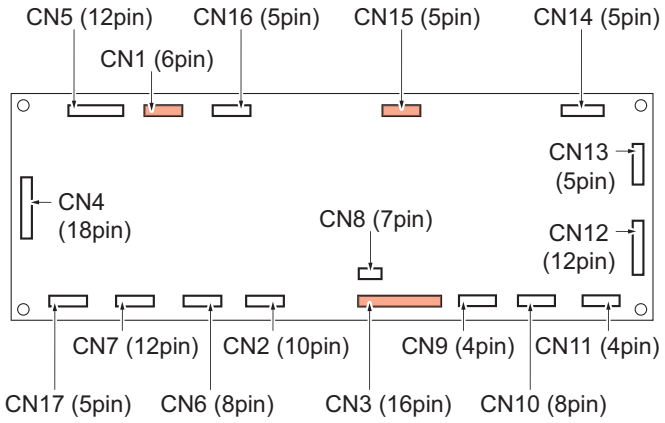


## WIRING DIAGRAM

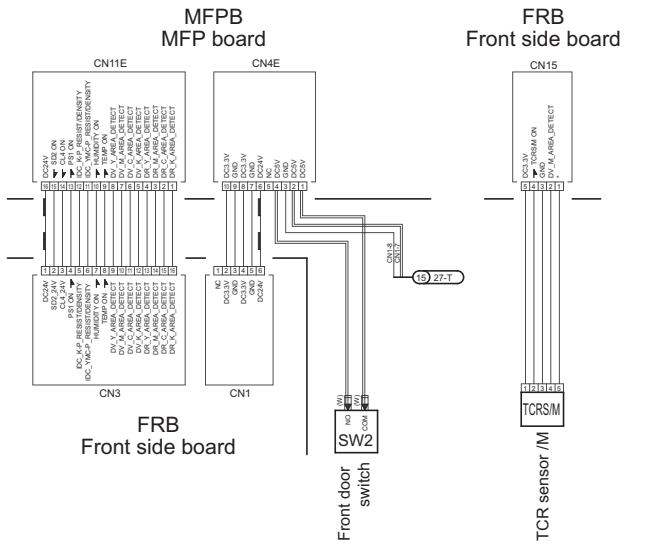

# 46. C2413, C2556, C2563

## PARTS LAYOUT DRAWING/1

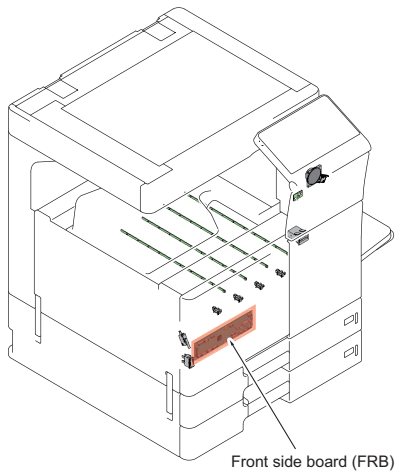


## PARTS LAYOUT DRAWING/2

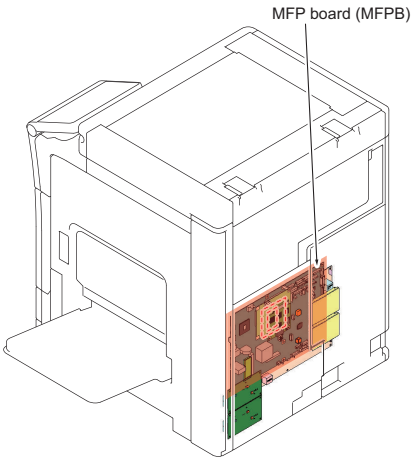


## BOARD CONNECTOR LAYOUT DRAWING (MFPB)

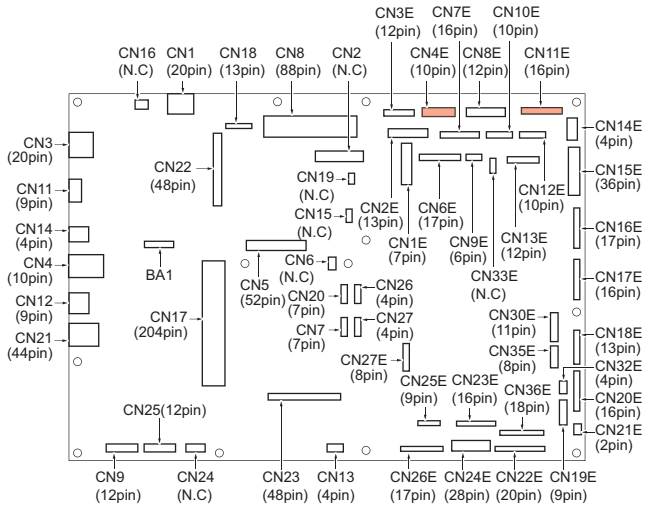


## BOARD CONNECTOR LAYOUT DRAWING (FRB)

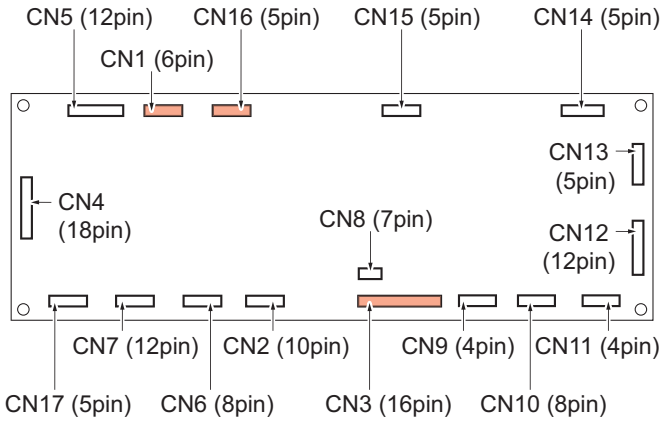


## WIRING DIAGRAM

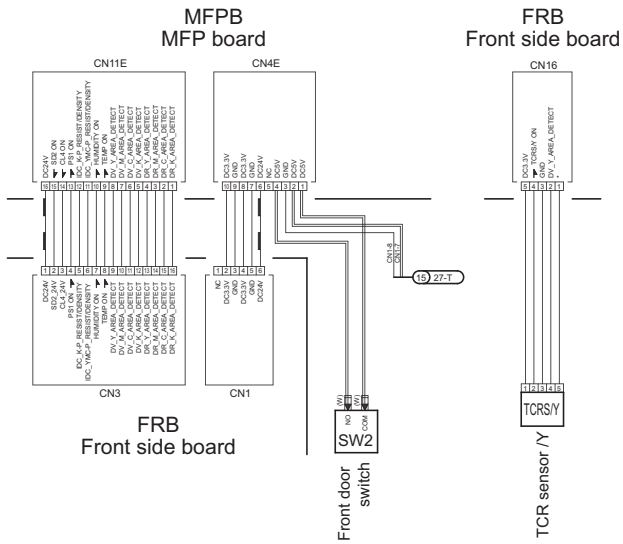

# 47. C2414, C2558, C2564

## PARTS LAYOUT DRAWING/1

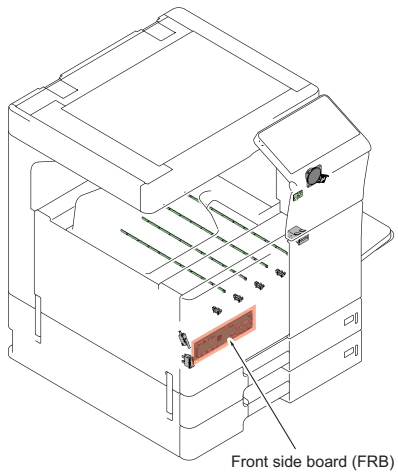


## PARTS LAYOUT DRAWING/2

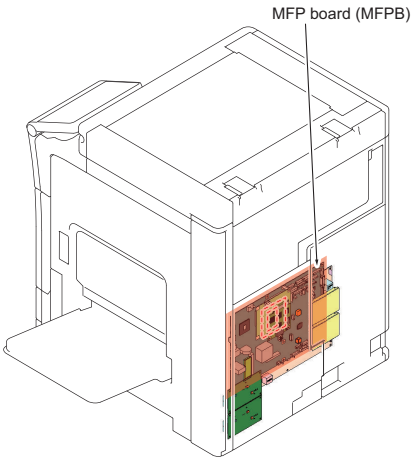


## BOARD CONNECTOR LAYOUT DRAWING (MFPB)

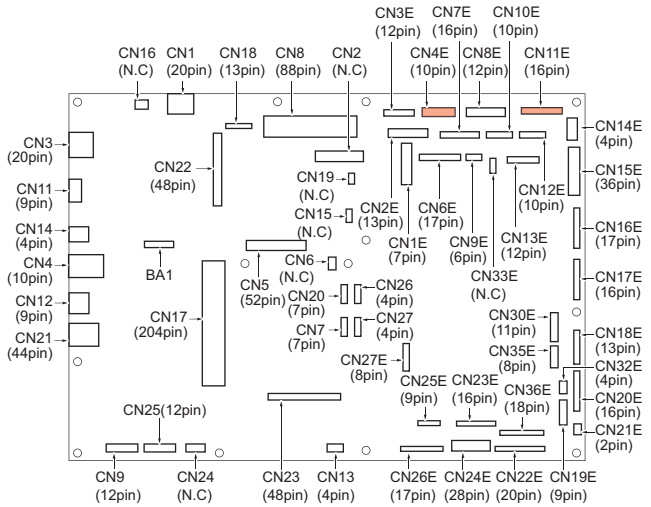


## BOARD CONNECTOR LAYOUT DRAWING (FRB)

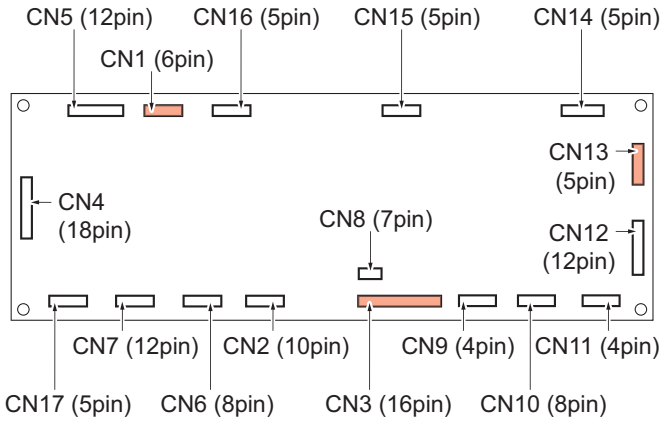


## WIRING DIAGRAM

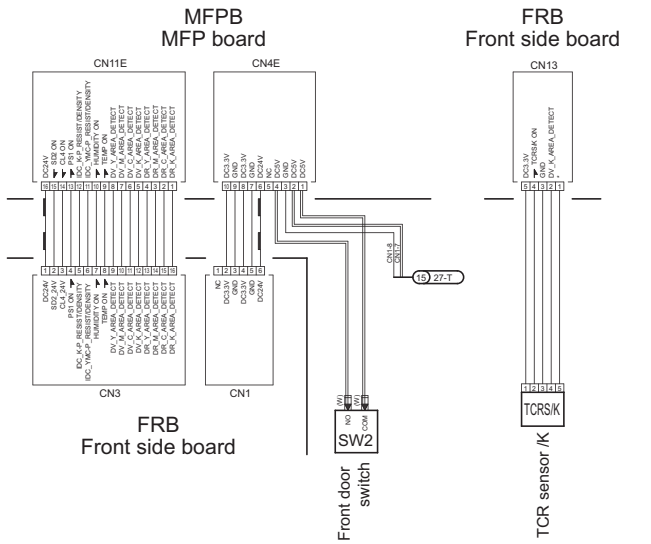

# 48. C2551

## PARTS LAYOUT DRAWING/1

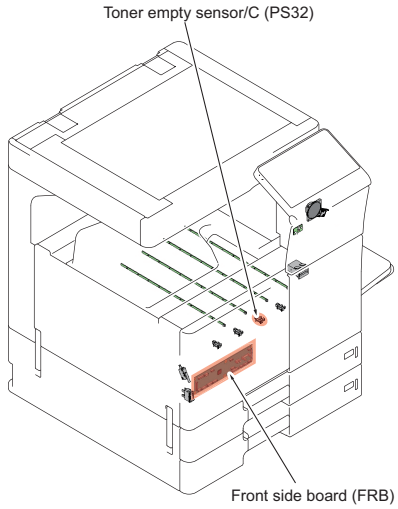


## PARTS LAYOUT DRAWING/2

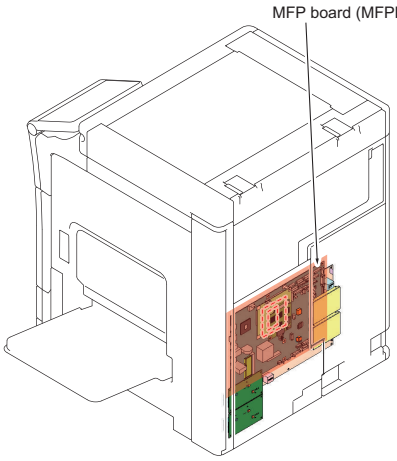


## PARTS LAYOUT DRAWING/3

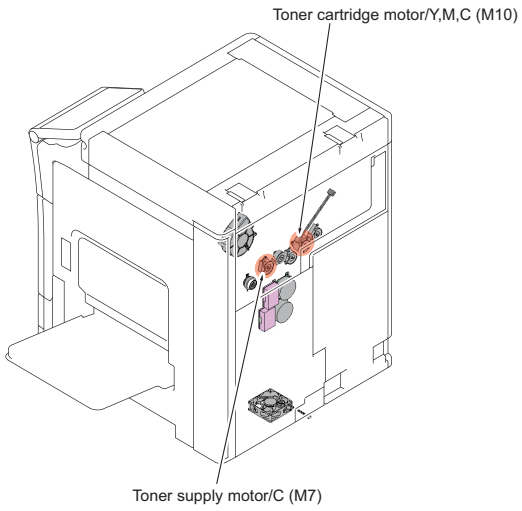


## BOARD CONNECTOR LAYOUT DRAWING (MFPB)

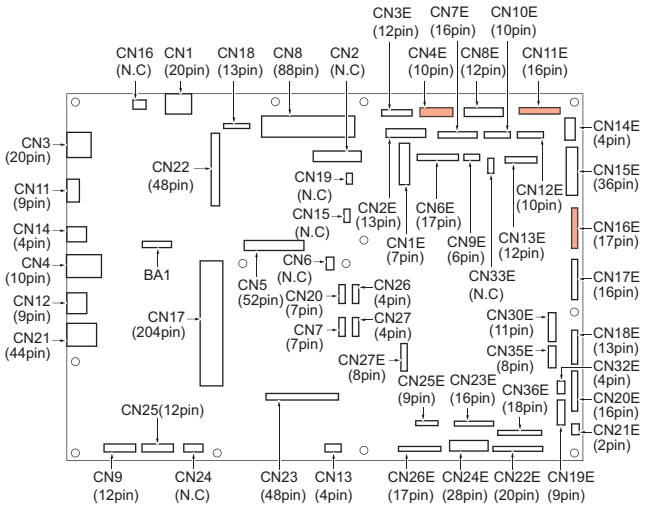


## BOARD CONNECTOR LAYOUT DRAWING (FRB)

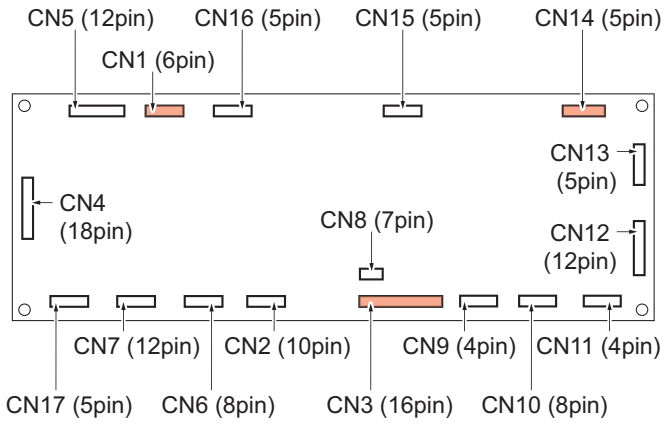


## WIRING DIAGRAM/1

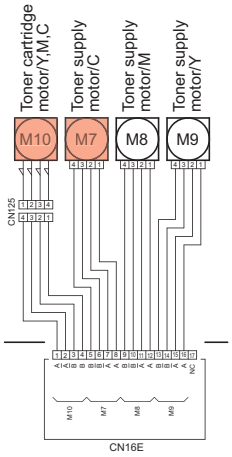


MFPB
MFP board

WIRING DIAGRAM/2

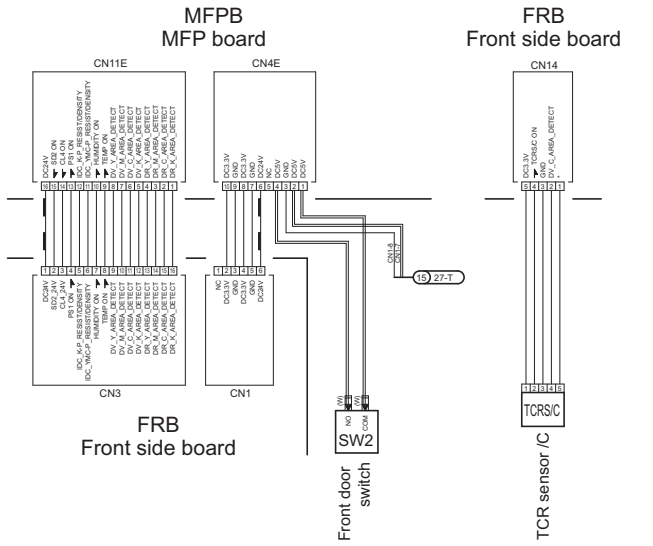

# 49. C2553

## PARTS LAYOUT DRAWING/1

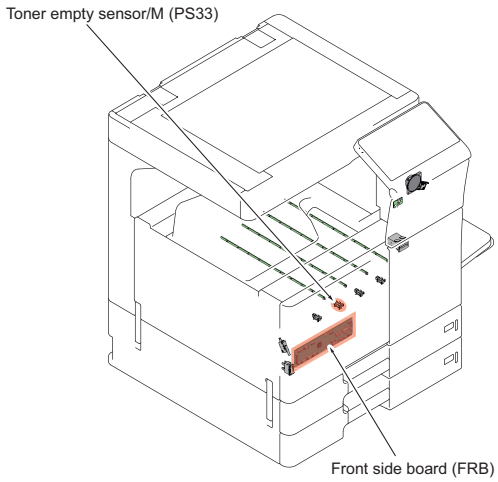


## PARTS LAYOUT DRAWING/2

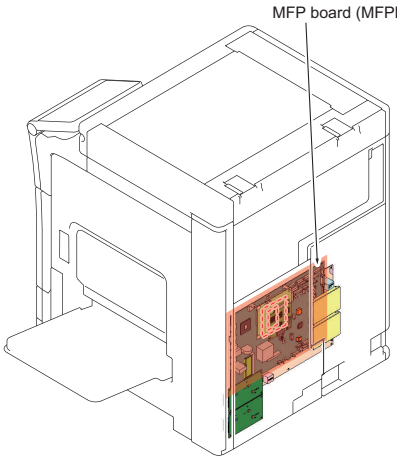


## PARTS LAYOUT DRAWING/3

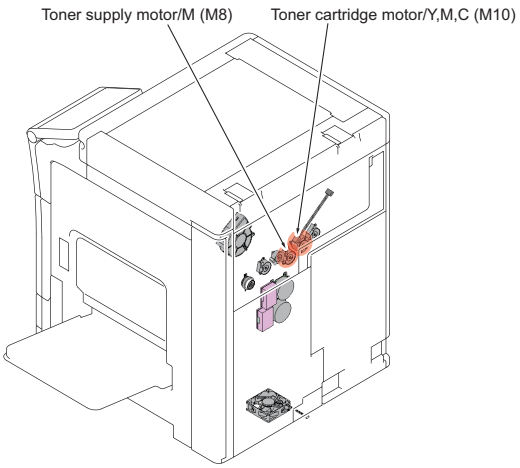


## BOARD CONNECTOR LAYOUT DRAWING (MFPB)

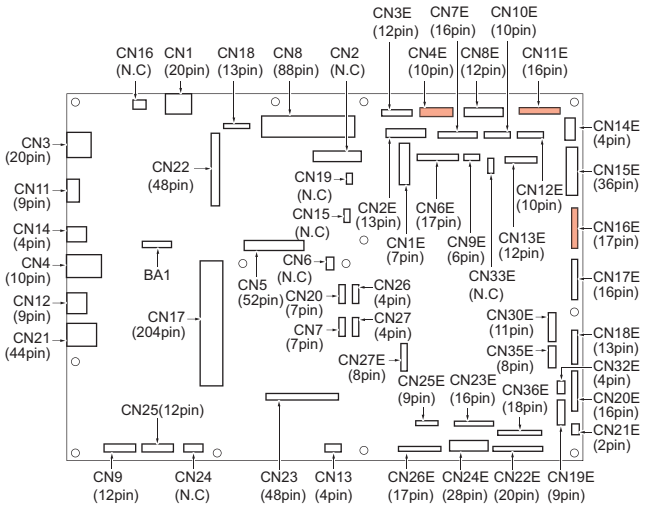


## BOARD CONNECTOR LAYOUT DRAWING (FRB)

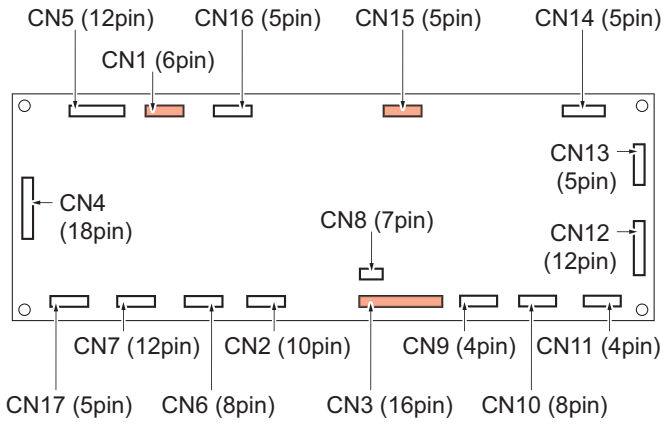


## WIRING DIAGRAM/1

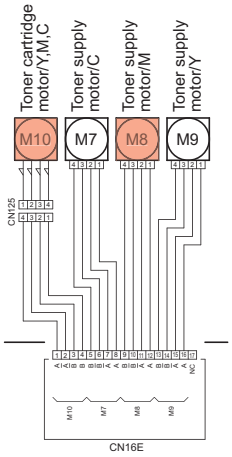


MFPB
MFP board

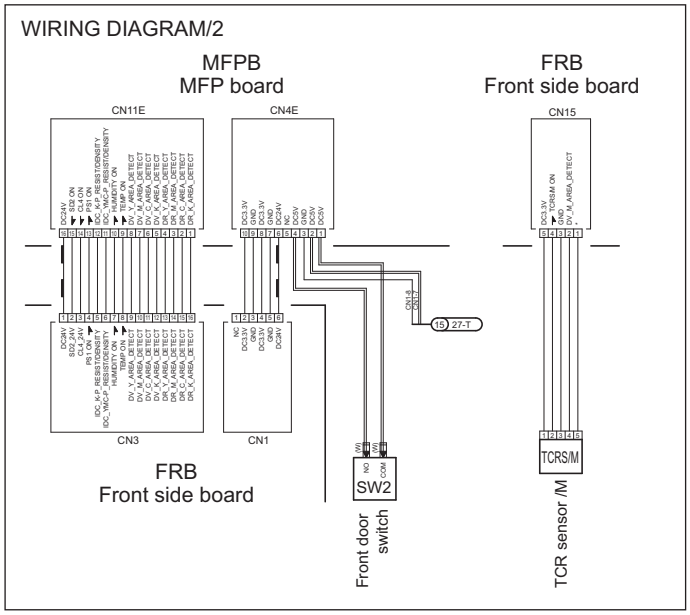
WIRING DIAGRAM/2
MFPB
MFP board
FRB
Front side board
CN11E
CN4E
CN15
CN3
CN1
FRB
Front side board
SW2
Front door switch
TCRS/M
TCR sensor /M
27-T

# 50. C2555

## PARTS LAYOUT DRAWING/1

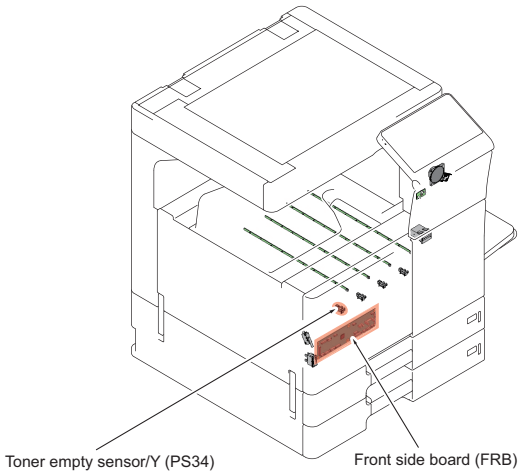


## PARTS LAYOUT DRAWING/2

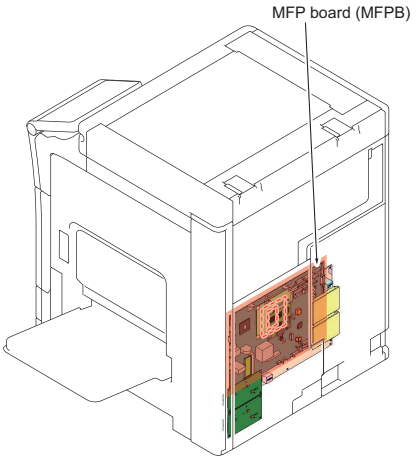


## PARTS LAYOUT DRAWING/3

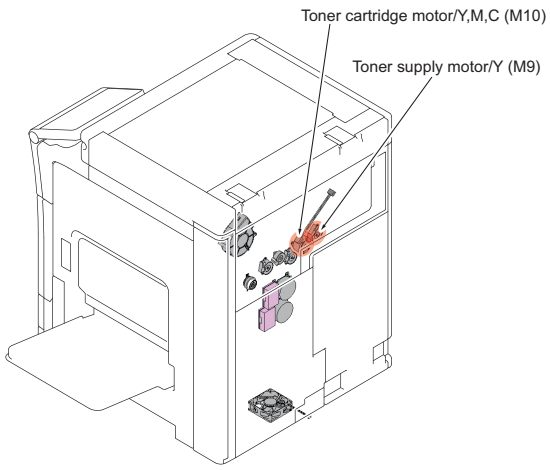


## BOARD CONNECTOR LAYOUT DRAWING (MFPB)

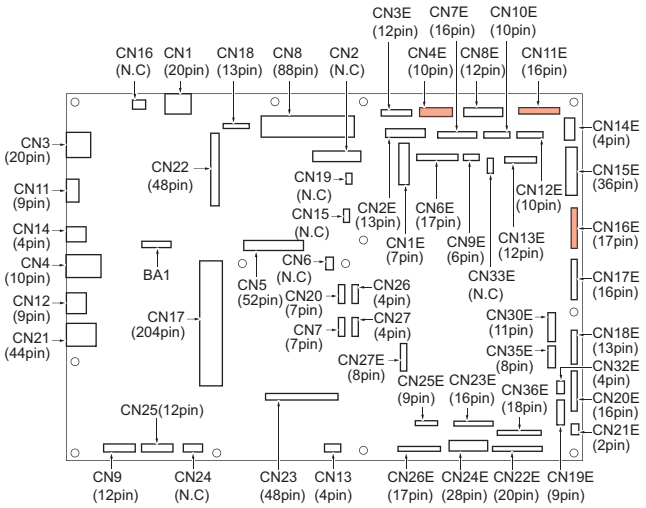


## BOARD CONNECTOR LAYOUT DRAWING (FRB)

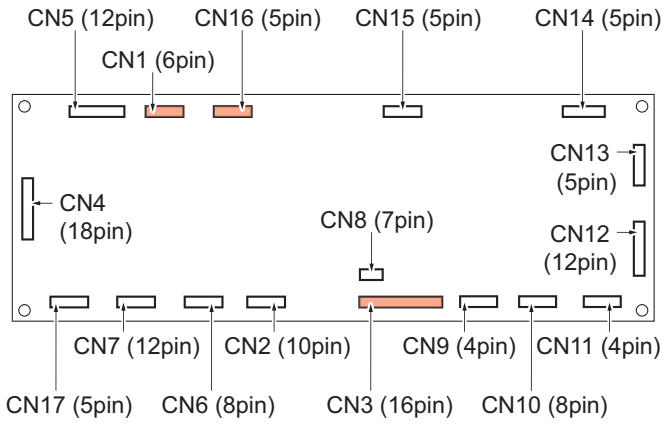


## WIRING DIAGRAM/1

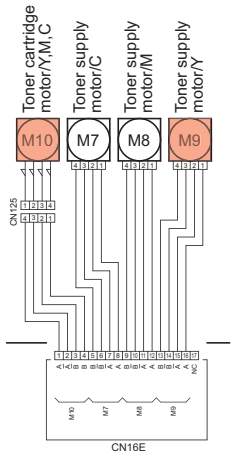


MFPB
MFP board

WIRING DIAGRAM/2

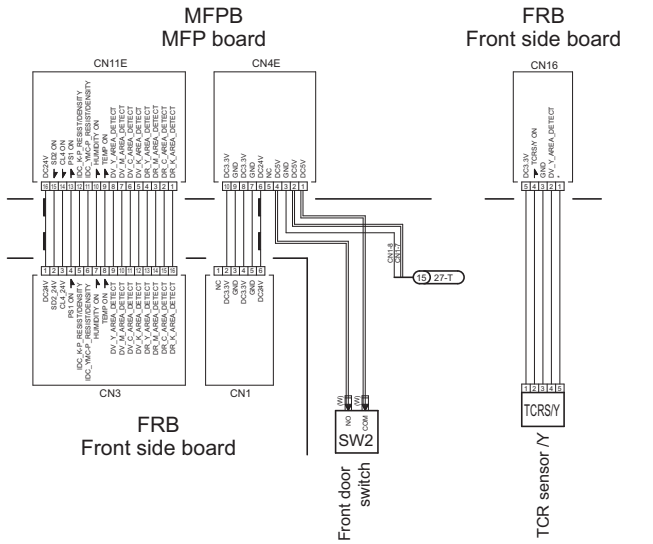

# 51. C2557

## PARTS LAYOUT DRAWING/1

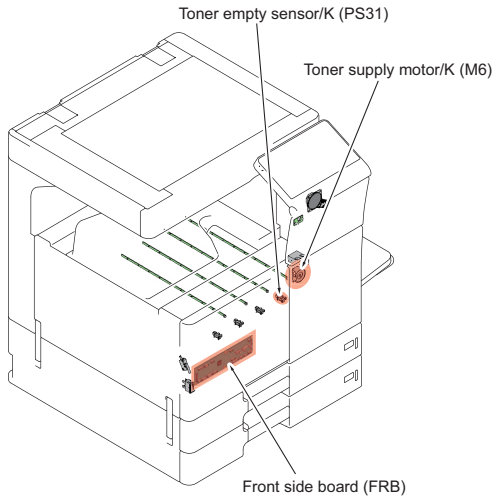


## PARTS LAYOUT DRAWING/2

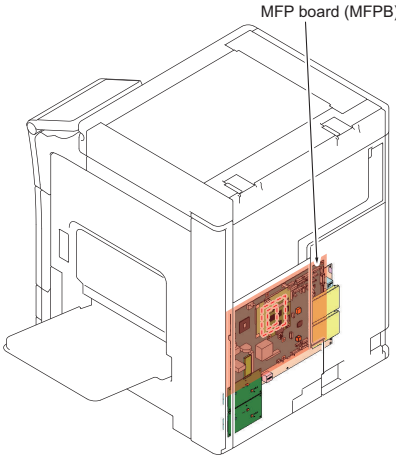


## PARTS LAYOUT DRAWING/3

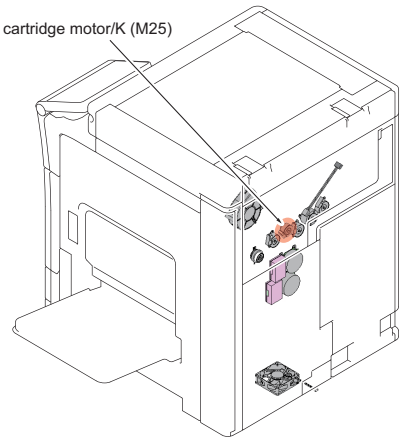


## BOARD CONNECTOR LAYOUT DRAWING (MFPB)

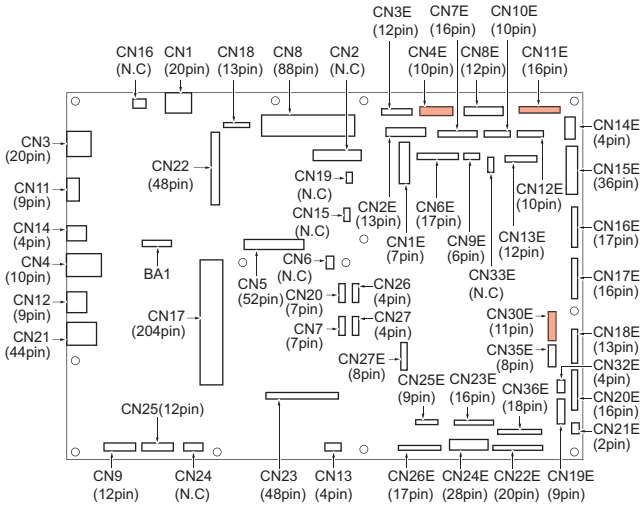


## BOARD CONNECTOR LAYOUT DRAWING (FRB)

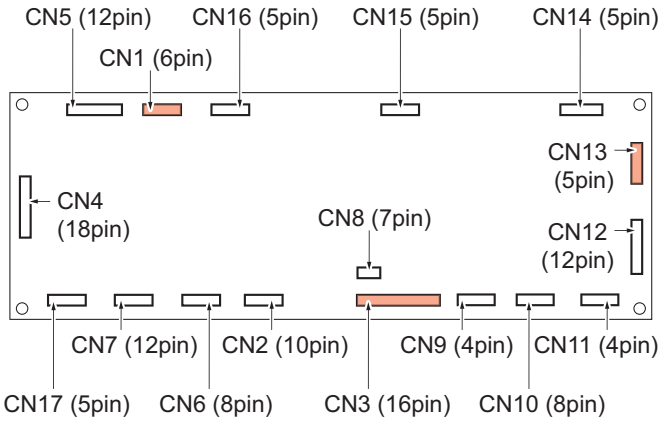


## WIRING DIAGRAM

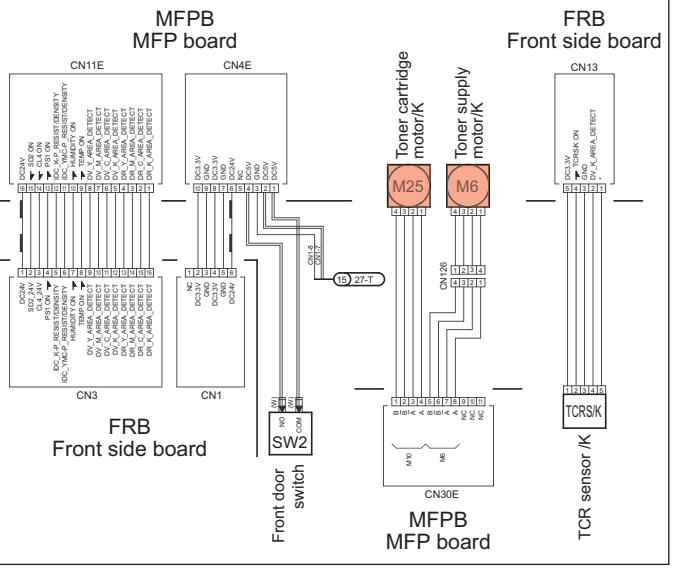

# 52. C2559

## PARTS LAYOUT DRAWING/1

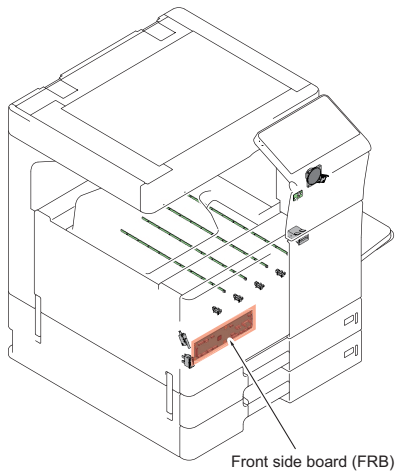


## PARTS LAYOUT DRAWING/2

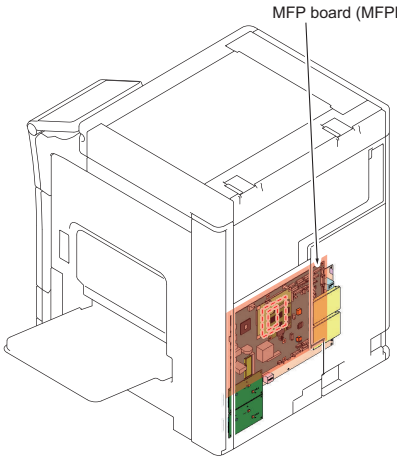


## PARTS LAYOUT DRAWING/3

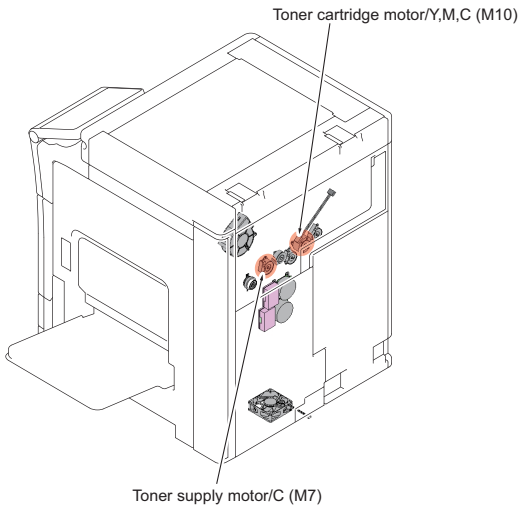


## BOARD CONNECTOR LAYOUT DRAWING (MFPB)

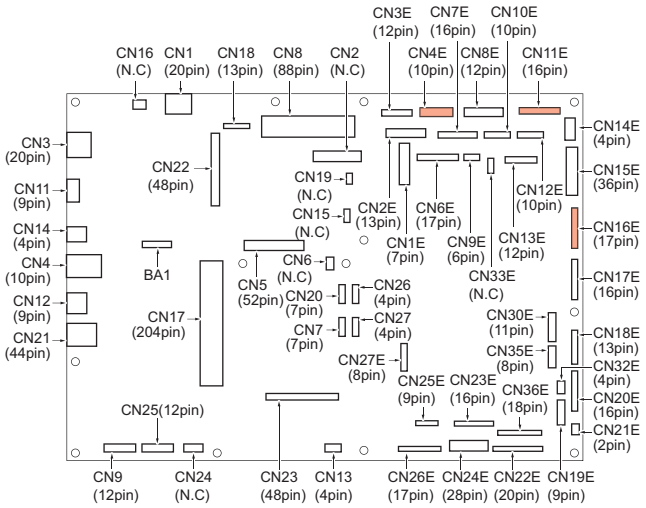


## BOARD CONNECTOR LAYOUT DRAWING (FRB)

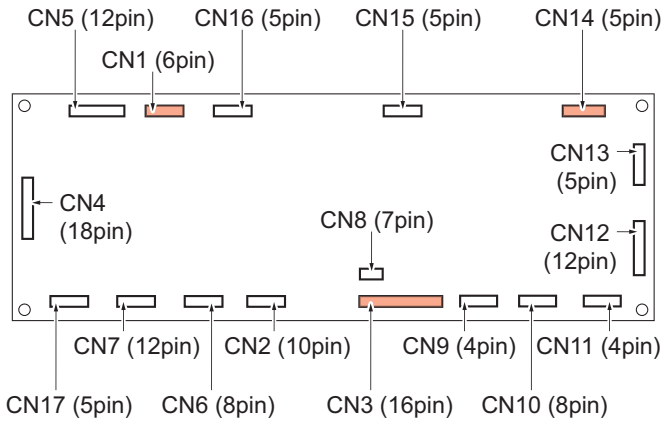


## WIRING DIAGRAM/1

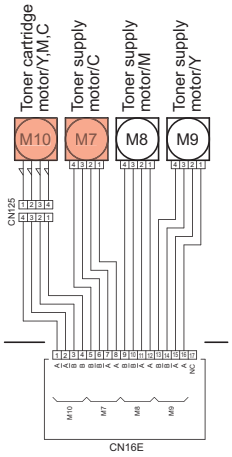


MFPB
MFP board

WIRING DIAGRAM/2

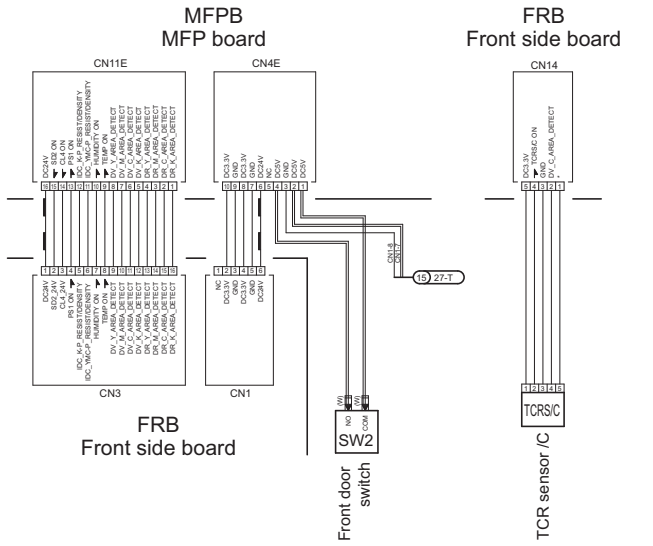

# 53. C255A

PARTS LAYOUT DRAWING/1

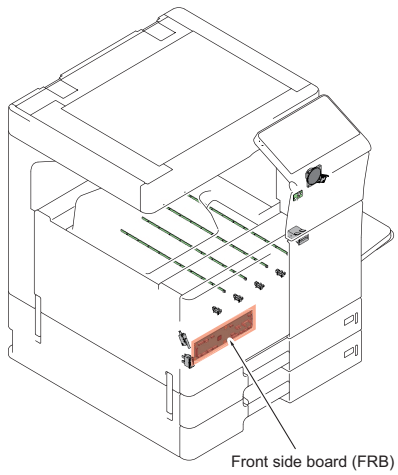


PARTS LAYOUT DRAWING/2

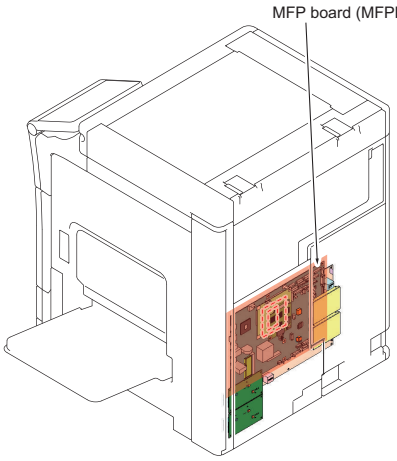


PARTS LAYOUT DRAWING/3

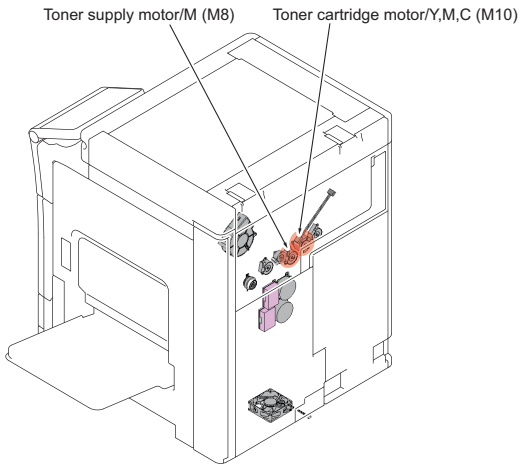


BOARD CONNECTOR LAYOUT DRAWING (MFPB)

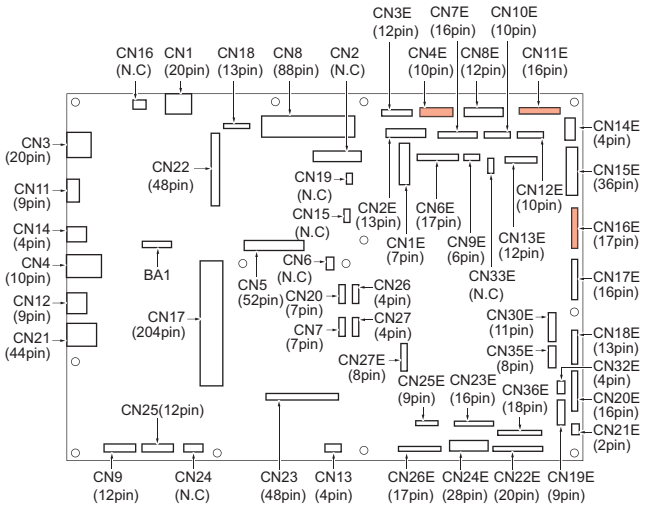


BOARD CONNECTOR LAYOUT DRAWING (FRB)

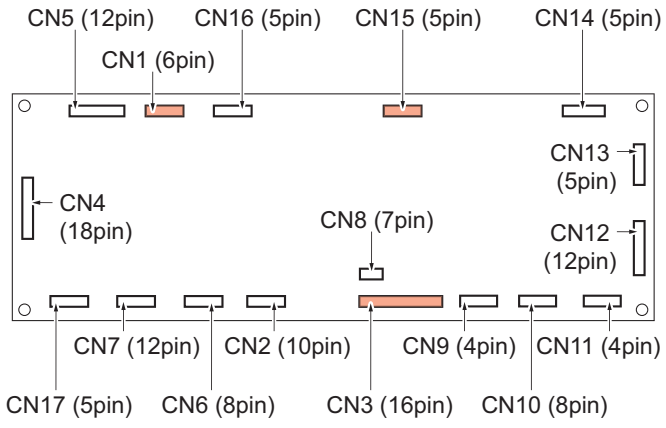


WIRING DIAGRAM/1

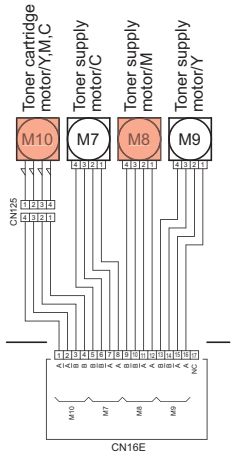


MFPB
MFP board

WIRING DIAGRAM/2

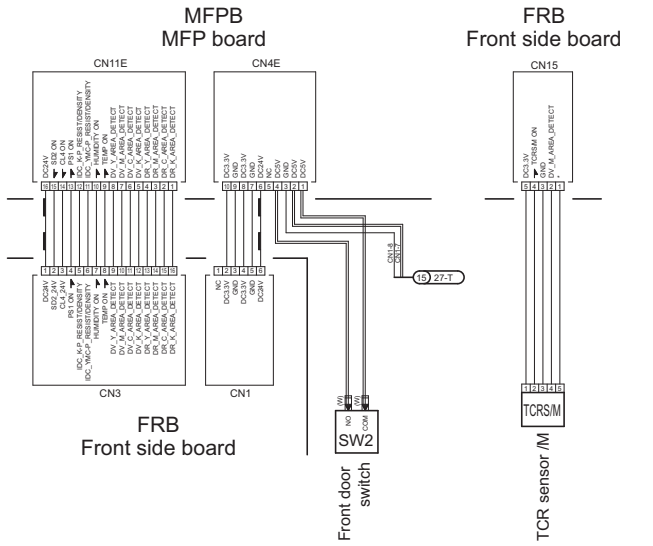

# 54. C255B

## PARTS LAYOUT DRAWING/1

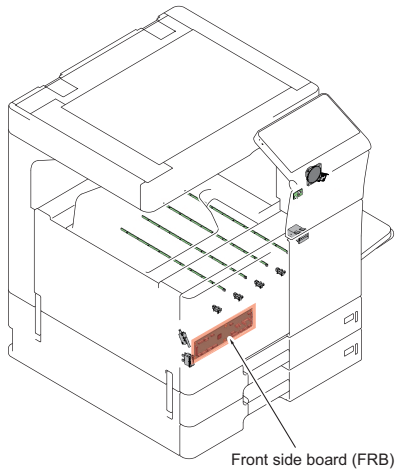


## PARTS LAYOUT DRAWING/2

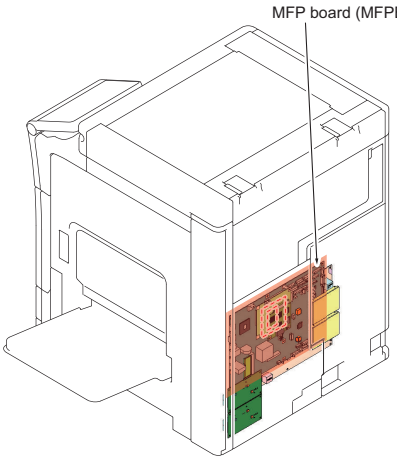


## PARTS LAYOUT DRAWING/3

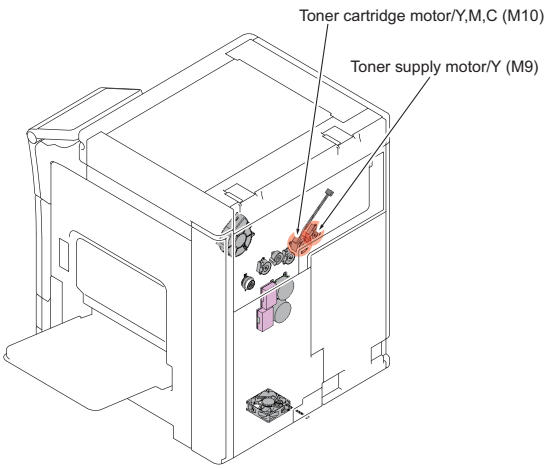


## BOARD CONNECTOR LAYOUT DRAWING (MFPB)

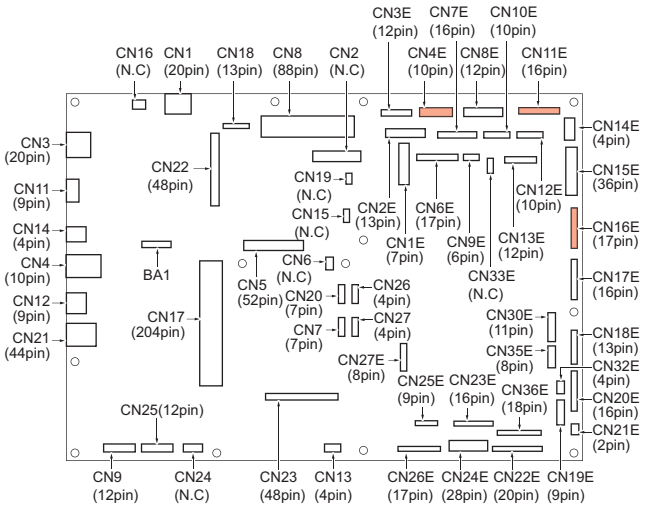


## BOARD CONNECTOR LAYOUT DRAWING (FRB)

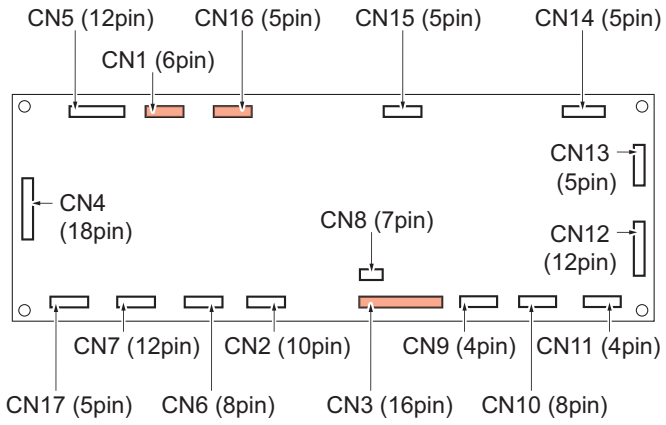


## WIRING DIAGRAM/1

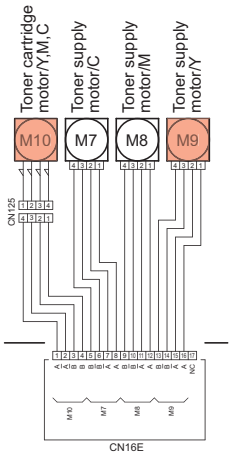


MFPB
MFP board

WIRING DIAGRAM/2

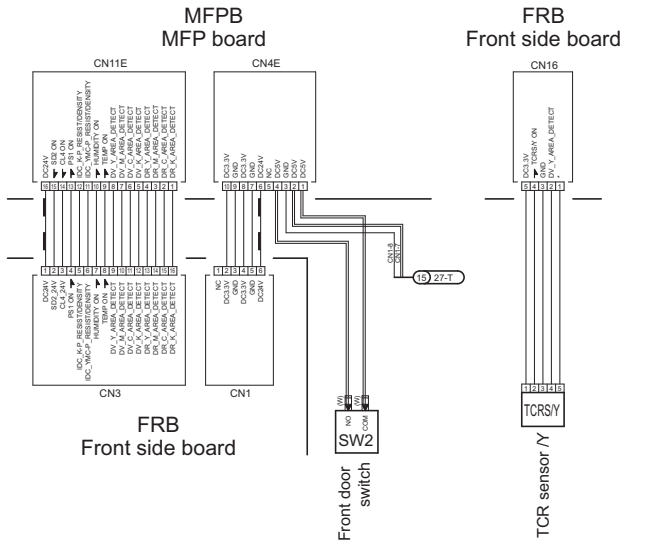

# 55. C255C

## PARTS LAYOUT DRAWING/1

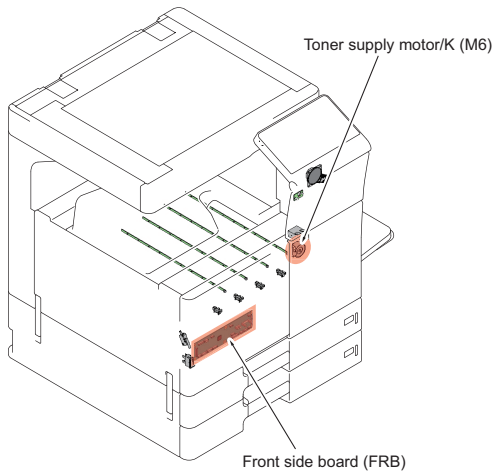


## PARTS LAYOUT DRAWING/2

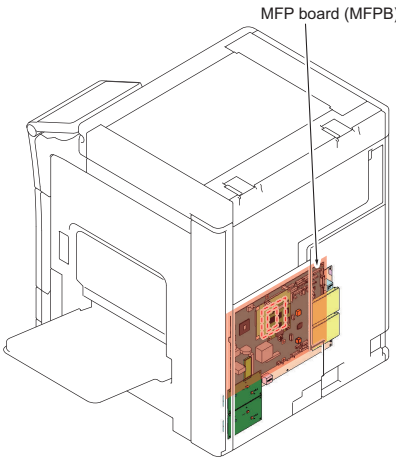


## PARTS LAYOUT DRAWING/3

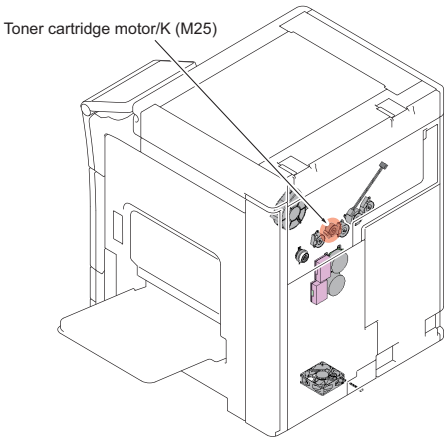


## BOARD CONNECTOR LAYOUT DRAWING (MFPB)

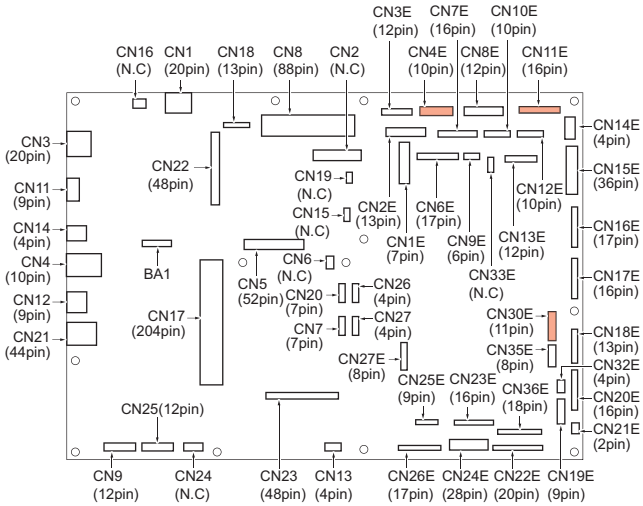


## BOARD CONNECTOR LAYOUT DRAWING (FRB)

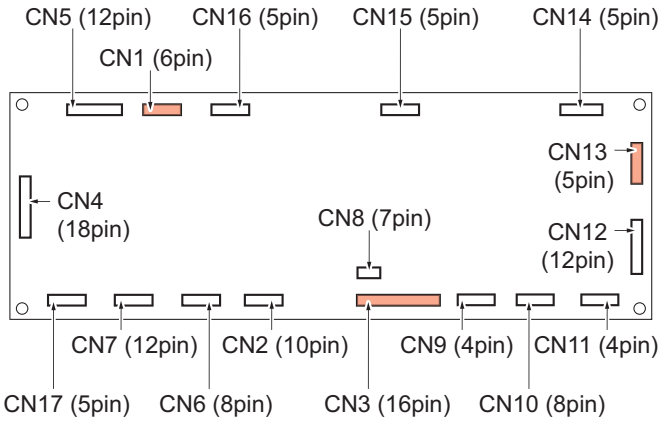


## WIRING DIAGRAM

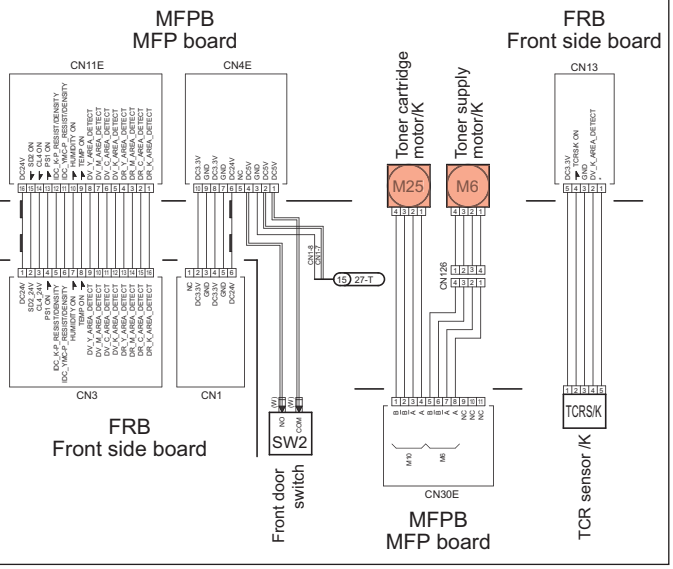

# 56. C2650, CC163

PARTS LAYOUT DRAWING

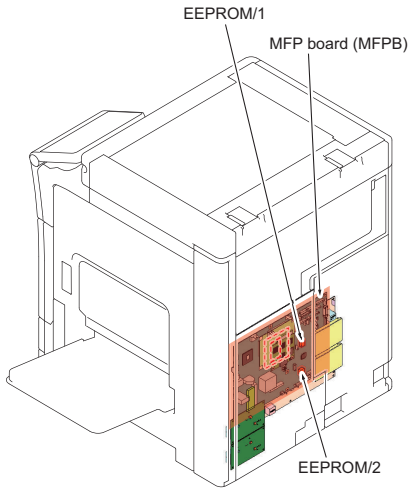

# 57. C2A11, C2A12, C2A13, C2A14

PARTS LAYOUT DRAWING/1

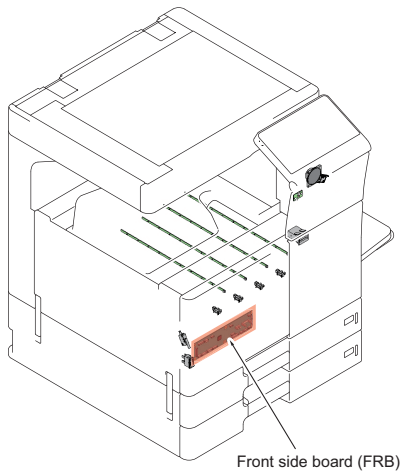


PARTS LAYOUT DRAWING/2

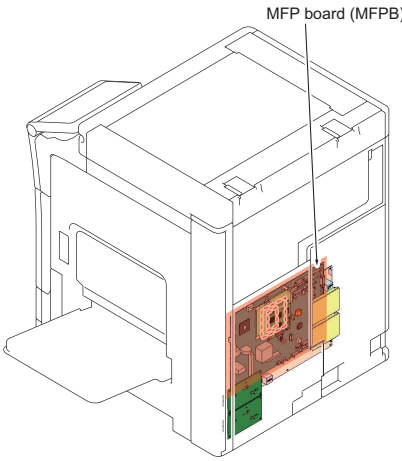


BOARD CONNECTOR LAYOUT DRAWING (MFPB)

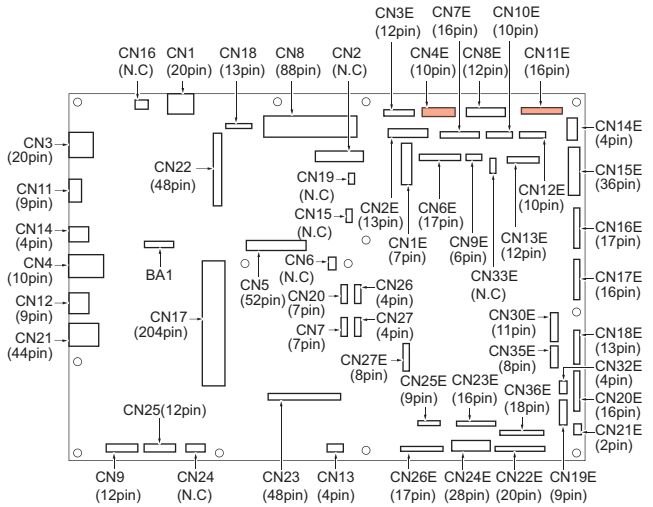


BOARD CONNECTOR LAYOUT DRAWING (FRB)

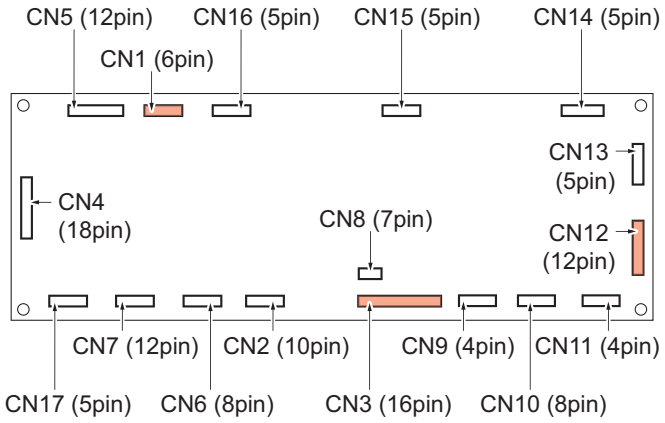


WIRING DIAGRAM

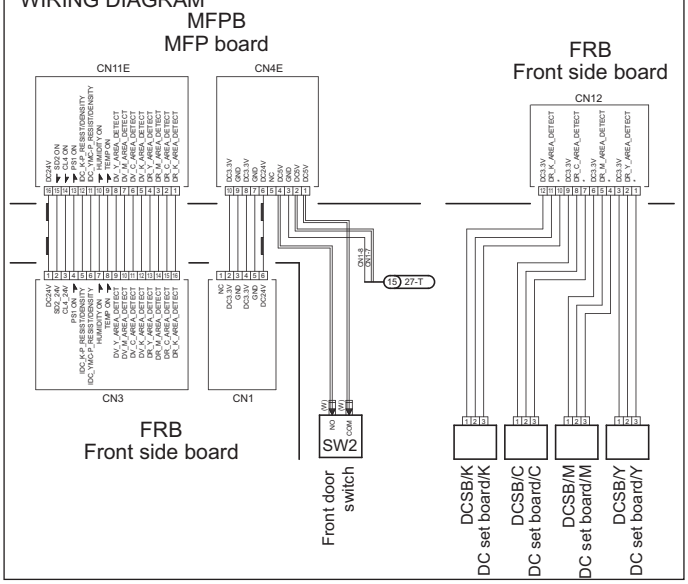

# 58. C2A21, C2A22, C2A23, C2A24

PARTS LAYOUT DRAWING

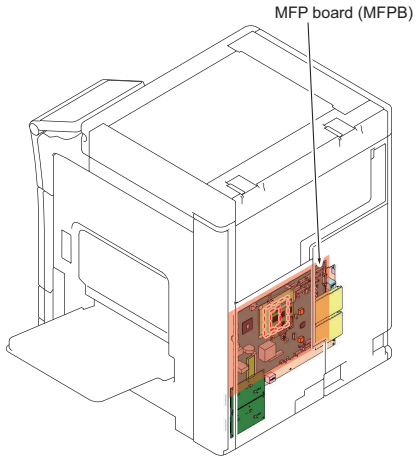


BOARD CONNECTOR LAYOUT DRAWING (MFPB)

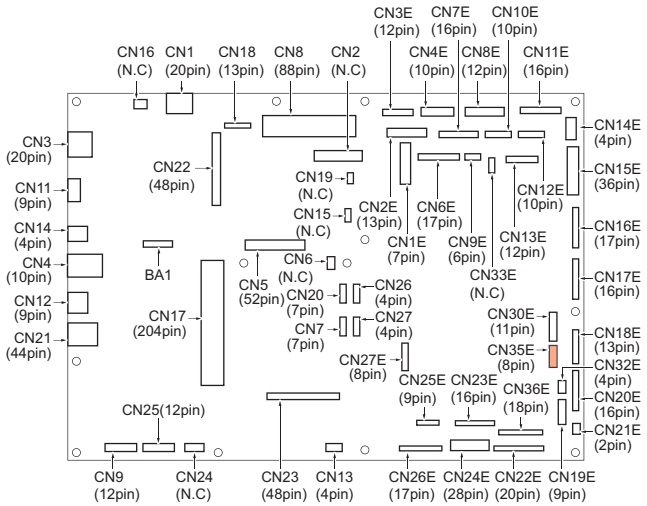

# 59. C3101, C3103

## PARTS LAYOUT DRAWING/1

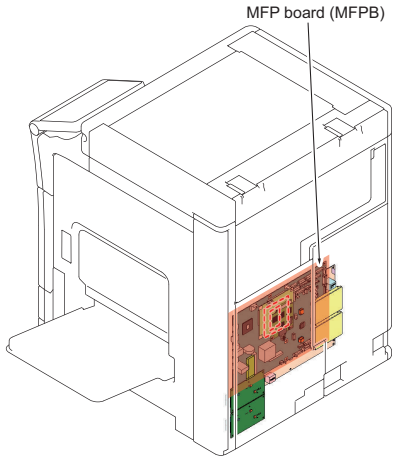


## PARTS LAYOUT DRAWING/2

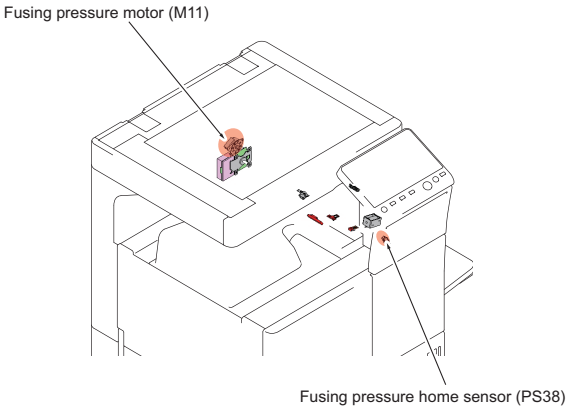


## BOARD CONNECTOR LAYOUT DRAWING (MFPB)

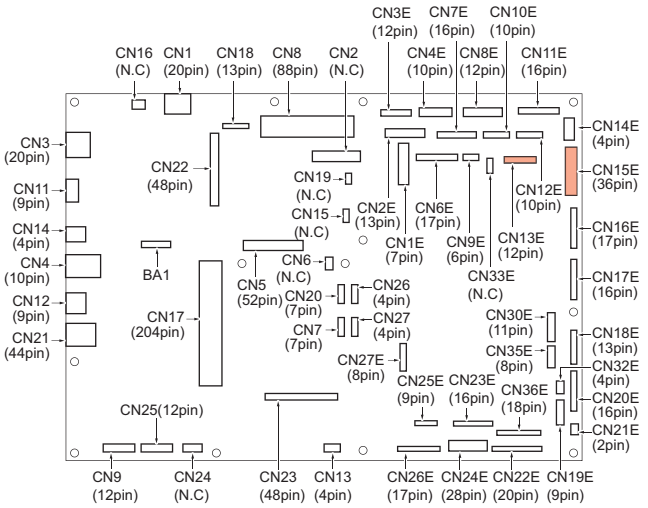


## WIRING DIAGRAM

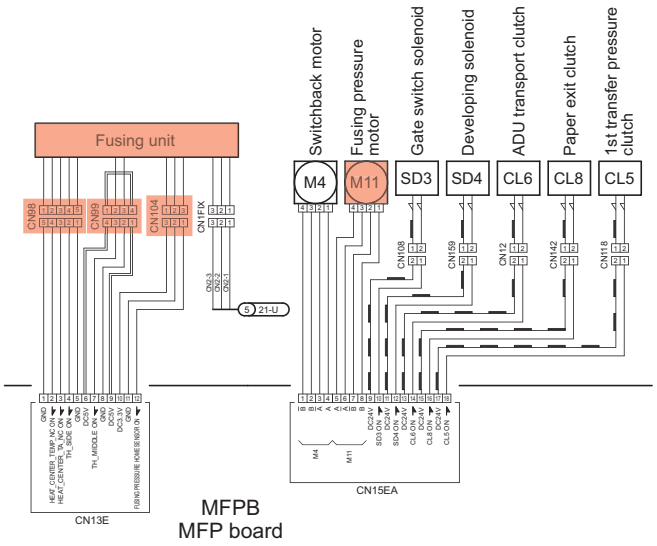


## RELAY CONNECTOR LAYOUT DRAWING

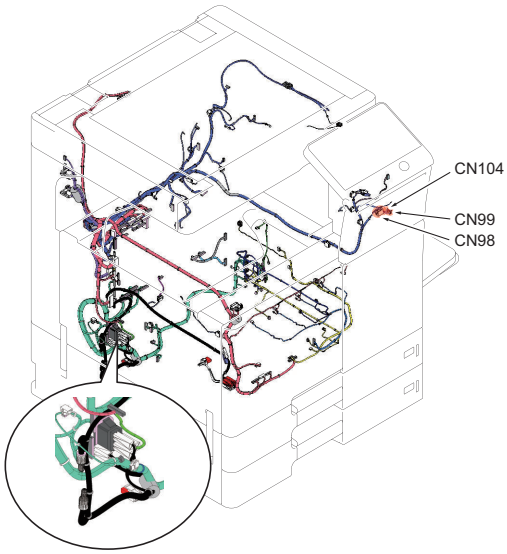

# 60. C3201, C3202

## PARTS LAYOUT DRAWING/1

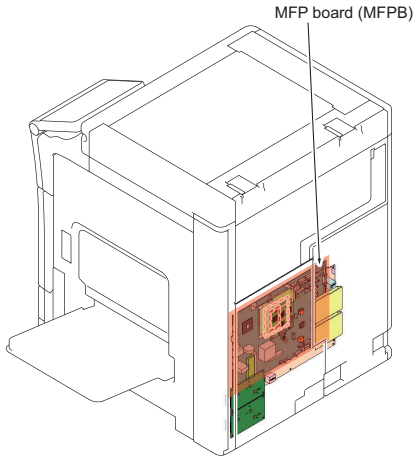


## PARTS LAYOUT DRAWING/2

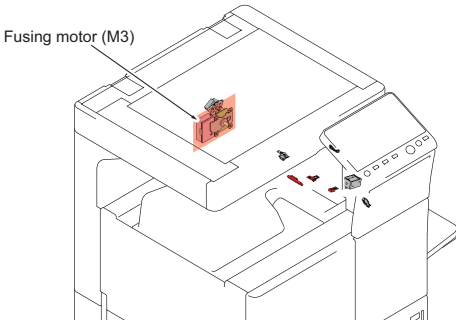


## BOARD CONNECTOR LAYOUT DRAWING (MFPB)

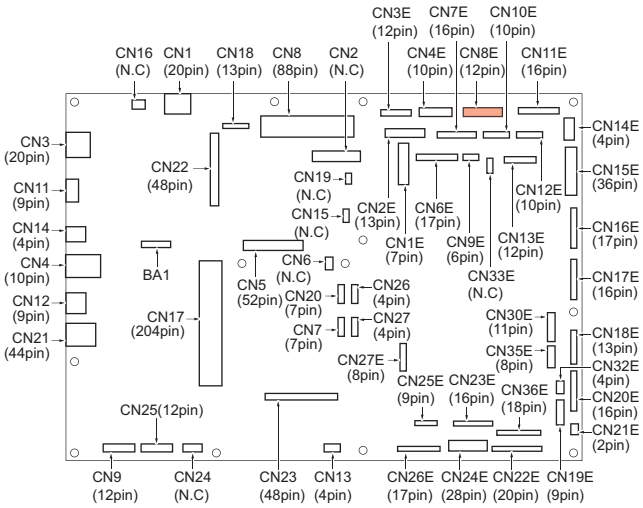


## WIRING DIAGRAM

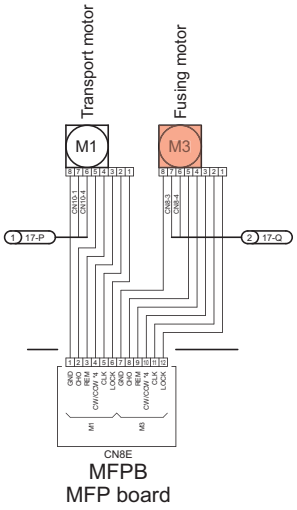

# 61. C3302

## PARTS LAYOUT DRAWING/1

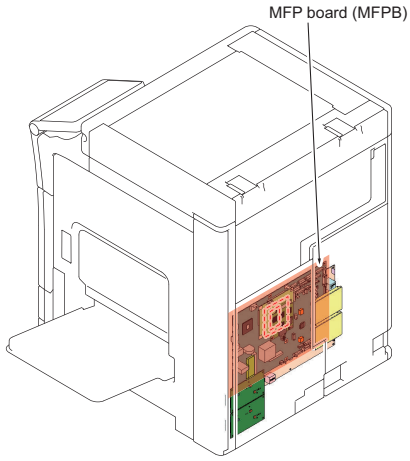


## PARTS LAYOUT DRAWING/2

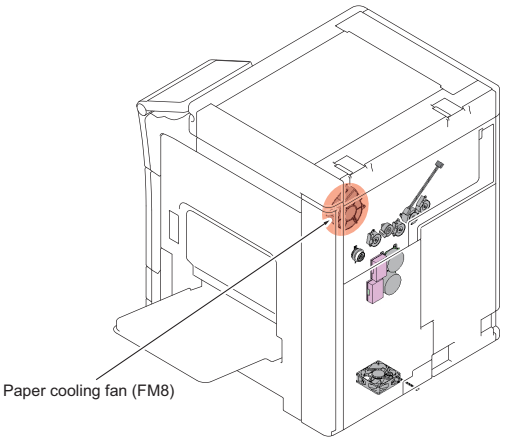


## BOARD CONNECTOR LAYOUT DRAWING (MFPB)

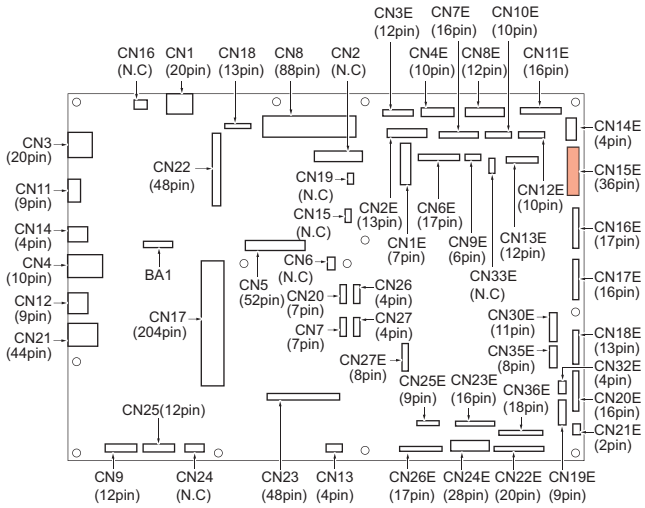


## WIRING DIAGRAM

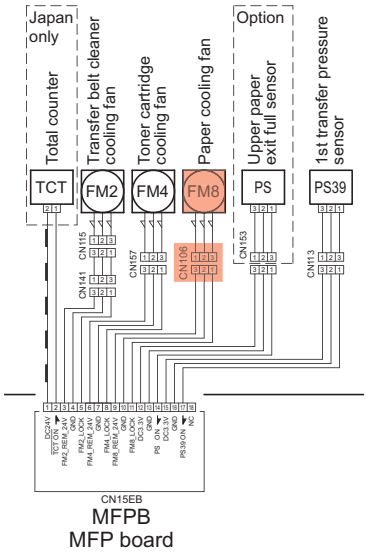


## RELAY CONNECTOR LAYOUT DRAWING

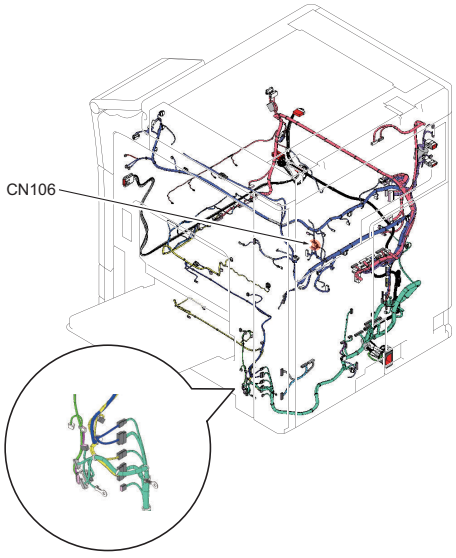

# 62. C3425

## PARTS LAYOUT DRAWING/1

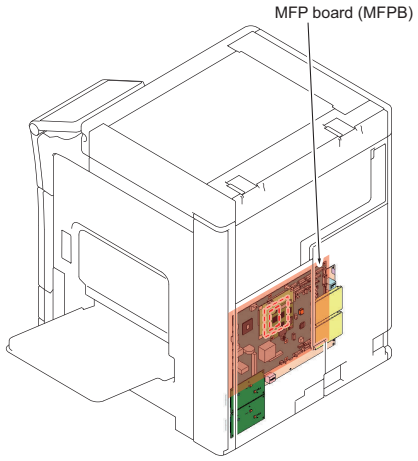


## PARTS LAYOUT DRAWING/2

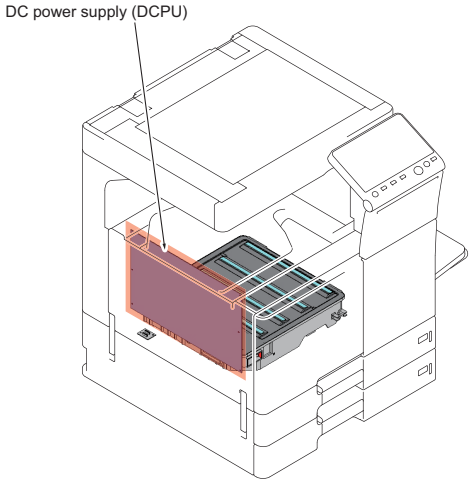


## PARTS LAYOUT DRAWING/3

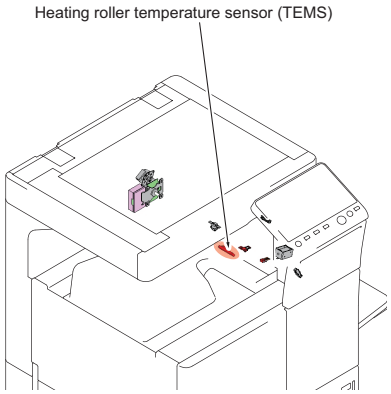


## BOARD CONNECTOR LAYOUT DRAWING (MFPB)

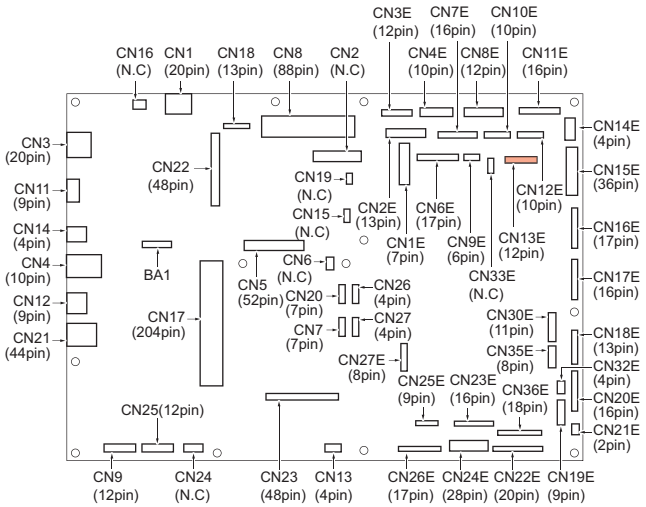


## BOARD CONNECTOR LAYOUT DRAWING (DCPU)

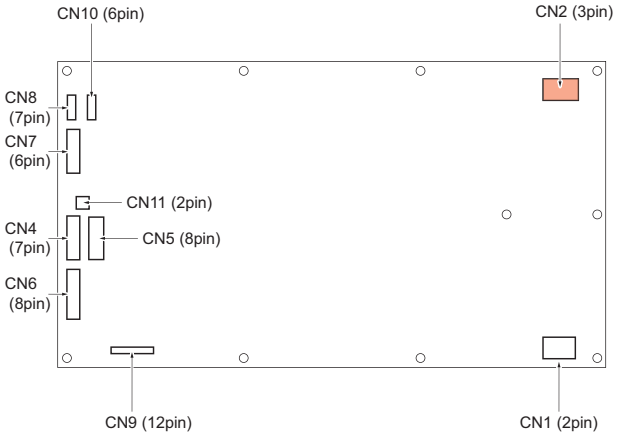


## WIRING DIAGRAM

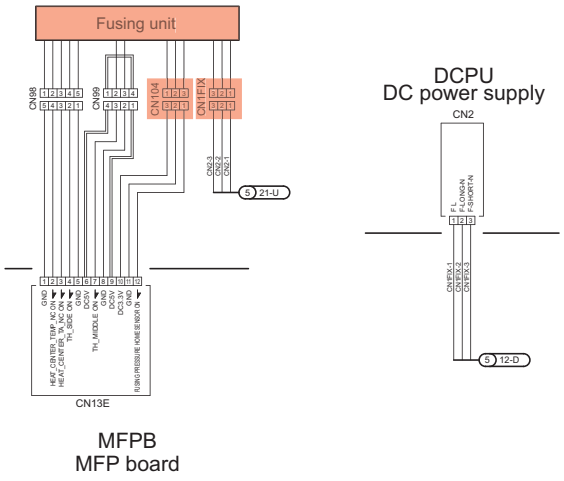

RELAY CONNECTOR LAYOUT DRAWING/1

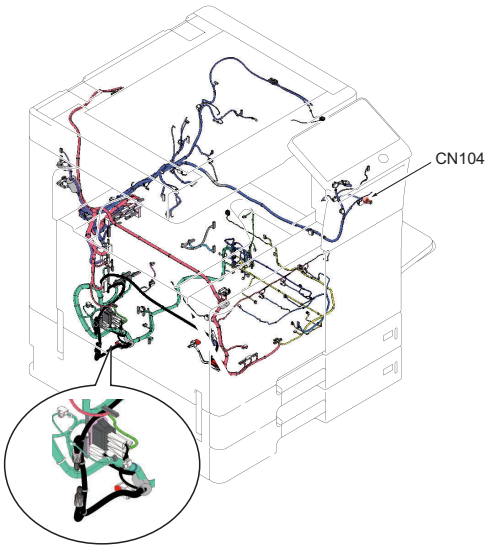


RELAY CONNECTOR LAYOUT DRAWING/2

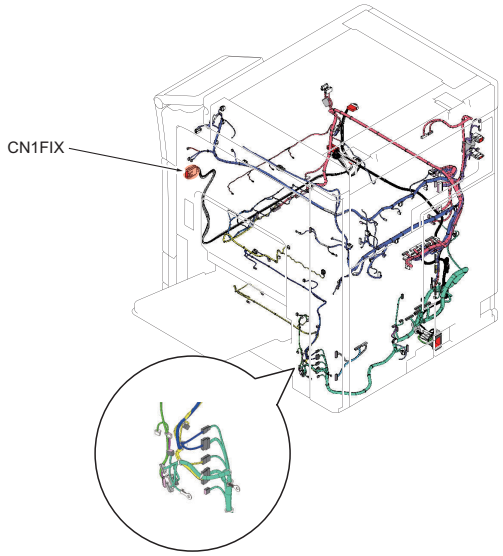

# 63. C3722, C3922

## PARTS LAYOUT DRAWING/1

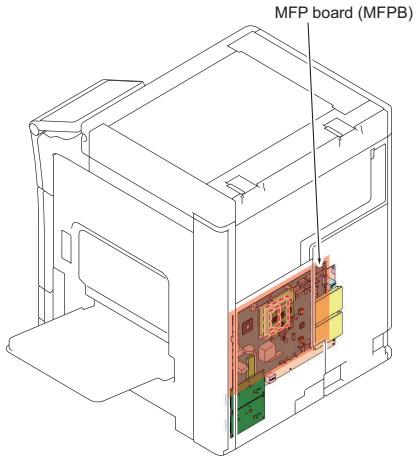


## PARTS LAYOUT DRAWING/2

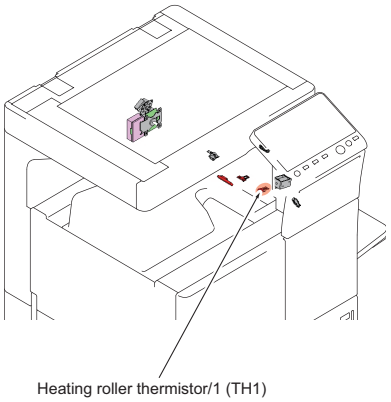


## BOARD CONNECTOR LAYOUT DRAWING (MFPB)

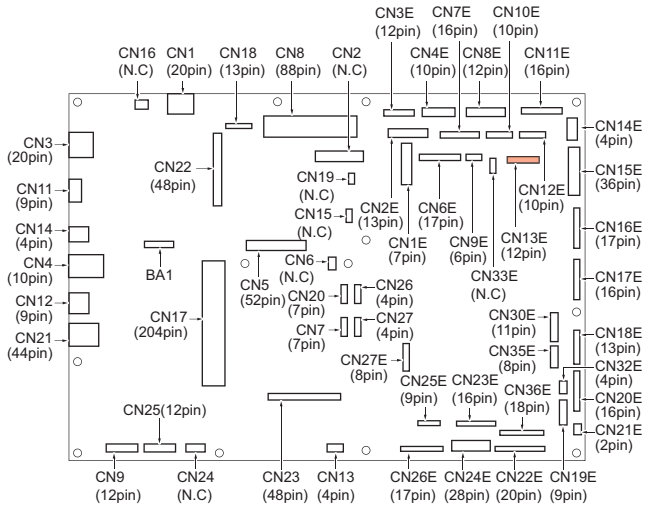


## WIRING DIAGRAM

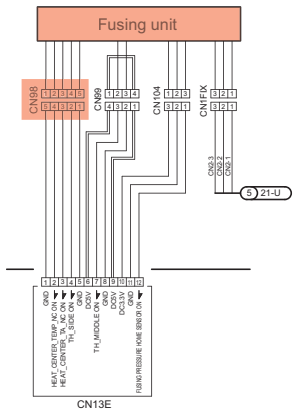


MFPB
MFP board

## RELAY CONNECTOR LAYOUT DRAWING

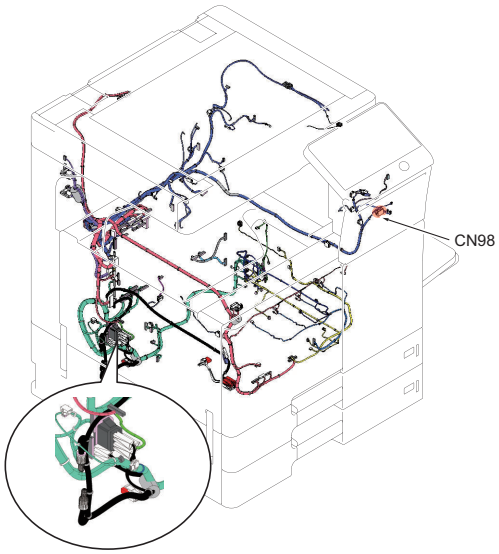

# 64. C3725, C3825, C3925, C392A

## PARTS LAYOUT DRAWING/1

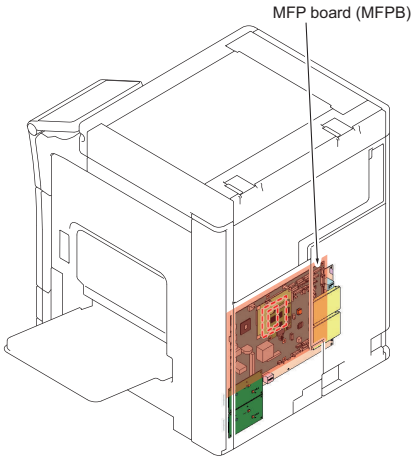


## PARTS LAYOUT DRAWING/2

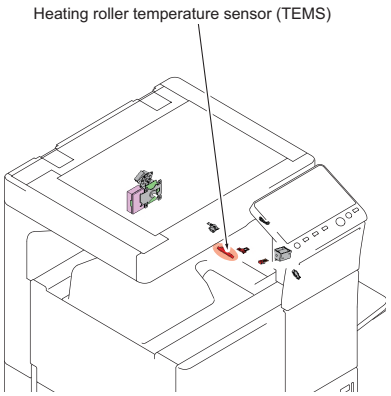


## BOARD CONNECTOR LAYOUT DRAWING (MFPB)

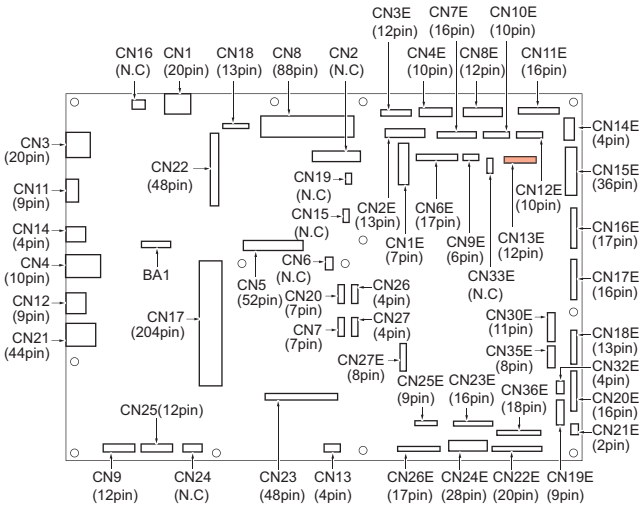


## WIRING DIAGRAM

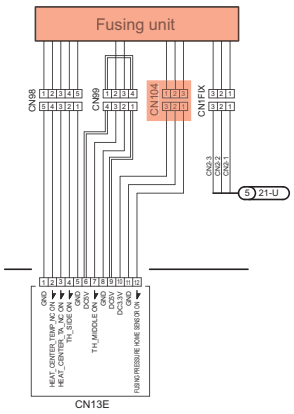


MFPB
MFP board

## RELAY CONNECTOR LAYOUT DRAWING

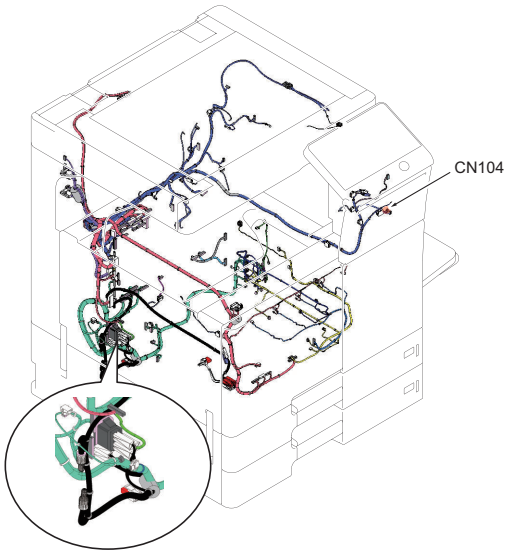

# 65. C3726, C3826, C3926

## PARTS LAYOUT DRAWING/1

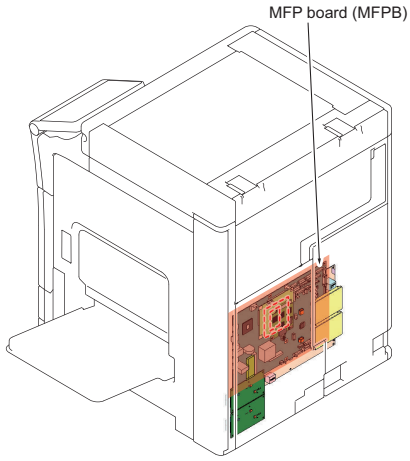


## PARTS LAYOUT DRAWING/2

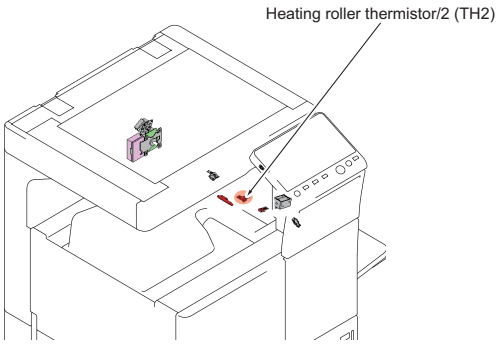


## BOARD CONNECTOR LAYOUT DRAWING (MFPB)

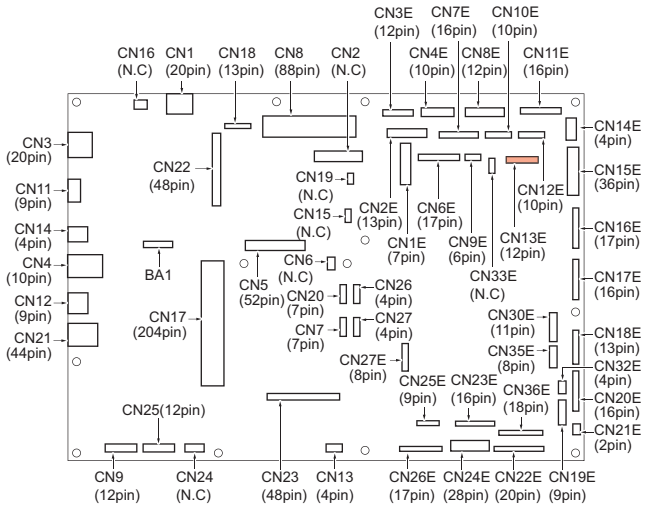


## WIRING DIAGRAM

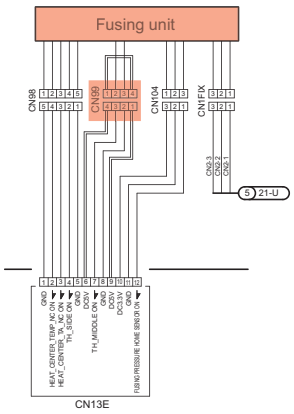


MFPB
MFP board

## RELAY CONNECTOR LAYOUT DRAWING

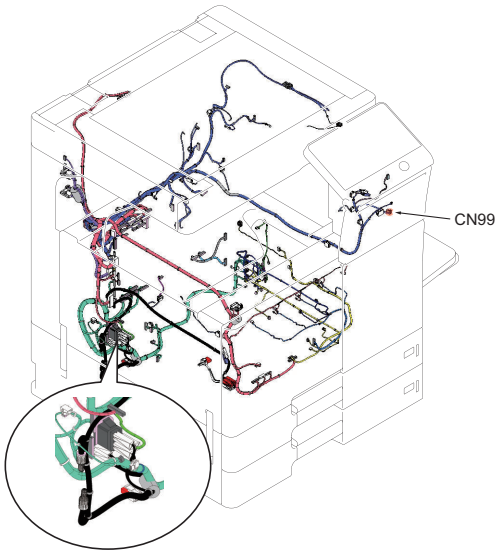

# 66. C3731

## PARTS LAYOUT DRAWING/1

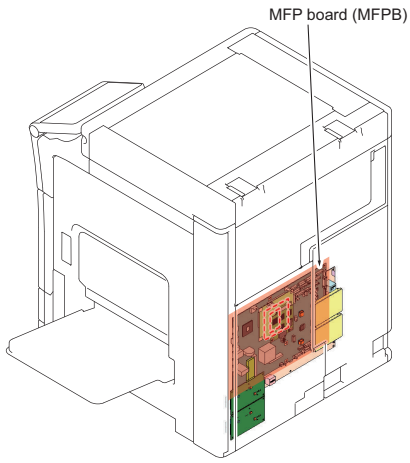


## PARTS LAYOUT DRAWING/2

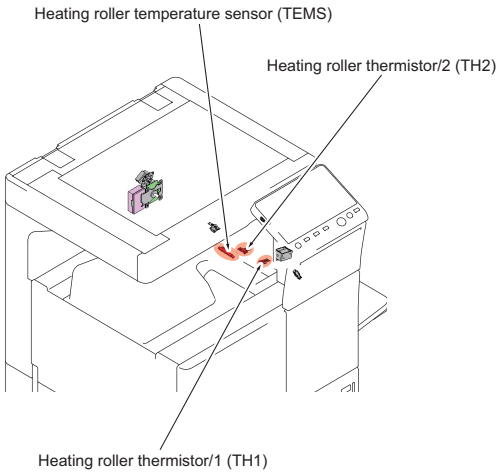


## BOARD CONNECTOR LAYOUT DRAWING (MFPB)

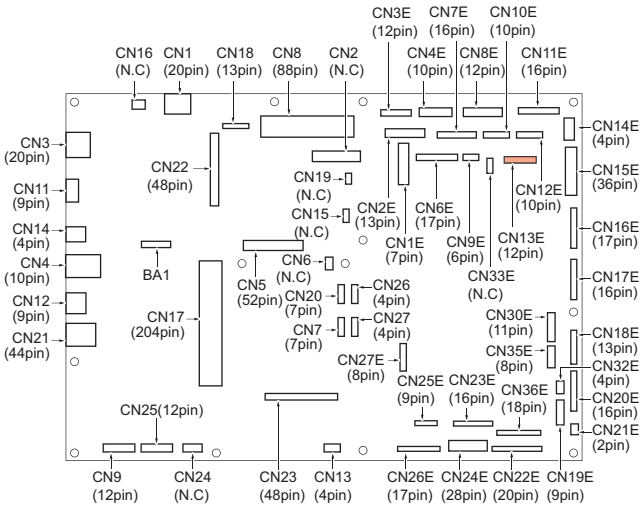


## WIRING DIAGRAM

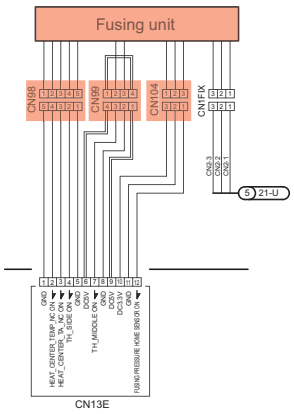


MFPB
MFP board

## RELAY CONNECTOR LAYOUT DRAWING

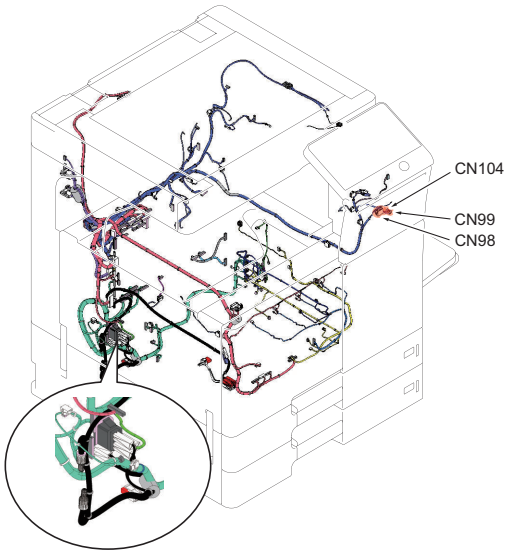

# 67. C392B

## PARTS LAYOUT DRAWING/1

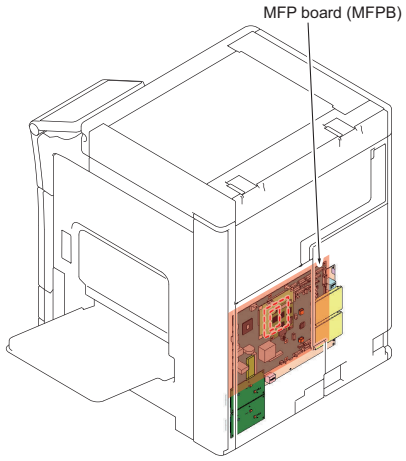


## PARTS LAYOUT DRAWING/2

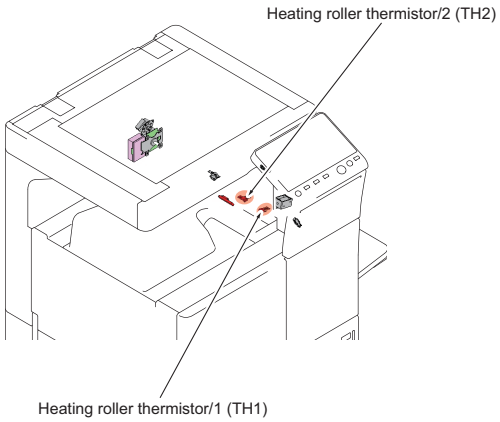


## BOARD CONNECTOR LAYOUT DRAWING (MFPB)

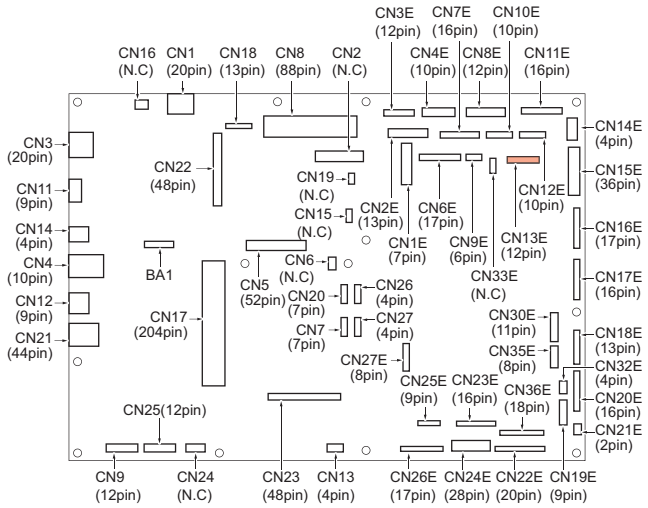


## WIRING DIAGRAM

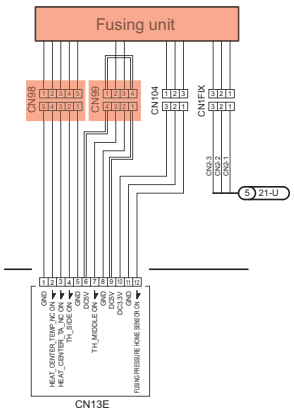


MFPB
MFP board

## RELAY CONNECTOR LAYOUT DRAWING

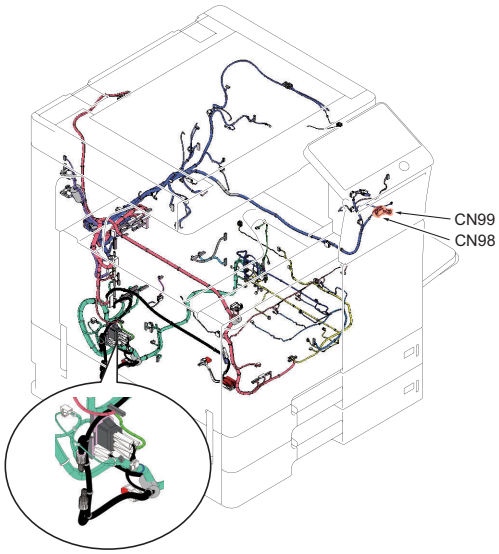

# 68. C4091 - C40A4, C5601, C5605, C5606, CA051 - CA053, CC151, CC152, CC15C, CC170 - CC186, CC191 - CC216, CD211 - CD261, CD401 - CD413, CD701 - CD703, CD705, CD706, CE001, CE003 - CE305, CEEE1, CEEE3

PARTS LAYOUT DRAWING

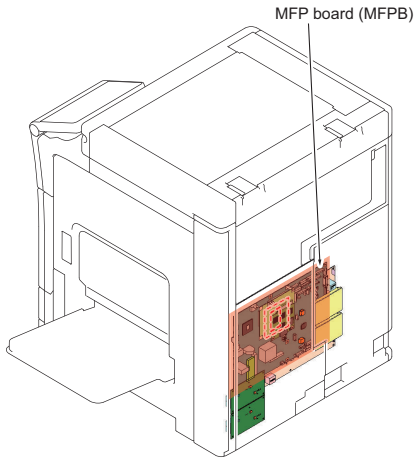

# 69. C4101

PARTS LAYOUT DRAWING/1

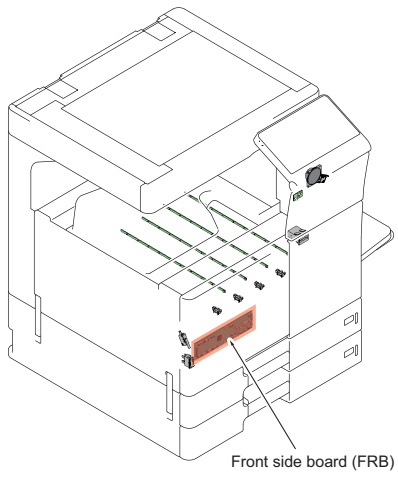


PARTS LAYOUT DRAWING/2

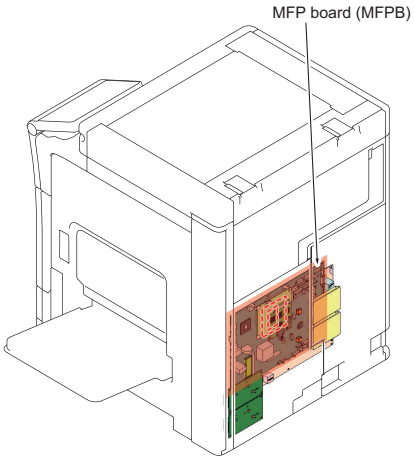


PARTS LAYOUT DRAWING/3

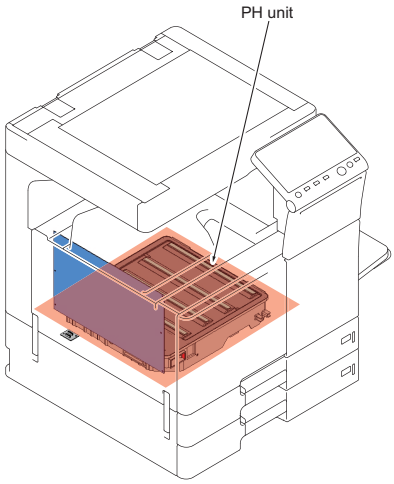


BOARD CONNECTOR LAYOUT DRAWING (FRB)

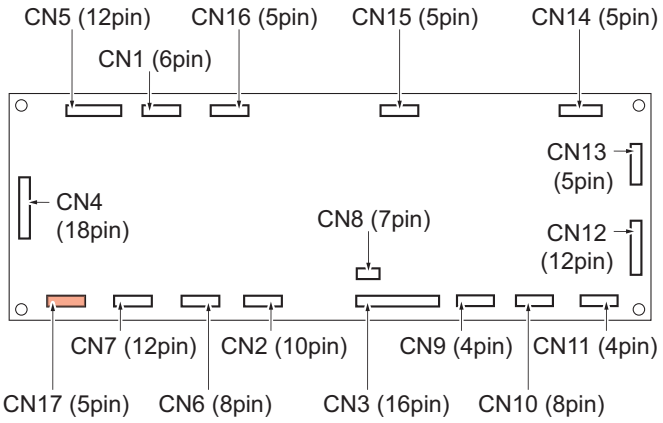


WIRING DIAGRAM

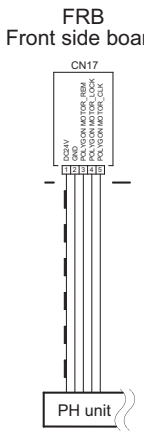

# 70. C4501

## PARTS LAYOUT DRAWING/1

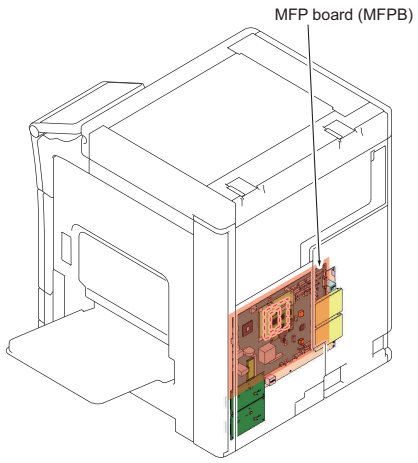


## PARTS LAYOUT DRAWING/2

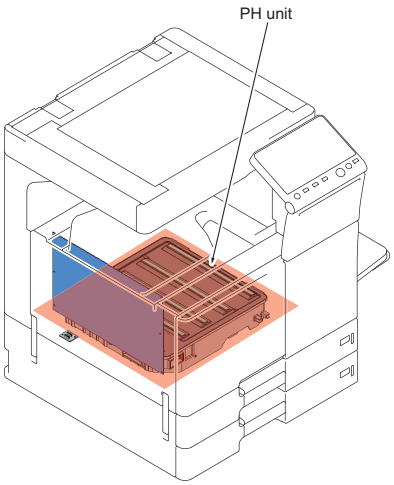


## BOARD CONNECTOR LAYOUT DRAWING (MFPB)

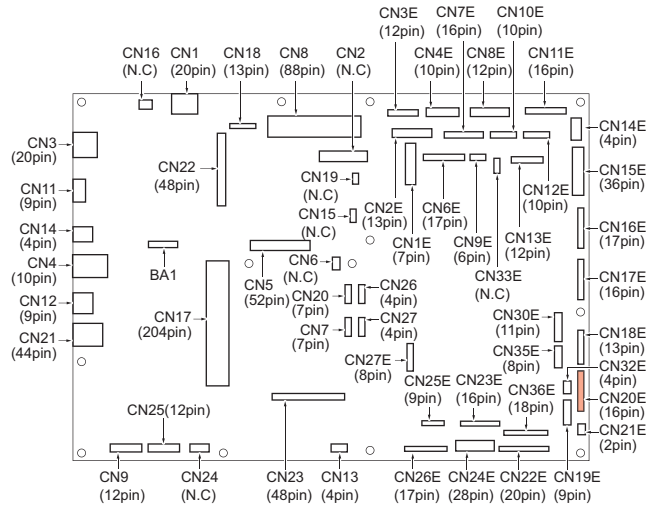


## WIRING DIAGRAM

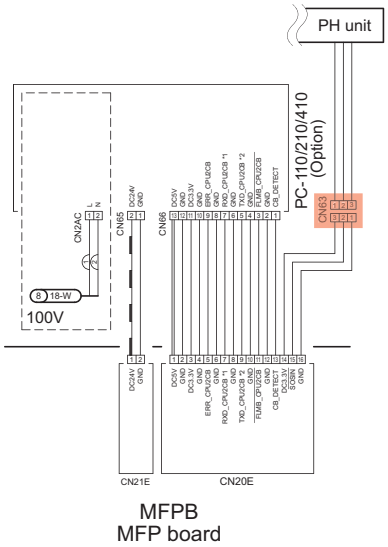


## RELAY CONNECTOR LAYOUT DRAWING

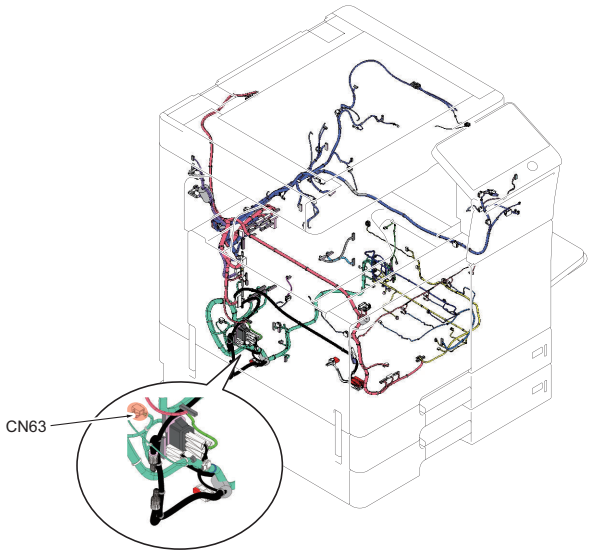

# 71. C5102, C5103

## PARTS LAYOUT DRAWING/1

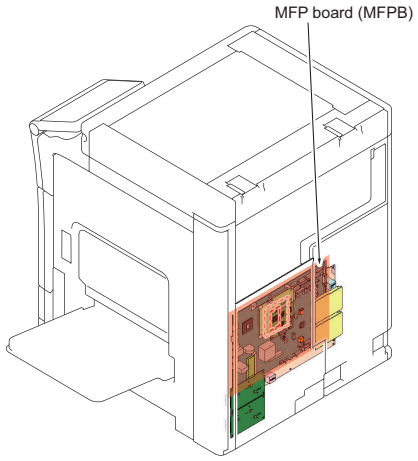


## PARTS LAYOUT DRAWING/2

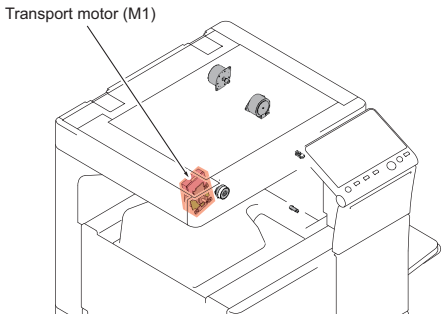


## BOARD CONNECTOR LAYOUT DRAWING (MFPB)

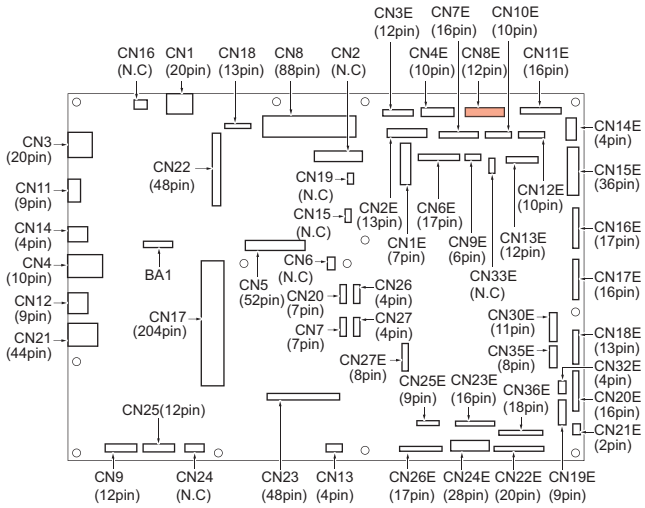


## WIRING DIAGRAM

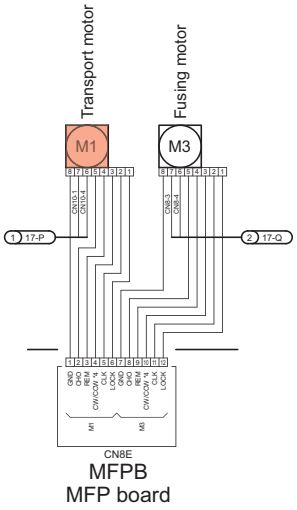

# 72. C5351

## PARTS LAYOUT DRAWING/1

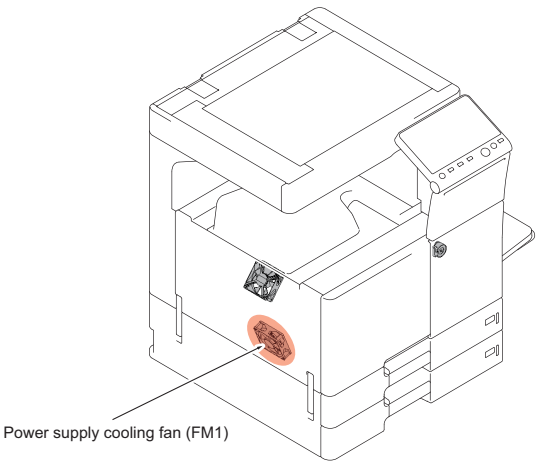


## PARTS LAYOUT DRAWING/2

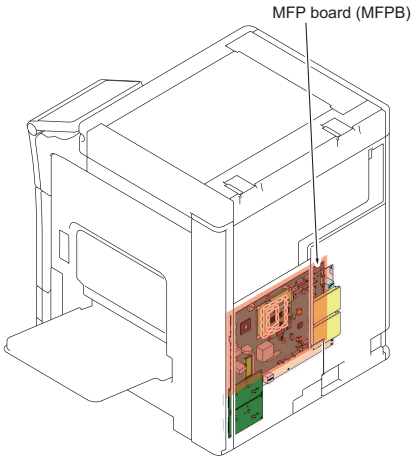


## BOARD CONNECTOR LAYOUT DRAWING (MFPB)

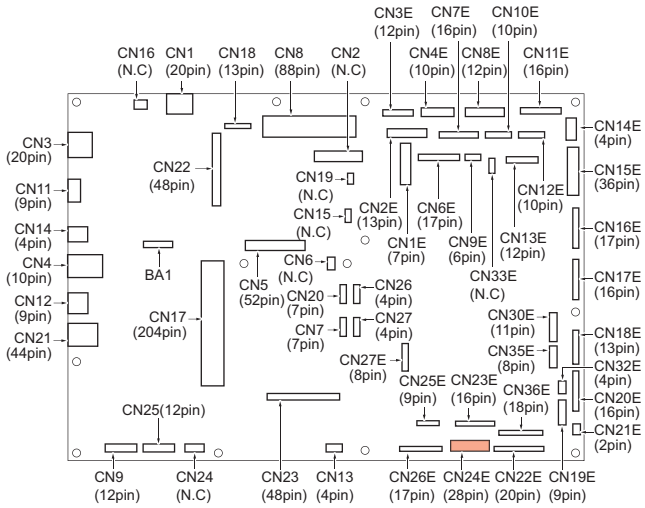


## WIRING DIAGRAM

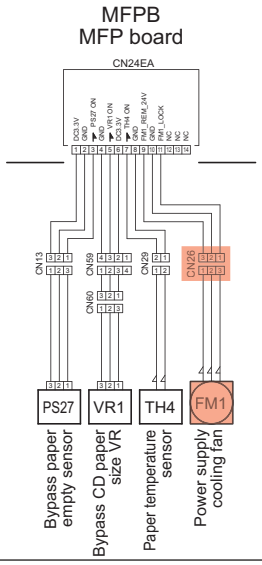


## RELAY CONNECTOR LAYOUT DRAWING

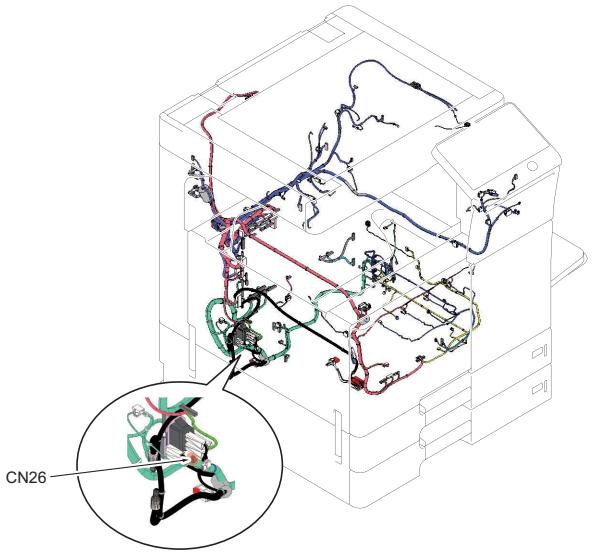

# 73. C5355

## PARTS LAYOUT DRAWING/1

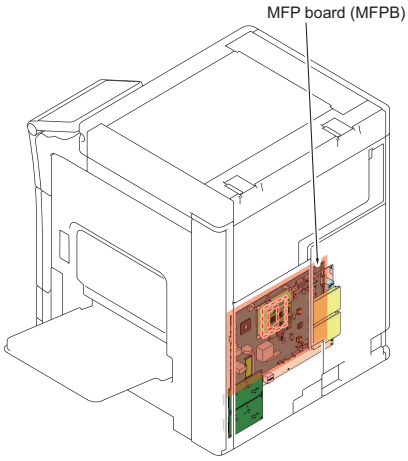


## PARTS LAYOUT DRAWING/2

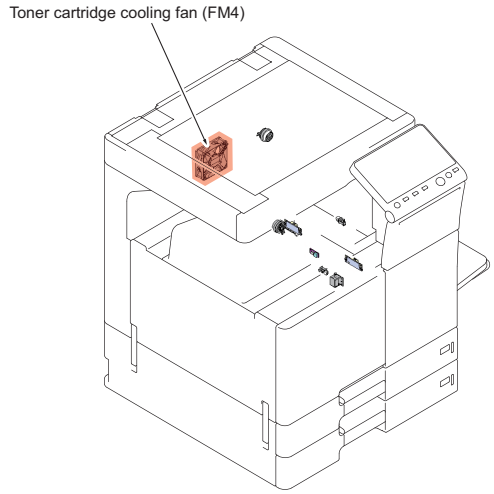


## BOARD CONNECTOR LAYOUT DRAWING (MFPB)

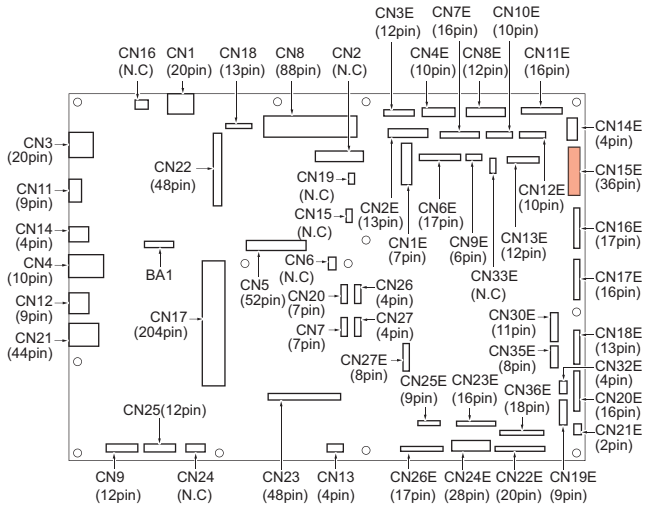


## WIRING DIAGRAM

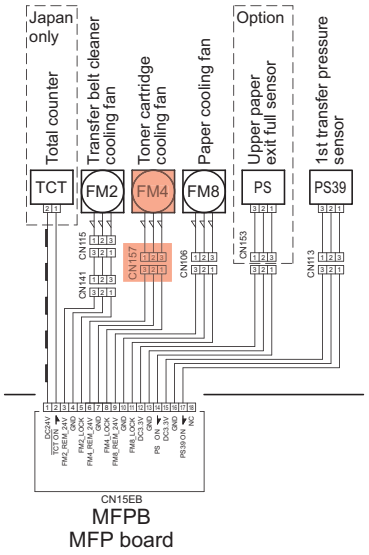


## RELAY CONNECTOR LAYOUT DRAWING

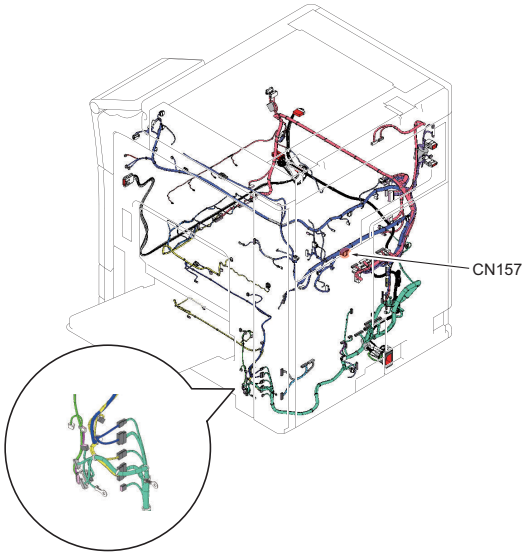

# 74. C5360

## PARTS LAYOUT DRAWING/1

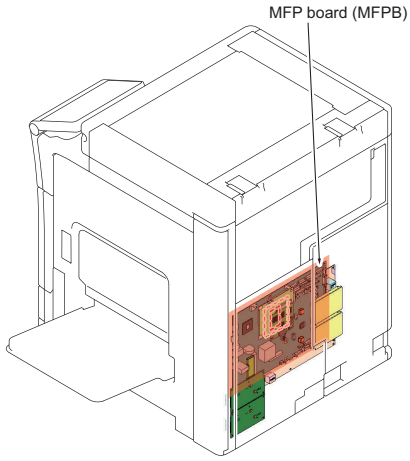


## PARTS LAYOUT DRAWING/2

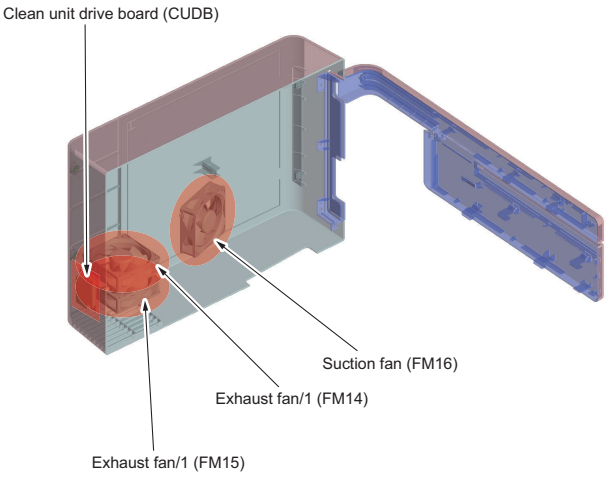


## BOARD CONNECTOR LAYOUT DRAWING (MFPB)

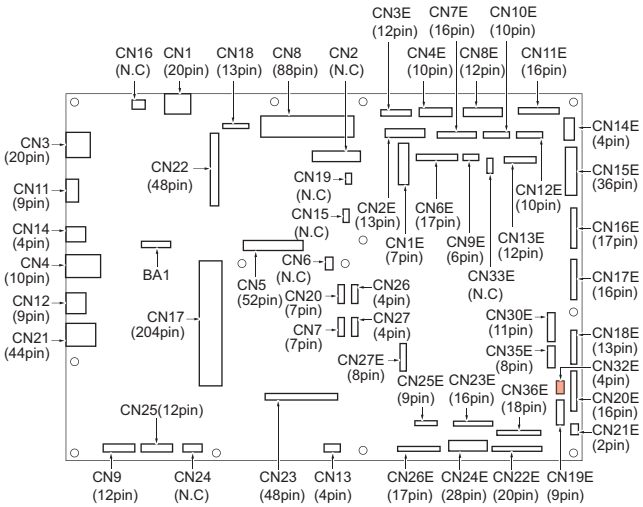


## BOARD CONNECTOR LAYOUT DRAWING (CUDB)

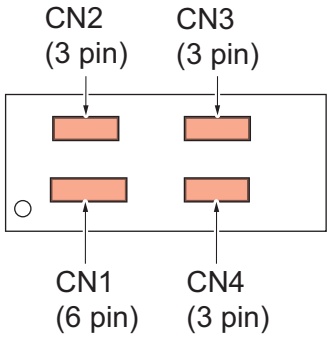


## WIRING DIAGRAM

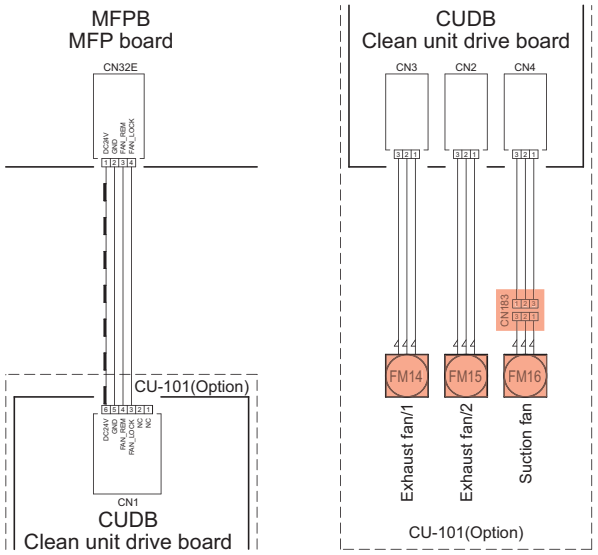

# 75. C5370

## PARTS LAYOUT DRAWING/1

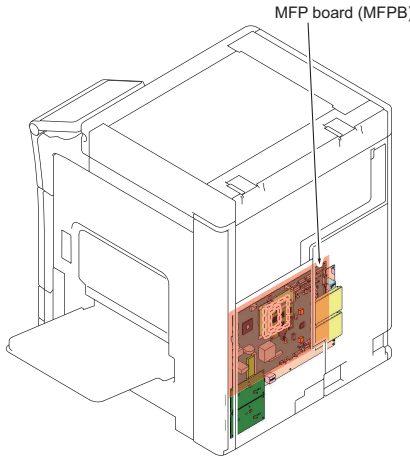


## PARTS LAYOUT DRAWING/2

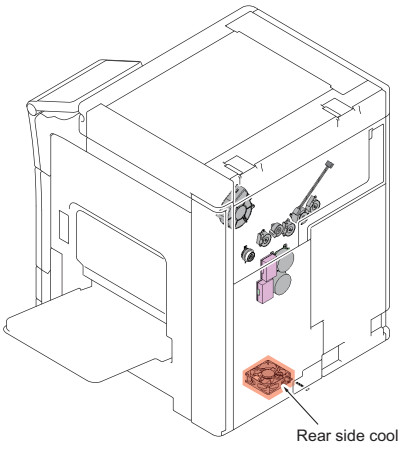


## BOARD CONNECTOR LAYOUT DRAWING (MFPB)

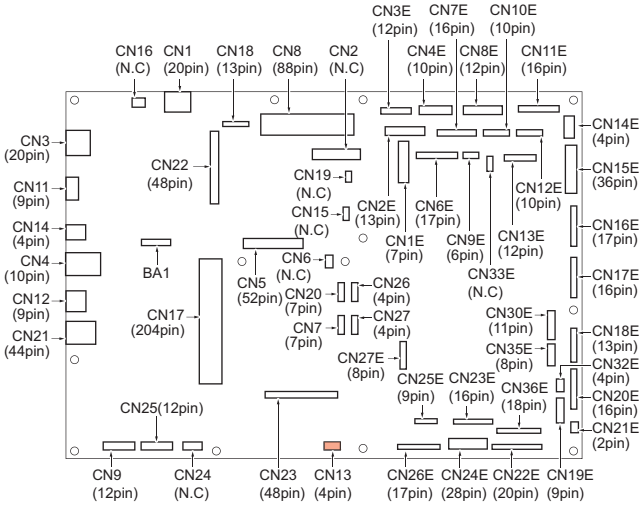


## WIRING DIAGRAM

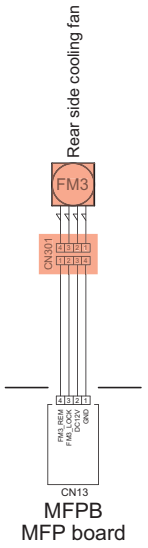


## RELAY CONNECTOR LAYOUT DRAWING

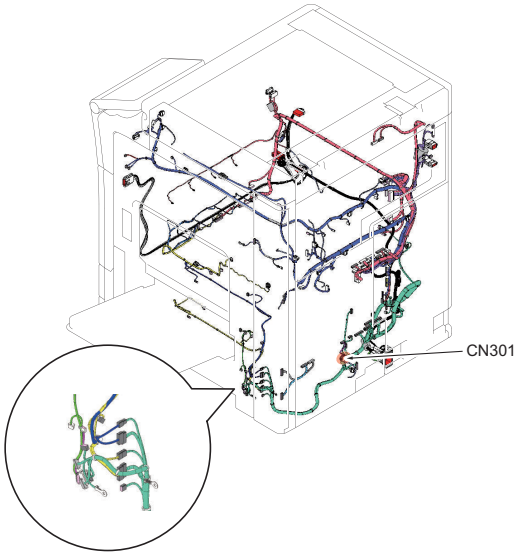

# 76. C5501

## PARTS LAYOUT DRAWING/1

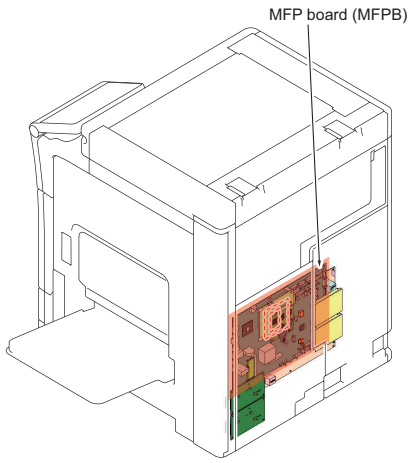


## PARTS LAYOUT DRAWING/2

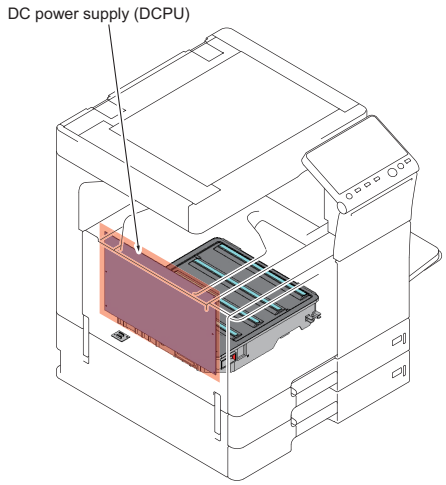


## BOARD CONNECTOR LAYOUT DRAWING (MFPB)

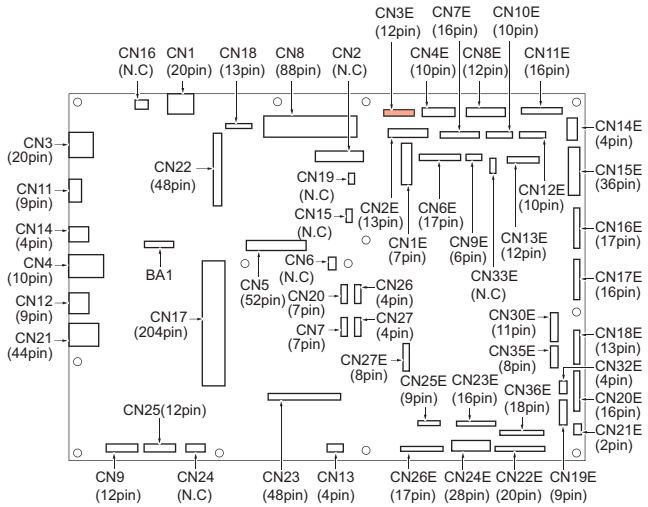


## BOARD CONNECTOR LAYOUT DRAWING (DCPU)

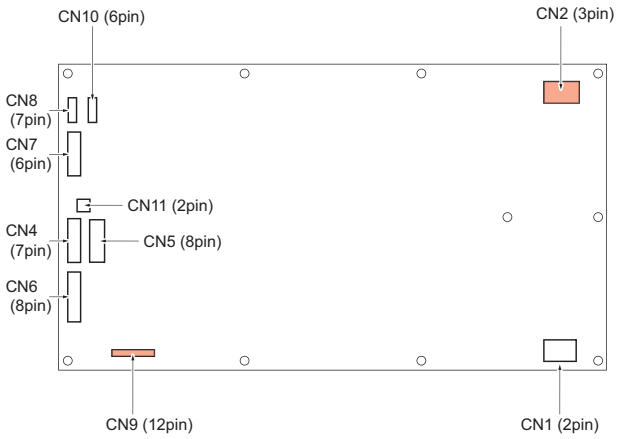


## WIRING DIAGRAM

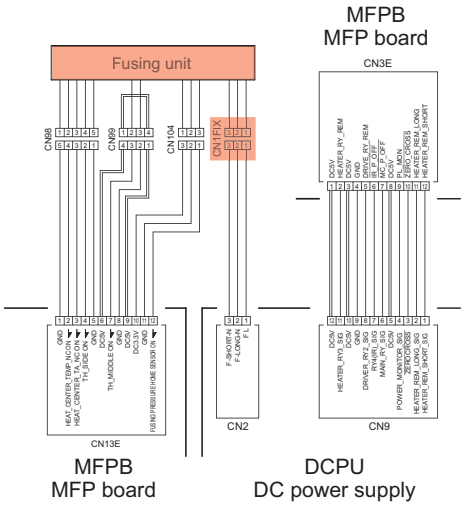


## RELAY CONNECTOR LAYOUT DRAWING/2

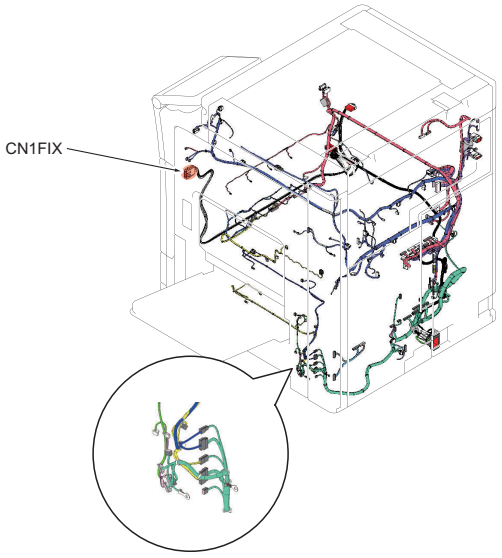

# 77. C5603, C5610, C5611

## PARTS LAYOUT DRAWING/1

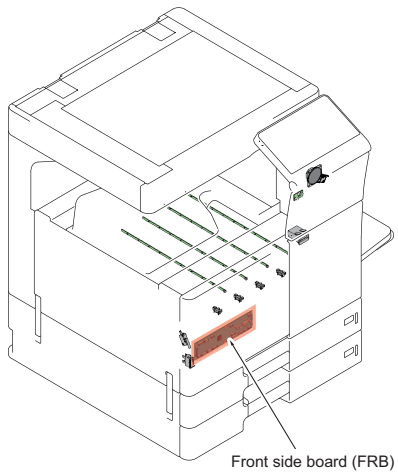


## PARTS LAYOUT DRAWING/2

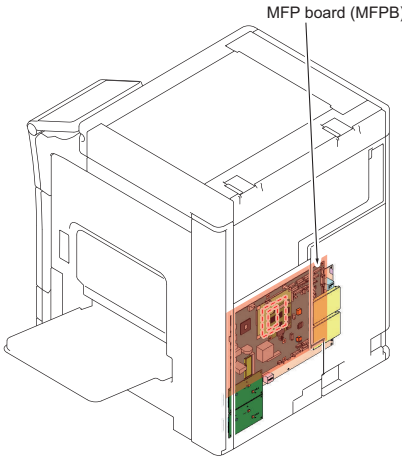


## PARTS LAYOUT DRAWING/3

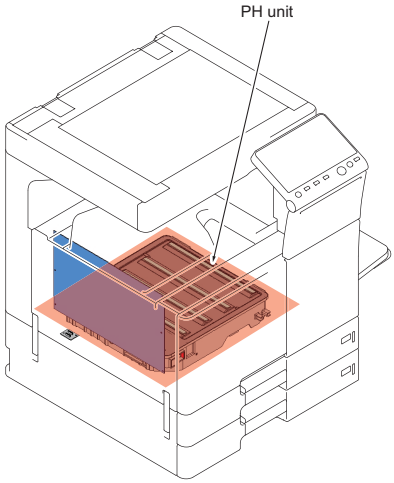


## BOARD CONNECTOR LAYOUT DRAWING (MFPB)

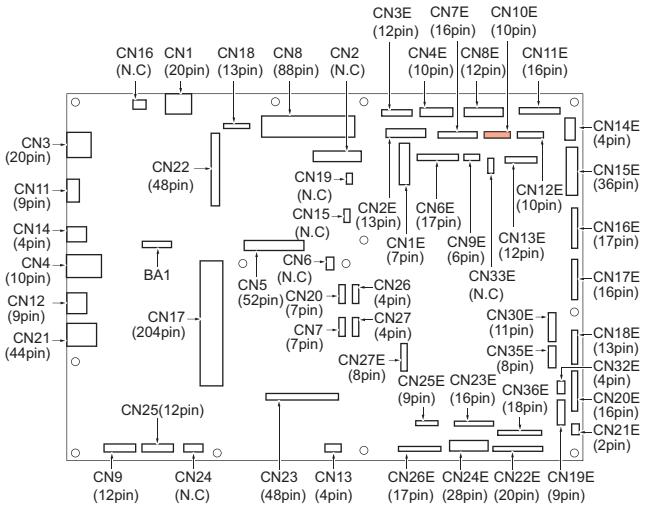


## BOARD CONNECTOR LAYOUT DRAWING (FRB)

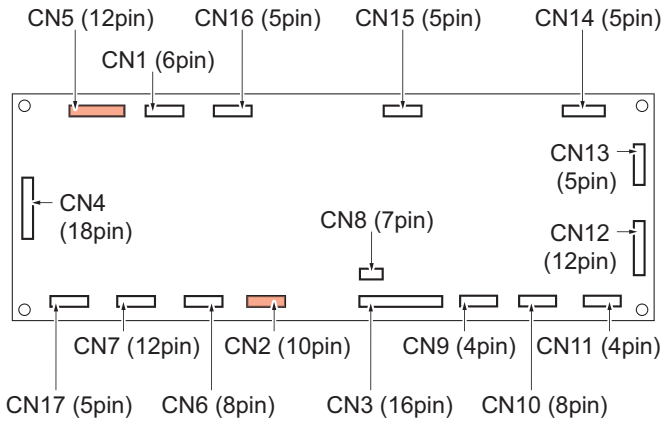


## WIRING DIAGRAM

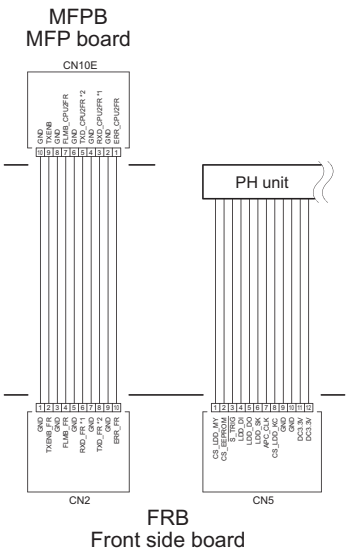

# 78. C5604

PARTS LAYOUT DRAWING/1

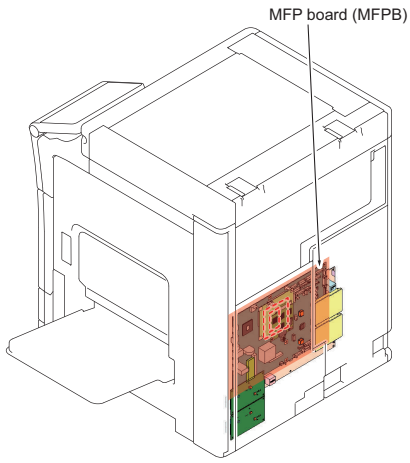


PARTS LAYOUT DRAWING/2

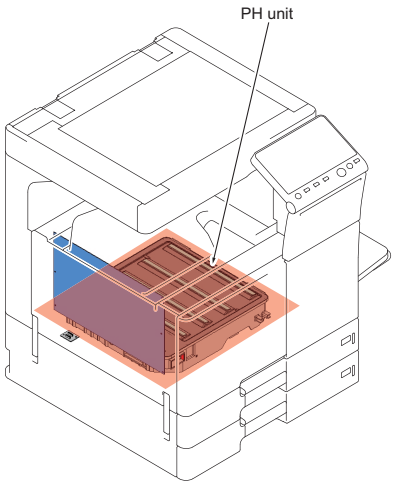

# 79. C6001

## PARTS LAYOUT DRAWING/1

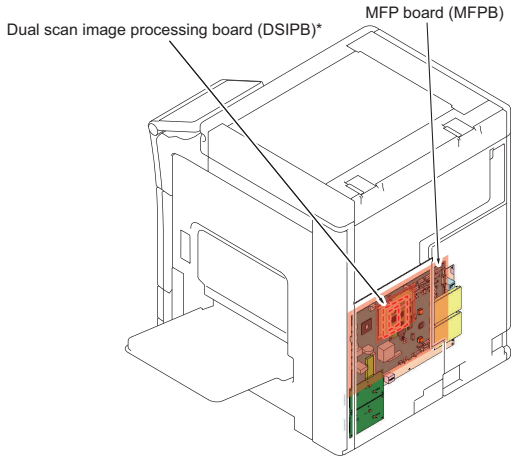


* : Option

## PARTS LAYOUT DRAWING/2

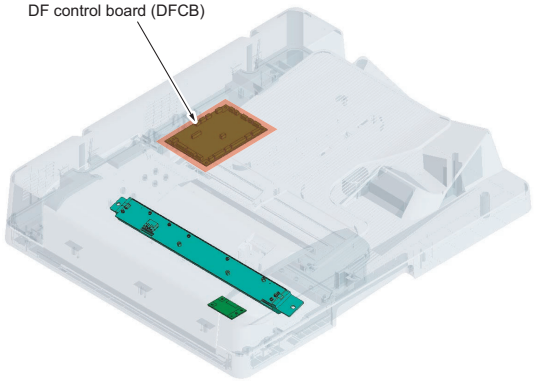


## BOARD CONNECTOR LAYOUT DRAWING (MFPB)

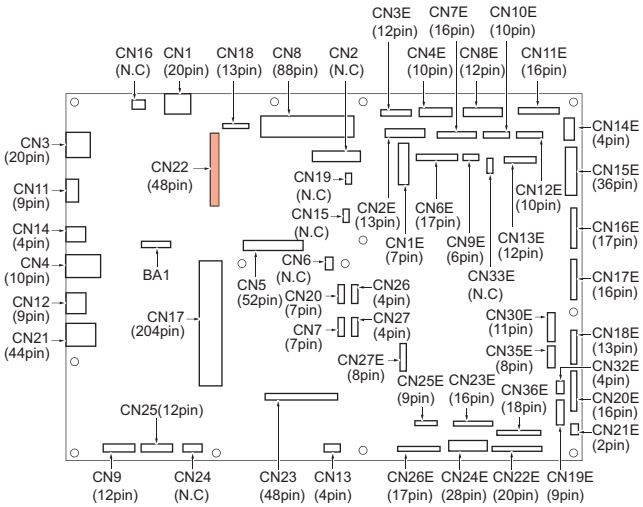


## BOARD CONNECTOR LAYOUT DRAWING (DSIPB)

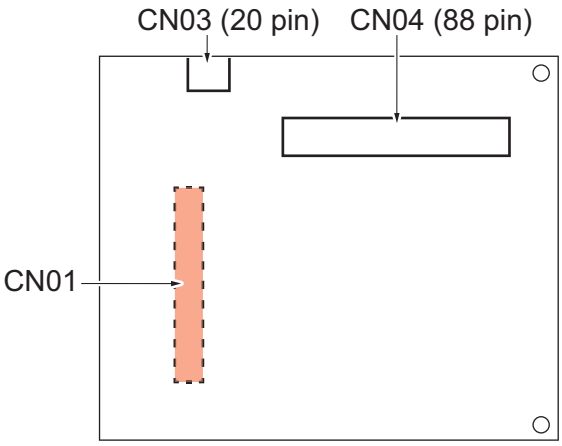


## WIRING DIAGRAM

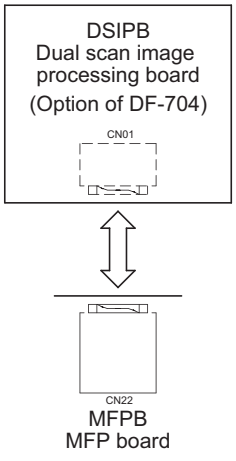

# 80. C6002

PARTS LAYOUT DRAWING/1

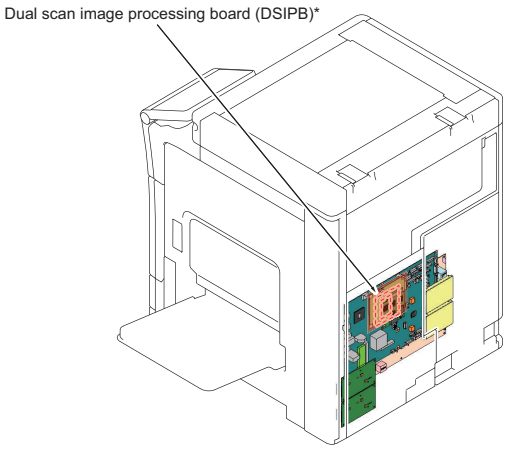


* : Option

PARTS LAYOUT DRAWING/2 [DF-704]

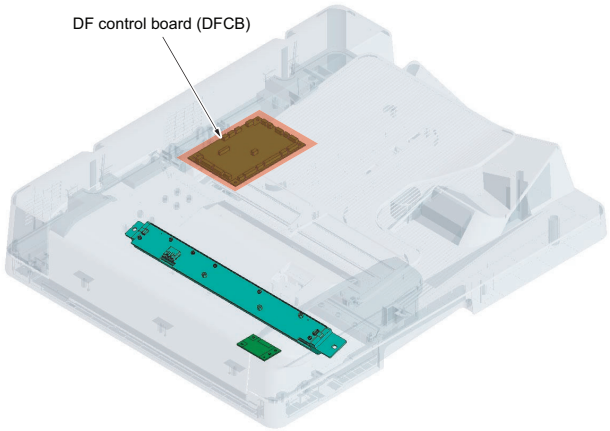


PARTS LAYOUT DRAWING/3 [DF-629]

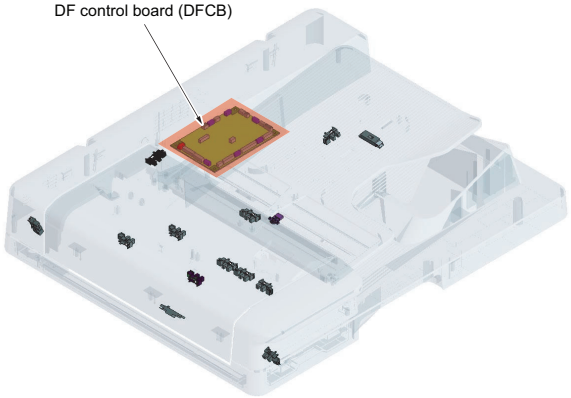

# 81. C6102, C6103

## PARTS LAYOUT DRAWING/1

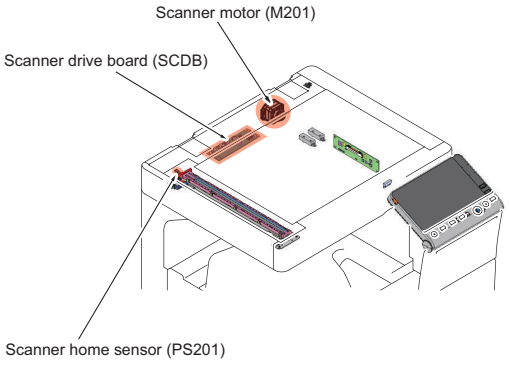


## PARTS LAYOUT DRAWING/2

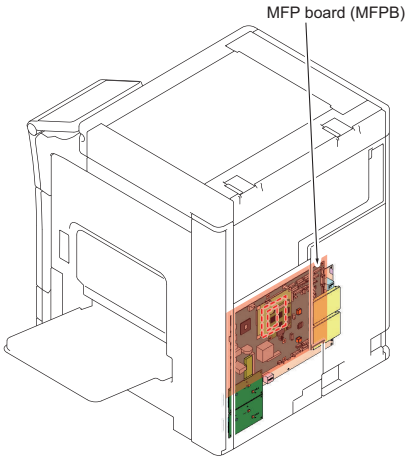


## BOARD CONNECTOR LAYOUT DRAWING (MFPB)

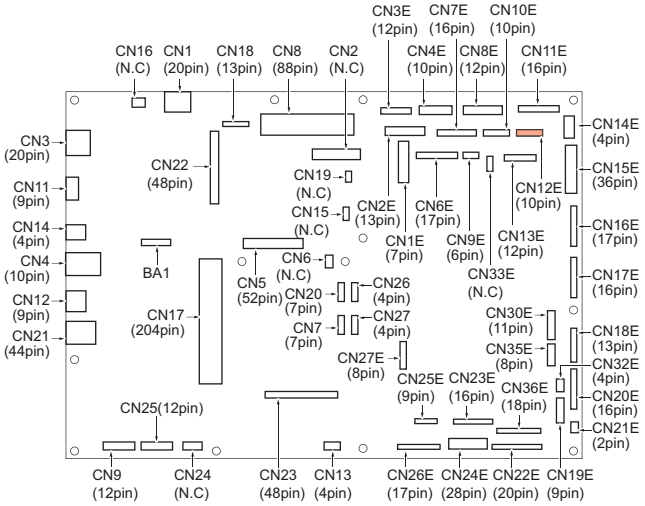


## BOARD CONNECTOR LAYOUT DRAWING (SCDB)

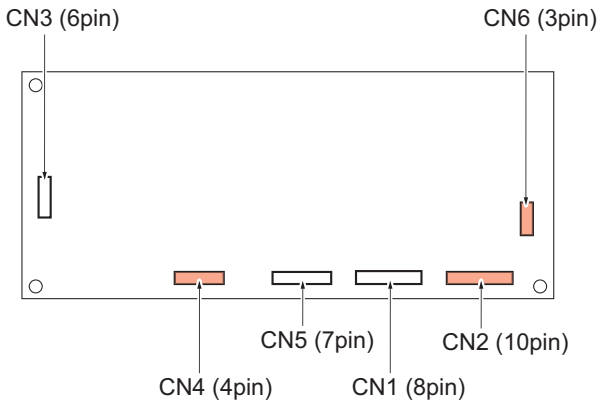


## WIRING DIAGRAM

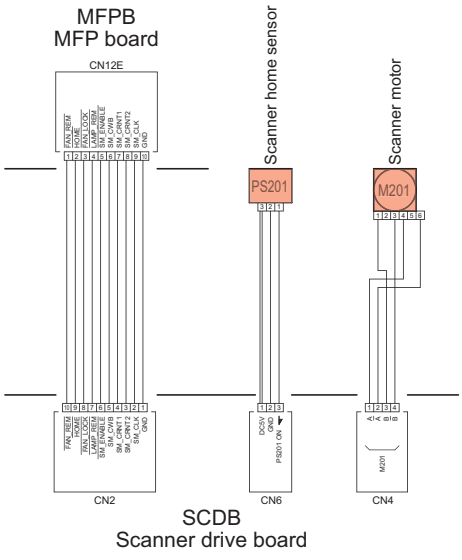

# 82. C6104, C6105

PARTS LAYOUT DRAWING/1

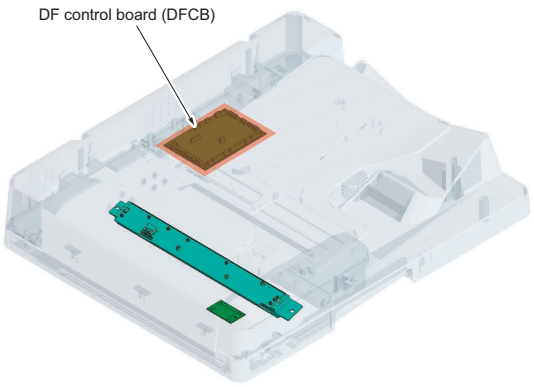


PARTS LAYOUT DRAWING/2

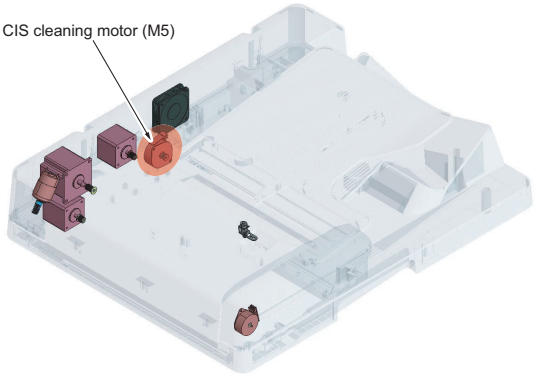


PARTS LAYOUT DRAWING/3

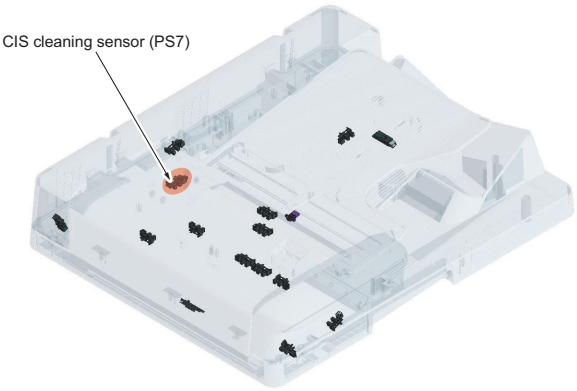


BOARD CONNECTOR LAYOUT DRAWING (DFCB)

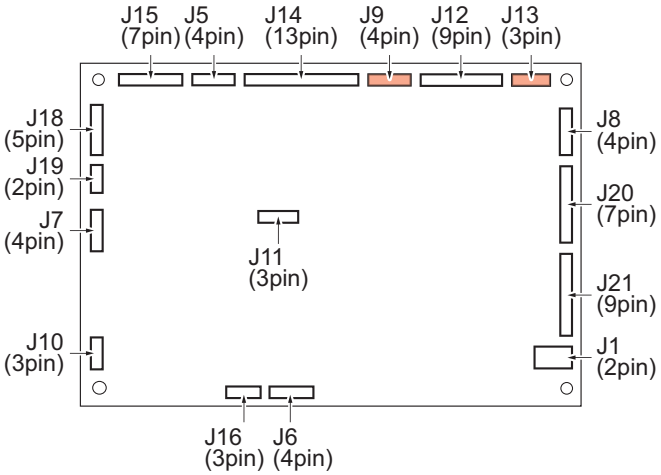


WIRING DIAGRAM

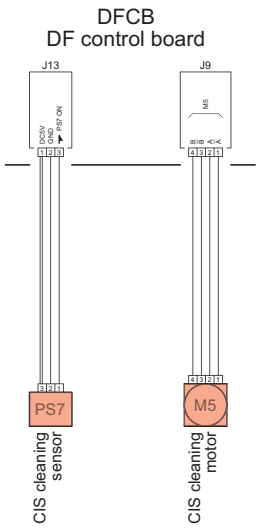

# 83. C6704, C6751, CDF50, CDF70, CDFA0

PARTS LAYOUT DRAWING/1

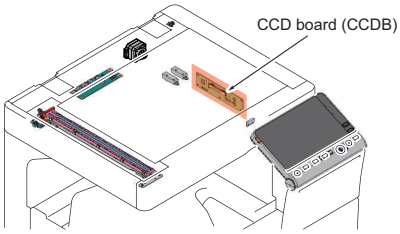


PARTS LAYOUT DRAWING/2

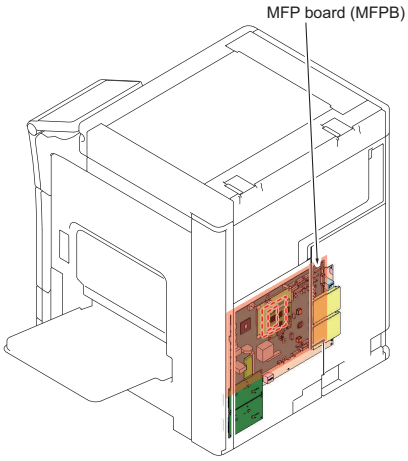


BOARD CONNECTOR LAYOUT DRAWING (MFPB)

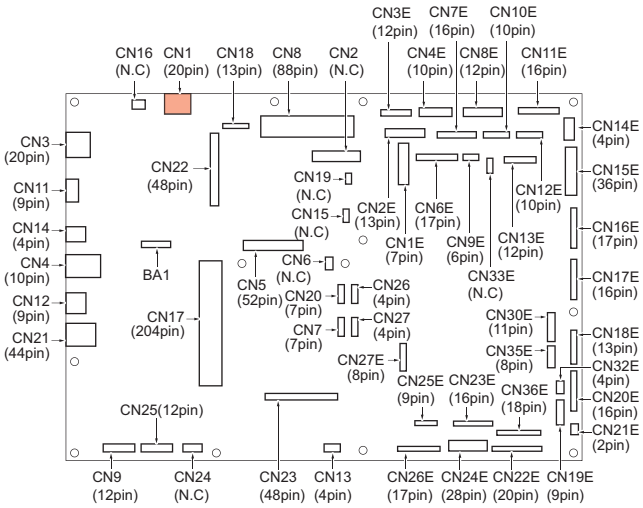


WIRING DIAGRAM

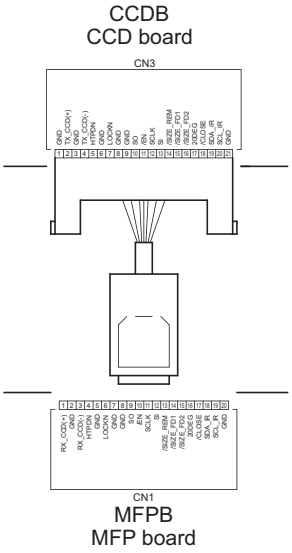

# 84. C6752

PARTS LAYOUT DRAWING/1

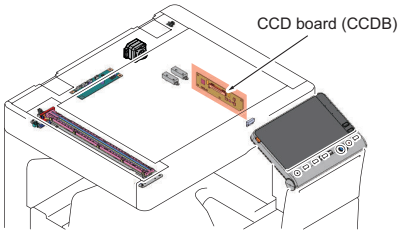


PARTS LAYOUT DRAWING/2

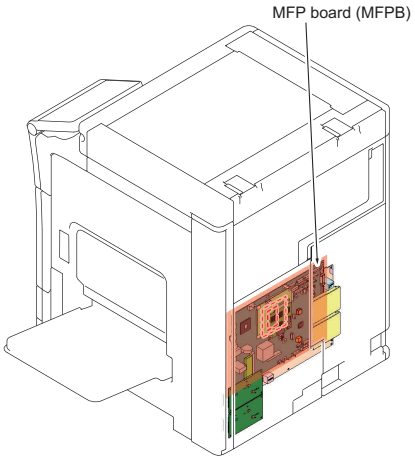

# 85. C6753

## PARTS LAYOUT DRAWING/1

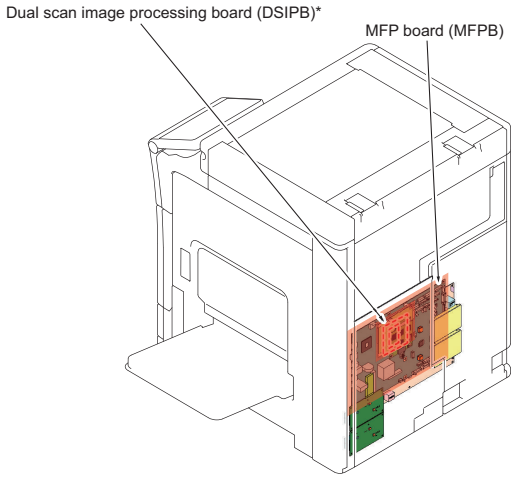


* : Option

## PARTS LAYOUT DRAWING/2

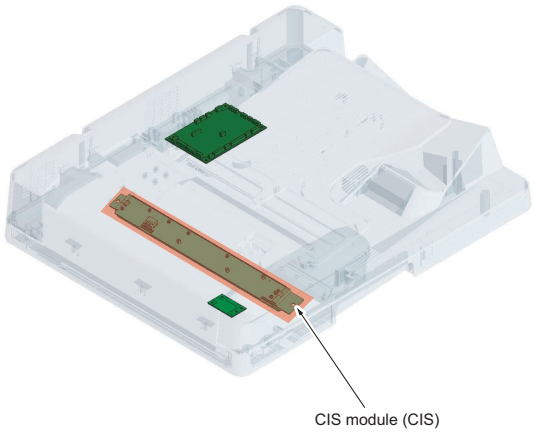


## BOARD CONNECTOR LAYOUT DRAWING (MFPB)

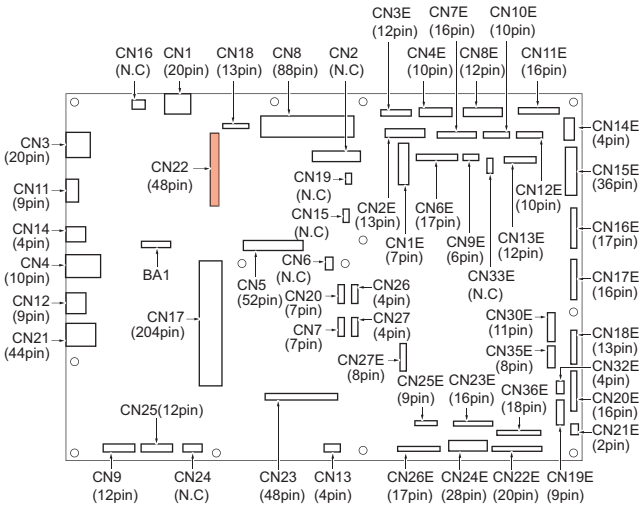


## BOARD CONNECTOR LAYOUT DRAWING (DSIPB)

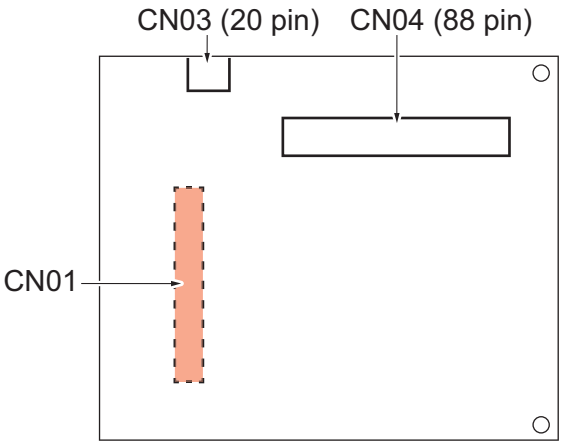


## WIRING DIAGRAM

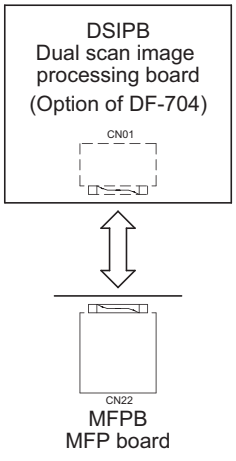

# 86. C6754, C6755

PARTS LAYOUT DRAWING/1

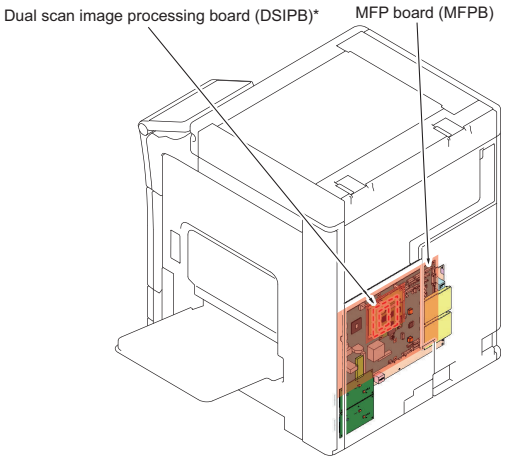


* : Option

PARTS LAYOUT DRAWING/2

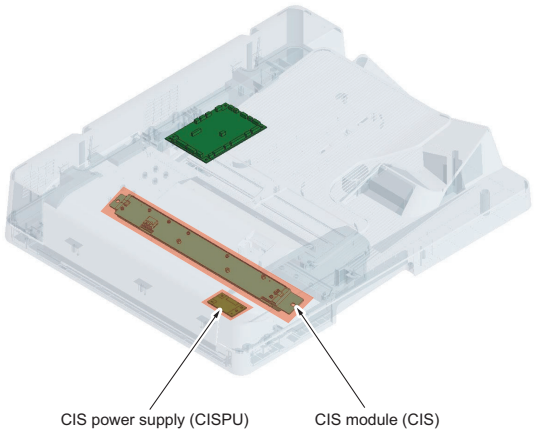


BOARD CONNECTOR LAYOUT DRAWING (CISPU)

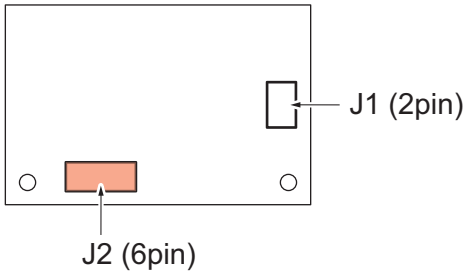


WIRING DIAGRAM

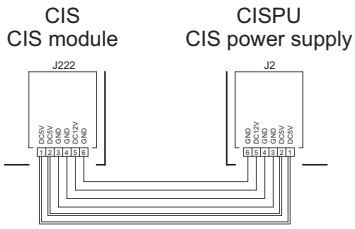

# 87. C6756

## PARTS LAYOUT DRAWING/1

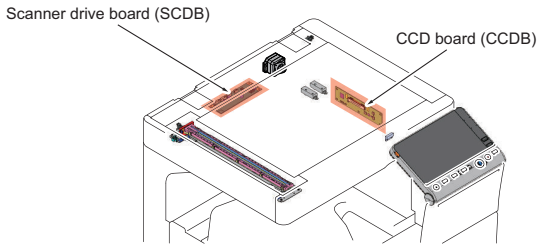


## PARTS LAYOUT DRAWING/2

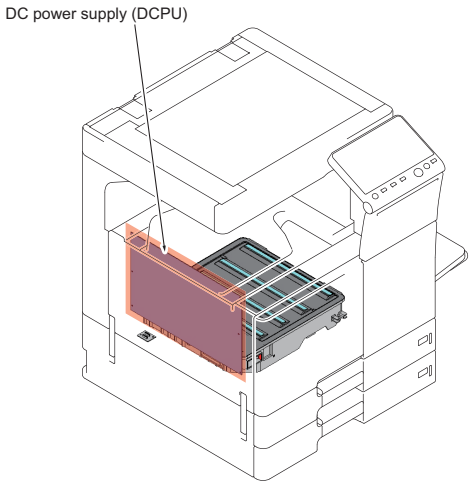


## BOARD CONNECTOR LAYOUT DRAWING (DCPU)

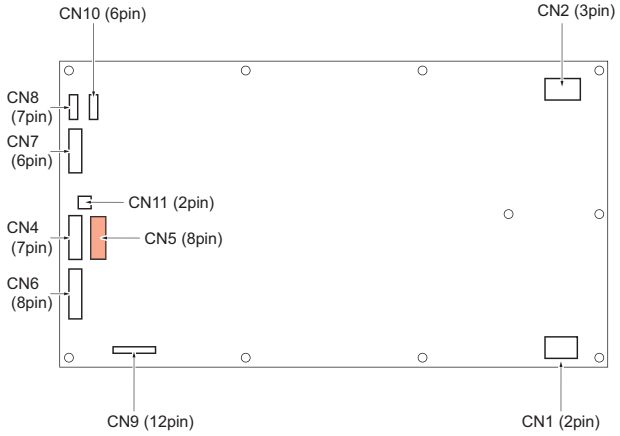


## BOARD CONNECTOR LAYOUT DRAWING (SCDB)

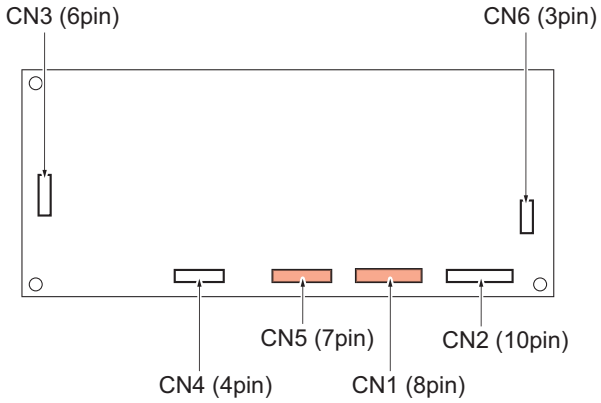


## WIRING DIAGRAM

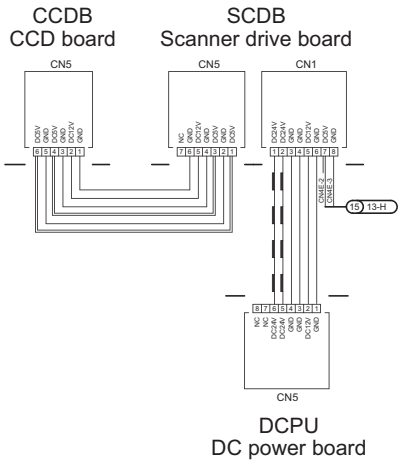

# 88. C6901, C6902, C6903

PARTS LAYOUT DRAWING

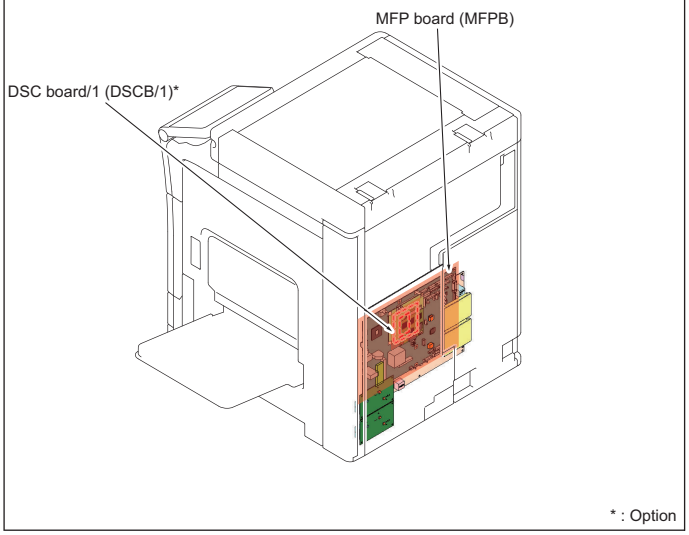

# 89. C6911, C6912, C6913

PARTS LAYOUT DRAWING

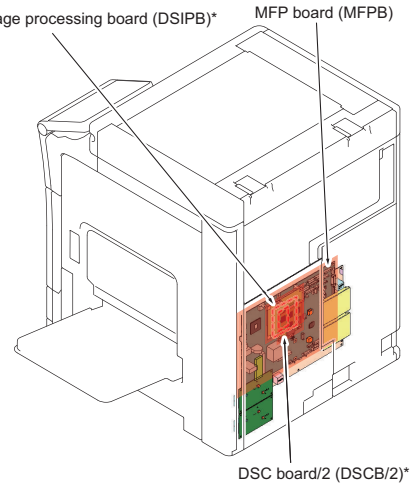


* : Option

# 90. C6F01, C6F02, C6F03, C6F04, C6F05, C6F07, C6F08, C6F09, C6F0A, C6FFDC, C6FDD

PARTS LAYOUT DRAWING/1

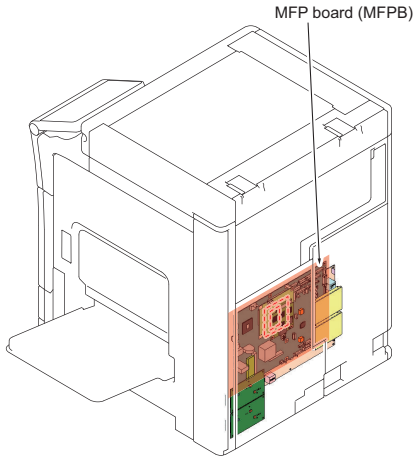


PARTS LAYOUT DRAWING/2 [DF-704]

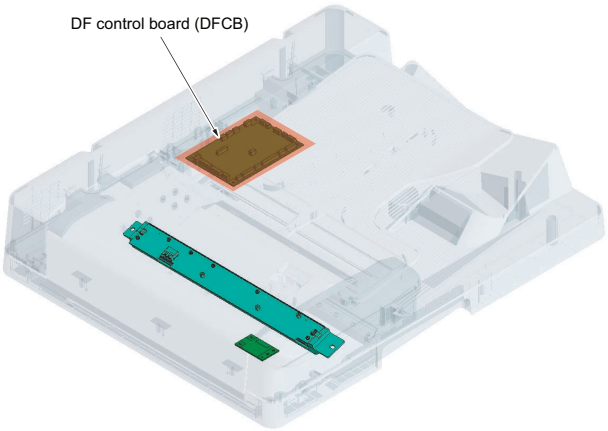


PARTS LAYOUT DRAWING/3 [DF-629]

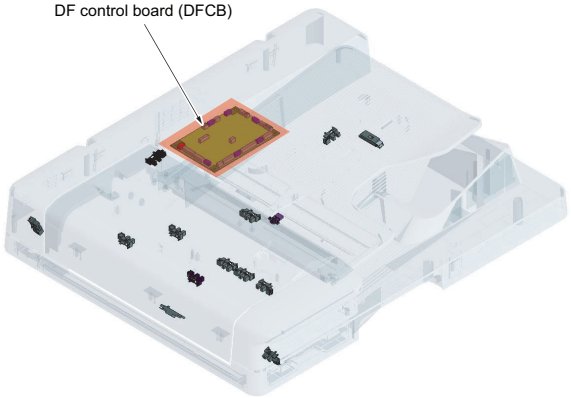

# 91. C8101

## 91.1 DF-629

PARTS LAYOUT DRAWING/1

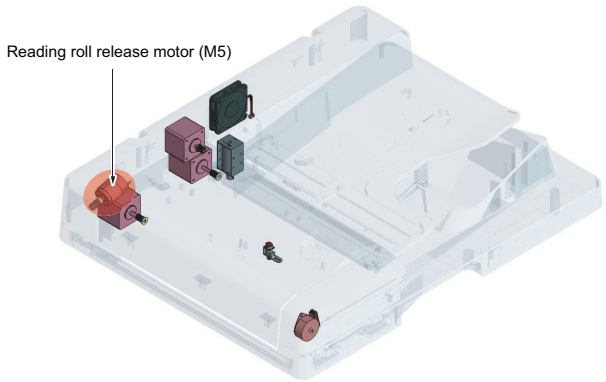


PARTS LAYOUT DRAWING/2

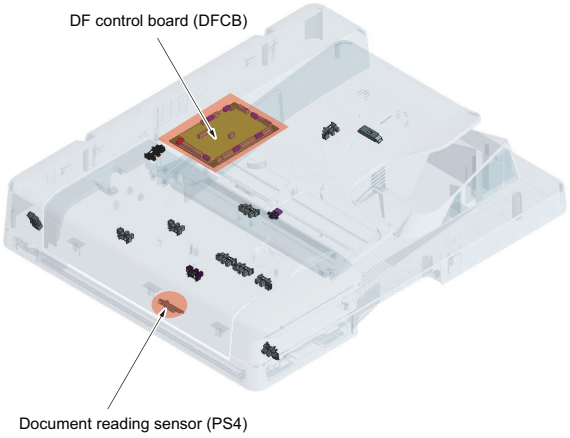


BOARD CONNECTOR LAYOUT DRAWING (DFCB)

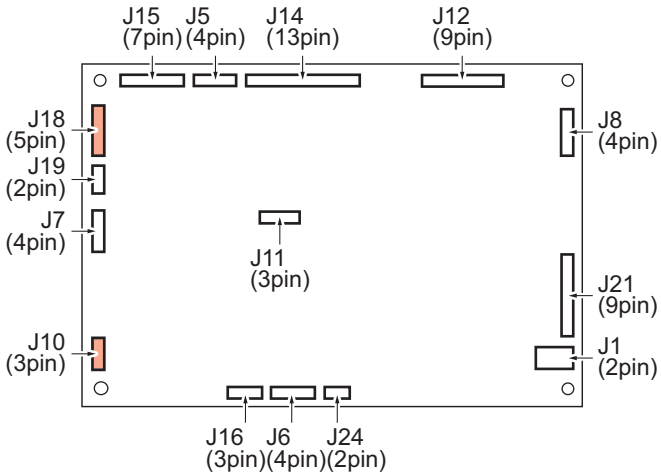


WIRING DIAGRAM

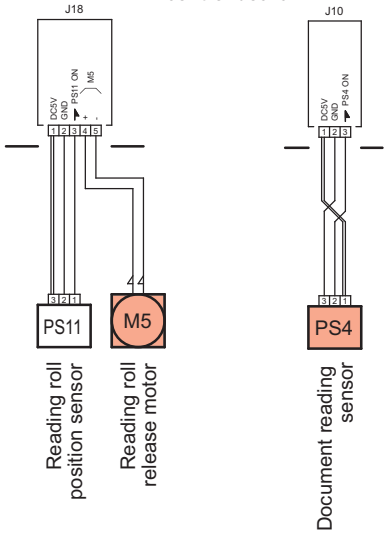

## 91.2 DF-704

PARTS LAYOUT DRAWING/1

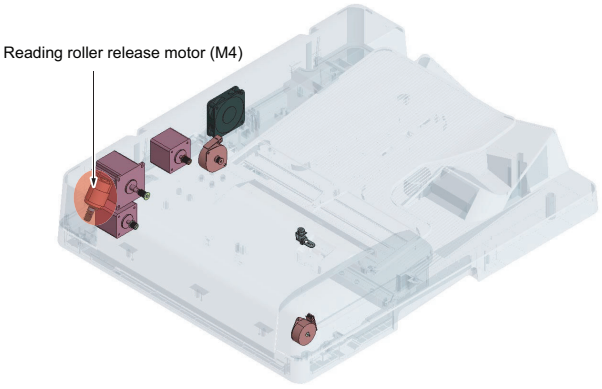


PARTS LAYOUT DRAWING/2

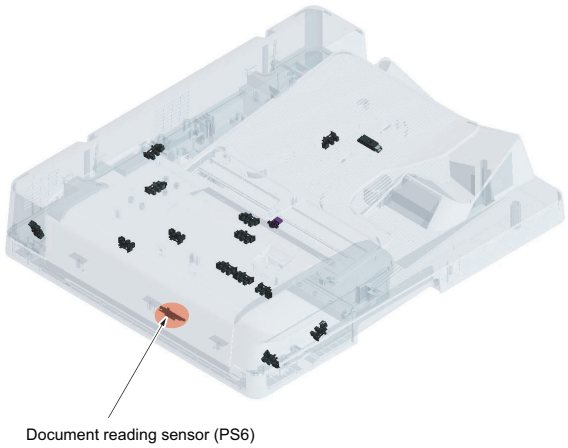


PARTS LAYOUT DRAWING/3

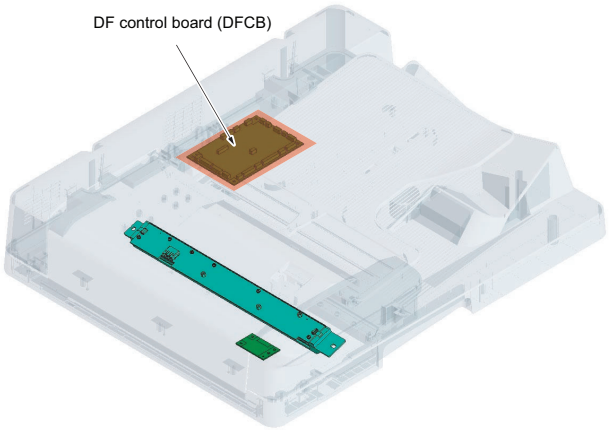


BOARD CONNECTOR LAYOUT DRAWING (DFCB)

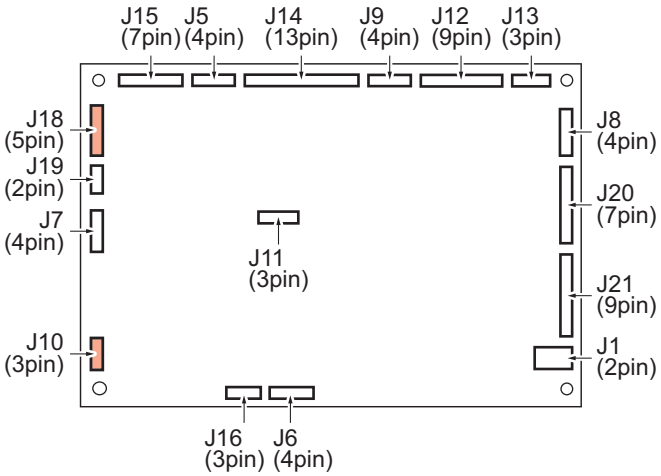


WIRING DIAGRAM

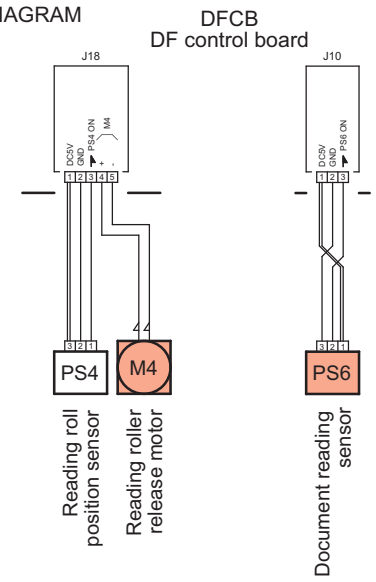

# 92. C8107

## 92.1 DF-629

PARTS LAYOUT DRAWING/1

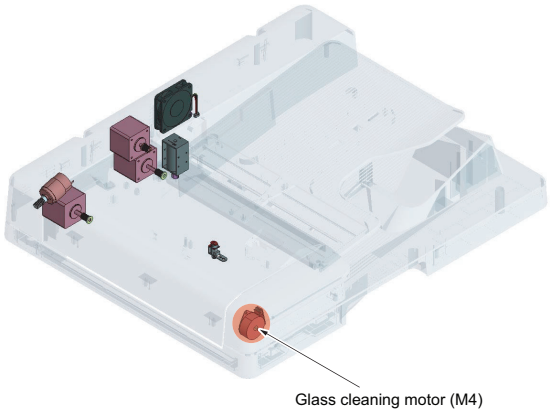


PARTS LAYOUT DRAWING/2

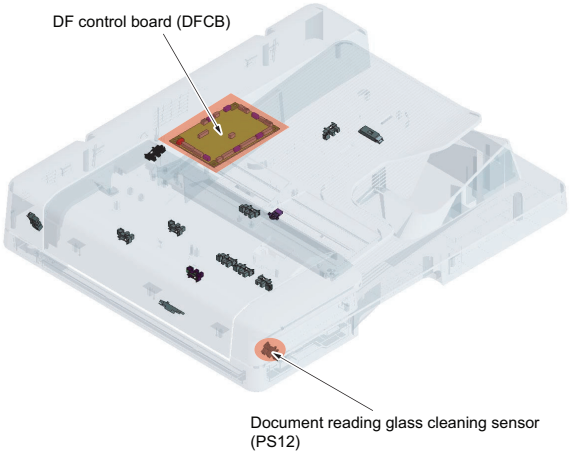


BOARD CONNECTOR LAYOUT DRAWING (DFCB)

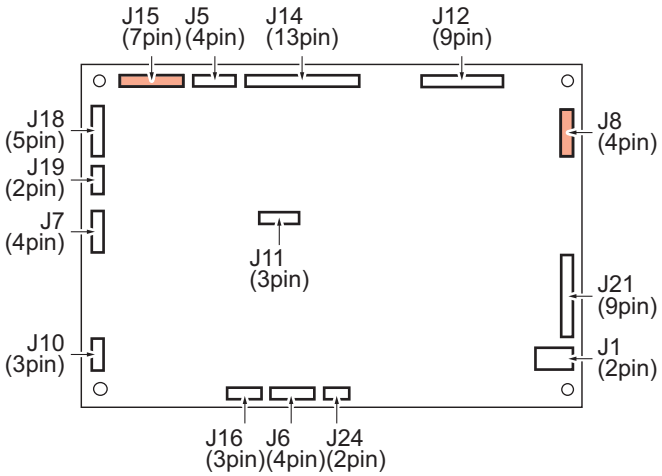


WIRING DIAGRAM

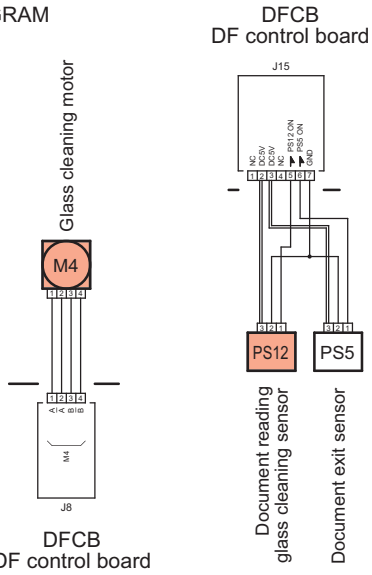

## 92.2 DF-704

PARTS LAYOUT DRAWING/1

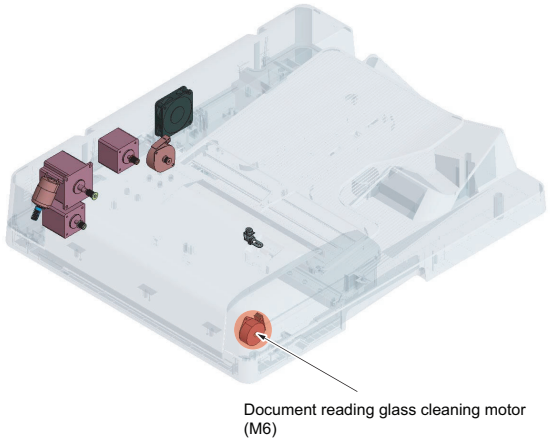


PARTS LAYOUT DRAWING/2

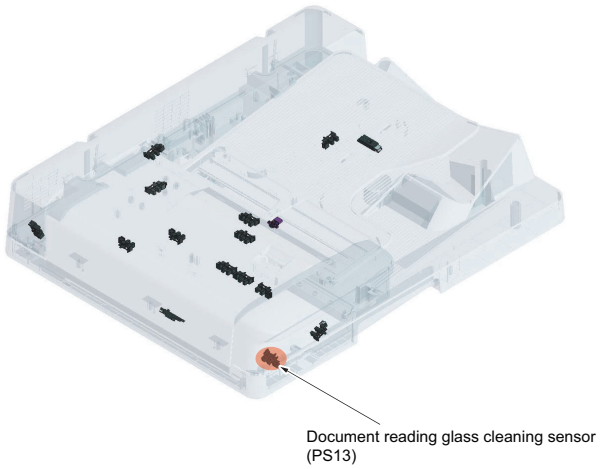


PARTS LAYOUT DRAWING/3

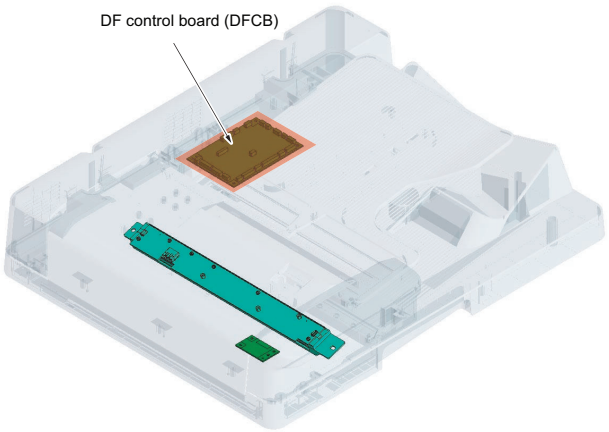


BOARD CONNECTOR LAYOUT DRAWING (DFCB)

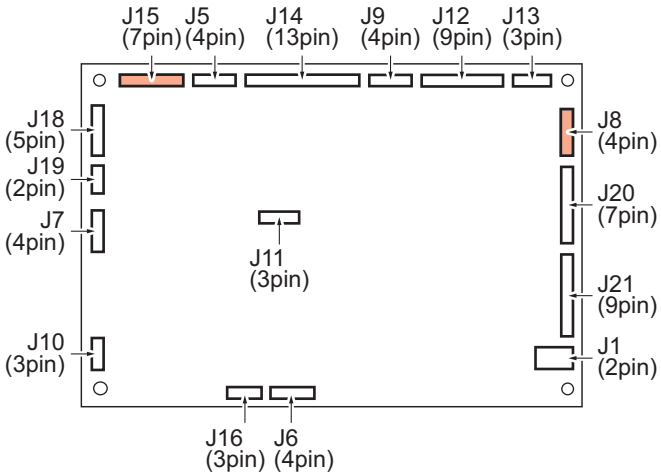


WIRING DIAGRAM

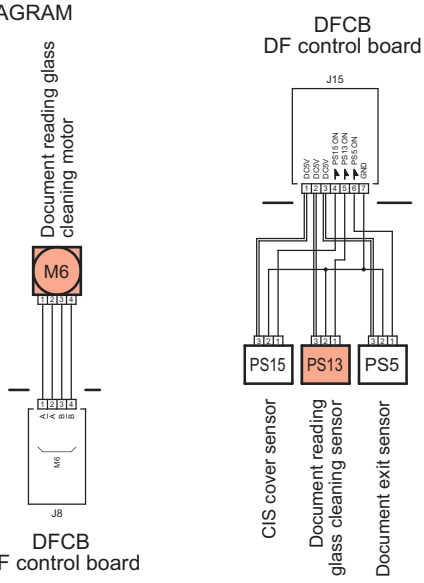

# 93. C8302

## 93.1 DF-629

PARTS LAYOUT DRAWING/1

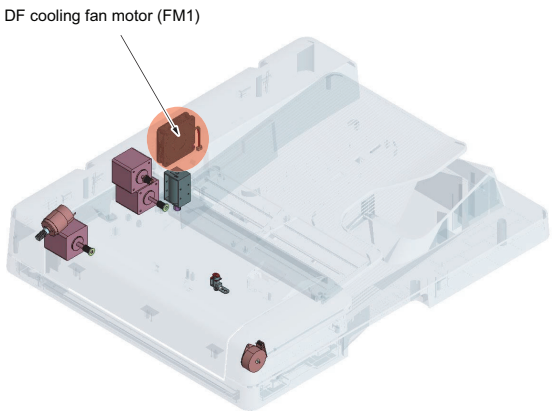


PARTS LAYOUT DRAWING/2

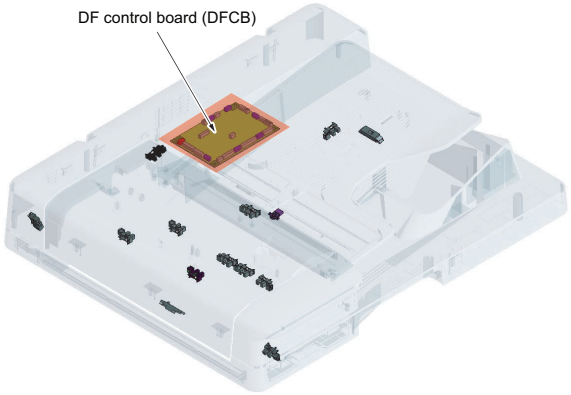


BOARD CONNECTOR LAYOUT DRAWING (DFCB)

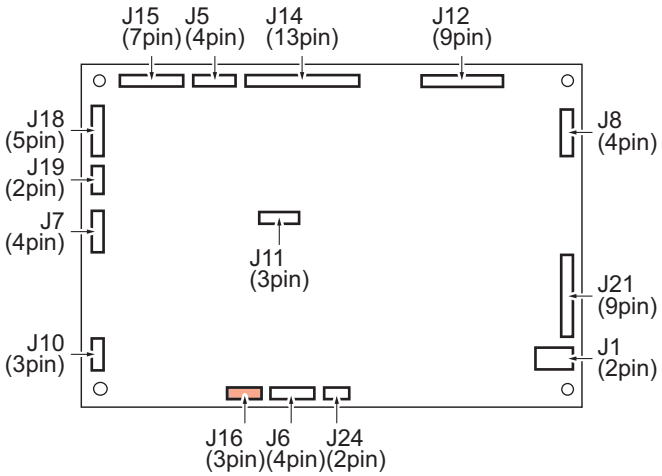


WIRING DIAGRAM

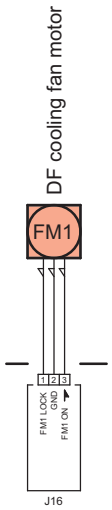


DFCB
DF control board

## 93.2 DF-704

PARTS LAYOUT DRAWING/1

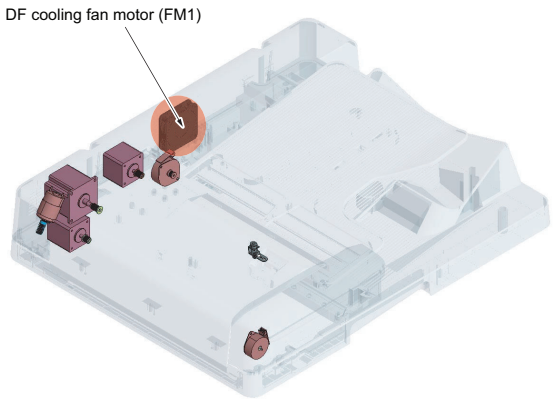


PARTS LAYOUT DRAWING/2

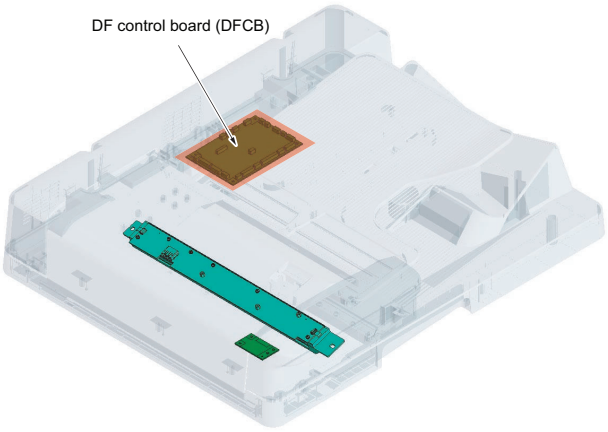


BOARD CONNECTOR LAYOUT DRAWING (DFCB)

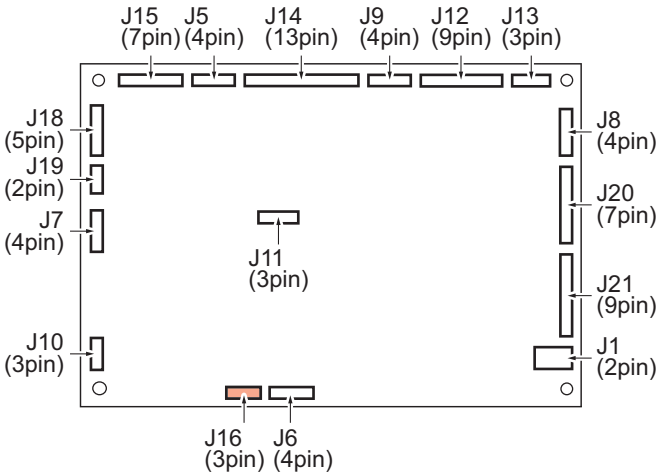


WIRING DIAGRAM

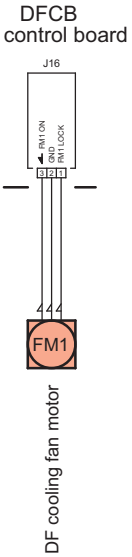

# 94. C8401, CC156

PARTS LAYOUT DRAWING/1 [DF-704]

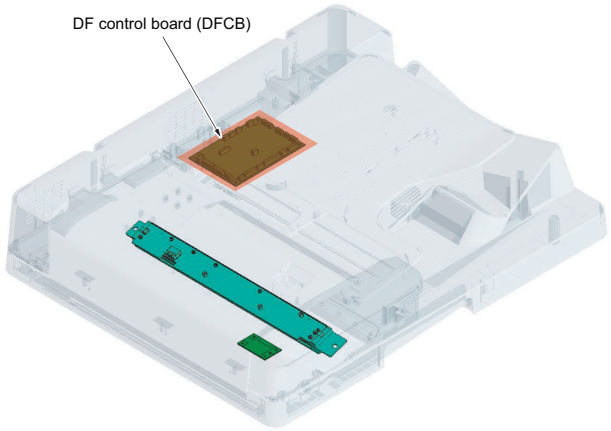


PARTS LAYOUT DRAWING/2 [DF-629]

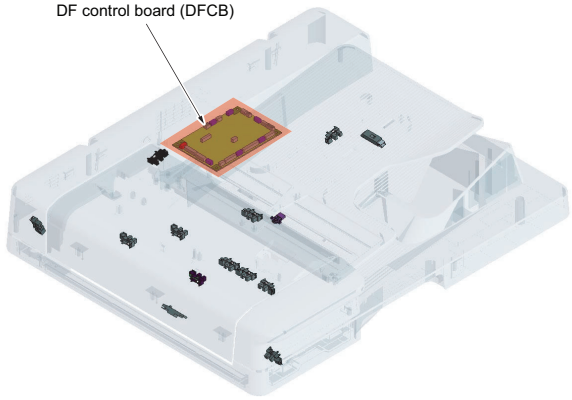

# 95. C9401, C9402

## PARTS LAYOUT DRAWING/1

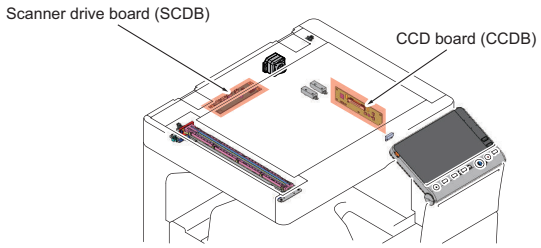


## PARTS LAYOUT DRAWING/2

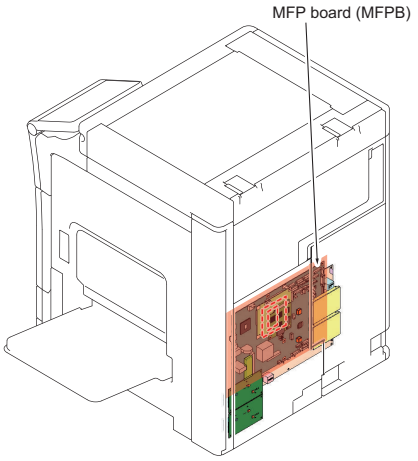


## BOARD CONNECTOR LAYOUT DRAWING (MFPB)

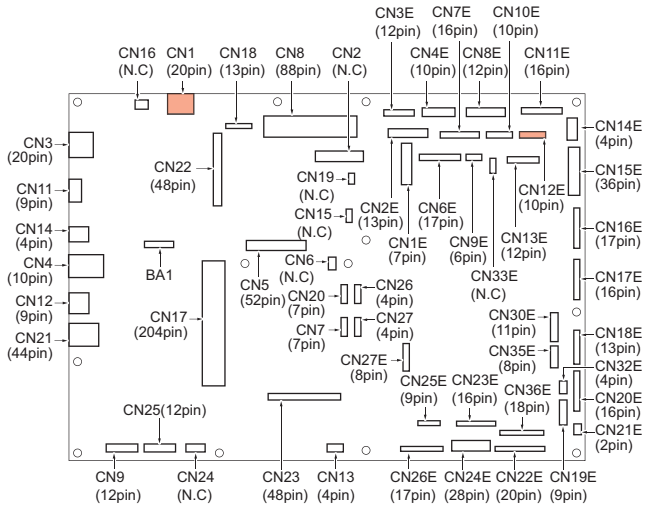


## BOARD CONNECTOR LAYOUT DRAWING (SCDB)

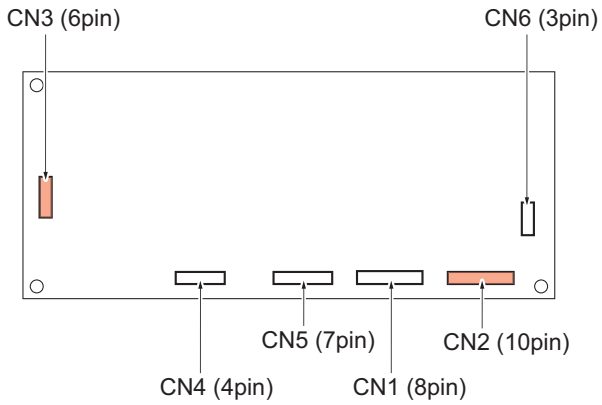


## WIRING DIAGRAM

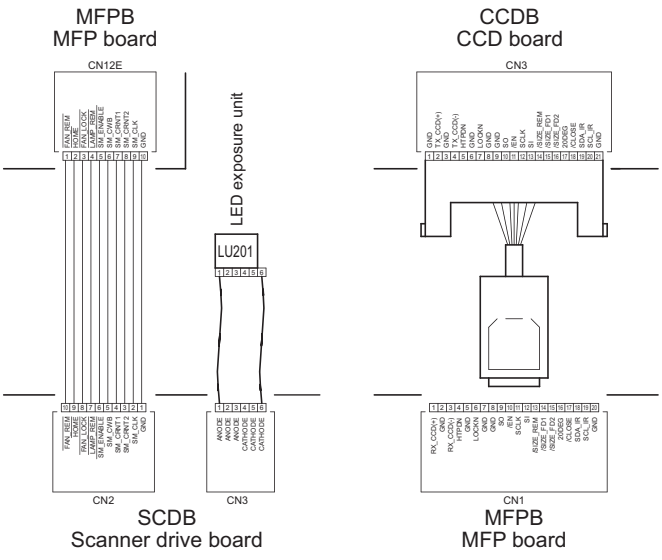

# 96. C9403, C9404

## PARTS LAYOUT DRAWING/1

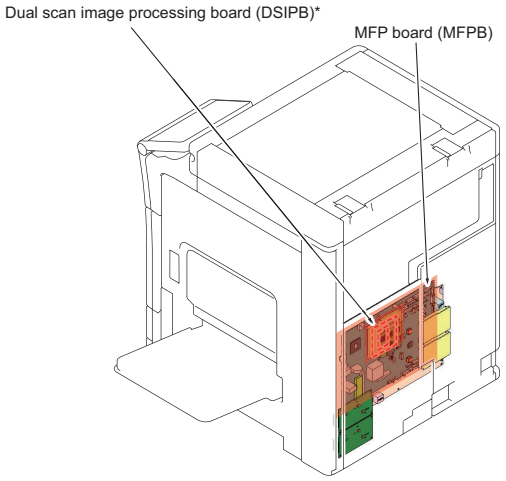


* : Option

## PARTS LAYOUT DRAWING/2

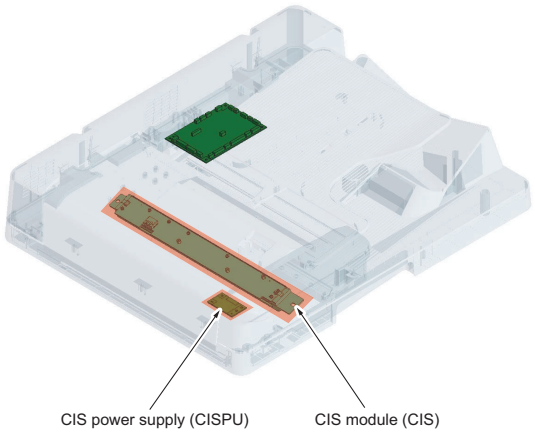


## BOARD CONNECTOR LAYOUT DRAWING (CISPU)

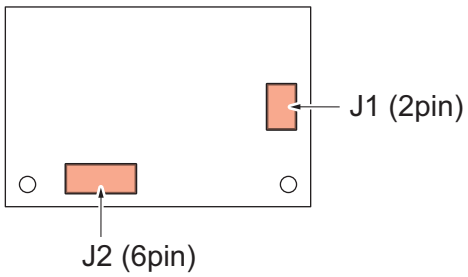


## WIRING DIAGRAM

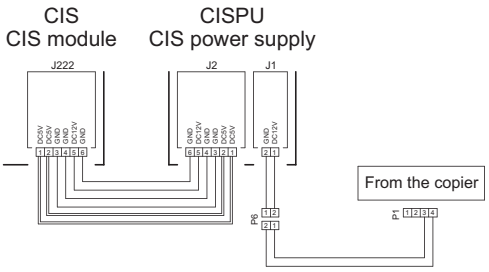

# 97. CC159, CC15A

PARTS LAYOUT DRAWING

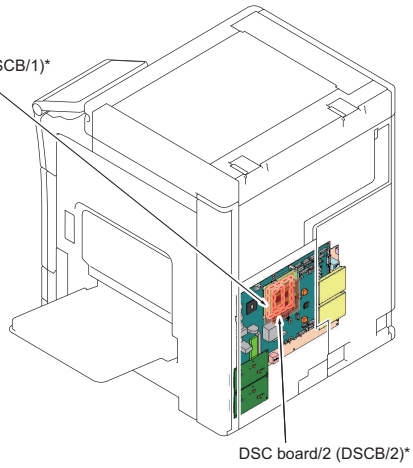


* : Option

# 98. CC15B

PARTS LAYOUT DRAWING

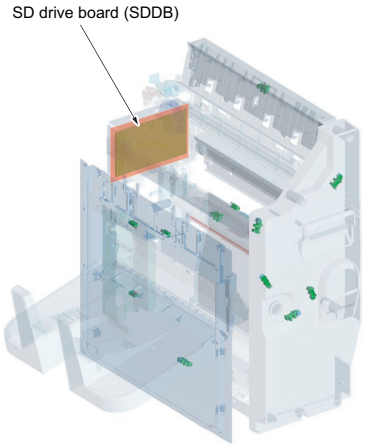

# 99. CC164, CD3A0

PARTS LAYOUT DRAWING

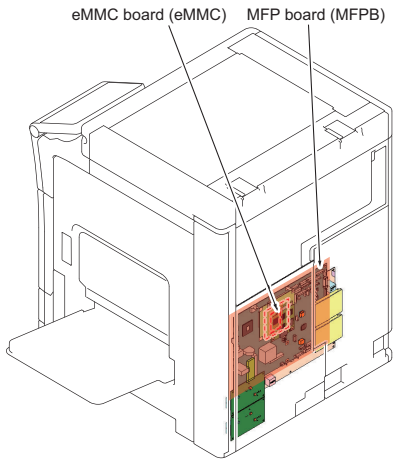

# 100. CC190, CD002, CD004, CD00F, CD020, CD050

## PARTS LAYOUT DRAWING

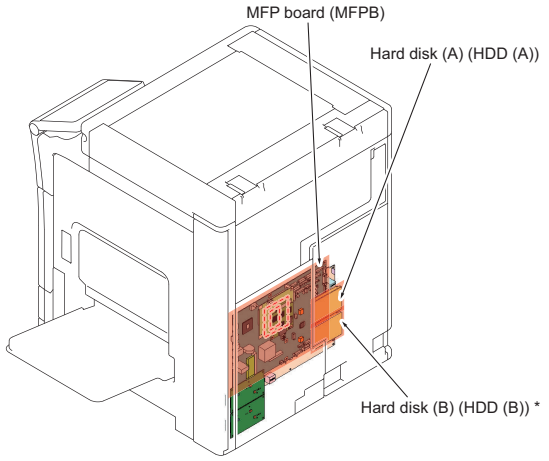


* : Option

## BOARD CONNECTOR LAYOUT DRAWING (MFPB)

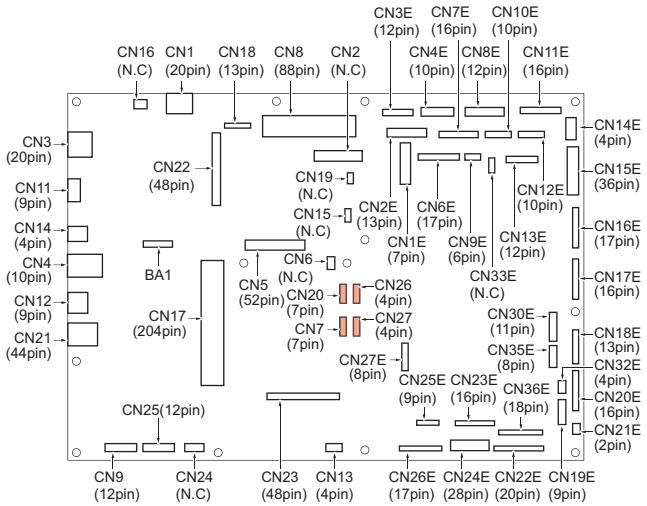


## WIRING DIAGRAM

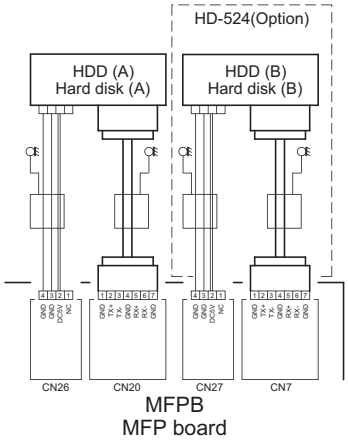

# 101. CD010, CE002

PARTS LAYOUT DRAWING

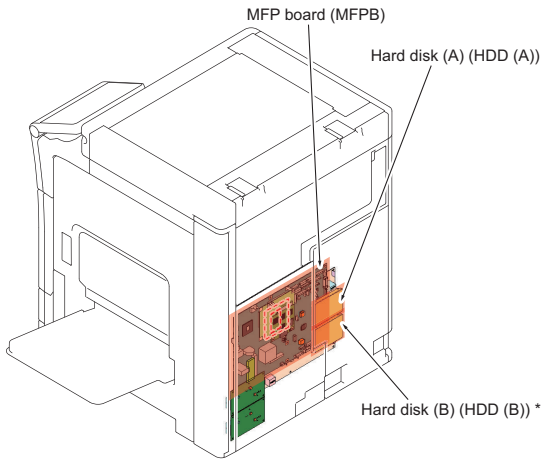


* : Option

# 102. CD011, CD012, CD013, CD014, CD015, CD016, CD017, CD030, CD041, CD042, CD043, CD044, CD045, CD046, CD047, CD048, CD049, CD04A, CD04B

PARTS LAYOUT DRAWING

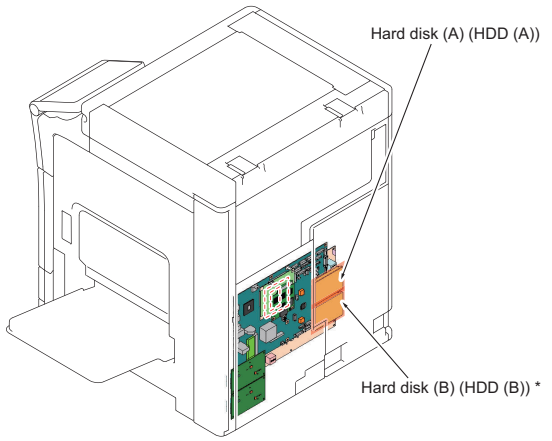


* : Option

# 103. CD201, CD202, CD203, CD271

PARTS LAYOUT DRAWING

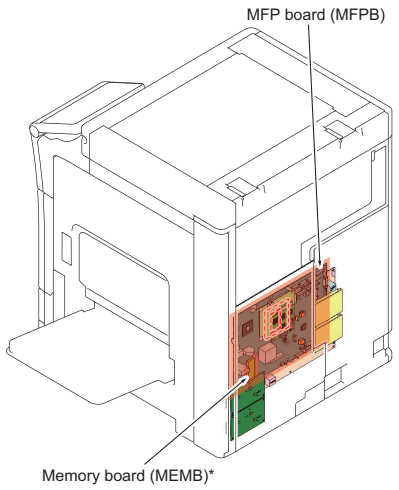


* : Option

# 104. CD272

PARTS LAYOUT DRAWING

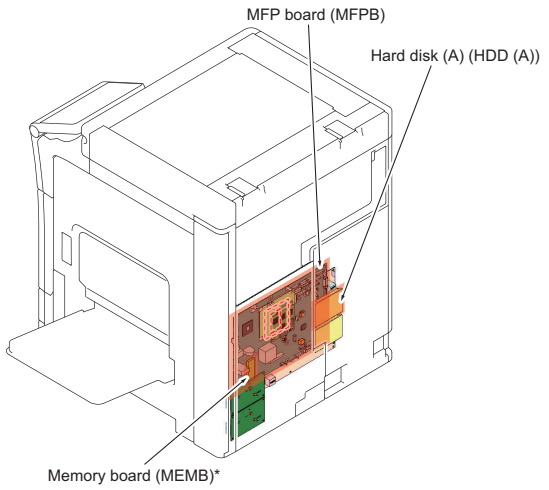


* : Option

# 105. CD392

PARTS LAYOUT DRAWING

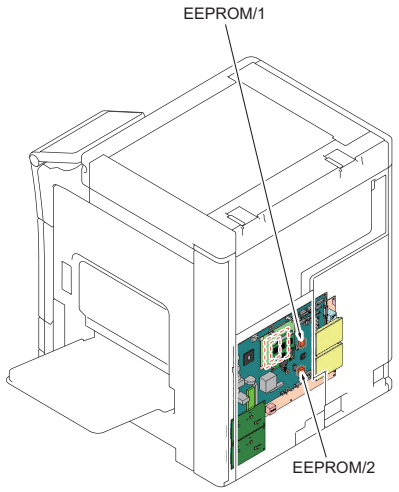

# 106. CDF51, CDF71, CDFA1

## PARTS LAYOUT DRAWING

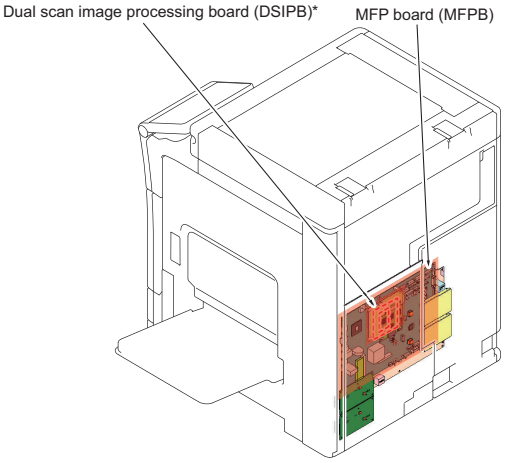


* : Option

## BOARD CONNECTOR LAYOUT DRAWING (MFPB)

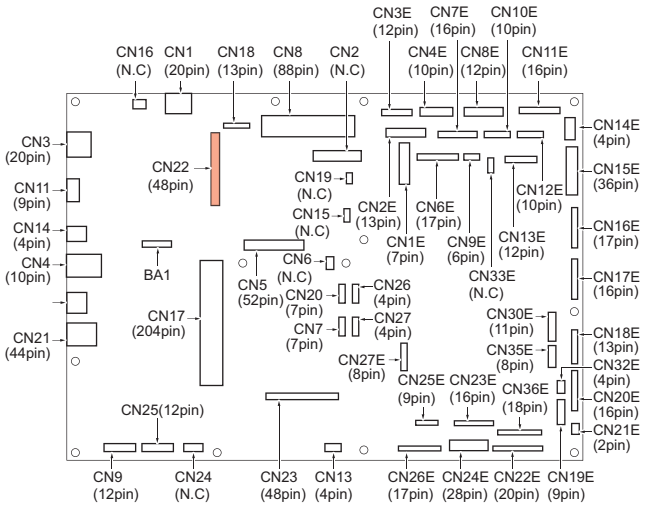


## BOARD CONNECTOR LAYOUT DRAWING (DSIPB)

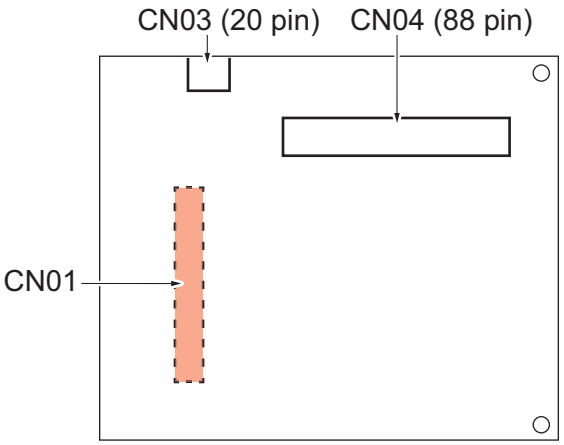


## WIRING DIAGRAM

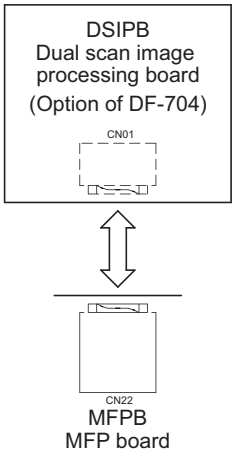

# 107. CED01

PARTS LAYOUT DRAWING

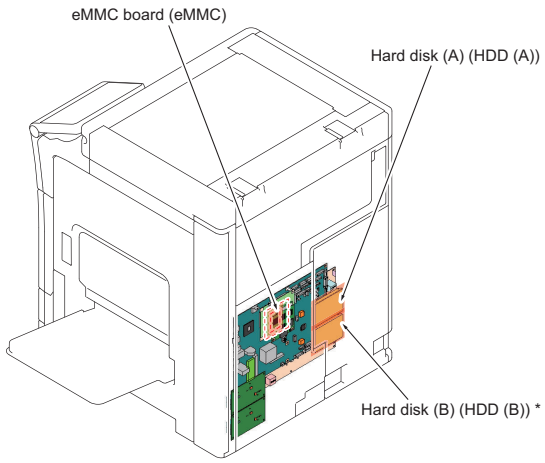


* : Option

# 108. CEEE2

PARTS LAYOUT DRAWING

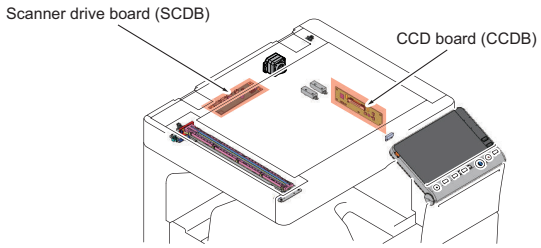




© 2015 KONICA MINOLTA, INC.

Use of this manual should be strictly supervised to avoid disclosure of confidential information.